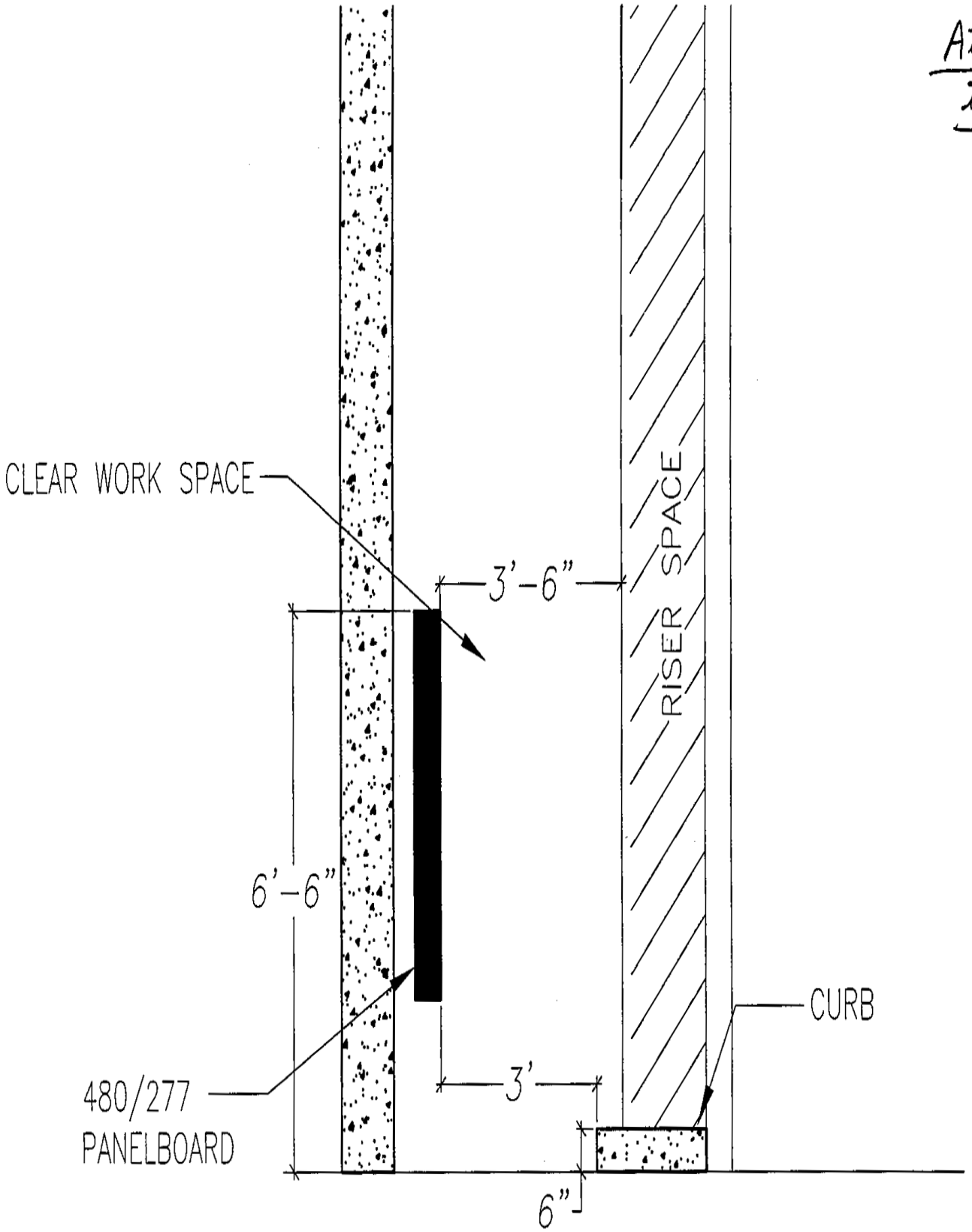Attachment to Q#2