Flushing Municipal Lot 3 RFP Addendum 1

RFP issue date: July 14, 2014
Addendum 1 issue date: August 15, 2014

Contents of the Addendum

A. Questions and Answers – Enclosed is a summary of questions and answers discussed at the pre-submission conference that took place August 6, 2014. Also included are questions and answers that were sent to the Flushing email address.

B. Contact Information – Contact Information is provided for those individuals who attended the pre-submission conference and indicated that they are willing to share their contact information.

C. LIRR Existing Platform Drawings – The existing drawings may be used as a reference only. The designated Development team shall be responsible to check and verify all dimensions and job conditions in the field. Should s/he require further clarification, the Developer may contact the LIRR's Engineering Department for coordination ***upon award.***

A. Questions and Answers – Enclosed is a summary of questions and answers discussed at the pre-submission conference that took place August 6, 2014. Also included are questions and answers that were sent to the Flushing email address.

A. Questions and Answers

Residential Program

Q1: Can a component of the development be supportive housing?
A1: Yes, HPD is open to reviewing proposals that include a component of supportive housing.

Q2: How important is the senior housing component of this RFP?
A2: The inclusion of senior housing is not a requirement of the RFP. Preference will be given to feasible proposals that include a senior housing component. The community identified a need for senior housing.

Q3: Will HPD consider proposals that include market rate units?
A3: Proposals must have mixed-income and affordable housing units.

Finance

Q4: Which sources of financing are considered non-competitive? Are there any competitive sources that are allowed for this RFP? Are State tax credits considered competitive?
A4: Proposals must include a primary financing scenario that does not propose competitive financing sources, including HCR (State) and HPD 9% Low Income Housing Tax Credits. As-of-right 4% tax credits and HDC tax-exempt bonds are not considered competitive sources.

Q5: Is HPD capital subsidy considered a competitive source?
A5: No, HPD capital subsidy is considered a non-competitive source.

Q6: The mayor has talked about changing the terms of housing subsidy and financing programs. Will that impact what is expected for the financing tab in submission?
A6: Please use the term sheets that are available at the time of submission.

Q7: What financing programs are available for senior housing? Will Section 8 vouchers be available to use as rental subsidy for senior housing?
A7: There are no senior housing financing programs. Section 8 vouchers will not be made available for use as rental subsidy for senior housing.

Environmental

Q8: Is sub-surface information available, particularly on the water table?
A8: HPD followed up with the Department of Transportation and Long Island Rail Road and was not able to identify sub-surface information.

Q9: Are there any additional design criteria related to environmental issues?
A9: The selected Developer will be responsible for preparing and submitting an Environmental Assessment Statement (EAS) in accordance with the guidelines contained in the latest edition of the City Environmental Quality Review (CEQR) Technical Manual. The Developer will be responsible for retaining a reputable environmental consultant, preparing and submitting all CEQR documents, and funding the cost of the studies and analysis required for completion of CEQR. Due to the proximity of the Long Island Rail Road and the site's location within the LGA flight path, the selected environmental consultant should have expertise in acoustical studies and extensive familiarity with CEQR and HUD noise assessment methodologies. The Developer will be solely responsible for any mitigation measures identified as a result of the CEQR review.

Q10: Are there any issues with building next to power lines?
A10: At this time, we are not aware of any issues with building next to power lines.

Site Survey

Q11: Was a survey conducted on the site, and if not, is HPD planning to conduct a survey?
A11: HPD does not conduct surveys for its RFPs. Please see Part C of Addendum 1 for LIRR drawings.

LIRR

Q12: Have there been, or will there be, any preliminary environmental investigations involving the sub-station?
A12: The proposed building cannot be within 10 feet of the sub-station. No other environmental investigation was conducted and HPD does not foresee an additional investigation.

Q13: Does the 10 foot buffer extend below ground as well?
A13: Yes, the 10 foot buffer for the LIRR sub-station extends below ground.

Q14: Is there any flexibility in the 10 foot right of way for the LIRR?
A14: The development must be 10 feet from the substation, which is located to the west of the Site. The proposed development must comply with all requirements relevant to the railroad right-of-way.

Q15: Is there additional information on sections of the LIRR?
A15: See Part C of Addendum 1.

Q16: Has HPD had a discussion with the MTA about work rules?
A16: See Appendix E of the RFP.

Q17: Does LIRR have a survey of the site?
A17: See Part C of Addendum 1.

Q18: Can you provide us with an allowance for LIRR costs so that this is a consistent assumption across the proposals?
A18: The financial analysis should factor in the rules and regulations of building adjacent to the Long Island Rail Road and its impact on the development costs. The plans provided by the LIRR should be utilized in this determination (See Part C of Addendum 1 and Appendix E of the RFP).

Commercial/Community Facility Use

Q19: Could you clarify the business attraction and retention strategy described in the RFP?
A19: For mixed-use developments, HPD wants to ensure that the retail on the ground floor does not become and remain vacant. Development teams should provide a narrative describing how they will attract and retain businesses.

Q20: Has there been community input that indicates a preference for the commercial space?
A20: There is no specific preference for commercial uses on the site. Generally, the community spoke about a combination of retail and community space on the ground floor. See Appendix C for Community Input.

Q21: Are there any specifics regarding the use of community facility space in the development?
A21: There are no expected tenants for the community space. Any community partnerships should be described in the RFP submission.

Zoning/Parking

Q22: What is the FAR associated with R7X zoning?
A22: The FAR in an R7X district is 5.0.

Q23: Is the rezoning of the lot final? Will HPD consider other zoning districts?
A23: HPD has worked closely with the Department of City Planning and determined that R7X is the most suitable zoning district for the Site. There are certain factors, like the LaGuardia flight path, that restrict zoning possibilities for this area. Proposals should assume that the lot will be rezoned to an R7X.

Q24: Could you clarify any replacement parking requirements for the RFP?
A24: In addition to the parking spaces required per zoning, Proposals should address the 156 parking spaces that currently exist on the Site with a feasible plan for replacement.

Q25: Is the 156 parking spaces in addition to what is required by zoning?
A25: Yes, see answer to the question above.

Q26: Are you expecting residential parking requirement to be waived during ULURP?
A26: Parking must comply with the New York City Zoning Resolution.

Q27: Will replacement parking be turned back over to the Department of Transportation?
A27: No, the replacement parking will not be turned back over to the Department of Transportation.

Q28: If the parking can be accommodated on another site in Flushing, would HPD consider that for this project?
A28: HPD will consider offsite parking in proposals.

Q29: Are there restrictions on the parking rates?
A29: There are no restrictions on parking rates in the RFP. However, it is a community concern that the parking spaces remain affordable.

Q30: Is there any flexibility in the parking requirements?
A30: Any modifications to the parking requirement may require public review during the land use review process.

Q31: Will replacement parking during construction be required? Will providing replacement parking be the responsibility of developers or HPD?
A31: HPD is concerned about the provision of replacement parking during construction, and so far has not been able to identify a suitable location. We encourage any suggestions related to replacement parking. Providing replacement parking will be the responsibility of the selected development team, but HPD will work with the selected development team, community, and elected officials on this issue.

Q32: How did the community respond to the loss of public parking associated with this project?
A32: The community has expressed concern about the loss of public parking, which is why the RFP includes a preference for a feasible replacement parking plan.

RFP Process

Q33: Will answers to questions be released on a rolling basis?
A33: HPD will wait to receive a substantial number of questions before sending out an addendum.

B. Contact Information – Contact Information is provided for those individuals who attended the pre-submission conference and indicated that they are willing to share their contact information.

Sign-In Sheet/RSVP List
Flushing Muni Lot 3 RFP Pre-Submission Conference

Last Name	First Name	Organization	Email	Phone	Initial	Check to share your contact information	Additional Information
Bafitis	Peter	RKTB Architects	pbafitis@rktb.com			X	
Briggs	David	LOCI Architecture	dbriggs@lociarchitecture.com	212-226-2228		X	
Brito	Alex	RKTB Architects	abrito@rktb.com			X	
Brown	Ira	The Briarwood Organization	ibrown@briarwoodorg.com	718-229-4300		X	
Chan	Raymond	Global Vision Development LLC	admin@raymondchanarchitect.com	718-445-2345		X	
Chan	Nelson	Affiliate of Asian Americans for Equality	nelson_chan@aafe.org	212-979-8381 x 121		X	
Ciampa	Joseph	Ciampa Organization	josephciampa@yahoo.com	718-939-4888		X	
Cleghorn	David	HELP USA	dcleghorn@helpusa.org	646-300-1357		X	
Fields	Michael	New York Community Bank	michael.fields@mynycb.com	516-683-4506		X	
Foley	Andrew	Denham Wolf Real Estate	afoley@denhamwolf.com	212-736-6777		X	
Gil	Carmen		carmendgil@yahoo.com	103-488-5038		X	
Gippetti	Richard	NYC DOT	rgippetti@dot.nyc.gov	212-839-2513		X	
Govier	Sarah	Habitat for Humanity - NYC	sgovier@habitatnyc.org	212-991-4000 x 332		X	
Hartray	Guido	Marvel	ghartray@marvelarchitects.com	212-941-6718		X	
Hoffman	Aaron	SUS, Inc.	ahoffman@sus.org	917-408-1638		X	
Jobe	Olga	Habitat for Humanity - NYC	ojobe@habitatnyc.org	212-991-4000 x 328		X	
Kackmann	Ellen	Comunilife	ekackmann@comunilife.org	212-219-1618		X	
Karoff	Lorinda	Karoff Consulting	lkaroff@karoffconsulting.com	646-436-3696		X	
Kendzia	Carolyn	Radson Development	carolyn@rad-son.com	917-565-7666		X	
Knepper	Sydelle	SKA Marin	sknepper@skamarin.com	516-466-9581		X	
Knox	Andrew	ESKW/Architects	aknox@edelmansultan.com	212-431-4901		X	
Kokinakis	Emanuel	Mega Contracting	ekokinakis@megacontractinginc.com	718-932-6342		X	
Kraus	Ben	Langan Engineering	bkrause@langan.com			X	
Lang	Russell	Douglaston	rlang@ddny.com	212-991-4548		X	
Lichtiger	Ira	The Bluestone Organization	ira.lichtiger@bluestoneorg.com	347-572-6302		X	
Louloudis	Nicki	Langan Engineering	nlouloudis@langan.com			X	

Sign-In Sheet/RSVP List
Flushing Muni Lot 3 RFP Pre-Submission Conference

Last Name	First Name	Organization	Email	Phone	Initial	Check to share your contact information	Additional Information
MacLaury	Doug	The Mattone Group	dmaclaury@mattonegroup.com	218-353-5500		X	
Mehta	Parag	PM Architecture	pmehta@pmarchitecture.com	212-563-2550		X	
Meyer	Michael	F + T	michael.meyer@faudtgroup.com	718-713-0268		X	
Mitchneck	Ira	Dattner Architects	imitchneck@dattner.com			X	
Mortlock	Yvenne		queenbella1960@verizon.net	646-283-0449		X	
Oriwol	Tobias	Monadnock Development	toriwol@moncon.com	718-576-3662		X	
Piscopia	Anthony	HAKS	apiscopia@haks.net	212-747-1997 x 807		X	
Randolph	Marcus	The Community Builders	mrandolph@TCBINC.org	646-822-1286		X	
Richardson	Virginia	Montroy, Anderson, Demarco	vrichardson@madgi.com	212-600-9326		X	
Riso	Vincent	The Briarwood Organization	vriso@briarwoodorg.com	718-229-4300		X	
Riso	James	The Briarwood Organization	jriso@briarwoodorg.com	718-229-4300		X	
Rodriguez	Miriam	Innovative Property Management	ipmdevelopment@aol.com	718-552-2895		X	
Sengstacken	Amanda	ESKW/Architects	asengstacken@edelmansultan.com	212-431-4901		X	
Silverman	Ronnie	HELP USA	rsilverman@helpusa.org	212-400-7032		X	
Stein	William	Dattner Architects	wstein@dattner.com			X	
Tserpelis	Callie	HANAC	ctserpelis@hanac.org	212-840-8005 x 101		X	
Velasquez	Edwin	Bronx Pro Real Estate	evelasquez@bronxprogroup.com	718-294-5840		X	
Warren	Bernard	Webb and Brooker	bwarren@webb-brooker.com	212-926-7100		X	
Warshavsky	Lee	Settlement Housing Fund	lwarshavsky@shfinc.org	212-265-6530		X	
Wolff	Evelyn	Selfhelp	ewolff@selfhelp.net	212-971-7710		X	
Wong	Ronald	The Community Builders	rwong@tcbinc.org	617-388-4061		X	
Wright	Susan	IBI Group - Gruten Sampton	susan.wright@ibigroup.com			X	
Yu	Raymond	YUCO	raymond.yu@yucoinc.com	212-994-2200		X	

C. LIRR Existing Platform Drawings – The existing drawings may be used as a reference only. The designated Development Team shall be responsible for checking and verifying all dimensions and job conditions in the field. Should s/he require further clarification, the Developer may contact the LIRR's Engineering Department for coordination ***upon award.***

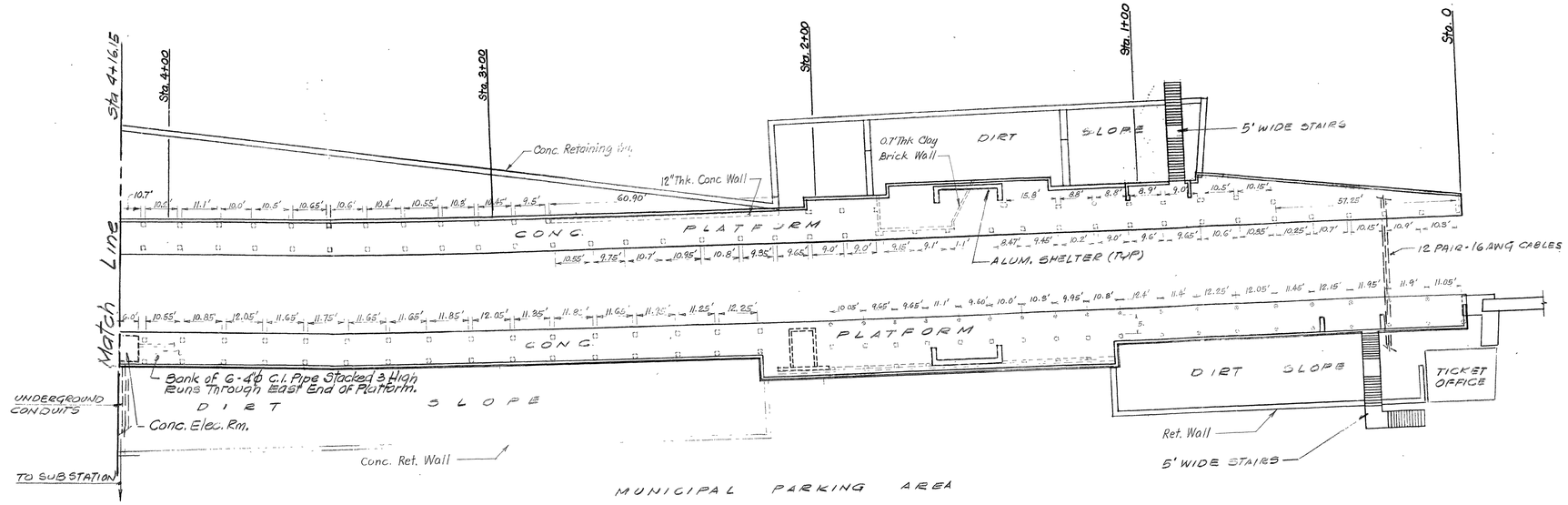

PLAN

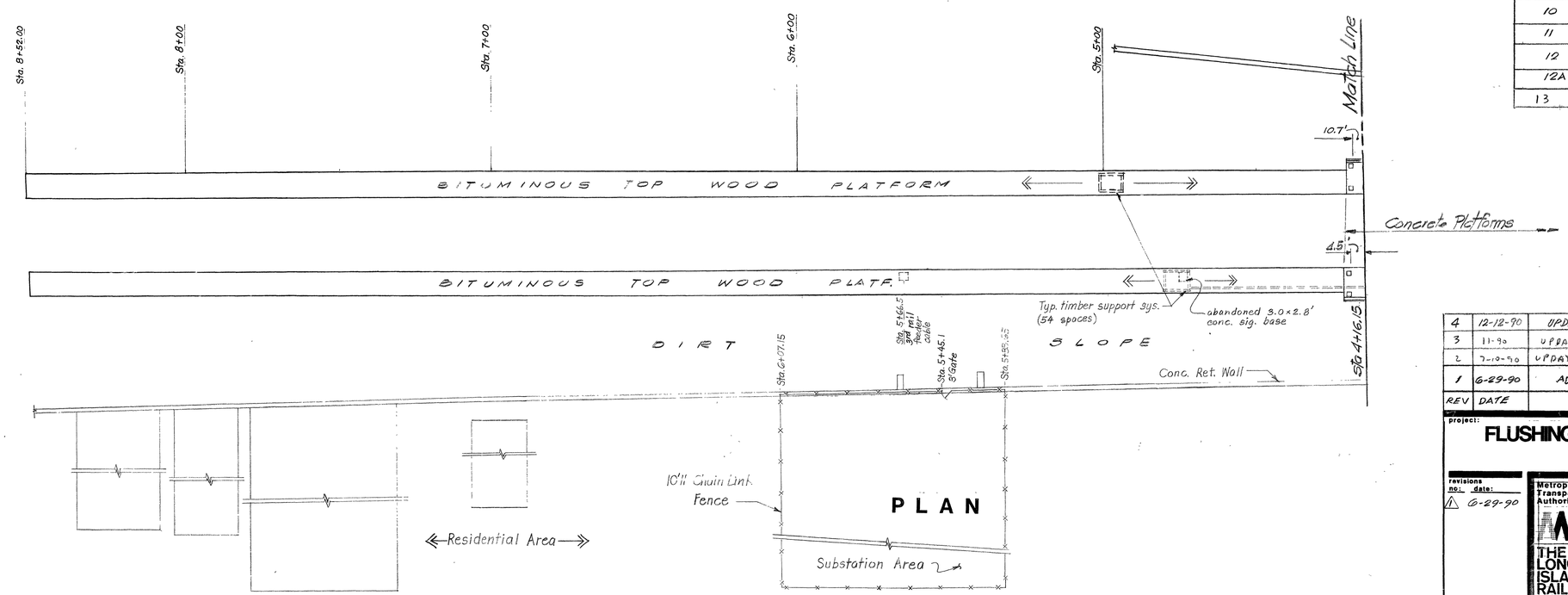

LIST OF DRAWINGS

DWG. Nº	TITLE	REV.	DATE
1	EXISTING CONDITION PLAN	4	12-12-90
2	DEMOLITION PLAN	1	6-29-90
3	HIGH LEVEL PLATFORM SLAB LAYOUT PLAN	5	6-29-90
3A	SOUTH PLATFORM PART. PLAN & CROSS SECTIONS	2	11-90
3B	SOUTH PLATFORM SECTIONS	1	6-29-90
3C	REFERENCE ONLY		2-90
–	SHEETS 4, 5, 5A, 5B, 6, 7 & 8 ARE VOID	–	–
9	SECTIONS & DETAILS	4	7-10-90
10	STAIR DETAILS NORTH PLATFORM	2	1-22-90
11	VOID	–	–
12	SOUTH STAIR PLAN EXISTING & PROPOSED	2	11-90
12A	SOUTH STAIR DETAILS	2	11-90
13	DOUBLEWALL NORTH & SOUTH PLATFORM	1	12-12-90

6 90

REV	DATE	DESCRIPTION	BY	CHECKED
4	12-12-90	UPDATED LIST OF DWGS.	M.V.	L.M.
3	11-90	UPDATED LIST OF DWGS	JS	LM
2	7-10-90	UPDATED LISTING OF DWGS	JS	LM
1	6-29-90	ADDED LIST OF DRAWINGS	ALV.	J.S./L.M.

project:

FLUSHING MAIN ST PLATFORM REPLACEMENT

(LINE IMPROVEMENTS)

revisions no. date: 6-29-90

Metropolitan Transportation Authority
THE LONG ISLAND RAIL ROAD
Office of the Chief Engineer
Jamaica N.Y. 11435
212-526-0900

drawing title: EXISTING CONDITIONS PLAN

designed by: CMJ | drawn by: RD | drawing no: 50705

checked by: | scale: 1"=20' | sheet no:

in charge: MSL | date: 6 | 1 of:

branch: PORT WASHINGTON

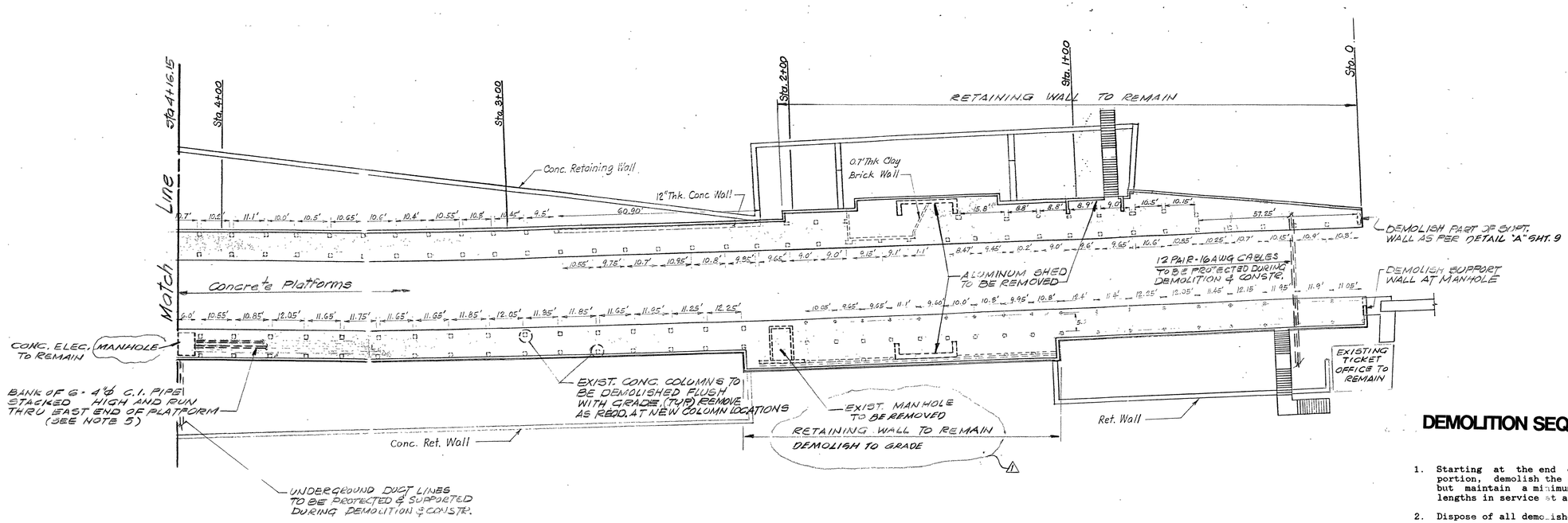

PLAN

DEMOLITION SEQUENCE

1. Starting at the end of the black-top portion, demolish the eastbound platform but maintain a minimum of four (4) car lengths in service at all times.
2. Dispose of all demolished materials.
3. (a) Demolish the remainder of the platform.
   (b) Cut the existing reinforced concrete columns.
4. Follow procedures 1, 2, and 3 for the westbound platform.
5. Support all utilities presently suspended from the existing platform prior to demolition work.
6. A temporary access stairs to the platform shall be provided as shown on Drawing 50705, Sheet 3.

(FOR RELOCATION OF UTILITIES REFER TO ELEC. DWGS.)

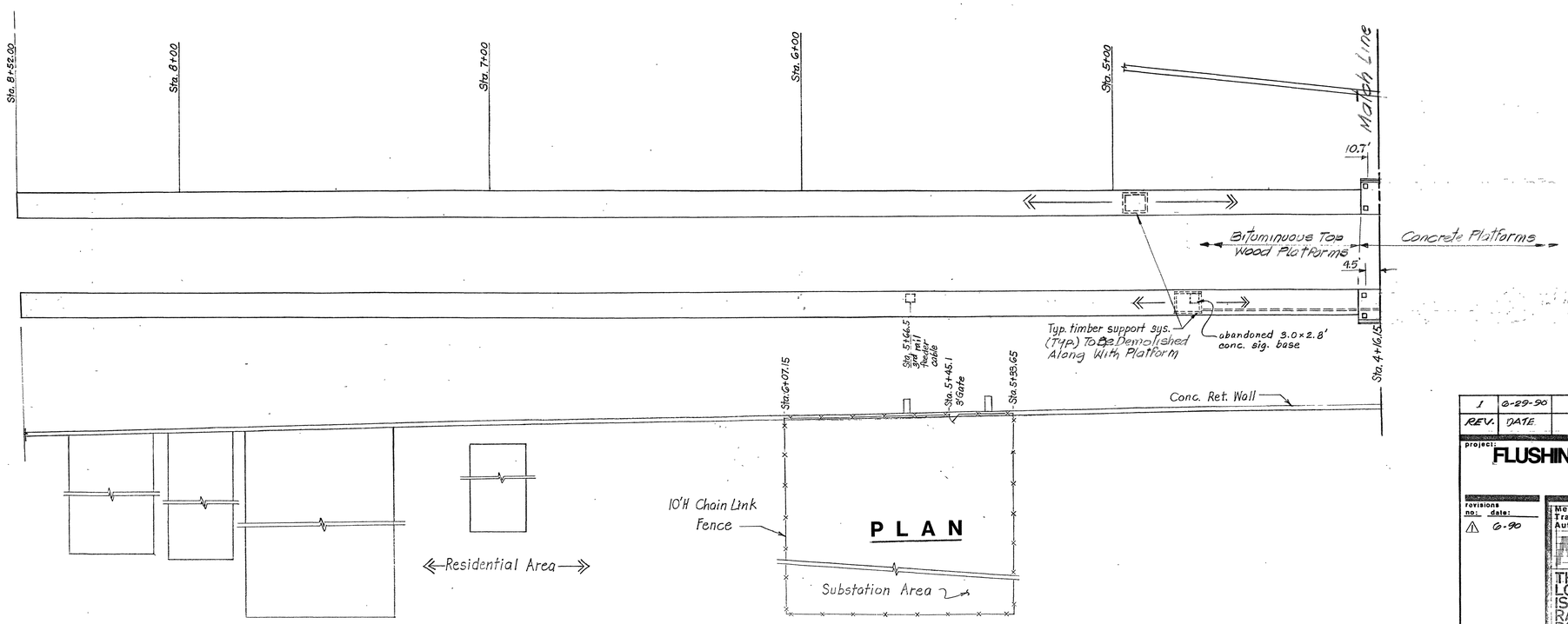

PLAN

6/29/90

REV.	DATE	DESCRIPTION	BY	CHECKED
1	6-29-90	MISCELLANEOUS REV.	ALV.	J.G./L.M.

project: **FLUSHING MAIN ST PLATFORM REPLACEMENT**
(LINE IMPROVEMENTS)

revisions no: 1 date: 6-90

Metropolitan Transportation Authority
THE LONG ISLAND RAIL ROAD
Office of the Chief Engineer
Jamaica N.Y. 11435
212-526-6900

drawing title: **DEMOLITION PLAN**

designed by: CMJ | drawn by: RD | drawing no: 50705
checked by: | scale: 1" = 20' | sheet no: 2
in charge: MSL | date: 6-30-87
branch: PORT WASHINGTON | of:

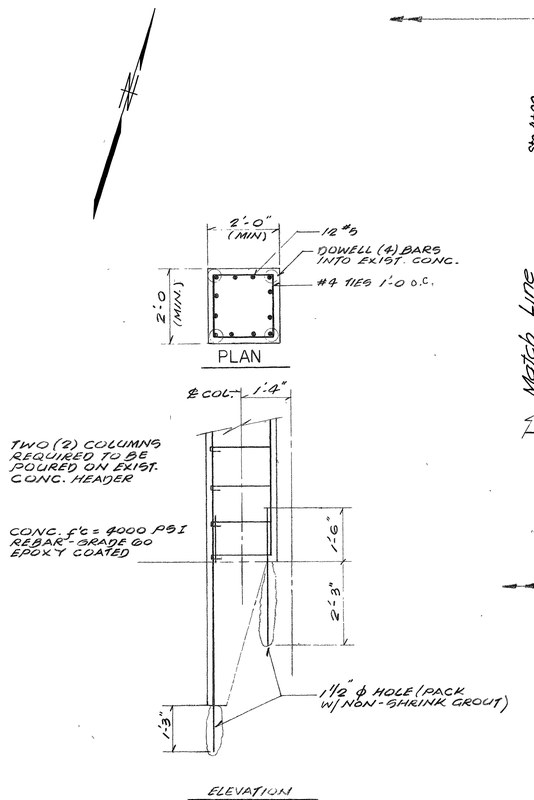

DETAIL 100

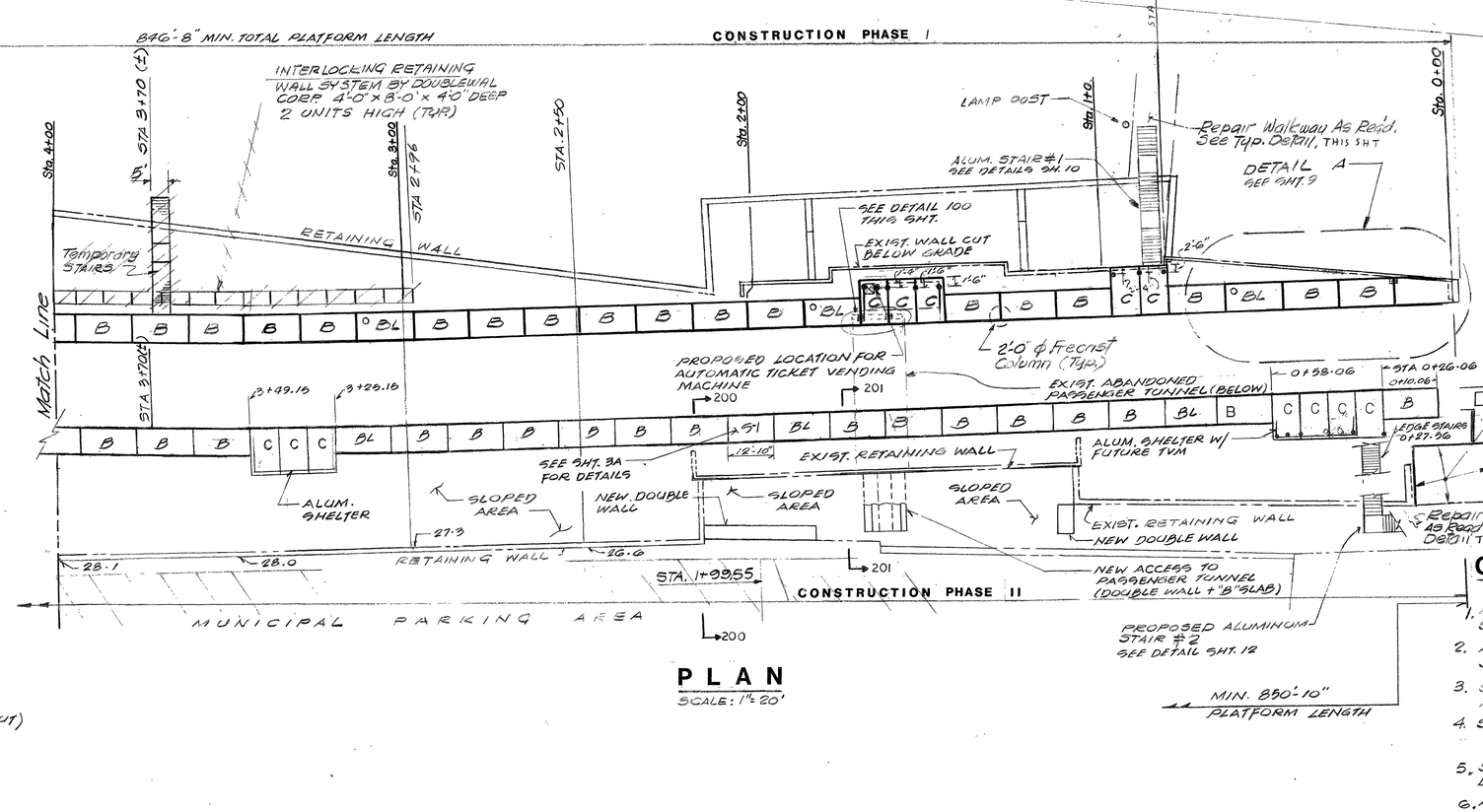

PLAN
SCALE: 1" = 20'

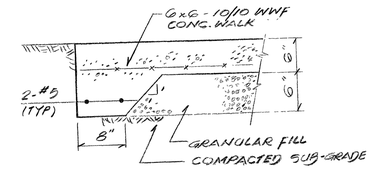

TYPICAL WALKWAY REPAIR DETAIL
SCALE: 1" = 1'-0"

GENERAL NOTES

1. ALL PRECAST CONCRETE SLAB/COLUMNS SHALL BE IN ACCORDANCE WITH DWG 50457
2. ALL COLUMNS TO BEAR ON UNDISTURBED SOIL, UNLESS WHERE OTHERWISE NOTED
3. SEE DWG. 50568a, DATED 6/27/86 FOR ALUMINUM SHELTER SHED.
4. SEE DWG NO. 10 FOR ALUMINUM STAIRS DETAIL
5. SEE DWG 50468 FOR PLATFORM RAILING DETAILS.
6. ALL NOTES IN THE ABOVE MENTIONED DRAWINGS SHALL BE ADOPTED WHERE APPLICABLE.
8. DOUBLEWAL MANUFACTURER TO SUBMIT FULL SET OF SHOP DRAWINGS FOR APPROVAL BEFORE FABRICATION.
9. FOR DETAIL OF 25' LAMP POST BASE SEE DWG 50457 SHT. P1-C
10. PROVIDE TIMBER EARTH SUPPORT SYSTEM AS NECESSARY DURING ERECTION OF DOUBLEWALL
11. SOUTH PLATFORM TO CONFORM TO CE-1 NORTH PLATFORM TO CONFORM TO APPLICABLE STANDARDS.

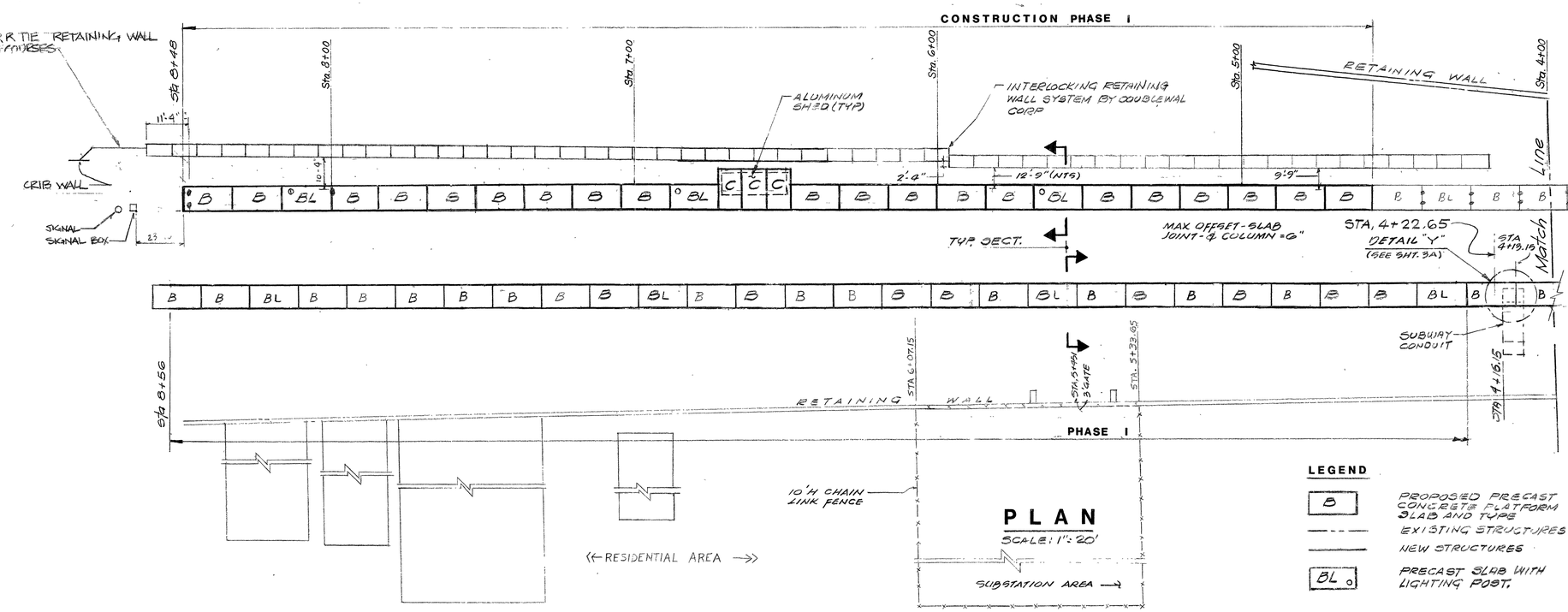

NORTH PLATF. ONLY
6 29 90

LEGEND

- B — PROPOSED PRECAST CONCRETE PLATFORM SLAB AND TYPE
- EXISTING STRUCTURES
- NEW STRUCTURES
- BL ○ — PRECAST SLAB WITH LIGHTING POST.

REV.	DATE	DESCRIPTION	BY	CHECKED
5	6-29-90	MISCELLANEOUS REV.	ALV.	J.S./L.M.
4	2-14-90	REV. SOUTH PLATFORM		J.S.
3	1-22-90	REVISED TO SHOW NORTH PLATFORM AS-BUILT, ADDED DETAIL 100		J.S.

project:
FLUSHING MAIN ST PLATFORM REPLACEMENT
(LINE IMPROVEMENTS)

revisions no: date:
1 12-7-87
2 8-25-89
3 1-22-90
4 2-5-90
5 6-90

Metropolitan Transportation Authority
THE LONG ISLAND RAIL ROAD
Office of the Chief Engineer
Jamaica, N.Y. 11435
212-526-3000

drawing title: HIGH LEVEL PLATFORM SLAB LAYOUT PLAN

designed by: CMJ | drawn by: RD | drawing no: 50705
checked by: | scale: AS SHOWN | sheet no: 3
in charge: MSL | date: 6-30-87
branch: PORT WASHINGTON | of:

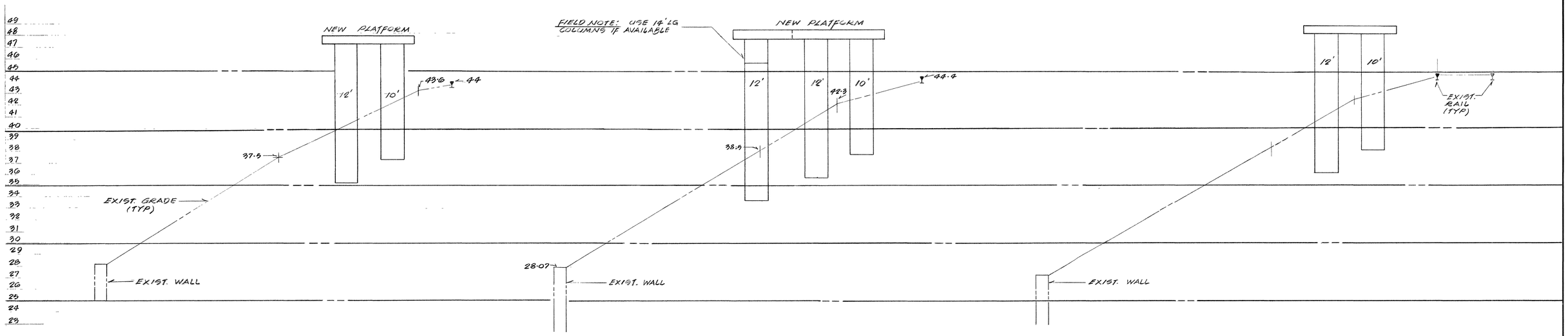

STATION 4+0

STATION 3+49

STATION 3+00

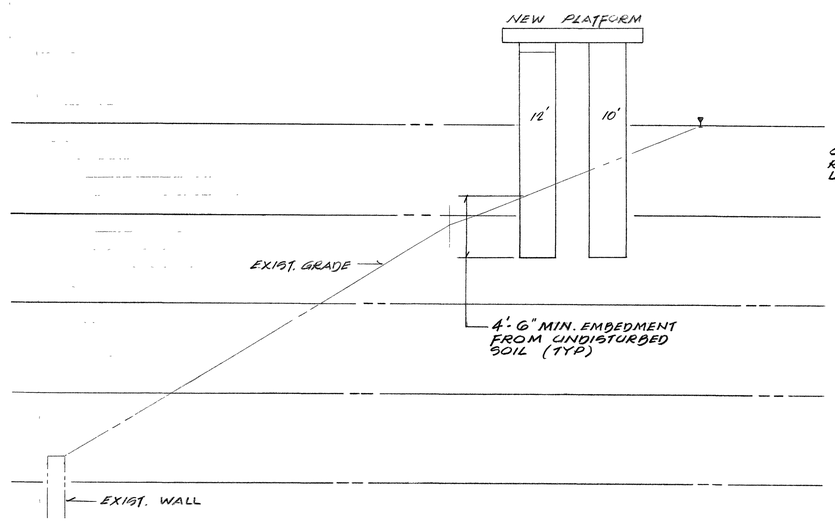

STATION 2+50

ONLY FOR STL.

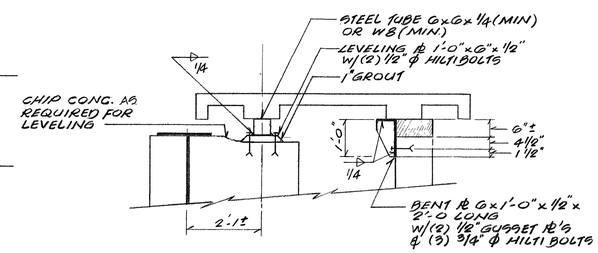

ELEVATION

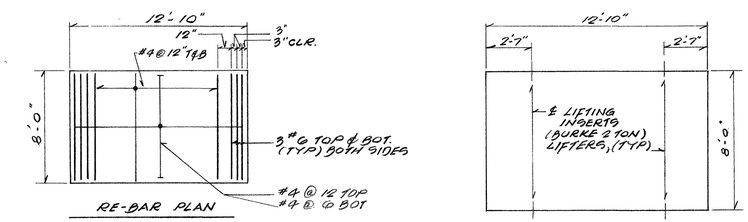

RE-BAR PLAN

N.T.S.

LIFTING INSERT LOCATION PLAN

NOTES:
1) CONC: f'c = 4000 PSI
RE-BAR: GRADE 60 EPOXY
2) CASTING TOLERANCES PER CE-1

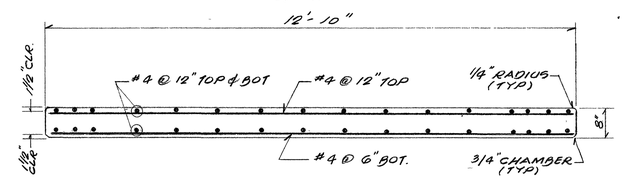

S-1 SPECIAL PRECAST SLAB CROSS SECTION THRU PRE-CAST SLAB

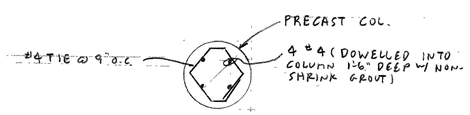

COLUMN CAP REINFORCING DETAIL

(TYP CAPS 18" THK. OR GREATER)

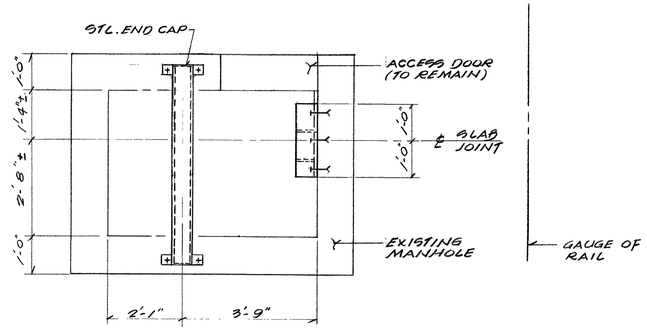

PLAN

DETAIL "Y"

NOTE:

B) COAT STEEL W/(1) COAT OF PAINT.

3 91

REV.	DATE	DESCRIPTION	BY	CHECKED
2	11-90	REVISED NOTES ADDED CAP REINF. DETAIL	JS	LM
1	6-29-90	REVISED & REDRAWN	ALV	J.S./L.M.

project:

FLUSHING MAIN ST. PLATFORM REPLACEMENT

revisions no: date:

Metropolitan Transportation Authority

THE LONG ISLAND RAIL ROAD

Office of the Chief Engineer

Jamaica N.Y. 11435 212-526-0900

drawing title: SOUTH PLATFORM PART. PLAN & CROSS SECTIONS

designed by: J.S.

drawn by: ALV.

drawing no: 90705

checked by: V.P.

scale:

sheet no: 3A

in charge: N.J.M.

date: 2-90

branch: PORT WASH.

of:

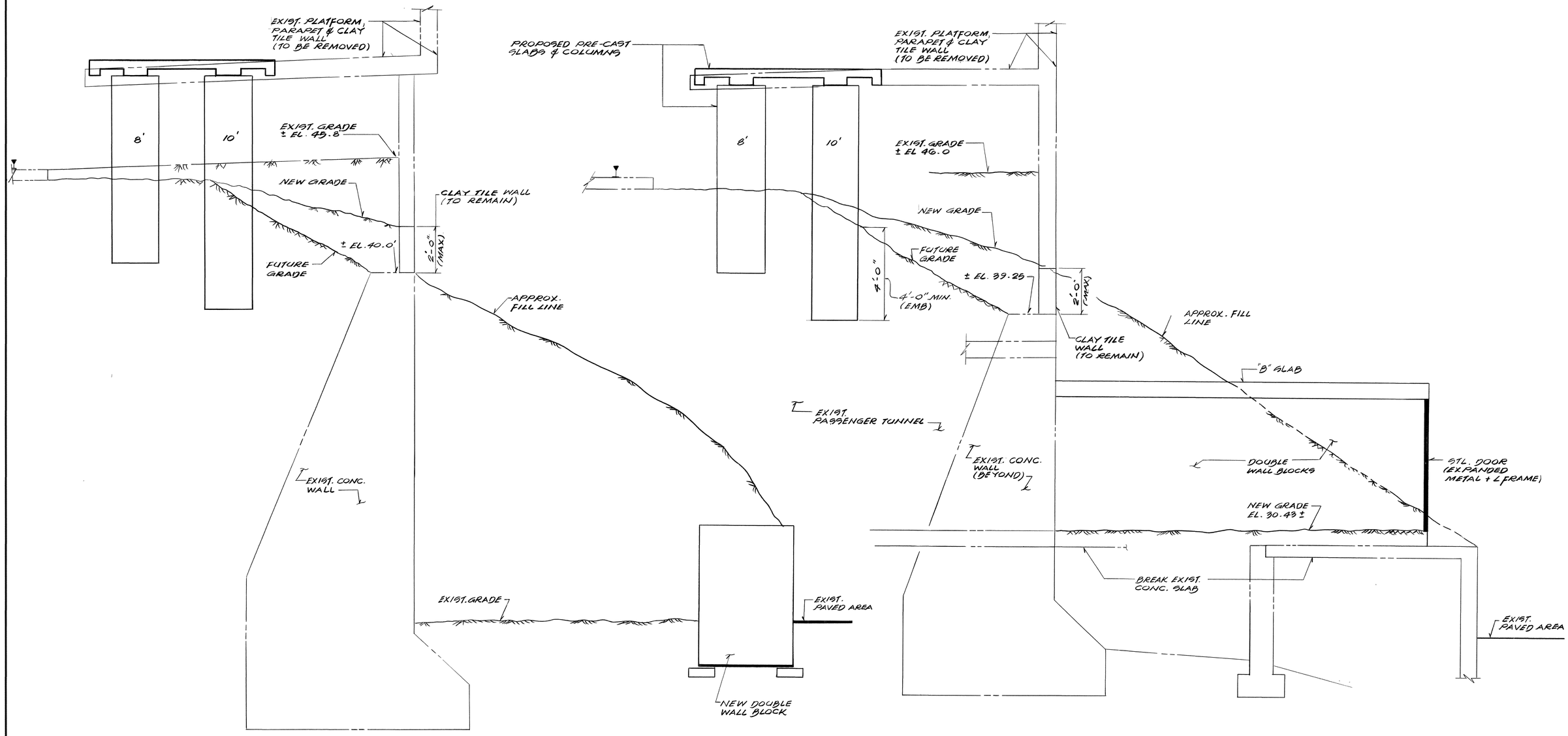

SECTION 200

SECTION 201

3 91

Revision	1	Description	Revision		Description	Revision		Description	Revision		Description	Revision		Description
Revised by	ALV	REVISED & REDRAWN.	Revised by			Revised by			Revised by			Revised by		
Checked by	J.S.	J.S. 6-29-90	Checked by			Checked by			Checked by			Checked by		
Reviewed for Design	J.S.		Reviewed for Design			Reviewed for Design			Reviewed for Design			Reviewed for Design		
Reviewed by Manager	L.M.		Reviewed by Manager			Reviewed by Manager			Reviewed by Manager			Reviewed by Manager		
Approval Date	6-90		Approval Date			Approval Date			Approval Date			Approval Date		

project:

FLUSHING MAIN ST. PLATFORM REPLACEMENT

Design Revisions no: 1. date: 6-90

Metropolitan Transportation Authority

Structures Department

THE LONG ISLAND RAIL ROAD

Office of the Chief Engineer

Jamaica N.Y. 11435 718-990-7400

drawing title: SOUTH PLATFORM SECTIONS

designed by: J.S. drawn by: ALV drawing no: 50705

checked by: VP scale: sheet no: 3B

in charge: date: 2-90

branch: PT. WASH. of:

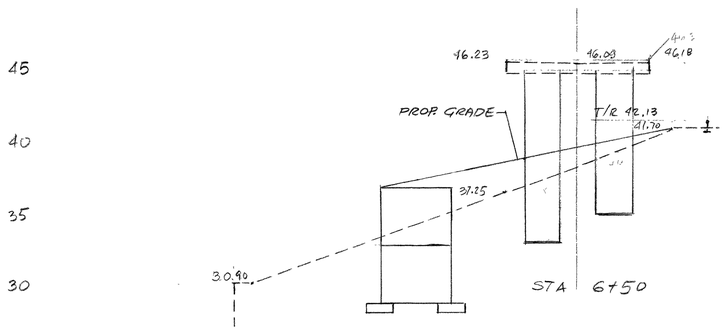

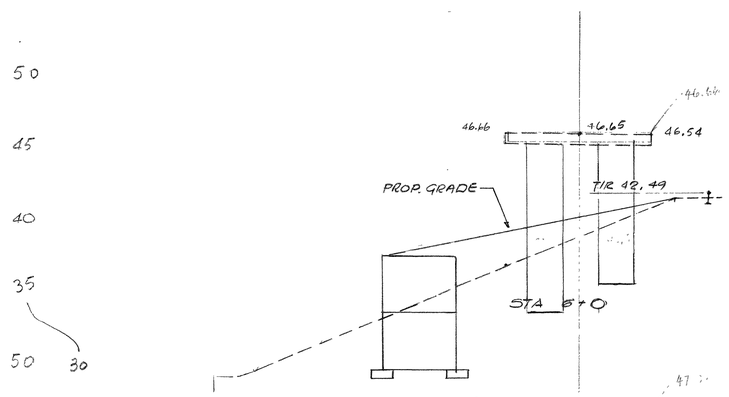

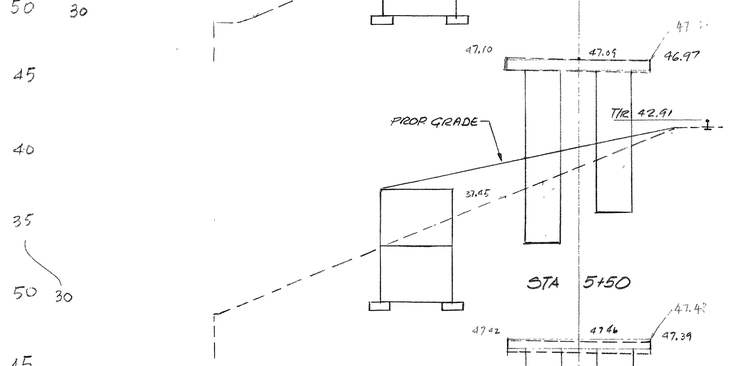

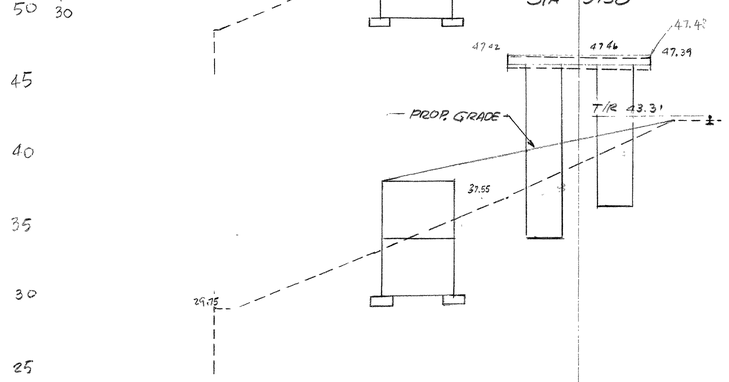

SOUTH PLATFORM

SCALE: HORIZ: 1" = 4'
VERT: 1" = 5'

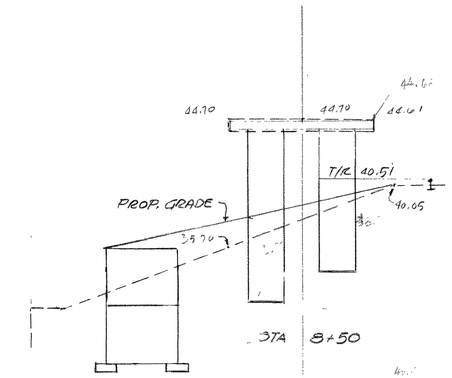

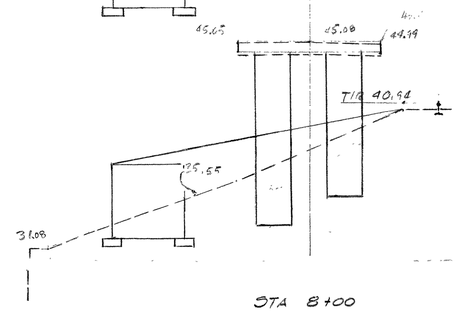

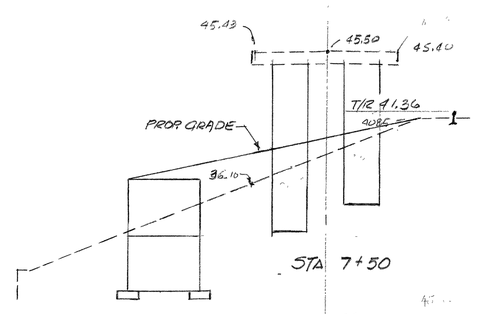

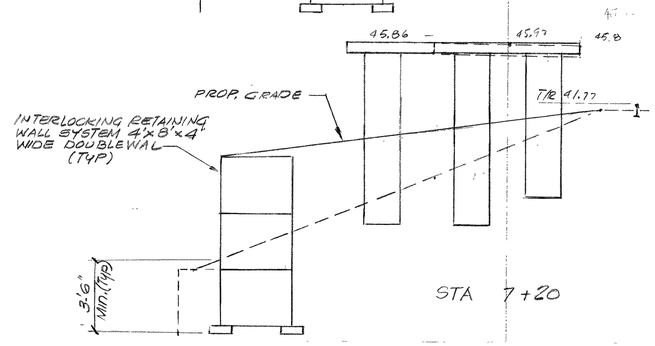

NORTH PLATFORM

SCALE: HORIZ: 1" = 4'
VERT: 1" = 4'

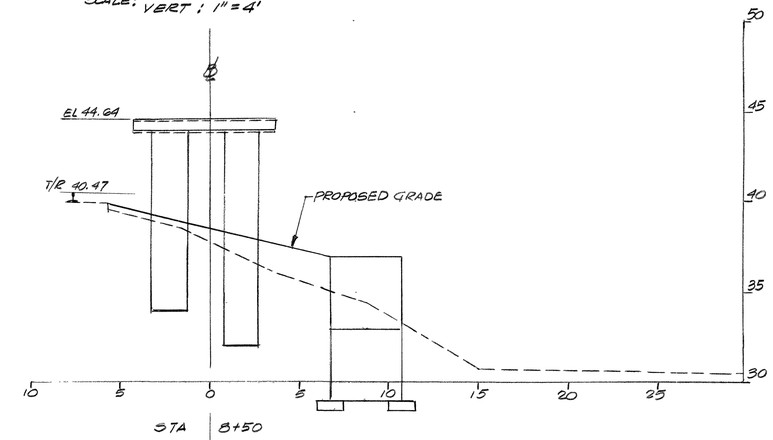

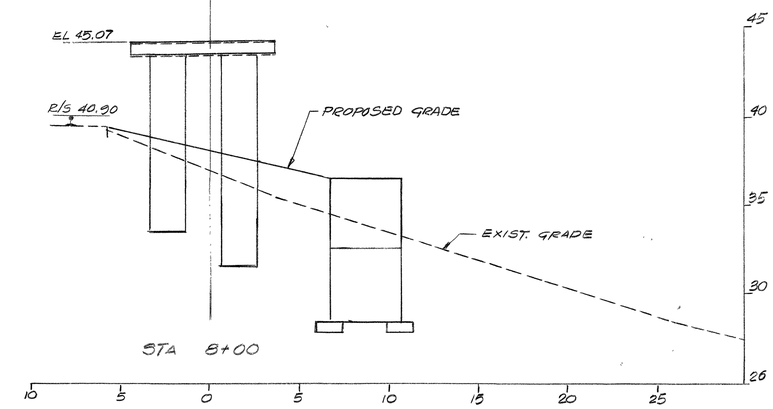

project:

FLUSHING MAIN ST. PLAFORM REPLACEMENT
(LINE IMPROVEMENTS)

revisions
no: date:

Metropolitan Transportation Authority
THE LONG ISLAND RAIL ROAD
Office of the Chief Engineer
Jamaica N.Y. 11435
212-526-0900

drawing title:
CROSS SECTIONS
NORTH & SOUTH PLATFORM

designed by:	drawn by:	drawing no:
CMJ	RD	50705
checked by:	scale: AS NOTED	sheet no:
in charge: MSL	date: 4-15-87	7
branch: PORT WASHINGTON		of:

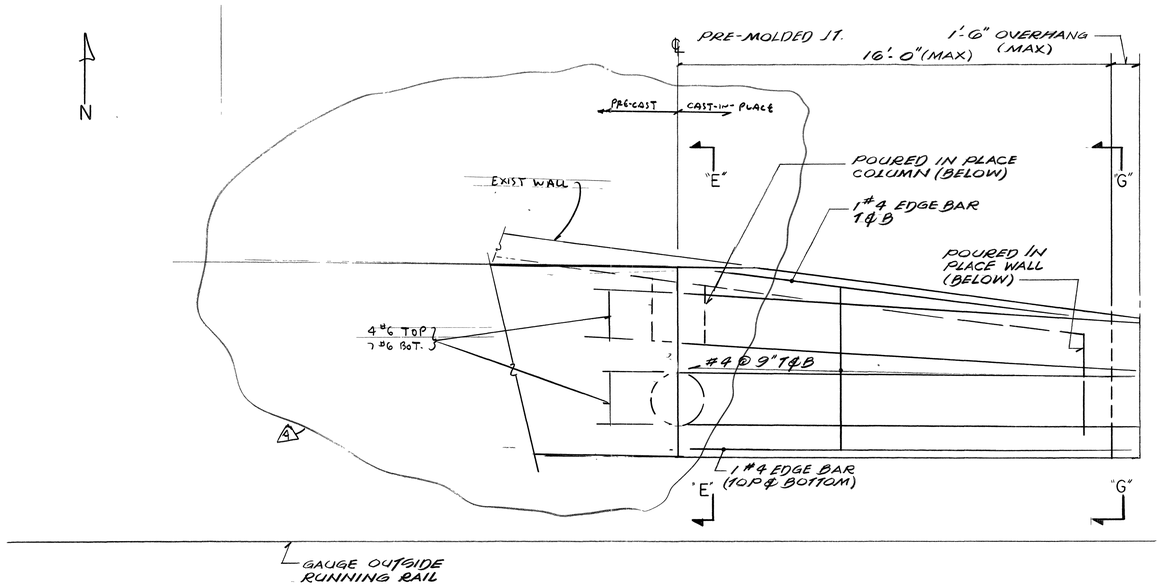

PLAN

DETAIL A

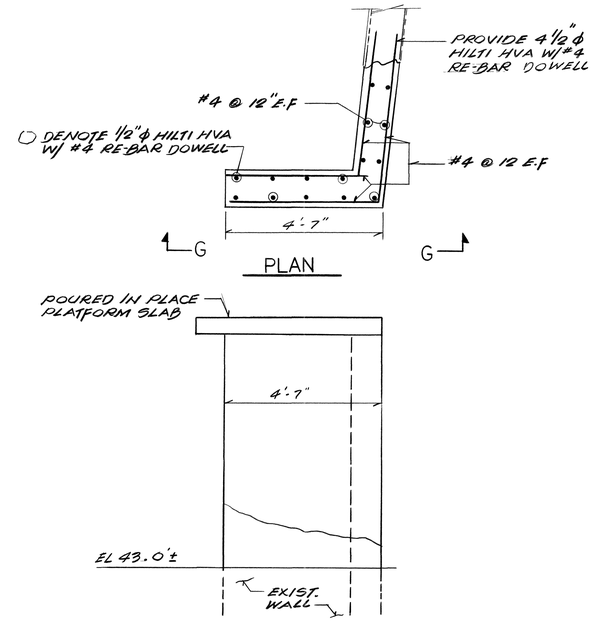

PLAN

SECTION G-G

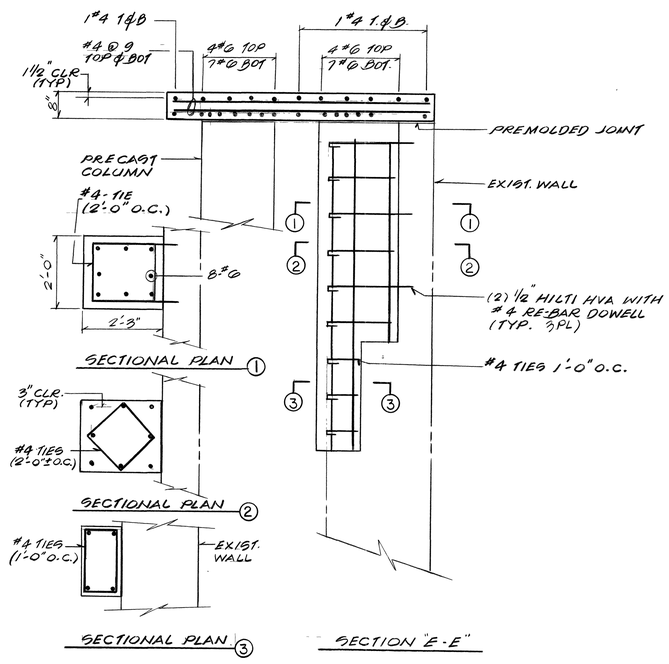

SECTIONAL PLAN ①

SECTIONAL PLAN ②

SECTIONAL PLAN ③

SECTION "E-E"

~~6-29-90~~
7-10-90

Revision	1	Description	Revision	2	Description	Revision	3	Description	Revision	4	Description	Revision		Description
Revised by	ALV	REVISED TO AS BUILT	Revised by	ALV.	REV. DETAIL 'B' VOID DET. 'C', SECT. F-F	Revised by	ALV.	REDRAWN	Revised by	ALV	CORRECTED DETAIL A	Revised by		
Checked by	J.S.		Checked by	J.S		Checked by	J.S.	J.S 6-29-90	Checked by	JJ		Checked by		
Reviewed for Design	J.S.		Reviewed for Design	J.S		Reviewed for Design	J.S.		Reviewed for Design	JAS		Reviewed for Design		
Reviewed by Manager	L.M.		Reviewed by Manager	L.M		Reviewed by Manager	L.M		Reviewed by Manager	LM		Reviewed by Manager		
Approval Date	1-22-90		Approval Date			Approval Date	6-29-90		Approval Date	7-10-90		Approval Date		

project:

FLUSHING MAIN ST. PLATFORM REPLACEMENT (LINE IMPROVEMENTS)

Design Revisions no: date:

Metropolitan Transportation Authority — Structures Department

THE LONG ISLAND RAIL ROAD

Office of the Chief Engineer, Jamaica N.Y. 11435, T.S. 900-7400

drawing title: **SECTIONS AND DETAILS**

designed by: J.S. | drawn by: ALV. | drawing no: 50705

checked by: J.S. | scale: | sheet no: 9

in charge: L.N | date:

branch: PORT WASH. | of:

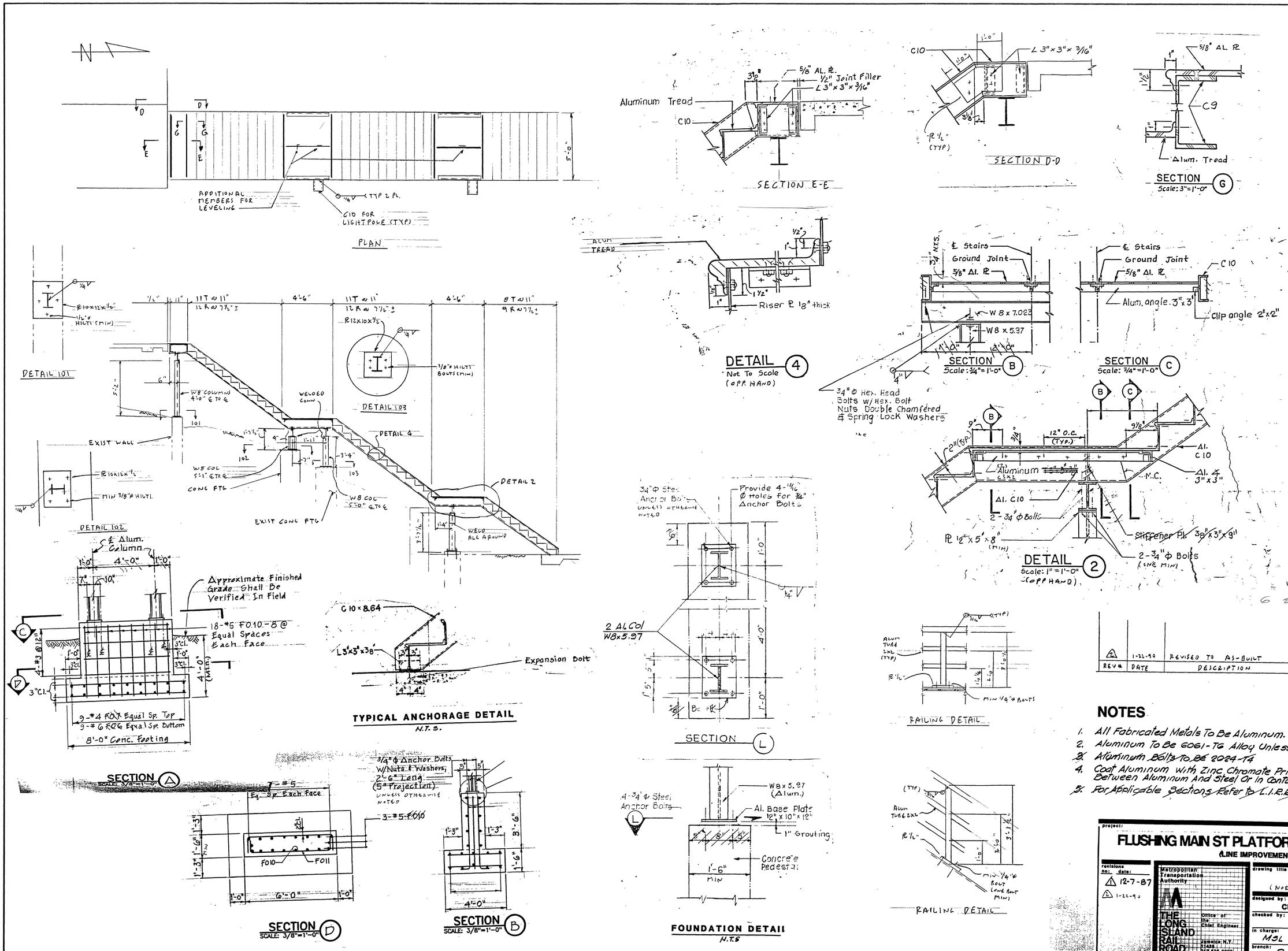

6 29 90

REV #	DATE	DESCRIPTION	BY
2	1-22-90	REVISED TO AS-BUILT	JS

NOTES

1. All Fabricated Metals To Be Aluminum.
2. Aluminum To Be 6061-T6 Alloy Unless Noted.
3. ~~Aluminum Bolts To Be 2024-T4~~
4. Coat Aluminum With Zinc Chromate Primer (Anti-Corrosive) Between Aluminum And Steel Or In Contact With Concrete.
5. ~~For Applicable Sections Refer To L.I.R.R. Dwg. 50628-SH 4~~

project:

FLUSHING MAIN ST PLATFORM REPLACEMENT
(LINE IMPROVEMENTS)

revisions no:	date:
1	12-7-87
2	1-22-90

Metropolitan Transportation Authority
THE LONG ISLAND RAILROAD
Office of the Chief Engineer
Jamaica, N.Y. 11435
516-439-6800

drawing title: **STAIRS DETAILS** (NORTH PLATFORM)

designed by:	drawn by:	drawing no:
CMJ	RD	5070
checked by:	scale: AS Shown	sheet no: 10
in charge: MSL	date: July 1/87	
branch: Port Washington		of:

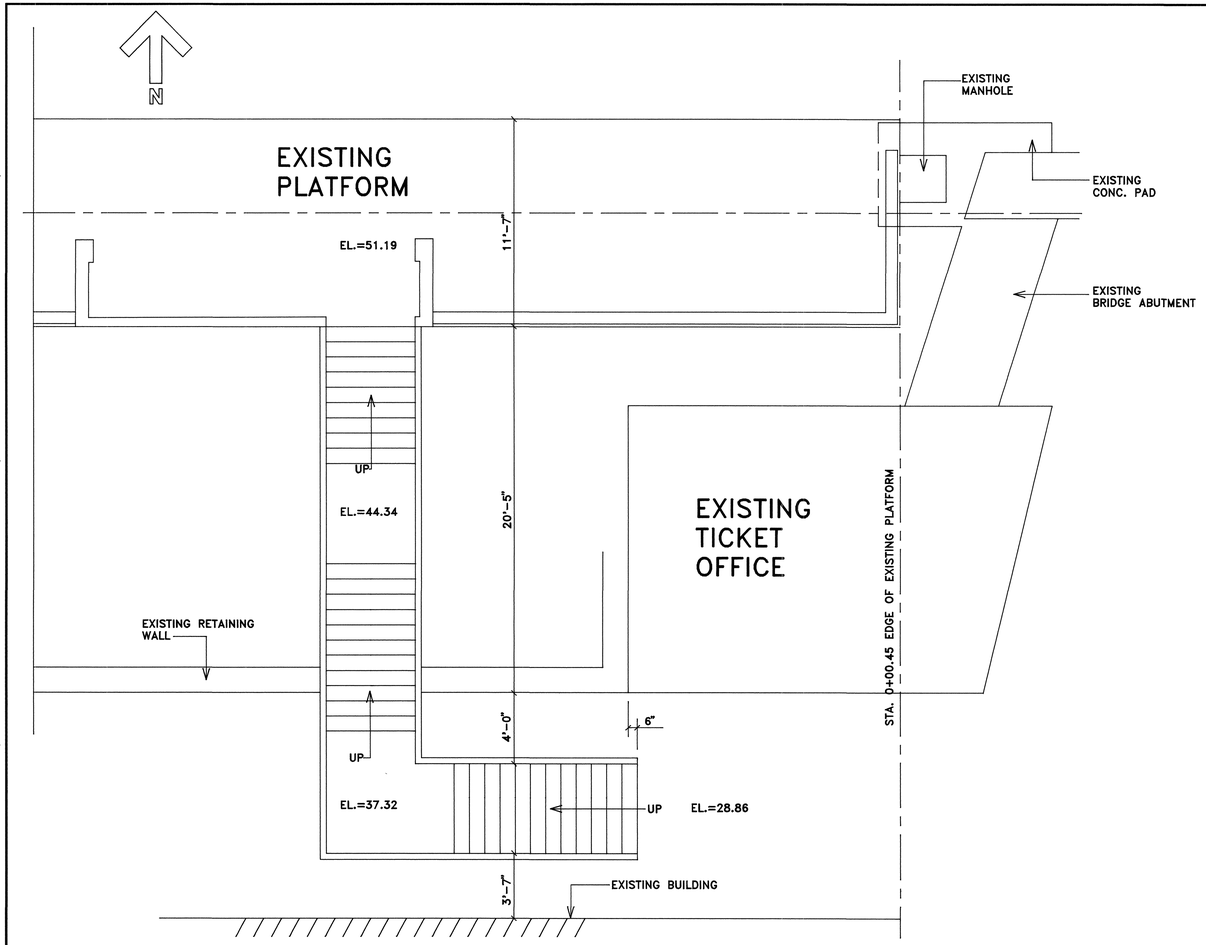

EXISTING CONDITIONS (FOR REF. ONLY)

NOT TO SCALE

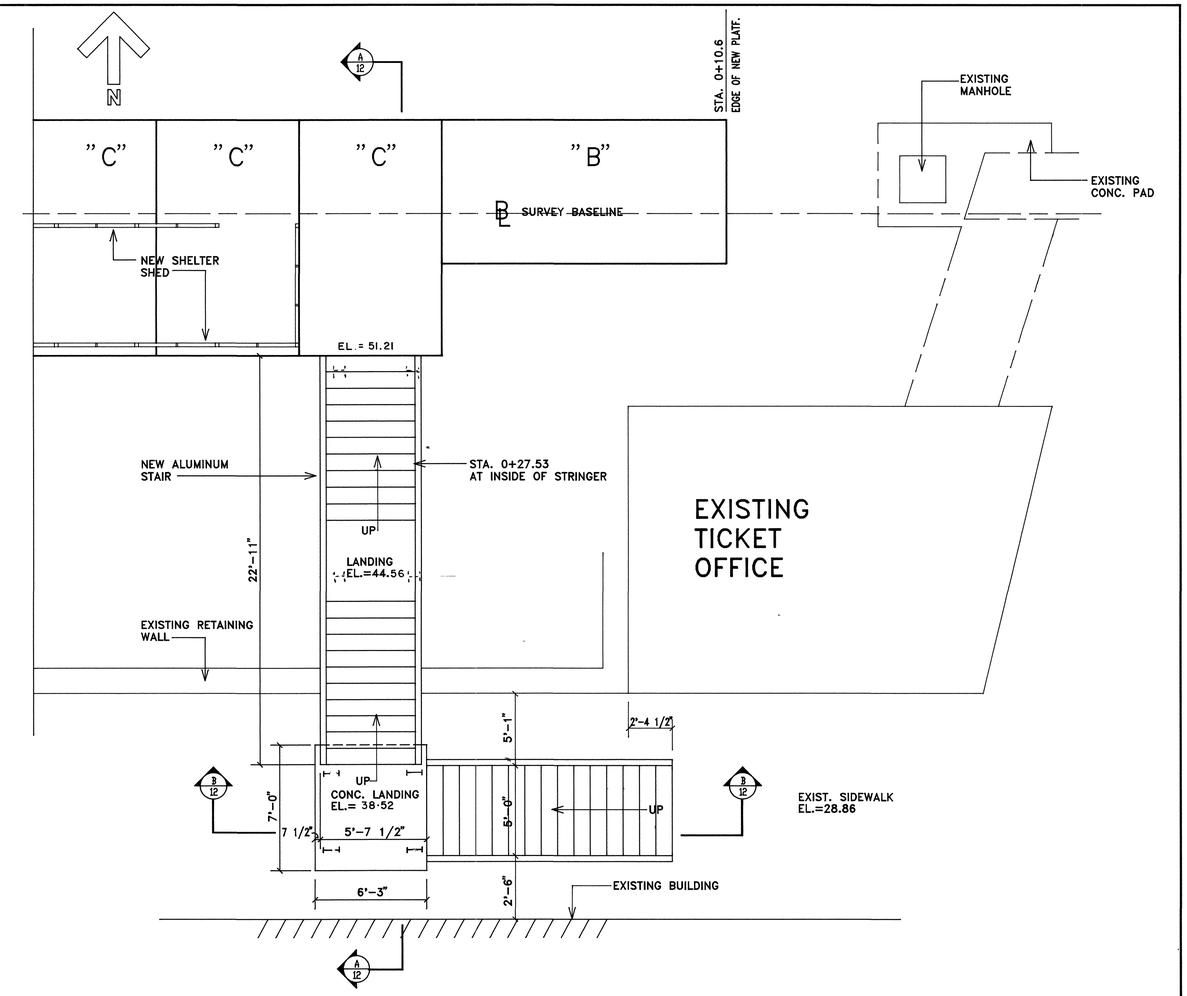

NEW PLAN

NOT TO SCALE

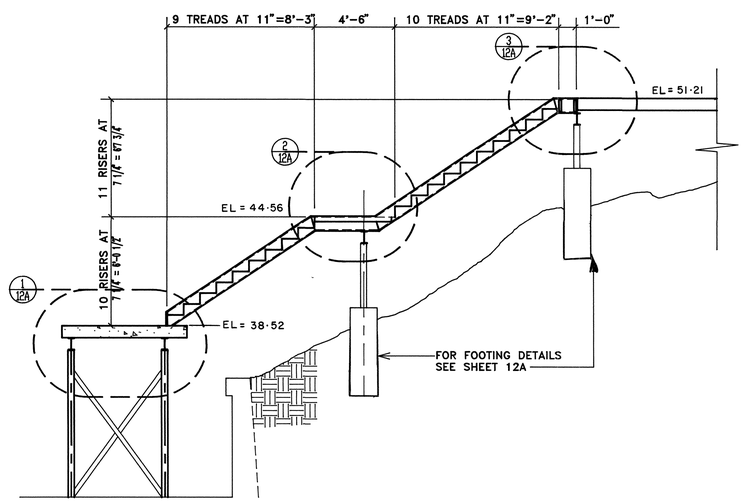

SECTION A–A

SCALE:1/4"=1'-0"

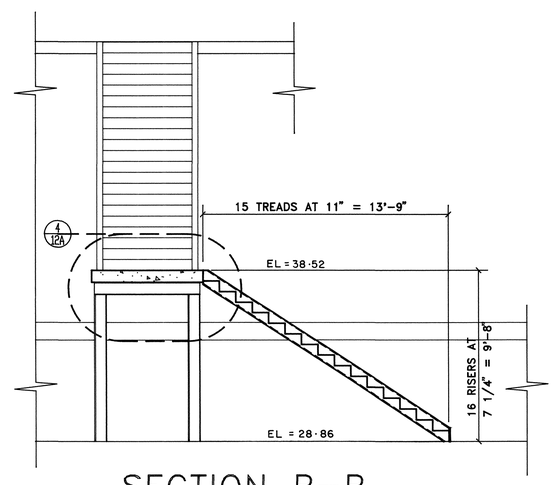

SECTION B–B

SCALE:1/4"=1'-0"

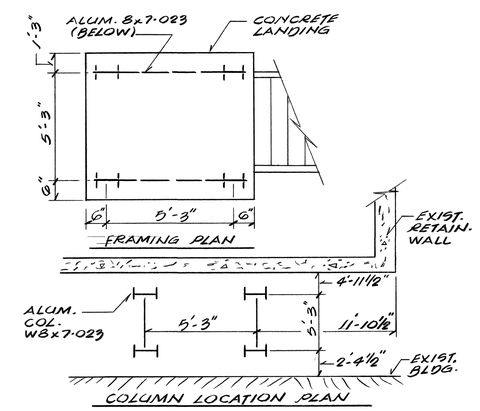

3 91

JS 4-90

REV #	DATE	DESCRIPTION	BY	CHK'D
2	11-90	REV SECT A-A	JS	LM

project:

FLUSHING MAIN STREET PLATFORM REPLACEMENT

revisions no. date: 1 4/90 NEW DWG. GENERATED

2-11-90

Metropolitan Transportation Authority — Structures Department

THE LONG ISLAND RAIL ROAD

Office of the Chief Engineer

Jamaica N.Y. 11435 718-990-7460

drawing title: SOUTH STAIR PLAN EXISTING AND PROPOSED

designed by: J.S. | drawn by: J.B.D./ALV | drawing no: 50705

checked by: C.M.J. | scale: 1/4"=1' | sheet no: 12

in charge: V.P. | date: 12/7/87

branch: PORT WASHINGTON | of:

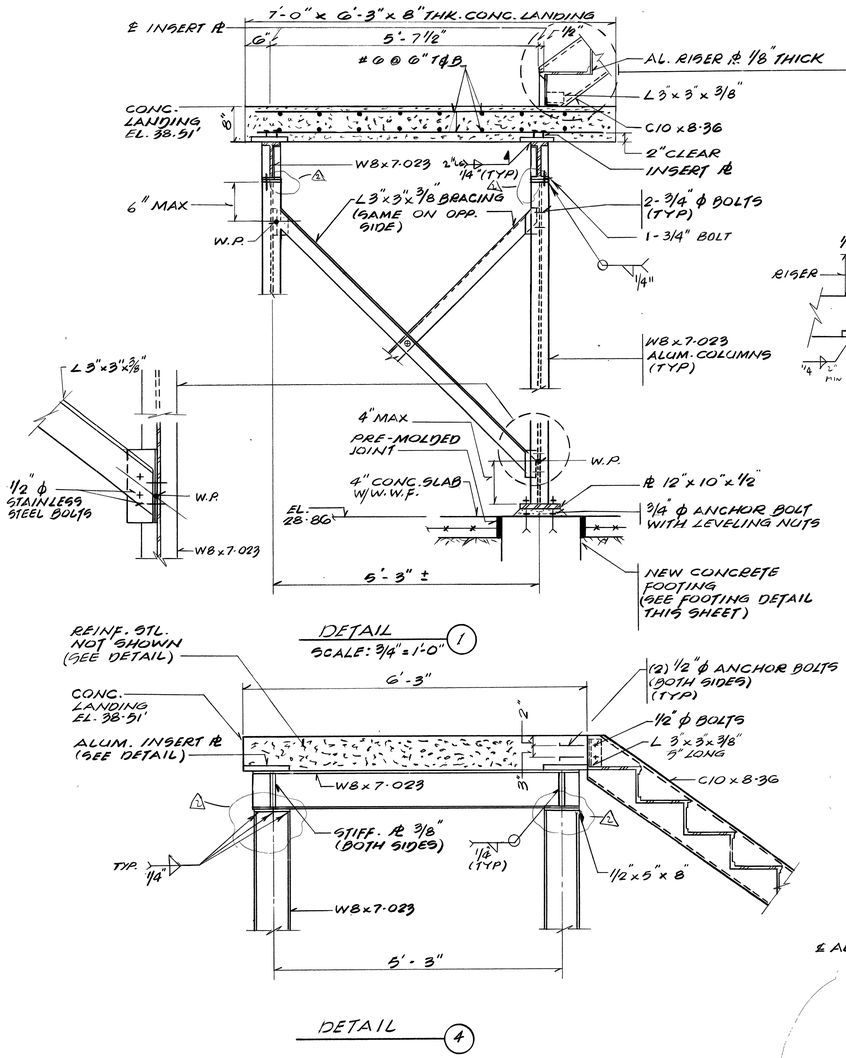

DETAIL 1
SCALE: 3/4" = 1'-0"

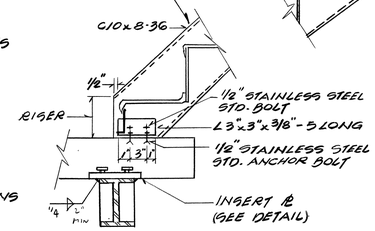

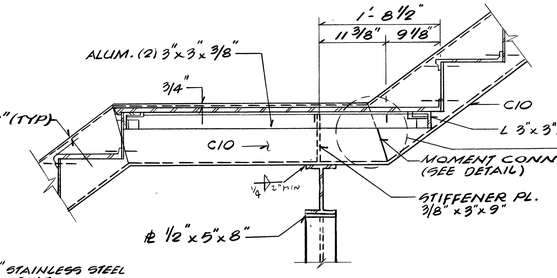

DETAIL 2

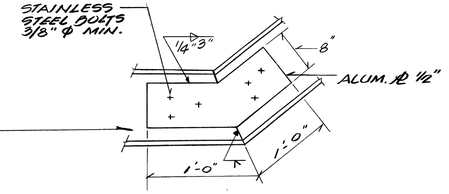

MOMENT CONNECT. DETAIL

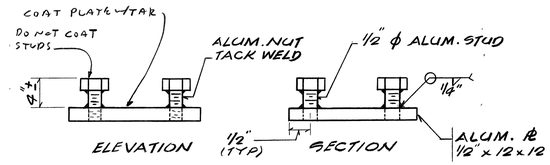

ELEVATION SECTION

6 INSERT ∠ DETAIL
(4) REQUIRED

NOTES:
1. ALL STRUCTURAL SHAPES TO BE ALUMINUM 6061-T6
2. CAST-IN PLACE CONCRETE: fc = 4000 PSI. RE-BAR: GRADE 60 EPOXY COATED.

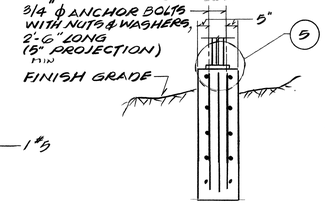

SECTION
SCALE: 3/8" = 1'-0" D

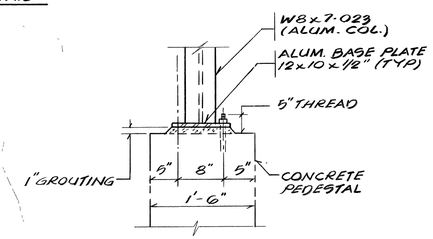

DETAIL 5
SCALE: 1" = 1'-0"

DETAIL 4

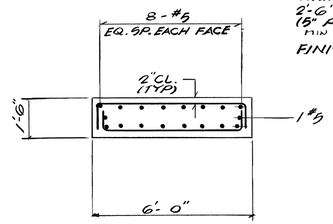

SECTION
SCALE: 3/8" = 1'-0" C

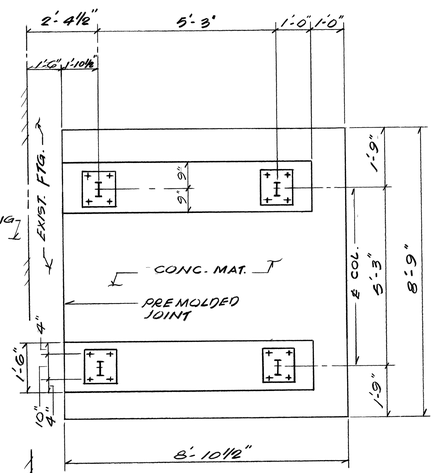

PLAN
STAIR TOWER FOOTING

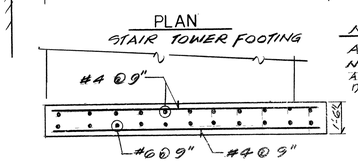

ELEV

NOTE:
ALL REBAR NOT SHOWN AS PER FOOTING DETAILS SH. 12A

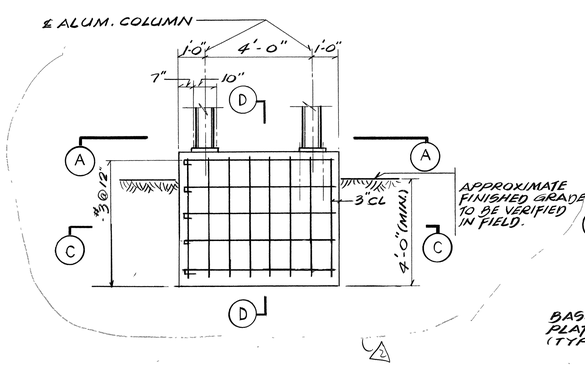

SECTION B

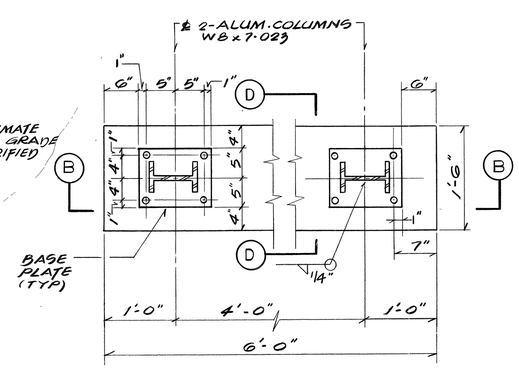

PLAN
SCALE: 1" = 1'-0" A

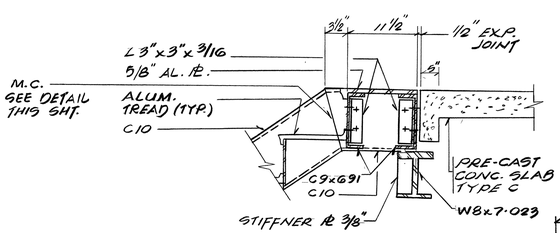

DETAIL 3

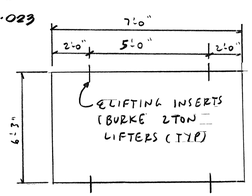

STAIR LANDING
INSERT LOCATION PLAN

FOOTING DETAIL

REV.	DATE	DESCRIPTION	BY	CHECKED
2	11-90	REV FTG DETAIL, DETAIL 1, i, 4	JS	LM
1.	6-29-90	ADDED LANDING INSERT LOC. PLAN ADDED STAIR TOWER FOOTING	ALV	J.S./L.M.

3 91

project:

FLUSHING MAIN ST. PLATFORM REPLACEMENT

revisions no: date:

Metropolitan Transportation Authority
THE LONG ISLAND RAIL ROAD
Office of the Chief Engineer
Jamaica N.Y. 11435
212-526-0900

drawing title: SOUTH STAIR DETAILS

designed by: J.S.
drawn by: ALV.
drawing no: 50705
checked by: C.M./N.P.
scale: AS NOTED
sheet no: 12A
in charge: N.J.M.
date: 4-90
branch: PT. WASH.
of:

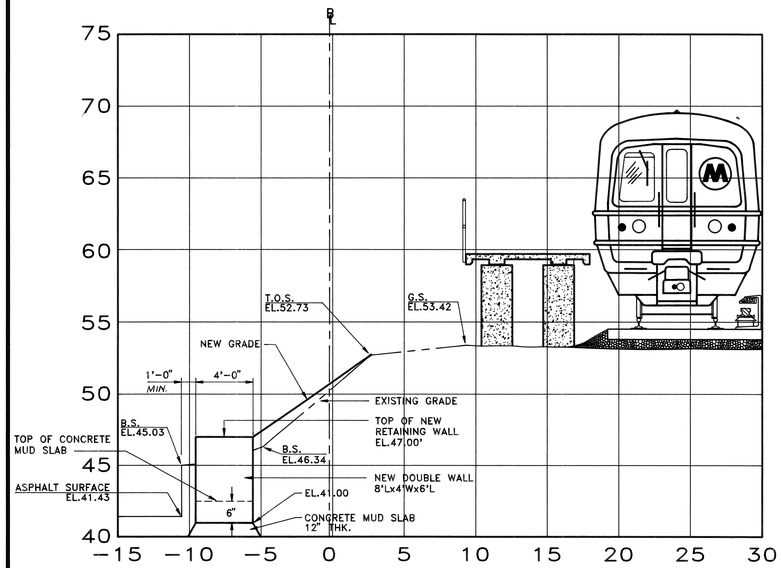

PROFILE SECTION
STA. 1+00.00
SCALE: 1"=5'-0"

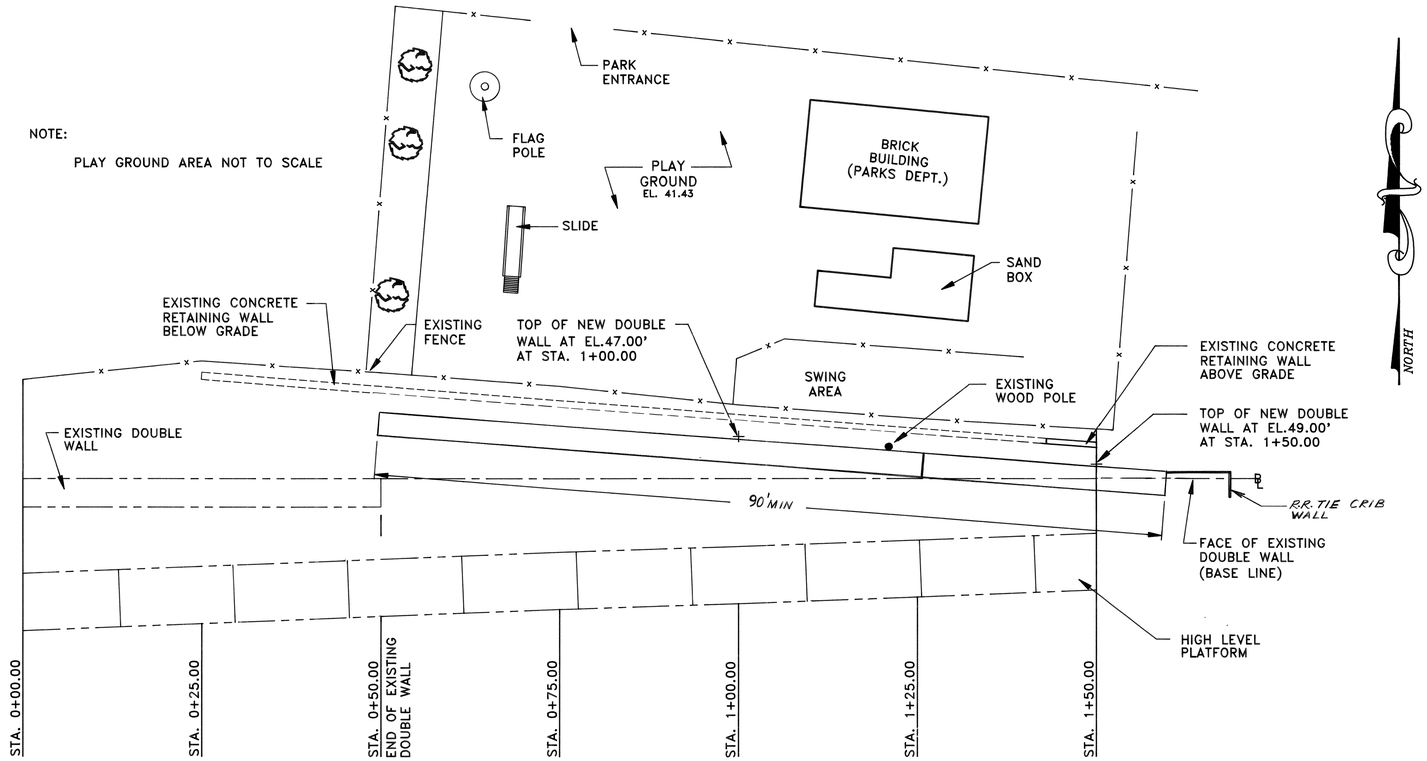

PLAN VIEW
EXISTING CONDITIONS
AND NEW DOUBLE WALL
SCALE: 1"=10'-0"

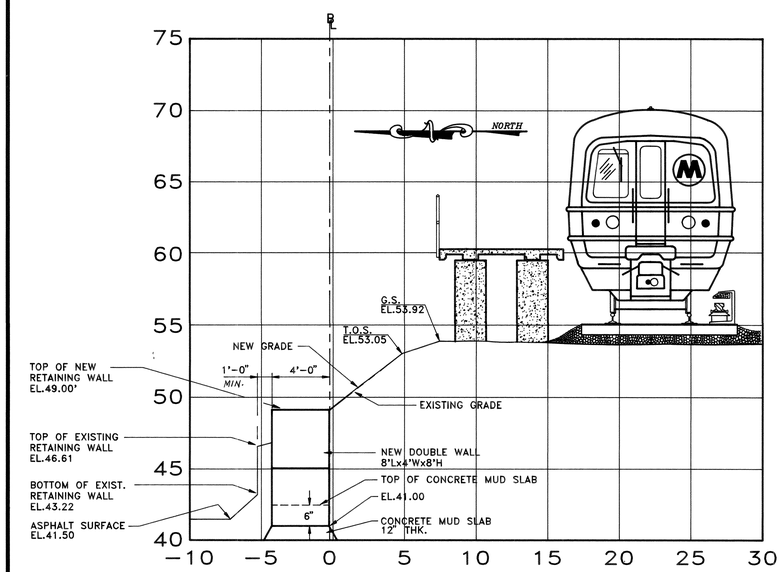

PROFILE SECTION
STA. 1+50.00
SCALE: 1"=5'-0"

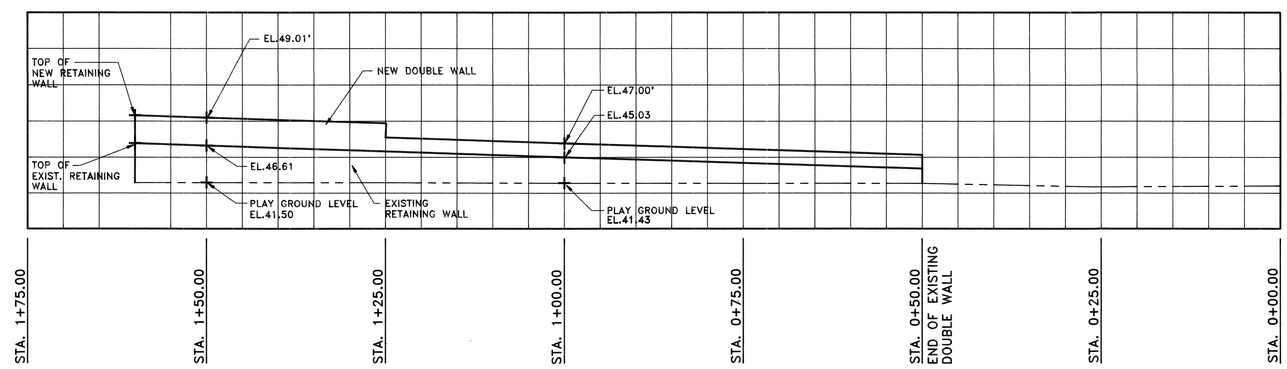

SOUTH ELEVATION
EXISTING CONDITIONS
AND NEW DOUBLE WALL
SCALE: 1"=10'-0"

Revision	0	Description	Revision	1	Description	Revision		Description	Revision		Description	Revision		Description
Revised by	ASC	ISSUED FOR CONSTRUCTION.	Revised by	MV	REV SECT A	Revised by			Revised by			Revised by		
Checked by	JS		Checked by	JS		Checked by			Checked by			Checked by		
Reviewed for Design			Reviewed for Design	JS		Reviewed for Design			Reviewed for Design			Reviewed for Design		
Reviewed by Manager			Reviewed by Manager	CM		Reviewed by Manager			Reviewed by Manager			Reviewed by Manager		
Approval Date	9/5/90		Approval Date	12-90		Approval Date			Approval Date			Approval Date		

project:

FLUSHING MAIN STREET PLATFORM REPLACEMENT

Design Revisions no: date: 12-12-90

Metropolitan Transportation Authority — Engineering Department

THE LONG ISLAND RAIL ROAD — Office of the Chief Engineer, Jamaica, N.Y. 11435, (718) 990-2400

drawing title: DOUBLE WALL NORTH SIDE OF PLATFORM

designed by:	drawn by:	drawing no:
	ASC	50705
checked by: JS/CMJ	scale: AS NOTED	sheet no: 13
in charge: VP	date: 9/5/90	
branch: PORT WASHINGTON		of:

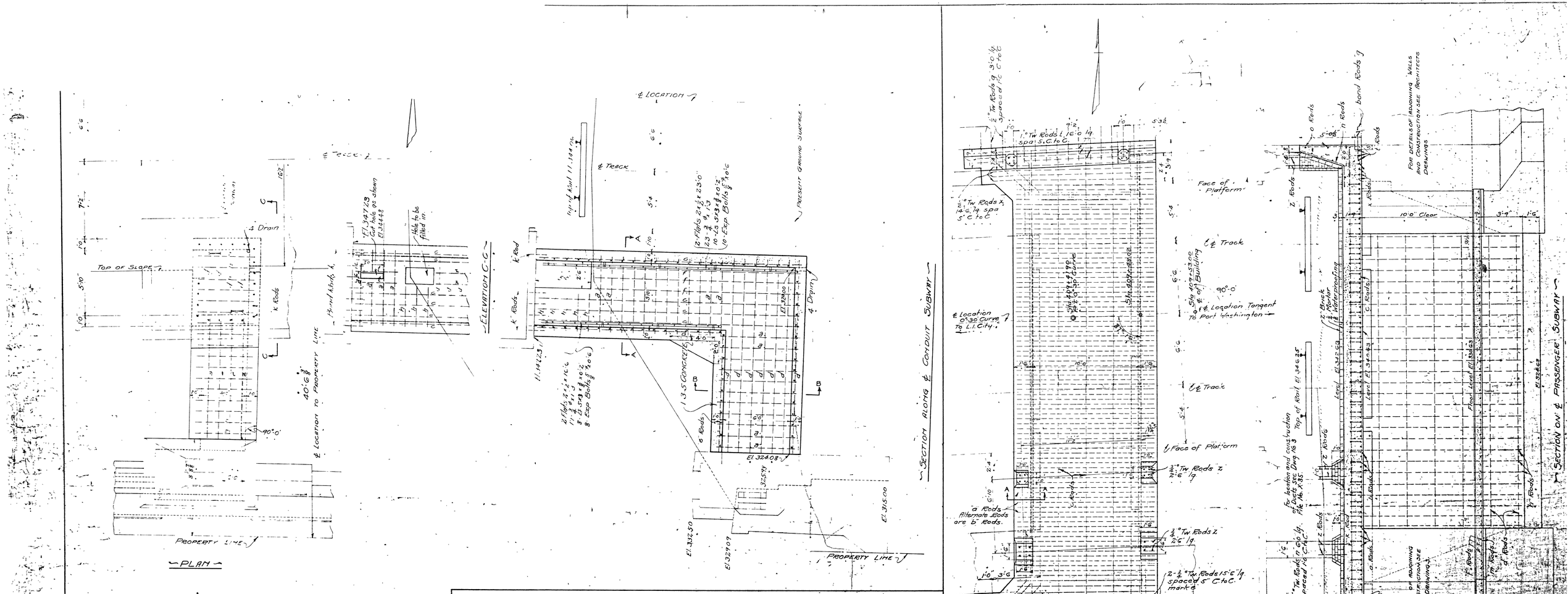

BILL OF RODS			
No.	Size	Lgh.	Mark
48.	½" Tw. Rds.	7'-0"	a.
68	½" "	5'-6"	b.
11.	½" "	23'-6"	c.
20.	½" "	17'-6"	d.
4.	½" "	10'-6"	e.
3.	½" "	18'-6"	f.
8.	½" "	3'-6"	h.
20.	½" "	1'-6"	k
2	½" "	4'-3"	t
2	½" "	16'-6"	x.

BILL OF RODS			
No.	Size	Lgh.	Mark
41.	½" Tw. Rods	12'-6"	a.
42.	½"	14'-0"	b.
10.	½"	21'-8"	c
6.	½"	26'-3"	d.
57.	½"	7'-7"	e.
63.	½"	15'-6"	h.
4.	½"	22'-8"	k.
10.	½"	20'-0"	m
26.	½"	9'-0"	n.
18.	½"	12'-6"	o.
3.	1"	15'-6"	s
3.	1"	16'-0"	t.
4.	⅝"	14'-6"	x.
6.	½"	3'-0"	y.
24.	½"	2'-6"	z.
16.	½"	3'-0"	q.
2	½"	15'-6"	q.

Rods Required			
No.	Size	Length	Mark
12.	½" Tw. Rods	12'-0"	a
20	½" "	7'-3"	b
27.	½" "	8'-0"	a
4.	½" "	9'-3"	d
4.	½" "	9'-7"	f