SustaiNYC

Achieving Community, Economic and Environmental Sustainability through Passive House Design

East Harlem, Manhattan

Request for Proposals

Issue Date: May 23, 2016
Pre-Submission Conference: June 15, 2016
Proposal Submission Deadline: August 23, 2016

HNY
HOUSING NEW YORK

NYC
Department of Housing Preservation & Development

Mayor, Bill de Blasio
Deputy Mayor, Housing and Economic Development, Alicia Glen
Commissioner, NYC Department of Housing Preservation and Development, Vicki Been

TABLE OF CONTENTS

I. INTRODUCTION **5**

II. RFP INFORMATION AND TIMELINE **7**

III. DEFINITIONS **9**

IV. THE SITE: SITE DESCRIPTION AND CONTEXT **11**
A. Site Description 11
B. Neighborhood and Project Context 13

V. DEVELOPMENT PROGRAM: GOAL, REQUIREMENTS, GUIDELINES **18**
A. Development Goals 18
B. Development Program Requirements and Preferences 19
C. Architectural and Site Design 21

VI. SCOPE: DEVELOPER OBLIGATIONS **24**
A. Development Team and Project Management 24
B. Community Outreach 25
C. Design Requirements and Guidelines 25
D. Development Program 25
E. Environmental Review 25
F. Public Land Use, Zoning and Approvals 25
G. Financing 26
H. Disposition and Disposition Price 26
I. Construction 26
J. Marketing, Sales/Leasing 27
K. Operating Rents – Rent Stabilization 27
L. Property Management and Maintenance 27
M. Local Hiring/HireNYC 27

VII. FINANCING AND AFFORDABILITY: GENERAL TERMS **29**
A. Financing 29
B. Transfer Taxes and Disposition Price 30
C. HPD-HDC Term Sheets 30
D. Other Funding Programs 30
E. Real Property Taxes and Exemptions 31
F. Resale, Refinancing, and Recapture Restrictions 32

VIII. ADDITIONAL REGULATIONS AND REQUIREMENTS **33**
A. Fair Housing Requirements 33
B. Warranty Coverage 33
C. Section 3 Clause 33
D. HOME Funds and Davis-Bacon 33
E. Equal Opportunity 33

IX. DEVELOPER SELECTION PROCESS **34**
A. Review 34
B. Threshold Requirements 34
C. Competitive Selection Criteria…. 36
D. Selection 39

X. SUBMISSION INFORMATION AND REQUIREMENTS **41**
A. Proposal Content and Tabbing 41

B. Proposal Format 49
C. Proposal Modifications…. 49
D. RFP Addenda 49
E. References and Requests for Further Information 50

XI. CONDITIONS, TERMS, AND LIMITATIONS 51

XII. CONFLICTS OF INTEREST 53

APPENDICES

A. Community Visioning Report
B. Community Garden Profiles and Priorities
C. East Harlem Neighborhood Plan
D. Passive House Resources
E. HPD Design Guidelines for Multifamily New Construction and Senior Housing
F. Laying the Groundwork Design Guidelines
G. 2015 Enterprise Green Communities Criteria Certification Overlay for NYC HPD Projects
H. HPD-HDC Marketing Guidelines
I. Equal Opportunity
J. Proposal Forms - Forms are available for download on the website in Word and Excel formats as part of this RFP.

Form A-1:	Completeness Checklist
Form A-2:	Applicant's Letter
Form B:	Proposal Summary
Form C-1:	Development Team Information and Applicant Questionnaire
Form C-2:	Not-for-Profit Organization Form
Form D-1:	Residential Development Experience and Current Workload
Form D-2:	Residential Management Experience and Current Workload
Form D-3:	Management Questionnaire
Form E:	Assets Statement
Form K:	Financing Proposal

*The lettering of Forms corresponds to the Submission Tabs in the Proposal. All Tabs do not require a Form to be filled out (see *Section X.A. – Submission Information and Requirements - Proposal Content and Tabbing*).

I. INTRODUCTION

Community Workshop for East 111th Street Site: February 25, 2016

Pursuant to this Request for Proposals ("RFP"), the City of New York ("City"), through its Department of Housing Preservation and Development ("HPD"), is inviting developers ("Applicants") to submit development proposals ("Proposals") for the design, construction, and management of a high-quality, sustainable, mixed-income and mixed-use affordable housing development ("Project") in the East Harlem neighborhood of Manhattan.

This RFP is in accordance with the Mayor's *Housing New York: A Five-Borough, Ten-Year Plan,* which commits to the preservation or new construction of 200,000 units by 2024. The proposed Project serves the Plan's crucial goals of fostering diverse, thriving neighborhoods and building new affordable housing for all New Yorkers.

The Development Site ("Site") is owned by the City of New York and is located on Block 1617, Lots 20, 22-33 and 35-54. The Site consists of approximately 76,600 square feet and is located in Community District 11.

The Project must be affordable and provide housing units at a range of Area Median Income ("AMI") levels that meet the economic needs of the community and further fair housing objectives by promoting diverse neighborhoods. The Development should include quality commercial and community facility uses, as well as the required parking and accessory open space to enhance the overall quality of life, health, safety, and active living in the neighborhood.

GreenThumb Community Gardens - The Project will incorporate four community gardens that are currently operating on the Site. The Project design and programming is to consider and include various needs and

priorities that have been identified through outreach with the gardeners. The vision is to create high quality and active community gardens that will enhance everyday life in the neighborhood.

Community Vision - Through community workshops and outreach, residents have described various priorities in site uses, design, and programming, which have been compiled and presented in the Community Visioning Report attached to this RFP (*Appendix A*). Many of these priorities have also been described in the East Harlem Neighborhood Plan, a vision for East Harlem developed through extensive community engagement led by City Council Speaker Melissa Mark-Viverito, along with Community Board 11, Community Voices Heard and Manhattan Borough President Gale Brewer. The Project should be responsive to these goals and priorities.

Passive House Design - The City of New York has committed to reducing greenhouse gas emissions by 80 percent by 2050. Launched in September 2014, *One City Built to Last* outlines a pathway to this level of reductions, which calls for a 60 percent average reduction from buildings in New York City. Recognizing the importance of energy efficiency and green building, in January 2011, HPD launched its comprehensive green building policy requiring green building certification as a condition of financing. In an effort to take meaningful steps toward achieving the goals laid out in *One City Built to Last*, HPD is requiring Passive House in this RFP, which will inform design possibilities and feasibility at this scale. Passive House is a building standard that significantly improves the energy efficiency of buildings, while providing a number of benefits to residents and property owners. Passive House design reliably provides reduction in energy needed for heating and cooling of up to 90%, and up to 75% reduction in overall energy use, compared to existing buildings. It focuses on passive measures and building components such as insulation, airtightness and heat recovery to provide tenants with superior quality residences, while increasing long term viability for building owners through lower utility bills. Residents benefit from great indoor air quality, comfortable and even temperatures, significantly reduced energy bills and acoustically superior homes from increased noise attenuation from neighbors and street noise.

City-owned properties provide an opportunity for achieving broad public policy and neighborhood goals for NYC communities. HPD is proud to issue this RFP and undertake a competitive review and selection process to ensure that these resources leverage and maximize investments to create livable, valuable, and affordable neighborhoods.

II. RFP INFORMATION AND TIMELINE

Community Workshop for East 111th Street Site: February 25, 2016

A. Applicant Eligibility

This is an open, competitive, and transparent RFP process to qualified Developers. Applicants to the RFP may be for-profit or non-profit development corporations that demonstrate the experience and capacity to implement the proposed Project. Applicants may also be partnerships between for-profit or non-profit entities with community development corporations (CDCs) or community based organizations (CBOs) that enhance the overall community development approach of the Project. In addition, M/WBE developers are strongly encouraged to respond to the RFP.

Applicants are responsible for assembling a development team ("Development Team") that includes members with expertise in affordable housing development and management; mixed-use development; and, commercial development and leasing, if applicable. The Development Team will be responsible for undertaking all aspects of development and finance, design and construction, leasing and property management, and other requirements further described in this RFP.

All Applicants must adhere to the requirements of this RFP. HPD will select an Applicant based on an evaluation of the Threshold Requirements and Competitive Selection Criteria detailed in *Section IX. Developer Selection Process*.

B. Inquiries

All communications and inquiries regarding this RFP should be directed in writing to Evan Easterbrooks-Dick at:

E-mail: E111RFP@hpd.nyc.gov

All written questions should be submitted by **August 9th, 2016** to be included in the RFP addendum.

C. Pre-Submission Conference

A pre-submission conference will be held on **at 2:00 PM** on **June 15, 2016** at 125 Worth Street, 2nd Floor auditorium, New York, NY 10013. The date, time, and location of this pre-submission conference and any updates and/or additional communications regarding this RFP will also be posted on HPD's website at the following address: http://www.nyc.gov/html/hpd/html/developers/rfp.shtml

HPD strongly recommends that interested Applicants attend this pre-submission conference, as this will be the only opportunity to ask questions and receive answers in person regarding the RFP. Responses to all inquiries will be collectively provided at the pre-submission conference and in an addendum, which will be posted on HPD's website and sent to all registered prospective Applicants after the pre-submission conference.

People with disabilities requiring special accommodations to attend and/or participate in the pre-submission conference should contact Evan Easterbrooks-Dick at the email address provided above.

D. Passive House Training with NYSERDA

Training will be offered through NYSERDA, in partnership with the Building Energy Exchange (BEex) on submitting effective proposals with respect to Passive House design for this site. Sessions will tentatively be held on the below dates. HPD will confirm the exact date and time of the NYSERDA trainings on our website and at the Pre-Submission Conference.

- Session 1: June 21, 2016
- Session 2: June 28, 2016

E. Time and Place of Submission

On or before the submission deadline, the Applicant must submit a development proposal in accordance with the instructions and attachments contained in this RFP, as well as in any addenda that may be issued to the RFP. All submissions become the property of HPD.

Proposals must be delivered by hand no later than 4:00 p.m. on **August 23rd, 2016** to:

N.Y.C Department of Housing Preservation and Development
Office of Neighborhood Strategies
Division of Predevelopment Planning
100 Gold Street, 9X Area
New York, NY 10038
Attention: Evan Easterbrooks-Dick

Late submissions will not be accepted.

III. DEFINITIONS

Applicant
An individual, partnership, limited liability company, corporation, joint venture, or other entity that submits a Proposal in response to this RFP.

Area Median Income (AMI)
Area Median Income shall mean the median income levels as modified by household size for the New York metropolitan statistical area as determined by the Department of Housing and Urban Development (HUD.) For 2016, 100% of the AMI is $90,600 for a family of four in the New York Metropolitan Statistical Area and $63,500 for an individual person.

DCP
The New York City Department of City Planning

DOB
The New York City Department of Buildings

DPR
The New York City Department of Parks and Recreation

Developer
The entity or entities selected by the City to commence negotiations regarding the development of the Site offered through this RFP. The entity or entities will provide equity, secure financing, assemble a Development Team, design, develop, build, market, and manage the Project.

Development Site
The property being offered for development under this RFP.

Development Team
The Developer and the professional, technical, and construction entities (e.g. general contractor, architect, engineer, legal counsel, marketing, and managing agents) that will participate in the design, development, construction, marketing, and/or management of the Project.

HCR
The New York State Division of Housing and Community Renewal

HDC
The New York City Housing Development Corporation

HFA
The New York State Housing Finance Agency

Negotiation Letter
The written notification sent by HPD to the Developer selected under this RFP regarding the commencement of negotiations.

Passive House
Passive House is a high performance building standard developed by the Passive House Institute (PHI) originally in 1990 and continued by the Passive House Institute US (PHIUS) in 2007. The standards focus on building components such as insulation, airtightness and heat recovery.

Principal
An individual, partnership, limited liability company, corporation, or other not-for-profit or for-profit entity that will act as the general partner, officer, or managing member of the Applicant, or any entity, known limited partner, or other member that has at least a 10% ownership interest in the Applicant.

Project
The development of affordable housing, ground-floor retail that provides local services and/or an active community facility, parking, and accessory open space envisioned for the Development Site, as well as the incorporation of GreenThumb community gardens.

Proposal
Submission from Development Team in response to this RFP.

Subordinated Debt
The amount equal to the sum of:

1. The difference between the cash portion of the purchase price paid at closing and the appraised value of the Development Site, based on an independent appraisal acceptable to HPD; plus

2. The aggregate amount of any City, State, or Federal construction subsidies for the construction of the units less the amount required to be repaid from proceeds from the sale of the units, if applicable; plus

3. Any additional value as reflected by the difference between the homeownership sales prices and the as-built market value of the Site and improvements, if applicable.

Uniform Land Use Review Procedure (ULURP)
The process, set forth in the City Charter, prescribing the City's land use review process, including public hearings and several levels of government approvals. Actions requiring ULURP include, among others, changes to the City Map, designation or change of zoning districts, Special Permits within the New York City Zoning Resolution requiring approval of the City Planning Commission (CPC), and disposition of City-owned property.

IV. THE SITE
DESCRIPTION AND CONTEXT

Community Workshop for East 111th Street Site: February 25, 2016

A. Site Description

The Development Site comprises nearly an entire block bounded by Madison and Park Avenues to the west and east, and East 111th and East 112th Streets to the south and north. Located within the East Harlem neighborhood of Manhattan's Community District 11, the Site consists of all Lots on Block 1617 except for 21 and 34, and is approximately 76,600 square feet in area. The Site is currently occupied by a baseball field, used by the East Harlem Little League, as well as GreenThumb community gardens. Four GreenThumb community gardens that are currently located on the Site will need to be integrated into any Project in response to this RFP. The East Harlem Little League will be relocated to a baseball field within the surrounding area, with the assistance of the NYC Department of Parks and Recreation.

The Site is located within the Milbank Frawley Circle-East URA, which was adopted in 1994 and initially part of the former Milbank Frawley Circle Urban Renewal Area (1967). The Urban Renewal Area was amended in 2003 to eliminate the requirement of a 100 foot building set back from Park Avenue on Site 35b. The URA is set to expire in 2034.

Current and Proposed Zoning

The Site is currently zoned R7-2 with a C1-4 commercial overlay. The intention is to rezone the block to allow for greater density. Proposals should assume an R9 zoning along Madison and Park Avenues to a depth of 100', and an R8A zoning toward the middle of the block. Proposals should also anticipate a commercial overlay change from C1-4 to C2-4 to a depth of 100'. Applicants must submit at least one proposal scenario that complies with the intended rezoning; however HPD will consider other rezoning scenarios that are accompanied by thorough justification for any proposed alternative. The rezoning will be done concurrently with the disposition action in the Uniform Land Use Review Procedure (ULURP). See *Section VI.F. Public Land Use, Zoning and Approvals* for additional information. The Site is also located in an area that is eligible for zoning and discretionary tax incentives through the FRESH program. http://www.nyc.gov/html/misc/html/2009/fresh.shtml

B. Neighborhood and Project Context

Neighborhood Land Use

The Development Site is located in the East Harlem neighborhood of Manhattan, within Community District 11. The Site is surrounded by a diverse mix of uses, including large, multi-family residential buildings, mixed-use buildings, retail, public institutions, and open space. Among the residential buildings in the immediate area is Taft Houses, a large NYCHA development located north of the Site across East 112th Street. Taft Houses is one of many NYCHA developments located nearby the Development Site, particularly along East 112th Street. To the South of the Development Site is a recently constructed, multi-family, affordable homeownership building, La Celia. Running along Park Avenue and bordering the East 111th Street Site to the East is an elevated railway for Metro North. Also known as the Viaduct, the area underneath this elevated structure has historically been an active area in East Harlem for retail. La Marqueta, located a few blocks north of the Development Site underneath the Viaduct, is a kitchen incubator and marketplace supported by NYC Economic Development Corporation that represents historic activity in this space. In terms of public facilities and institutional uses, there is a public school located on the block east of the Site, and numerous museums, including El Museo Del Barrio and the Museum of the City of New York, along 5th Avenue to the west. Central Park is located only a block to the west of the Development Site.

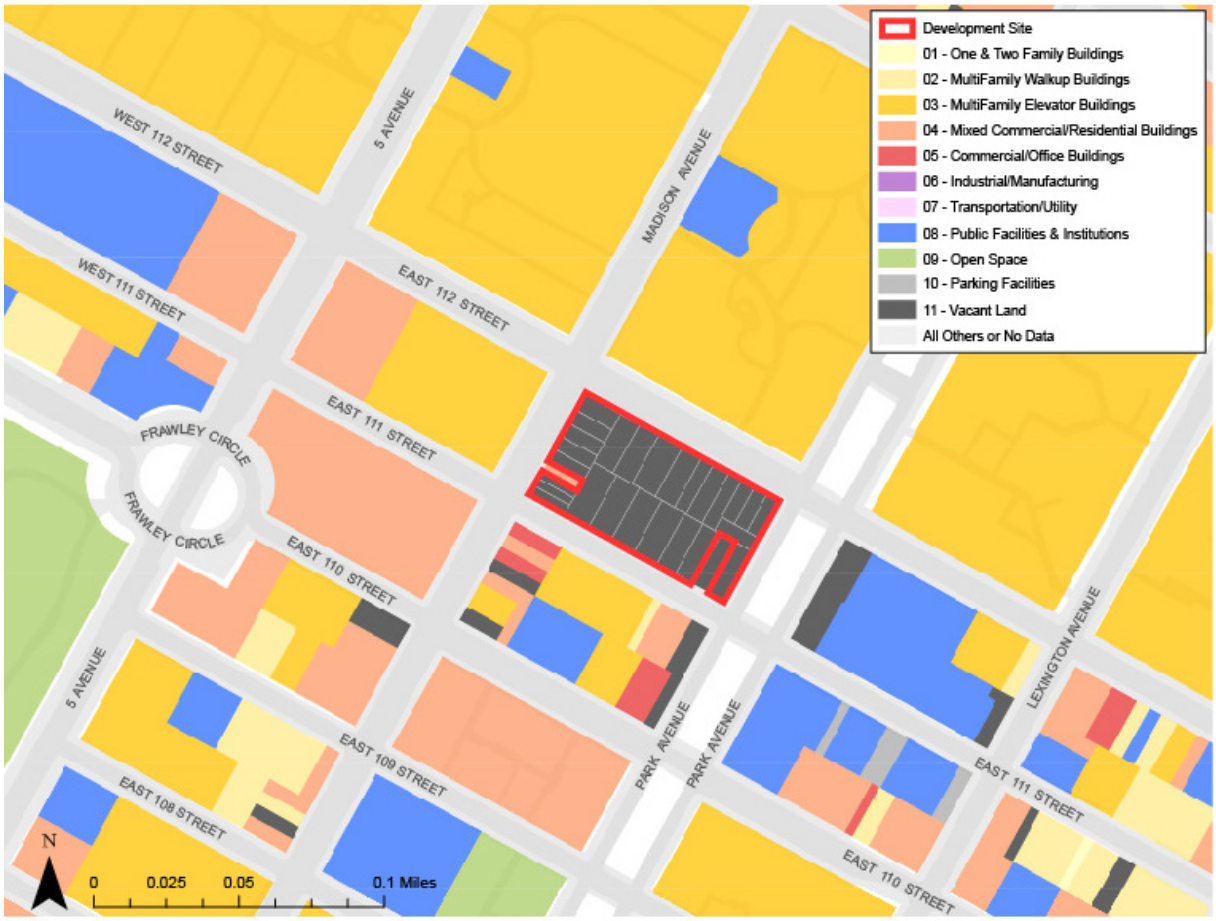

Neighborhood Access

The area is well served by public transportation. The 110th Street stop on the 6 subway line is located a block from the Site to the east, along Lexington Avenue. The Site is also close to the Central Park North stop on the 2 and 3 subway lines, which is located a few blocks to the west. Several bus lines run along Lexington Avenue and 3rd Avenue east of the site, providing service to the north and south. An additional bus hub is located one block to the south, at the intersection of East 110th Street and Madison Avenue.

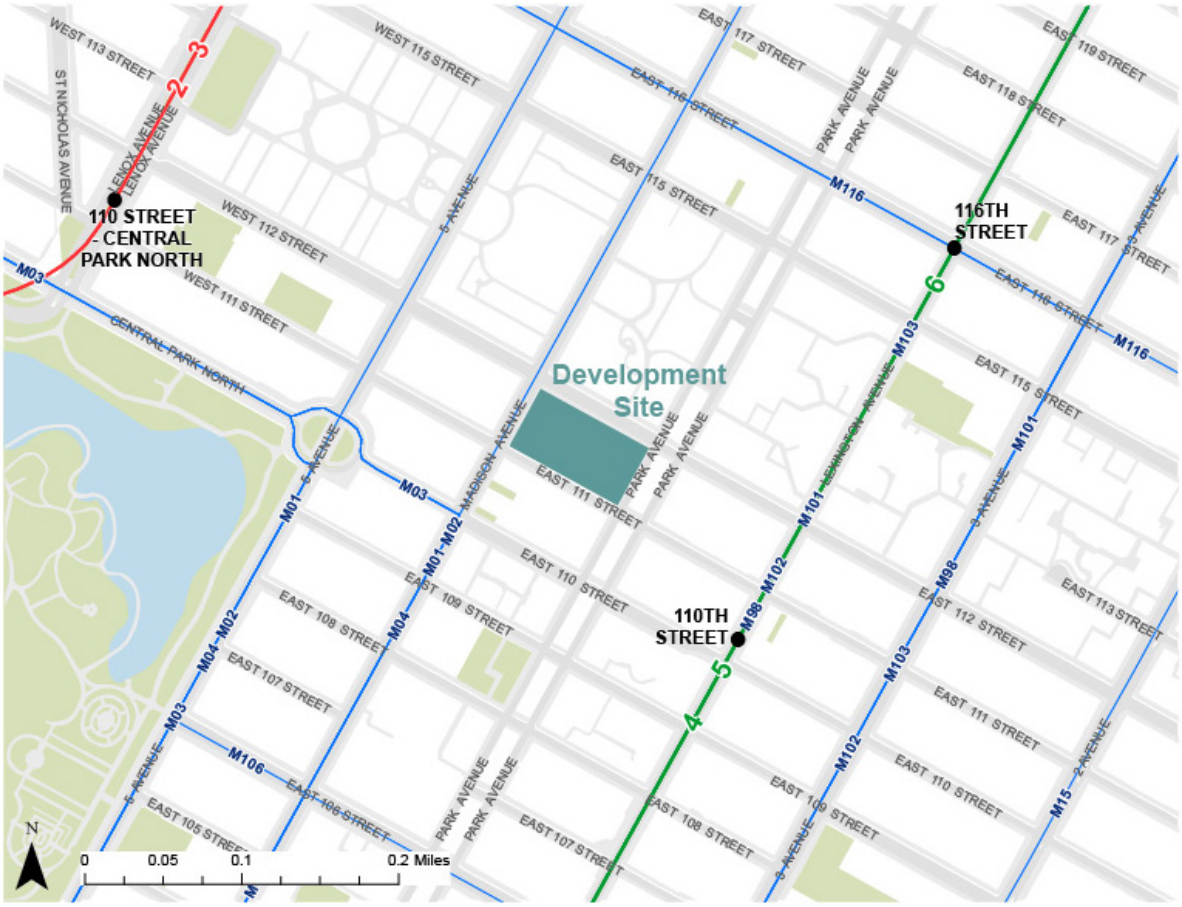

Neighborhood Demographics

HPD is committed to furthering fair housing throughout New York City neighborhoods. In order to further fair housing objectives, it is important to understand the socioeconomic dynamics at the neighborhood level. The neighborhood profile information below highlights the demographic, economic, social and housing characteristics of the East Harlem neighborhood in which the Project is located. More detailed data can be found through the Department of Health and Mental Hygiene and the Department of City Planning at the following links:

https://www1.nyc.gov/assets/doh/downloads/pdf/data/2015chp-mn11.pdf

http://www1.nyc.gov/site/planning/community/community-portal-3.page?cd=mn11

Economic Profile

a. Median Household Income

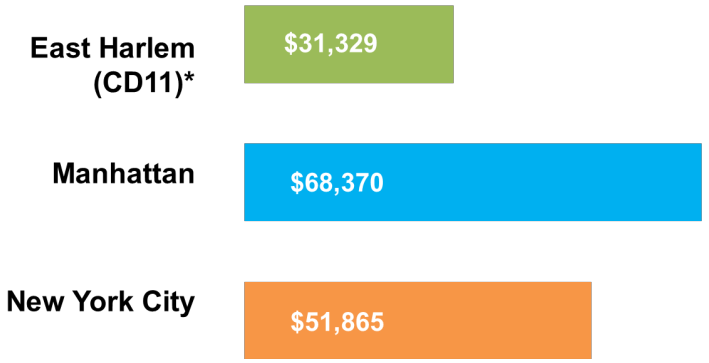

Source: US Census Bureau, ACS, 2008-2012 5 Year Estimates.
*Median household incomes in the East Harlem PUMA 3804, whose boundaries approximate CD 11

b. Area Median Income Levels

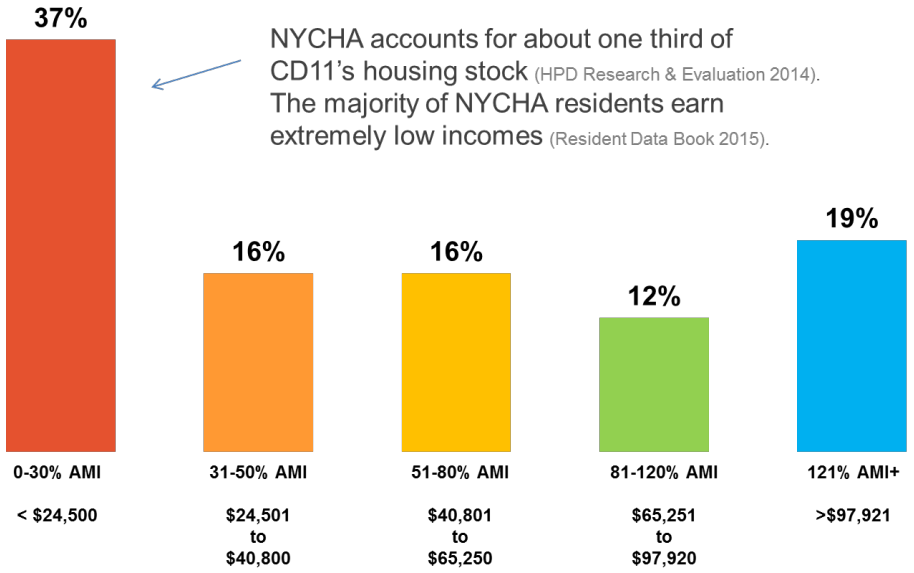

Source: US Census Bureau, ACS, 2008-2012 5 Year Estimates
Income limits are for a three-person household (HUD 2016)

Demographic Profile

a. Household Types and Sizes

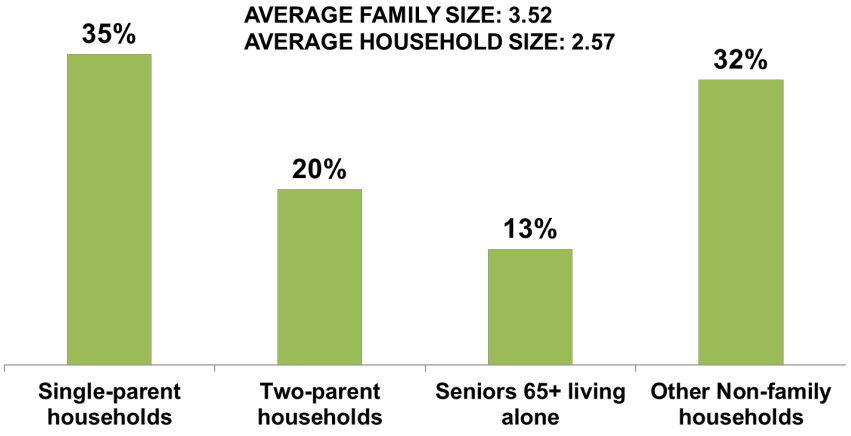

Approximate Total Households: 45,000
Source: ACS 2010-2012 3 Year Estimates
*Based on East Harlem PUMA that approximates CD 11

b. Age Composition

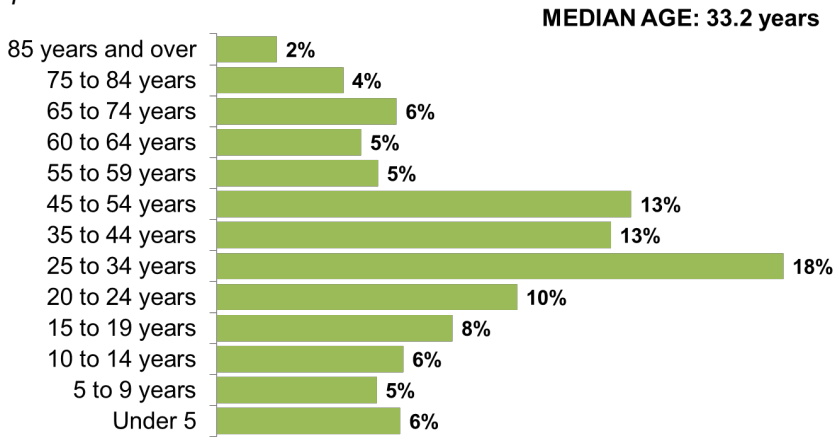

Approximate Total Number of Residents: 120,800
Source: ACS 2010-2012 3 Year Estimates
*Based on East Harlem PUMA that approximates CD 11

c. Racial/Ethnic Composition

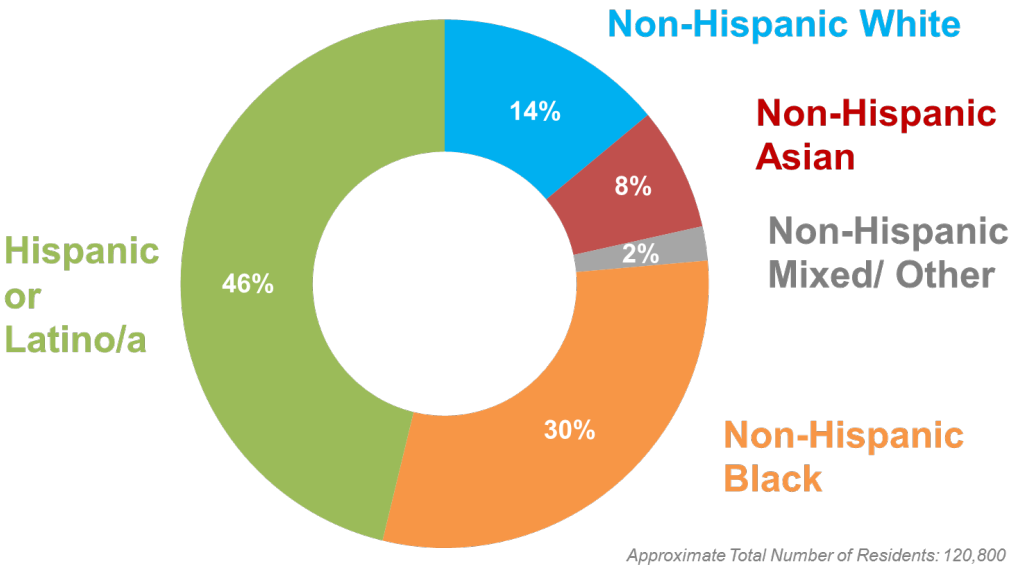

Approximate Total Number of Residents: 120,800
Source: ACS 2010-2012 3 Year Estimates
*Based on East Harlem PUMA that approximates CD 11

Housing Characteristics

a. Renters and Owners

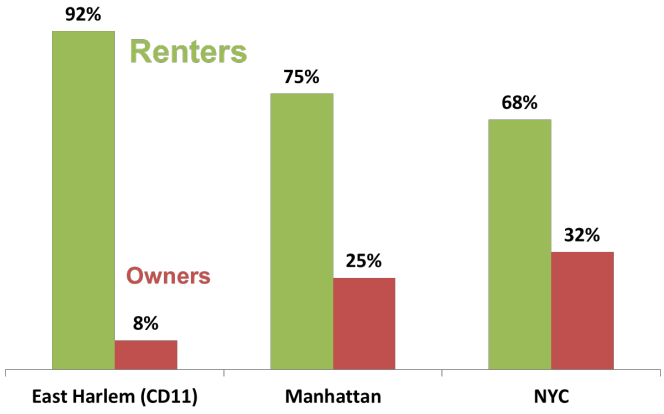

Approximate Total Occupied Residential Units: 47,000
Source: 2014 Housing and Vacancy Survey
*Based on sub-borough boundaries that approximate CD 11

b. Residential Units by Age of Building

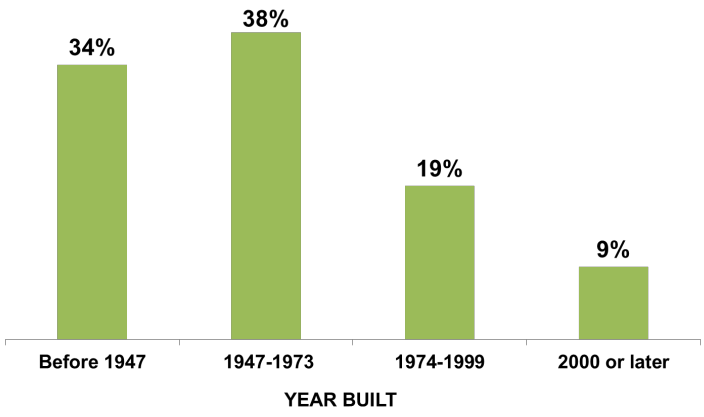

Approximate Total Occupied Residential Units: 47,000
Source: 2014 Housing and Vacancy Survey
*Based on sub-borough boundaries that approximate CD 11

c. Residential Units by Building Size

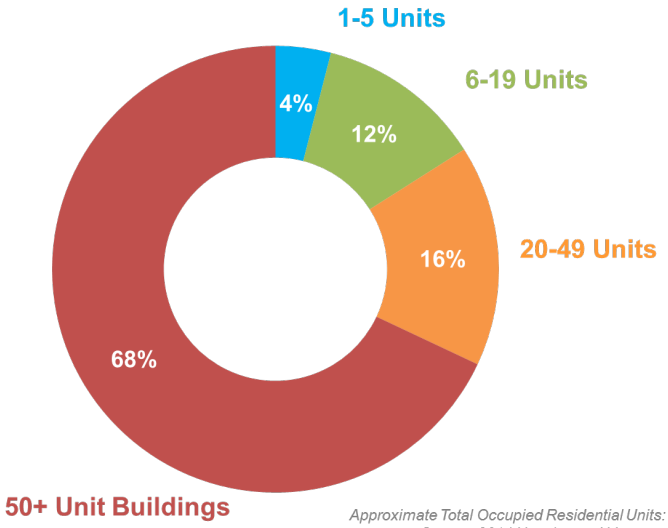

Approximate Total Occupied Residential Units: 47,000
Source: 2014 Housing and Vacancy Survey
*Based on sub-borough boundaries that approximate CD 11

d. Residential Units by Regulatory Status

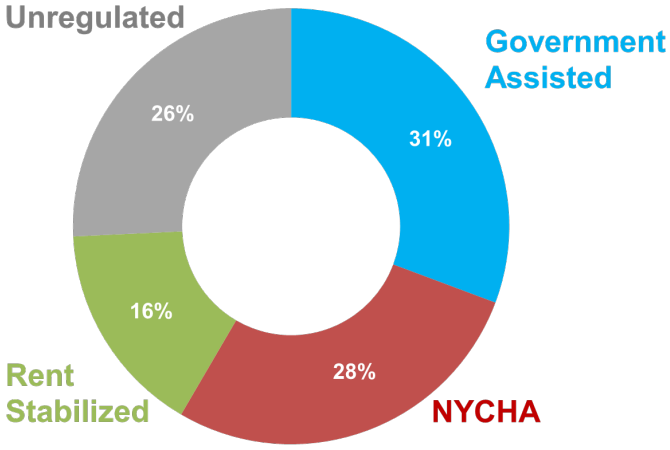

Approximate Total *Residential Units: 55,000*
Source: HPD Division of Research and Evaluation 2014
*Based on sub-borough boundaries that approximate CD 11

V. DEVELOPMENT PROGRAM
GOALS, REQUIREMENTS, GUIDELINES

Community Workshop for East 111th Street Site: February 25, 2016

A. Development Goals

There are three goals for the East 111th Street development. The goals are consistent with the city's commitment to equity, economy, and the environment:

Equity: The project must be entirely affordable and include residential units that are affordable to a mix of household incomes that meet the needs, and contribute to the diversity, of the community. Community facilities, open spaces, and neighborhood serving commercial uses should be accessible to the community.

Economy: The project must be economically viable to ensure that long-term management and maintenance, as well as affordability, is sustainable during and beyond the regulatory restriction periods.

Environment: The project must be designed to achieve exemplary energy and health performance standards to create high quality residential and urban environments, and to reduce standard energy and water consumption, thereby reducing long-term operating expenses for residents and the building.

To achieve these goals, the submission must include the Requirements outlined in the following section. In addition, Preferences are provided to guide the development program and design, and enhance the quality of RFP Submissions. Proposals that are responsive to these Preferences will be more competitive during the RFP Review stages.

B. Development Program Requirements and Preferences

Residential Component

- Proposals must include housing units affordable to a mix of household incomes. Preference will be given to Proposals that include a significant proportion of units that serve very low and low-income households. In addition, Preference will be given to Proposals that effectively leverage, and limit the amount of, HPD subsidy to achieve maximum affordability levels.

- Proposals must have a distribution of unit types and sizes that is consistent with current HPD term sheets and design guidelines.

- Units must remain in the rent regulation system for the duration of the Project or as required by law, but in no case less than thirty (30) years. Preference will be given to Proposals that include a viable plan to extend affordability beyond the regulatory restriction period. (See *Section X.A. Tab K*).

- Proposals must explain how the Project affirmatively furthers fair housing. See *http://portal.hud.gov/hudportal/HUD?src=/program_offices/fair_housing_equal_opp/promotingfh*

Commercial and Community Facility Space, if applicable

- Proposals should include ground-floor commercial uses, such as a mix of retail and community facility uses that will respond to the community needs and activate commercial activities along the corridor, as well as add to and enhance the current inventory of community uses and spaces available in the neighborhood. Proposals must include a detailed commercial and/or community facility plan, including an attraction and retention strategy, leasing terms, and operations plan. (See *Section X.A. Tab M).*

- Preference will be given to Proposals that evaluate the need for access to affordable fresh groceries, and, if applicable, effectively use the FRESH program and other business incentive programs.

- The Developer must finish the commercial space to a level approved by HPD, and provide for tenant improvement terms in the Proposal, which will be specified in negotiations between HPD and the Developer. The Development Team may propose a leasing and management agent of the commercial space. The costs and sources to support such an arrangement should be detailed in the Proposal.

Open Spaces and Community Gardens

- Proposals must comply with standard open space requirements pursuant to the New York City Zoning Resolution.

- Proposals must integrate four existing community gardens into the Site plan, which will be transferred to the NYC Department of Parks and Recreation – GreenThumb Program, to be permanently operated as community gardens (http://www.greenthumbnyc.org). Other Requirements and Preferences for the GreenThumb community gardens include:

- The total square footage of the new GreenThumb community gardens shall not be less than the square footage pursuant to the current license agreement between HPD and the gardeners, and no greater than the space they are currently occupying for garden purposes (Jan-2016). Preference will be given to proposals that use the space efficiently, but not excessively, that facilitate the health and vibrancy of the gardens.

- At a minimum, Proposals must ensure that the GreenThumb community gardens have secure access from/to public right of ways, adequate sunlight, and basic gardening infrastructure (water, electricity, lighting, fencing). Page 9 of Appendix B lists threshold requirements, or items necessary for the gardens to function, for the redevelopment of the community gardens. Capital development budgets should assume $125,000 to incorporate this basic gardening infrastructure. However, a Project may propose a lower development budget for the community gardens, as long as the threshold requirements are being met and the development budget includes a more detailed cost breakdown. Any annual utility costs associated with these basic gardener needs should be included as maintenance and operating expenses in the Financing Proposal (Form K).

- Preference will be given to Proposals that are responsive to the priorities identified by the community gardeners. (See *Appendix B*)

- Preference will be given to Proposals that include a landscape architect or other team member with experience in designing, programming, and space planning community gardens with community gardeners. The selected development team will be required to engage the community gardeners to incorporate as many of the garden priority items, as feasible, into the on-site garden spaces. (See *Appendix B*)

Community Priorities

Preference will be given to Proposals that incorporate community priorities that were identified through the community visioning workshop and outreach, as well as the East Harlem Neighborhood Plan, which includes recommendations for public sites.

- *Appendix A* provides a detailed overview of HPD's community outreach related to the East 111th Street Site, and the community priorities that emerged through this engagement process.

- The East Harlem Neighborhood Plan is attached to this RFP as *Appendix C*.

C. Architectural and Site Design

The architectural and urban designs should be exemplary in aesthetic quality, and incorporate environmental and healthy living design features. Preference will be given to Proposals that demonstrate the capacity of designs to reduce water and energy consumption, create possibilities for green infrastructure to manage storm water and heat island impacts, enhance the overall pedestrian and urban experience, increase safety, strengthen neighborhood residential and commercial corridors, and enhance the overall architectural and urban design context of the neighborhood. In addition, Proposals are encouraged to incorporate active and universal designs aimed at increasing community health, accessibility, and well-being of residents.

Design Requirements

Passive House

The Proposal must meet basic Passive House design, construction, and operating standards. Appendix D provides more detail about the building standard, design guidelines, and certification process associated with Passive House. Outlined below are the specific requirements and guidelines related to the Passive House component of the East 111th Street RFP.

- If selected for the Project, Applicants are required to pursue and submit an application for Passive House certification through the Passive House Institute (PHI) or the Passive House Institute US (PHIUS).

- Each Project requires a member of the Development Team to be certified by PHI or PHIUS. This could be a traditional member of a Development Team or a certified Passive House consultant. Preference will be given to Proposals that have additional members of the Development Team that are Passive House-certified. Acceptable certifications include:
    - PHIUS Certified Passive House Consultant (CPHC®)
    - PHIUS Certified Builders Training
    - PHIUS+ Large Building Verifier Training
    - PHI Certified Passive House Consultant & Designer (CPHC&D)
    - PHI Certified Passive House Tradesperson- Building Envelope (CPHT-BE)
    - PHI Certified Passive House Tradesperson- Mechanical Building Services (CPHT-MBS)

- Applicants must discuss their plan for achieving Passive House certification in their Sustainability Narrative within Tab I. The narrative should convey an understanding of Passive House principles and the likely issues to navigate in implementing a Passive House building. This should include, but is not limited to, an overview of the Development Team experience with Passive House, a general plan for quality control during the construction process, a description of the building façade materials, and a discussion of long-term maintenance and capital replacement costs.

- Preference will be given to Development Teams with experience developing certified projects through Enterprise Green Communities, USGBC LEED, Energy Star or Passive House. Proposals that are selected as finalists for this RFP through the competitive review process will be required to provide a basic feasibility assessment of their Passive House design. This would involve a preliminary model to ensure that the Project design is on a path to achieving Passive House certification. These feasibility assessments will provide information on anticipated building performance, which will allow teams to make decisions on general mechanical systems and better cost estimates.

    - Finalists pursuing certification under PHI will be required to submit a preliminary model of the design through designPH.

- Finalists pursuing certification under PHIUS will be required to submit a preliminary feasibility study performed by PHIUS. Teams will need the following information in order to submit to PHIUS for the feasibility study:
    1. Simplified Sketch-up model or Revit model of the envelope
    2. Number of units
    3. Unit sizes
    4. Floor area

- If selected for the Project, the Developer will be required to participate in a study commissioned by NYSERDA to document and assess the Passive House construction process. Upon request by HPD or NYSERDA, the Developer must periodically provide budgets that identify project costs specifically related to green design, energy efficiency measures on an itemized basis and building operations.

Site-Specific Guidelines: Building Massing and Streetscape

- The base of the building should address the pedestrian scale by defining a clear street wall with active uses, multiple pedestrian entrances, transparency, and/or other material articulation and depth to activate the abutting sidewalks and enhance the pedestrian experience. Large areas of blank wall should be avoided.

- Proposals should incorporate active ground floor uses fronting on Madison Avenue and, depending on the location of the GreenThumb community gardens, potentially on Park Avenue.

- Building frontage should have at least 70% glazing for non-residential uses, from 2 feet to 10 feet above the sidewalk elevation, and wrapping at the corners wherever there is ground floor retail use. A minimum ground floor-to-floor height of 15' is required.

- Noise attenuation measures should be incorporated, particularly along Park Avenue.

- The Site has long, full block frontages along East 111th and East 112th. Designs are to incorporate architectural and urban design elements that respond to and enhance the character of the built environment in the context of the Site. The design should ensure that the building creates variation along the street through the use of scale and massing, setbacks and shifts in façade, rhythm and use of architectural elements, fenestration patterns, materials and color. Reducing the monolithic character is preferred at both the horizontal and vertical planes. Proposals should consider how the building(s) and site design might be, or at least read like multiple parcels with variation, views, and interests to create a safe and friendly pedestrian experience.

Enterprise Green Communities

Proposals must achieve Certification through Enterprise Green Communities Criteria, which is a comprehensive green building framework for affordable housing that provides cost-effective standards for creating healthy and energy-efficient homes. Enterprise Green Communities offers an online certification process for affordable housing developments built using these criteria. All new construction and substantial rehabilitation projects receiving funding from HPD are required to comply with the 2015 New York City Overlay of the Enterprise Green Communities Criteria. The Overlay can be found in *Appendix G*. Detailed instructions on using the HPD Overlay can be found at: http://www1.nyc.gov/site/hpd/developers/green-building.page

With the release of the 2015 Enterprise Green Communities Criteria, a pathway for Passive House has been incorporated. The Project would follow the submission protocols laid out by the respective Passive House certification body in lieu of the ENERGY STAR Multifamily High-Rise requirement usually required for Green Communities Certification (criterion 5.1b).

In addition to the documentation requirements of the Green Communities Program, the designated Developer will be required to participate in a study commissioned by NYSERDA to document and assess the Passive House construction process. Upon request by HPD or NYSERDA, the developer must periodically provide budgets that identify project costs specifically related to green design, energy efficiency measures on an itemized basis and building operations.

Laying the Groundwork Guidelines

Laying the Groundwork is a set of guidelines for designing efficient, flexible ground-floor space for retail and other ground-floor uses in mixed-use affordable housing developments. The goal of the guidelines is to provide practical recommendations for building ground-floor space that is functional for retailers and community and cultural organizations while able to meet and evolve with community needs. All proposals for this RFP must comply with the critical success factors in the Laying the Groundwork guidelines. Compliance with other aspects of the Guidelines is encouraged. The guidelines can be found in *Appendix F*.

HPD, NYC and Federal Code and Guidelines

The following are required in the design of all Proposals in connection with this RFP. Current, most up to date approved guidelines, regulations, and codes shall apply.

NYC and Federal Requirements

- New York City Zoning Resolution
    - Mandatory Inclusionary Housing
    - Zoning for Quality and Affordability
- New York City Construction Codes
- Multiple Dwelling Law
- Fair Housing Act
- Section 504 of the Rehabilitation Act of 1973 and Accessibility Requirements
- Americans for Disability Act, as applicable

HPD Requirements

- HPD Design Guidelines for Multifamily New Construction and Senior Housing, http://www1.nyc.gov/assets/hpd/downloads/pdf/HPD-Design-Guidelines.pdf
- Enterprise Green Communities Criteria Certification Overlay for NYC HPD Projects, http://www1.nyc.gov/site/hpd/Sponsors/green-building.page
- The 'Critical Success Factors' enumerated in *Laying the Groundwork: Design Guidelines and Other Ground-Floor Uses in Affordable Housing Developments*, http://www1.nyc.gov/site/hpd/Sponsors/laying-the-groundwork.page

Design Preferences

Preference will be given to Proposals that affirmatively include elements provided in the following design guidelines and resources.

- Active Design Guidelines, http://centerforactivedesign.org/guidelines/
    - Supplement: Affordable Designs for Affordable Housing
    - Supplement: Promoting Safety
    - Supplement: Shaping the Sidewalk Experience
- Universal Design, http://www.nyc.gov/html/ddc/downloads/pdf/udny/udny2.pdf
- Sustainable Urban Site Design, http://www1.nyc.gov/assets/ddc/downloads/Sustainable/sustainable-urban-site-design-manual.pdf
- NYC Department of Design and Construction Resources, http://www1.nyc.gov/site/ddc/resources/publications.page

VI. SCOPE
DEVELOPER OBLIGATIONS

Community Workshop for East 111th Street Site: February 25, 2016

A. Development Team and Project Management

The Developer will be responsible for assembling a Development Team, including, at a minimum, a contractor, architect/planner, marketing agent, managing agent (if applicable). The Development Team will design, construct, and lease (and/or sell) the completed units. A Certified Passive House Consultant will be considered part of the Development Team. Upon designation, the contractor and key personnel involved with the construction of the building must attend a Certified Passive House Tradesperson training offered by PHIUS or PHI and obtain a certificate of completion.

The Developer is responsible for articulating a clear project management approach to the public/private partnership and the development project with the objective of ensuring transparent information, project governance, smooth negotiations and communications, as well as risk management and quality control. The Developer should discuss any project management systems or tools that will be used, and detail any experience with these methods.

The Developer is responsible for arranging timely commencement and completion of the Project, and will be held accountable for the schedules outlined in the Proposal and agreed upon with HPD. The Developer will be required to submit ongoing status reports regarding Project development, financing, budget, schedule, marketing, leasing, and management.

B. Community Outreach

The Developer will participate in required public forums, hearings, and briefings with the Community Board, elected officials, City agencies, and other organizations, as determined necessary by HPD. Specific to this Project, the Developer will be required to facilitate planning meetings with the community gardeners that will be relocated on the Site, along with staff from the GreenThumb Program, as well as with the Community Board 11 Working Group related to the goals, plans, and status of the Project.

C. Design Requirements and Guidelines

In compliance to the Design Requirements and Guidelines included in this RFP, and within six (6) months of selection, the Developer must complete a set of schematic site plans, floor plans, and elevations that include any modifications to the original plans included in the Proposal in response to this RFP, as agreed upon by HPD and the Developer, and submit them to HPD for review and approval. Prior to disposition, the Developer must submit a complete set of final site plans, floor plans, elevations, samples of exterior building materials, detailed specifications, and the Passive House pre-certification certificate to HPD for review.

D. Development Program

The Developer is responsible for ensuring that the Development Program Requirements, and to the greatest extent possible and feasible Program Preferences are incorporated into the Proposal.

E. Environmental Review

The Developer will be responsible for preparing and submitting an Environmental Assessment Statement (EAS) in accordance with the guidelines contained in the latest edition of City Environmental Quality Review (CEQR) Technical Manual, including an EAS form, graphics and technical assessments and appendices, as necessary. It is anticipated that HPD will serve as the lead agency for the CEQR review and will oversee the preparation of all CEQR documentation; however, the Developer will be responsible for retaining a reputable environmental consultant, preparing and submitting all CEQR documents, and funding the cost of the studies and analysis required for completion of CEQR. The CEQR assessment will consider the discretionary ULURP approvals described below. The Developer will be solely responsible for any mitigation measures identified as a result of the CEQR review.

In addition, the Developer will be responsible for preparing associated environmental studies which could include, but are not limited to Phase I and Phase II Environmental Site Assessments (ESA), Phase IA archaeological assessments and noise/acoustical studies. The Developer will be responsible for implementing any remedial measures identified in connection with the redevelopment of the Site as determined by HPD. HPD does not make any representation or warranty whatsoever regarding the condition of the property or the suitability of the property for the uses contemplated by this RFP. The Developer will be solely responsible for providing engineering and institutional controls to allow for the re-use of the Site.

F. Public Land Use, Zoning and Approvals

HPD will be the applicant for the Uniform Land Use Review Procedure (ULURP) application, with assistance from the Developer in preparing the supporting documentation for the application. The Project will also require City Council and Mayoral approval. Anticipated land use actions requiring

approval under ULURP for development of the Site include a zoning map change, the disposition of City-owned property, and the designation of the Development Site as an Urban Development Action Area Project.

Applicants should be advised that their development timeline should take into account the period required for the ULURP application to be certified and approved. HPD design approval and ULURP (including certification) may take at least one (1) year from commencement. In addition, the Developer may be required to alter the design Proposal before and during the ULURP process to comply with any request for modifications.

G. Financing

See *Section VII: Financing and Affordability*.

H. Disposition and Disposition Price

Disposition of the Development Site to the Developer will be subject to the following:

- Receipt of all public approvals required for disposition of the Site and development of the proposed Project on such Site, including without limitation, approval by the Mayor.
- Execution and delivery of the documents necessary to complete the disposition process within a time period specified by HPD. These documents include, but are not limited to, a Land Disposition Agreement ("LDA"), as required.
- The Site will be conveyed in accordance with the terms of the LDA to be entered into between the Developer and HPD and will be conveyed in "as-is" condition, including without limitation, all environmental conditions and hazards. The LDA will contain covenants running with the land that require the Developer to develop the Site in accordance with plans and specifications determined and approved by HPD.
- The simultaneous closing of a bona fide construction loan required to finance the full development of the Site.

I. Construction

The Developer is responsible for overseeing the design, bidding, and construction process generally described below:

Bidding and Contracting. The Developer is responsible for managing all phases of the design process to ensure the implementation of integrated design strategies to achieve high performing buildings and sites. The Developer is responsible for ensuring competitive construction pricing and delivery to make certain that the building is deliverable according to the Development Project budget and schedule, which shall be consistent with HPD term sheets and agreements.

The Developer is responsible for procuring and managing the construction of the Project, and ensuring smooth negotiations and contracting with any sub-contractors for the construction and operations of the completed development.

Completion and Close-out. The Developer is responsible for implementing all professional industry standard practices in construction monitoring, construction completion, compiling all warrantees and guarantees, any applicable commissioning, and transferring the completed building to property

management and maintenance personnel, and coordination with HPD marketing departments as units are completed and ready for leasing or sales.

J. Marketing, Sales/ Leasing

Marketing of the rental, retail and sale of the homeownership units, if applicable, is the sole responsibility of the Development Team. In carrying out these functions, the Developer must comply with HPD and HDC's marketing requirements, which are designed to ensure that the availability of the units is disseminated as widely and fairly as possible. The Development team must also comply with tenant/household preferences included in HPD and HDC's marketing requirements. The rent and/or sales prices of the units projected in the Proposal are to be determined by the Developer in accordance with HPD, as stated in applicable term sheets or otherwise. The marketing of the units will be monitored by HPD staff to ensure compliance with these requirements. The HPD-HDC Marketing Guidelines will be part of the LDA that the Developer will execute. (See *Appendix H).*

The Developer must comply with the applicable term sheet income tiers in connection with developing operating budgets for the Project. The City is committed to widening opportunities for affordable housing for all New Yorkers. Please note that all applicants, regardless of preference, must meet the income, employment, and other eligibility criteria set for each property for which they are applying.

K. Operating Rents – Rent Stabilization

The Developer is responsible for ensuring that initial rents will be established in accordance with the regulatory agreement consistent with the income requirements outlined in this RFP. Prior to initial occupancy all units must be entered into the New York State Rent Stabilization system at rents specified in the regulatory agreement. Units must remain in the system for the duration of the Project or as required by law, but in no case less than thirty (30) years. The Developer may submit a proposal to extend the affordability period for an additional number of years in Tab K – Financing Proposal (See *Section X.A. Tab K*). Preference will be given to Proposals that include an extended affordability period and present feasible plan.

L. Property Management and Maintenance

The Developer is responsible for providing professional property management services, and having all standard asset management systems in-place to qualify income levels pursuant to funding requirements, as well as to submit property management data and operating budgets to HPD, upon request.

The Developer is responsible for professional maintenance services, as well as supporting or facilitating resident programming and community rules that promote health, safety, and quality of life at the Project.

M. Local Hiring / HireNYC

Proposals must have a plan for outreach to residents of the Community District within which the proposed project is located related to employment opportunities generated by the proposed project including training programs, job placement activities, Applicants' own staffing practices, and/or Applicants' contracting practices on the proposed project. Proposals will be evaluated on the strength of the plan.

The Developer, General Contractor, and certain Subcontractors will be required to participate in *HireNYC*, a workforce development program which connects the City's real estate development projects to the City's workforce development services. Development partners will be required to enroll with Workforce1 through an on-line system hosted by the Department of Small Business Services, to share job openings in entry-and mid-level construction positions with Workforce 1, and to interview the qualified candidates that Workforce 1 refers for those openings. For more information about *HireNYC*, go to the following links:

http://www1.nyc.gov/site/hpd/developers/HireNYC.page

http://www.nyc.gov/html/sbs/wf1/html/contact/targeted_hiring.shtml

VII. FINANCING AND AFFORDABILITY
GENERAL TERMS

Community Workshop for East 111th Street Site: February 25, 2016

The Site is expected to be conveyed to the selected Developer for a nominal price of $1.00 per tax lot. In addition, the Developer will deliver an enforcement note and mortgage in the amount equal to the appraised value of the land, which may be payable at maturity. City, State, and/or Federal subsides may be available to enhance housing affordability. Proposals must comply with all the terms of any subsidy programs that are utilized. Applicants are responsible for securing all necessary construction and permanent sources of financing.

A. Financing

It is the responsibility of the Developer to obtain construction and permanent financing from lenders in amounts consistent with the Proposal. Developers may use different lenders for construction and permanent financing. The amount of the Developer's equity will be determined by the lender(s). The Developer will be required to submit a term sheet and letter of intent from a lender indicating willingness to lend an amount for construction financing of the Project within a period of time to be defined in a Negotiation Letter executed upon the selection of the Developer.

Proposals must include a primary financing scenario that does not propose competitive financing sources from Federal, State or City governments including but not limited to HCR or HPD 9% Low Income Housing Tax Credits or any other programs offered by HFA, HCR, or HPD. As-of-right 4% tax credits are not considered competitive.

Developers may propose additional subsidy sources. Competitive subsidy sources, if proposed, must be included in an alternative financing scenario, separate from the primary non-competitive financing scenario. Proposals should aim at maximum leverage of private and other public subsidy financing. Proposals will be evaluated based on the leveraging of funding sources and efficiency of proposed financing plans. Preference will be given to Proposals that maximize affordability with the least amount of subsidy.

The Developer must provide an equity contribution in the form of cash and/or payment of pre-development costs, secure necessary construction and permanent financing, provide guarantees if required, and meet any other terms and conditions as required by HPD, other lenders, and/or investors.

For more information, refer to:

- *Section X.A. and Tab L – Financing Letters of Interest* for information on letters of interest from lenders.

B. Transfer Taxes and Disposition Price

The Developer will pay all transfer taxes associated with the conveyance of the Site to the Developer, and all transfer and recording taxes associated with project financing.

Upon conveyance, it is expected that the Developer will pay a nominal disposition price of $1.00 per lot and will deliver an enforcement note and mortgage in the amount equal to the appraised value of the land, which may be payable at maturity.

C. HPD – HDC Term Sheets

Proposals must comply with all terms of any HPD subsidy program utilized. Please refer to http://www1.nyc.gov/site/hpd/developers/term-sheets.page for further information and program term sheets.

Proposals that assume HDC bond financing (and subsidy financing, if applicable) must comply with all terms of the applicable HDC term sheet. Please refer to http://www.nychdc.com/pages/Termsheets.html for further information and program term sheets.

D. Other Funding Programs

NYSERDA

The NYSERDA Multifamily New Construction Program offers support for Passive House buildings. Please refer to http://www.nyserda.ny.gov/-/media/Files/About/Clean-Energy-Fund/CEF-Resource-Acquisition-Transition-Chapter.pdf for further information. The multifamily new construction program is referenced on pages 63-71. Additional support will be offered for Passive House buildings also pursuing renewables in the tier 3 level of subsidy.

Commercial & Retail Incentives

The following retail incentive programs may be available:

- New York City Economic Development Corporation (NYCEDC)'s guide to financing and incentives can be found at: http://www.nycedc.com/FinancingIncentives/Pages/FinancingIncentives.aspx.

- Food Retail Expansion to Support Health (FRESH) Program: promotes the establishment and retention of neighborhood grocery stores in underserved communities by providing zoning and financial incentives to eligible grocery store operators and developers.

- NYC EDC Capital Access Loan Guaranty Program: Provides up to a 40 percent guarantee on loans for qualified NYC micro (under 20 employees) and small (21-100) businesses experiencing difficulty in accessing loans.

- NY Healthy Food & Healthy Communities Fund: A $30 million statewide program created to provide grants and loans for food markets in underserved communities. Information on this program is available at: http://www.liifund.org/products/community-capital/capital-for-healthy-food/new-york-healthy-food-healthy-communities-fund/

- New Market Tax Credits: The NMTC Program attracts investment capital to low-income communities by permitting individual and corporate investors to receive a tax credit against their Federal income tax return in exchange for making equity investments in specialized financial institutions called Community Development Entities (CDEs).

E. Real Property Taxes and Exemptions

The Development Site will be subject to New York City real property taxes and charges. However, the tax exemptions described below may be available for eligible projects. Specific benefits may vary depending on characteristics of the project. For details of each program, it is necessary to consult the relevant statute and rules. Applicants should indicate in the Project Narrative which tax exemption program(s), if any, they plan to utilize. It is the responsibility of the Developer to apply for and meet the requirements of the specific tax benefit program(s). HPD makes no representations or warranties as to the continued availability of these benefits or as to the Project's eligibility to receive these benefits.

The Urban Development Action Area Program ("UDAAP") tax exemption is subject to approval by the City Council. The City Council may grant an exemption from the New York City real property taxes on the buildings/improvements for up to twenty (20) years. If the Council grants the full 20-year exemption, the improvements on the Site would be fully exempt from the New York City real property taxes on the buildings/improvements for the first ten (10) years with a gradual phase-in of full taxes over the remaining ten (10) years (10% per year). The full amount of the New York City real property taxes on the land must be paid each year.

The 420-c tax exemption provides an exemption from New York City real property taxes for up to sixty (60) years for housing financed or previously financed in part with Federal Low Income Housing Tax Credits. In order to be eligible for this tax exemption, at least 70% of the units must be subject to the income and occupancy requirements of Internal Revenue Code Section 42. Projects must be owned or leased for at least thirty (30) years by a corporation, partnership, or limited liability company, of which at least fifty percent (50%) of the controlling interest is held by a charitable organization with 501(c)(3) or (4) tax exempt status whose purposes include the provision of low income housing, or a wholly-owned and wholly-controlled subsidiary of such a charitable organization. HPD must approve the regulatory agreement that imposes tax credit restrictions on the project's dwelling units and may also require a payment in lieu of taxes (PILOT.)

The 420-a tax exemption program provides a full exemption from New York City real property taxes for certain property owned by eligible not-for-profit institutions. If the community facility is the only portion of the Project that will receive a 420-a tax exemption, it must be in a separately assessed tax lot from the rest of the Project.

The Article XI tax exemption provides a complete or partial tax exemption from New York City real property taxes for up to 40 years for the new construction or rehabilitation of affordable housing carried out by a Housing Development Fund Company (HDFC). An HDFC is a corporation formed

under Article XI of the Private Housing Finance Law to build and operate low-income housing. The formation of each HDFC which is a sponsor of an HPD project is individually approved by HPD.

Please refer to http://www1.nyc.gov/site/hpd/developers/tax-incentives.page for further information

F. Resale, Refinancing, and Recapture Restrictions

Residential Rental Component. The portion of the HPD enforcement mortgage attributable to any residential rental component of the Project is subject to repayment from refinancing and resale profits, and is non-evaporating.

Homeownership Component (if applicable). Homeowners must agree to occupy the multi-family unit as a primary residence for 15 years following the initial purchase of the home. The HPD enforcement mortgage will be converted into an obligation of purchasers who acquire the units. The debt will be apportioned for each according to a formula determined by HPD.

Upon resale or refinancing, initial purchasers and subsequent owners may be required to make payments to the City out of resale profits and refinancing proceeds, where applicable. The use and recapture of any State and Federal funds will be guided by the specific guidelines for such funding source.

Retail/Commercial and Community Facility Components. The portion of the HPD enforcement mortgage attributable to the retail/commercial and community facility components of the Project is repayable from refinancing and resale profits, and is generally non-evaporating and non-extinguishing.

VIII. ADDITIONAL REGULATIONS AND REQUIREMENTS

A. Fair Housing Requirements

The Developer is required to comply with all applicable Federal, State, and local laws, orders, and regulations prohibiting housing discrimination.

B. Warranty Coverage

Units must be sold with a warranty that is the same as the housing merchant implied warranty described in Section 777(a) of the New York State General Business Law. The warranty shall be applied to all units, regardless of the number of stories of the building in which they are located, and may not be limited, modified, or excluded by the methods provided for in Section 777(b).

C. Section 3 Clause

The project resulting from this RFP may be subject to Section 3 of the Housing and Urban Development Act of 1968 (12 U.S.C. 1701u) and the implementing regulations at 24 CFR part 135. If applicable to the project, (i) to the greatest extent feasible, opportunities for training and employment arising in connection with the planning and carrying out of the project must be given to "Section 3 Residents" as such term is defined in 24 CFR 135.5; and (ii) to the greatest extent feasible, contracts for work to be performed in connection with any such project must be awarded to "Section 3 Business Concerns" as such term is defined in 24 CFR part 135.5.

D. HOME Funds and Davis-Bacon

Every contract for the construction of housing (rehabilitation of new) that contains 12 or more units assisted with Federal HOME funds will be required to comply with Davis-Bacon and the Contract Work Hours and Safety Standards Acts.

E. Equal Opportunity

Agreements resulting from this RFP will be subject to the provisions of Executive Order 50 and its implementing regulations as stated in *Appendix I (Equal Opportunity).* A representative from the Developer and each entity with which the Developer partners will be required to attend a class administered by HPD outlining the requirements of Executive Order 50 and to submit Equal Opportunity forms provided by HPD verifying their compliance with its provisions.

IX. DEVELOPER SELECTION PROCESS

Community Workshop for East 111th Street Site: February 25, 2016

A. Review

HPD will evaluate each Proposal and each Applicant according to the threshold requirements ("Threshold Requirements") below, taking into account the information provided in the Proposal, references, and any other available information about the Applicant's performance. Proposals that are not complete or do not conform to the requirements of this RFP will be eliminated from further consideration, unless HPD permits the Applicant to correct the omission (see subsection B below).

Proposals that meet all Threshold Requirements will be comprehensively evaluated, rated, and ranked according to the competitive selection criteria ("Competitive Selection Criteria") below. HPD may request additional information, interviews, presentations, or site visits. The selected Applicant will be chosen from among the highest rated and ranked Proposals. HPD may disapprove the inclusion of any member of an Applicant's Development Team and/or require the selected Applicant to substitute other individuals or firms.

B. Threshold Requirements

Completeness of Proposal

The Applicant must submit a Proposal that contains all documentation required under *Section X.A Submission Information and Requirements*. All of the required forms must be fully completed and

application requirements met at the time of submission. Upon review, however, HPD, at their discretion, may notify an Applicant that additional information or clarification is necessary.

Comparable Development Experience

The Applicant must have at least one Principal who has had prior development experience, as Principal, by successfully completing new construction of at least one project of comparable size and scope to the one proposed in this RFP. “Comparable Development Experience” is defined as the successful completion of the construction of at least one new construction project of at least two hundred (200) residential units within the past seven years.

At least one member of the Development Team, or a consultant, must be certified through the Passive House Institute (PHI) or the Passive House Institute US (PHIUS).

Comparable Management Experience

The Applicant, or the Applicant’s Property Management agent, must have at least one Principal with comparable rental management experience. “Comparable Management Experience” is defined as the successful management of at least two hundred (200) residential units in New York City within the past seven (7) years. The Principal must have been the owner and manager, or the owner acting through a management entity, to fulfill this qualification. No changes in managing agent may be made without prior HPD approval.

Current Development Capacity and Development Schedule

Applicants must demonstrate the current capacity to develop, finance, construct, and manage the Project, and pursuant to Developer Obligations (See *Section VI.A).* An Applicant’s current workload and other pending project obligations will be considered in assessing capacity for undertaking the Project proposed by the Applicant within HPD’s proposed timeframe prescribed for the Project.

Applicants must demonstrate a comprehension of the predevelopment, development, construction, and marketing/lease-up phases and requirements of the Project. Schedules should be detailed and efficient, and demonstrate the capacity to complete the proposed project in timely manner and within the proposed Development Schedule.

Conformance with RFP

Proposed Project must meet all Program Requirements. (See *Section V.B. Development Program Requirements and Preferences).*

Ability to Finance

Applicants must demonstrate adequate financial resources to develop a project of the scope proposed in their submission. HPD will evaluate the Applicant’s assets, bank or other lender references, and current commitments in order to assess the Applicant’s capacity to secure construction and permanent financing, meet construction lender’s equity requirements, absorb any cost overruns, and commence and complete construction of Applicant’s entire Project in a timely manner.

Feasibility of Development Proposal

The Applicant must submit a Proposal with a financing plan that is considered feasible and in accordance with HPD financing term sheets and professional industry standards. Proposed total development costs and operating budgets must be within current industry parameters. Proposed income from rents for the residential units, and any additional income from commercial space, or other sources, must be deemed realistic based upon Proposal information and market comparables.

Adverse Findings

An Applicant's Proposal may be rejected at any time during or after the evaluation process if there are any adverse findings regarding the Applicant, any entity or individual associated with the Applicant, or any property owned and/or managed by them. Such adverse findings may include, but are not limited to:

- conviction, administrative violation, judicial or administrative finding, pending judicial or administrative case, or pending litigation for harassment, arson, fraud, bribery, grand larceny, any felony or crime of dishonesty, or noncompliance with fair housing or anti-discrimination laws, any applicable codes or ordinances, labor laws, or construction laws.
- defaults or poor performance under any government-assisted program;
- suspension or debarment by any governmental entity;
- mortgage arrears, default, or foreclosure proceedings;
- tax arrears, tax foreclosure or enforcement proceedings, or sale of tax liens;
- voluntary or involuntary bankruptcy proceeding;
- negative findings by the Department of Investigation;
- non-compliance with Conditions, Terms and Limitations, as stated in the RFP (See *Section XI)*; or
- findings regarding Conflicts of Interest, as stated in this RFP. (See *Section XI).*

C. Competitive Selection Criteria

Proposals that satisfy the Threshold Requirements above will be evaluated and ranked according to the Competitive Selection Criteria described below. In evaluating Proposals under these criteria, the combined experience and resources of all Principals of the Applicant will be considered. HPD may request additional information, site visits, interviews, or other presentations by the Development Team.

Development Financing and Affordability
Weight: 35%

Financing

Proposals will be evaluated based on the reasonableness of estimated development and operating costs, proposed rents and other income, demonstrated financial condition to complete the Project, the feasibility and terms of the financing sources proposed to finance the Project, and the ability to support operating expenses, capital costs, and debt service. Applicants must include detailed market comparables for all underwritten income assumptions.

Affordability

Proposals will be evaluated on the range of affordability levels of the residential units to meet the economic needs of households in the community, as well as their ability to achieve fair housing objectives in the neighborhood by preventing displacement, promoting diversity or otherwise affirmatively furthering fair housing. Mixed-income proposals must meet HPD term sheet

requirements. Proposals will be evaluated on the soundness of the underwriting to achieve long-term affordability beyond the standard regulatory agreement period regarding affordable rent restrictions. Preference will be given to Proposals with a feasible plan to reach deep affordability levels for low-income and very low-income households, where that is consistent with the City's obligation to affirmatively further fair housing. Preference will be given to financial plans that effectively leverage other public and private funding resources and require the least amount of HPD subsidy. Additionally, preference will be given to Proposals that are responsive to the community priorities identified through HPD's outreach and a community workshop, as well the East Harlem Neighborhood Plan (see *Appendices A and C*).

Program
Weight: 15%

Proposals will be evaluated based on the quality of the overall development program to meet community needs, including the community priorities identified through HPD's outreach and community visioning workshop, as well as the East Harlem Neighborhood Plan *(*see *Appendices A and C).* Proposals should leverage the Site as a public resource to achieve the goals stated in the RFP (see *Section V*). Commercial and Community Facilities Plan will be evaluated based on the soundness of tenancy, tenant mix, marketing, management, and lease terms to secure tenancy. Plans should strengthen and preserve commercial corridors and meet community needs (see *Section IX.H.-Tab M).*

Development and Property Management Experience and Capacity
Weight: 20%

Previous development and property management experience will be evaluated as it reflects the Applicant's demonstrated ability to successfully carry out a quality project of this type, size, and complexity in a timely manner. The following Applicant Experience factors will be evaluated:

Development

- Extent of the Applicant's experience, in terms of number, size, type, and scale of projects completed within the last seven (7) years;
- Extent of the Applicant's experience developing and managing residential space and managing and operating retail and/or community facility space within the last (7) years;
- History of delivering quality projects on time and within budget;
- Experience developing mixed-income urban projects using public and private financing sources;
- Experience developing mixed-use urban projects;
- Experience in public/private partnerships;
- Project management approach and development capacity;
- Proposals will be evaluated on unit types, as well as amenity spaces and services to meet the needs of the target households. Proposals will also be evaluated on the strength and interest of the commercial and/or community facility tenancy, if applicable.

Design and Construction Management or Oversight

- Quality of design and construction in projects completed or currently being built by the Applicant and/or its Principals;

- Extent of the Applicant's experience developing high-performance buildings, specifically, certified projects through Enterprise Green Communities, LEED, Energy Star, or Passive House;

- Extent of the Passive House certification among members of the Development Team.

Marketing, Leasing/Sales and Property Management

- Experience developing and implementing affirmative fair housing marketing plans;

- Marketing Plan will be evaluated based on the demonstrated understanding and soundness of the Plan to affirmatively further fair housing;

- Experience operating developments with Commercial and/or Community Facility Uses in comparable markets, if applicable;

Community and Economic Development

- Experience in community and economic development;

- Consistent with the requirements of the HireNYC Program, 15% of the criteria points in this category will be awarded to Applicants who demonstrate a plan for outreach to residents of the Community District within which the proposed project is located related to employment opportunities generated by the proposed project;

- Local Hiring Plans will be evaluated based on outreach and coordination strategies for providing job training, job placement, and other opportunities for residents of the Community District. Said outreach may be demonstrated by activities including, but not limited to, training programs, job placement activities, and connection to HireNYC objectives, as well as Applicants' own staffing practices, and/or Applicants' contracting practices on the proposed project. Applicants will be required to comply with their outreach plans and will be required to regularly report on their outreach activities;

- Proposals will be evaluated based on Applicants' demonstration that their programming (such as training programs or job placement activities), their own staffing practices, or their use of M/WBE firms on the proposed project, will help to increase the participation of racial or ethnic minorities and/or women in the construction or management of the Development.

Architecture and Urban Design
Weight: 30%

Proposals will be evaluated on overall quality of urban design and architecture, as well as the Project's contribution to the neighborhood. Proposals will be evaluated based on two critical criteria: *Building and Site Performance*; and *Architecture and Urban Design*. Preferences will be given to Proposals that exceed Design Requirements and incorporate Design Preferences to create a high-quality Project that contributes to the physical, social, and economic character of the neighborhood. (See *Section V*).

In addition, Proposals will be evaluated on their consideration and approach for integrating the following community development objectives:

- Community priorities that were identified through HPD's outreach and community visioning workshop, as well as the East Harlem Neighborhood Plan (See *Appendices A and C*).

- Needs and priorities for the four GreenThumb community gardens to be integrated into the Project (See *Appendix B*).

Passive House

Proposals must conform to Passive House standards and pursue certification through PHI or PHIUS. Passive House designs will be evaluated on their ability to achieve exemplary building performance benchmarks and create healthy living environments. In addition, designs will be evaluated on achieving efficiencies that reduce "premiums" on construction costs, as well as long-term operating costs for tenants and the building owner.

Building and Site Performance

Designs will be evaluated on the performance of the building and demonstrated ability to significantly reduce energy and water consumption, improve air quality and comfort, as well as the effective incorporation of sustainable best management practices and other green infrastructure measures. Designs will be evaluated on distribution of unit sizes, quality of unit layouts, efficiencies of building design and floor plans to meet the needs of the target tenant population, and consistency with the required HPD Design Guidelines. In addition, designs will be evaluated on the other Design Preferences that have been incorporated into the Project, particularly regarding active design, universal design, and healthy homes.

Architecture and Urban Design

Designs will be evaluated on the approach for creating contextual architecture and urban designs that strengthen or enhance existing neighborhood commercial corridors and/or residential areas. Architectural designs will be evaluated based on set-backs, heights, massing, materials, projections and articulations, scale and other architectural elements that build upon existing, or establish quality, neighborhood character. Urban designs will be evaluated on demonstrated strategies that create ground floor spaces, sidewalks, green/open spaces, circulation patterns, and shared spaces that enhance access, connectivity, safety, and quality of the pedestrian experience.

D. Selection

Selection of a Developer under this RFP means only that HPD will commence negotiations with such Applicant regarding the proposal for the Development Site.

Negotiation Letter

Upon such selection, HPD will send written notification ("Negotiation Letter" or "Letter") to the Developer regarding the commencement of negotiations. This Negotiation Letter will set forth certain information regarding the Project and procedures that will form the basis for such negotiation.

Form A-2 is an Applicant's Letter that describes this process. Each Proposal must include this letter signed on behalf of the Applicant by a Principal. HPD reserves the right to terminate negotiations with or without cause after the issuance of such Negotiation Letter.

Pre-Development Timetable

The Negotiation Letter will include a development schedule setting out the major actions and timeframes necessary to start construction within 12 or 24 months from the date of the Letter, depending on the site. Failure of the Developer to follow the development schedule may result in the termination of negotiations and the selection of another Developer. The selected Applicant(s) must begin pre-development work within thirty (30) days of the date of the Negotiation Letter.

Disclosure

The Developer who receives a Negotiation Letter from HPD must thereafter disclose all previous participation with City-assisted projects. Such entity or entities and all Principals thereof will each be required to submit completed Entity and Individual Disclosure Statements which will be forwarded to the Developer. HPD will provide copies of these forms upon request to any Applicant.

No Obligation

This RFP does not represent any obligation or agreement whatsoever on the part of HPD. Any obligation or agreement on the part of HPD may only be incurred after HPD and the Developer enter into a written agreement approved by the Mayor and the Corporation Counsel. HPD may use the Proposals submitted pursuant to this RFP as a basis for negotiation with Applicants as it deems appropriate. HPD may reject at any time any or all Proposals, amend or withdraw this RFP in whole or in part, negotiate with one or more Applicants, and/or negotiate and dispose of the Development Site on terms other than those set forth herein (including to parties other than those responding to this RFP). HPD may also, at any time, waive compliance with, or change any of the terms and conditions of this RFP, entertain modifications or additions to selected Proposals, or withdraw or add an individual Development Site or parcels from or to this RFP.

X. SUBMISSION INFORMATION AND REQUIREMENTS

Community Workshop for East 111th Street Site: February 25, 2016

A. Proposal Content and Tabbing

Each Proposal must contain the forms and supporting documentation described below. Each copy of the Proposal must be tabbed as indicated below. Proposals that are incomplete or not in conformance with the requirements of this RFP will be eliminated from further consideration. All Proposal Forms can be found in *Appendix J.*

TAB A – Completeness Checklist and Applicant's Letter

Each Applicant must submit a **Completeness Checklist** (Form A-1) and **Applicant's Letter** (Form A-2). The letter must be printed on the Applicant's letterhead and signed by an authorized representative of the Applicant.

TAB B – Proposal Summary and Project Narrative

Applicants must complete the **Proposal Summary** (Form B). The Proposal Summary must be consistent with the entire Proposal (e.g. Financing Proposal and Design Narrative).

In addition, Applicants must include a narrative of one or more pages that describes the Proposal. The narrative must include, at a minimum, the size of the Project, proposed uses (residential, commercial, parking, open space), a breakdown of all residential units by number, type and affordability, the income and rent levels contemplated, the sources and amounts of financing, including any tax exemption assumptions, and a brief description of the most relevant development experience of at least the Principal(s) who would manage the Project.

TAB C – Applicant Description

All Applicants must complete the **Development Team Information and Applicant Questionnaire** (Forms C-1). Applicants that include a non-profit organization as a member of the Development Team must also complete the non-profit section of the Applicant Description (Form C-2).

If the Applicant is a joint venture, the Principals of each entity that make up the joint venture must be identified, and a Principal of each entity must sign the Form.

Applicants must include a chart or diagram explaining the intended form and structure of any proposed partnership or joint venture. The structure and percentages of ownership and investment must be included.

Applicants must provide resumes of Principals and key staff for daily project management on the Development Team. Applicants are encouraged to provide communications and marketing materials for the firm and project portfolio, and provide a staffing and governance plan indicating which Principals, partners, and staff members would have primary roles and responsibilities for decision-making and daily project management roles for implementing the Project. Organizational charts, schedules, and project budgets should demonstrate the project management approach and capacity to manage complex development projects within a public/private partnership.

TAB D – Development Experience, Management Experience and Current Workload

Each Principal of the Applicant must complete Forms D-1 through D-3. If an individual has no experience, this shall be indicated by including a form marked “None”. Forms D-1 and D-2 should be submitted as Excel files in original formatting on the flash drive.

A separate form shall be provided for each Principal with residential management experience. Care should be taken to provide accurate information about references. In addition, a separate form shall be provided for a Principal or managing agent proposed to manage the Development.

TAB E – Assets Statement

Each Principal of the Applicant must submit audited or reviewed financial statements describing in detail the Principal’s financial status in the two (2) most recent fiscal years preceding the deadline for the submission of Proposals in response to this RFP. Publicly-owned companies must submit the latest annual report and Form 10K as well as any Form 10Q submitted after such Form 10K. As an alternative, the **Assets Statement** in Form E may be used.

TAB F – Development Schedule

Applicants must provide a development schedule and phasing plan (if applicable), including benchmarks for commencement and completion of design and construction drawings, New York City Department of Buildings plan approval, site due diligence and preparation, bidding, financing,

construction commencement and completion, marketing and lease-up, and occupancy of the Project. In order to complete the timeline, assume at least one (1) year for HPD approvals for pre-development work and ULURP certification.

TAB G – Design Team Experience & Narrative

Applicants must submit design team's resume, focused on projects in the last ten (10) years, and qualifications detailing applicable residential and mixed-use development experience. This should include any high-performance buildings that were certified through Enterprise Green Communities, USGBC-LEED, Energy Star, or Passive House.

Applicants must provide a detailed narrative description outlining the proposed architectural and design concept for achieving the vision and goals outlined in this RFP. The design description should include unique elements and strategies for addressing key contextual characteristics of the Site and neighborhood, as well as construction methodologies that make the design, construction and operation of the building more durable, sustainable, and cost efficient. For this RFP, the design description must include Passive House elements, and any additional sustainable, health, active design, and universal design elements incorporated into this Project. This narrative must also describe the integration of the four GreenThumb community gardens into the project, including their location within the Site, the build-out of their spaces and infrastructure to be provided, and how the Project is responsive to their basic needs and priorities (see *Appendix B*).

Finally, the design narrative is intended to highlight elements of the photos, plans, elevations and renderings, infrastructure and construction, and zoning analysis as part of the Architectural Submission (See *Tab H*).

TAB H – Architectural Submission

All plans must be prepared by a Registered Architect or Professional Engineer. All materials must be on paper size of 11" by 17" or smaller and must be easily reproducible. The following must be included:

Photographs and Area Plan

- Photos: images of the Development Site and the Development Site's relation to surrounding buildings, streets, sidewalks, and open spaces, at least 3" x 5" in size. Photos must be keyed on the area plan outlined below. The photos should be clear enough to be reproducible. Applicants are encouraged to submit photos of other neighborhood and community characteristics and conditions that informed the designs.

- Area Plan: A copy of the most recent Sanborn map of the area; indicate vehicular traffic directions and locations of bus stops in a two-block radius.

- When discussed in the design narrative (Tab G), this section should highlight the neighborhood character and site conditions that provided direction for design solutions, as well as socio-economic and cultural characteristics and history that informed the design approach.

Site Plan

- Site plan indicating all components of the Project and other development within one block of the Development Site.

- Circulation and open space plan with walkways, sidewalks, garage and parking areas, building entrance/egress points, streetscape improvements, landscapes, outdoor furniture, and plant materials, fences, gates, lighting, easements, and encroachments, with dimensions.

- Sites plans are to be dimensioned, clearly illustrated, and include setbacks, encroachments, easements, and other relevant site plan conditions and features.

- Plans should include a North arrow, actual scale and graphic scale.

- For this RFP, site plans will include the location, infrastructure, connections, and other improvements for the GreenThumb community gardens.

- The design narrative (Tab G) should discuss each of these elements, as well as the programming of open space, connections to neighborhood resources and transportation systems, and unique urban design elements.

Elevations and Renderings

- Elevations: Dimensioned (at the same scale as floor plans) and clearly illustrated elevations of all building facades. Finishes, construction materials, ceiling heights, and floor elevations (level) must be shown and labeled on drawings.

- Renderings: Applicants are encouraged to submit architectural renderings to provide a better understanding of the development concept. Perspective drawings/renderings are optional, and do not replace the submission of required elevations. (Physical models will not be accepted).

- The design narrative (Tab G) should discuss each of these elements, as well as how these design elements related to the contextual architecture and urban design of the neighborhood, the unique character of materials that provide durability and aesthetic quality, and how the fenestration provides quality light and air, as well as addresses solar gain.

Floor Plans / Unit Plans

- Floor Plans: dimensioned (at the same scale as the elevations) and clearly illustrated typical floor plans. Include floor plans of floors with building amenities and shared spaces. Floors plans and narrative description should indicate unit distribution throughout building.

- Unit Plans: A unit plan for each unit is not required. However, submissions must include dimensioned plans of typical units illustrating total square footage, circulation, bedrooms, living room, dining, kitchen, closets, bathroom(s), and other standard or unique unit features.

- Unit plans must be 1/8”=1’0”. Unit and bedroom dimensions should be as illustrated in the HPD Design Guidelines for Multifamily New Construction and Senior Housing.

- Active and Universal Design: Plans should illustrate any active and universal design features.

- The design narrative (Tab G) should discuss each of these elements, as well as the following:

    - Total project square footage, location, and uses. Detail by gross, and net rentable/ saleable, including basements, circulation, mechanical rooms, storage areas.

- How the typical unit plan accommodates the needs of the target market.
- How the typical floor plan maximizes efficiencies and creates safe, high quality circulation patterns.

Infrastructure and Construction

- Infrastructure Plan: Dimensioned plan of relevant and known infrastructure features, including, but not limited to easements, encroachments, public utilities, and other conditions that influence the site planning, development, and construction of the Site.
- Green Infrastructure: Dimensioned drawings of sustainable site design features and green infrastructure to manage storm water or other environmental conditions.
- The design narrative (Tab G) should discuss each of these elements, as well as, if applicable, a general discussion of the rationale for the proposed phasing of the development and how this phasing plan is impacted by the requirements for providing infrastructure and other public improvements.

Zoning and Site Due Diligence

- Zoning: Zoning map for the Development Site, and a detailed zoning computation and analysis to demonstrate compliance with, or variance(s) from existing zoning.
- Building: Building Code analysis and information indicating occupancy group and construction classification.
- FAR: Square footage analysis with detail breakdown of residential, commercial/ community facility, parking, open space, and other components of the development program.
- Building Envelope: mass, height, set-back and other building envelope analyses.
- The design narrative (Tab G) should discuss each of these elements, as well as a planning analysis and site capacity study describing compliance with, or variance from applicable zoning and other legal requirements, as well as any known environmental concerns and how the Applicant intends to address them.

TAB I– Sustainability and Resiliency

Applicants should provide a concise narrative describing sustainability and resiliency elements included in their proposal. Address any unique design and construction features that involve resiliency concerns for site and building operations.

Passive House

The Applicant's narrative on sustainability and resiliency should clearly describe and illustrate the Passive House elements of the Project, and outline a preliminary plan for achieving certification through PHI or PHIUS. The narrative should convey an understanding of Passive House principles and the likely issues to navigate in implementing a Passive House building. This should include, but is not limited to, an overview of the Development Team experience with Passive House, a general plan for quality control during the construction process, a description of the building façade materials, and a discussion of long-term maintenance and capital replacement costs. Applicants should also complete and include the 2015 New York City Overlay of the Enterprise Green Communities Criteria (found in *Appendix G*) in this tab.

TAB J – Environmental Proposal

Applicants must submit a proposal for environmental testing and/or remediation, if applicable. The Developer should select a reputable environmental planning consultant with experience in the preparation of CEQR documents for rezonings.

TAB K – Financing Proposal

Applicants must submit a completed **Financing Proposal** (Form K) in both hard copy and Excel format. Electronic copies of the forms can be downloaded from the HPD website. If portions of the Project are separately financed, the Applicant should provide separate proposals for each portion.

All proposals must reflect the rent price affordability calculations (based on AMIs), and utility allowances described in Form K. In addition to the minimum affordability requirements described throughout this RFP, any subsidy programs that are utilized will determine any additional, affordability requirements, as applicable.

An estimate of the square footage construction costs using both net and gross square footage must be provided along with the Project budget.

Specific information about the superintendent's unit(s) should be included, as appropriate, in Form K. If the superintendent is not located onsite, a letter explaining alternative provisions for janitorial services that satisfy the Housing Maintenance Code must be included in this tab.

In addition to Form K, a narrative description that clearly explains the financing structure of the Project should be included. The narrative must explicitly identify proposed subsidy/financing programs. All proposals must include a primary financing scenario that does not rely on competitive financing sources from Federal, State or City Governments, including but not limited to HDC or HPD 9% Low Income Housing Tax Credits or any other competitive programs offered by HFA, HCR or HPD. The narrative may also include an alternative financing scenario for proposals that incorporate the use of competitively allocated funds, such as 9% Low Income Housing Tax Credits and NYS Housing Trust Fund subsidies, among others.

Units must remain in the rent regulation system for the duration of the Project, but in no case less than thirty (30) years. The Developer may submit a proposal to extend the affordability period for an additional number of years in this Tab. Preference will be given to Proposals with a feasible plan for long-term affordability beyond the regulatory period.

Market comparables, in the form of detailed rental listings of at least three properties/projects within less than a mile of the Site and with similar operations, must be provided. Applicants must provide detailed market comparable for all underwritten income assumptions.

The plans and costs for ongoing maintenance of open space(s) must be included in the narrative and budget.

TAB L – Financing Letters of Interest

Private and Public Funds

Private Financing

If private financing is proposed, a letter, or letters of interest, from a private lender or lenders must be included. Letters must be dated no earlier than two (2) months from the date of submission of the Developer's proposal. Applicants may use different private lenders for construction and permanent financing. The letters must be provided on the lender's letterhead, signed by a representative of the lender, and must state the amount and terms of the financing. The letter(s) must indicate a willingness to provide construction and permanent financing in amounts and with terms consistent with the proposal, and must include the following:

Construction Loan

- The amount of financing that the lender would consider based on the lender's preliminary determination of feasibility, based on expected development costs, operating income/expenses, and associated residential rent levels; and

- The interest rate (fixed or variable), the equity requirement, applicable fees, and other terms under which the lender would provide construction financing.

Permanent Loan

- The amount of financing that the lender would consider based on the lender's preliminary determination of feasibility, based on expected development costs, operating income/expenses, and associated residential rent levels; and

- The interest rate (fixed or variable), the equity requirement, applicable fees, and other terms under which the lender would provide permanent financing; and

- The maximum loan to value ratio and other underwriting criteria, including treatment of rental income, minimum maintenance and operating expenses, and debt service coverage requirements.

Public Financing

If HDC bond financing is proposed, a letter of interest from HDC is NOT required. However, a letter of interest from a credit enhancer acceptable to HDC must be provided and must include underlying credit terms including, as applicable, the amount of the proposed letter of credit, the terms of agreement, applicable fees and any other conditions.

If the use of public funds from sources other than HPD or HDC is proposed, a written indication of interest (e.g. a letter of interest, a commitment letter or an award letter) dated no earlier than two (2) months from the date of submission of the Developer's proposal, must be included. Each letter must be on the organization's letterhead and signed by a representative of that organization.

Competitive Sources

Any Proposal that includes funding or financing that is awarded on a separate competitive basis must submit an alternative scenario using non-competitively awarded sources and must provide appropriate letters of interest from those sources.

TAB M – Commercial/Retail and, if applicable, Community Facility Plan & Experience

Proposals must provide a Plan for Commercial use and Community Facility use, if applicable. Site planning, building arrangement, building systems, interior layouts, building materials, amenities, core and shell improvements, tenant improvements, and streetscape treatment will be considered. All Proposals must include a narrative that describes, at a minimum, the business attraction and retention strategy and the management/operations plan, which is feasible and responsive to the community's needs and priorities identified through HPD's community outreach process. The Plan must specify use and services to be provided, staffing and/or partners who will provide the services, operating budget and funding sources. A letter or letters of interest from prospective Commercial or Community Facility tenants must be provided. Agreements with community service providers, if applicable, are encouraged. If private financing is proposed, a letter or letters of interest from a private lender or lenders must be included. Developers should also describe their prior experience operating projects with Commercial or Community Facility Uses in comparable markets. Identify the neighborhoods, square footage, and key highlights of the tenant mix.

Market comparables, in the form of detailed rental listings of at least three retail spaces within less than a mile of the Site or a comparable retail location with similar retailer types, must be provided. If the Proposal includes a retailer not currently found in the area, provide estimated rents that can be feasibly achieved at the Site.

TAB N – Marketing Plan

Applicants must provide an affirmative marketing plan for the lease-up and/or sales of all affordable housing units. The marketing plan should include information about the anticipated target markets of the Project; pricing structures and amenities; community outreach strategy; and other relevant information. Proposals must explain how the Project affirmatively furthers fair housing. The strength of the marketing plan to affirmatively further fair housing will be evaluated. See *http://portal.hud.gov/hudportal/HUD?src=/program_offices/fair_housing_equal_opp/promotingfh* for more information. The marketing plan must comply with the HPD-HDC Marketing Guidelines (*Appendix H*).

TAB O – Local Hiring / *HireNYC*

Applicants must demonstrate a plan for outreach to residents of the Community District within which the proposed project is located related to employment opportunities generated by the proposed project. Said outreach may be demonstrated by activities including, but not limited to, training programs, job placement activities and connection to *HireNYC* objectives, as well as Applicants' own staffing practices, and/or Applicants' contracting practices on the proposed project. Applicants will be required to comply with their outreach plans and will be required to regularly report on their outreach activities.

Tab P – Minority and Women Business Enterprise (M/WBE)

Applicants are encouraged to submit a narrative that demonstrates that their programming (such as training programs or job placement activities), their own staffing practices, or their use of M/WBE firms on the proposed project, will help to increase the participation of racial or ethnic minorities and/or women in the construction or management of the Development.

Tab Q – Trade Secrets

All proposals and other materials submitted to HPD in response to this RFP may be disclosed in accordance with the standards specified in the Freedom of Information Law, Article 6 of the Public Officers Law (FOIL). The entity submitting a Proposal may provide in writing, at the time of submission, in Tab O, a detailed description of the specific information contained in its submission, which it has determined is a trade secret and which, if disclosed, would substantially harm such entity's competitive position. This characterization shall not be determinative, but will be considered by HPD when evaluating the applicability of any exemptions in response to a FOIL request.

B. Proposal Format

Each Proposal must include one (1) bound original, one (1) bound copy and one (1) flash drive with all components of the Proposal. An authorized representative of the Applicant must sign the original proposal.

Each Site will require a separate design and financing Proposal. Each Proposal must be tabbed as indicated above in *Section A. Proposal Content and Tabbing*. The tabs should run down the right hand side of the bound Proposal document.

All forms associated with the Proposal must follow the format included in this RFP. All Forms included in *Appendix J (Proposal Forms)* will be made available for download on the HPD website. Forms D-1, D-2 and Form K (Financing Proposal) must be submitted as Excel files and in original formatting on the flash drive.

Please keep all aspects of your proposal confidential to your team while the review process is occurring.

C. Proposal Modifications

An Applicant may submit a complete modified Proposal to replace all or any sections of a previously submitted Proposal up until the submission deadline of August 23rd, 2016. HPD personnel will not insert pages or otherwise modify the Applicant's Proposal. The Applicant has the full responsibility for ensuring that its final Proposal has been submitted in the desired form by the submission deadline. The front cover of a modified Proposal must identify the submission as a modified proposal and include the date on which the modified Proposal is submitted.

Modifications received after the submission deadline due date will not be considered. If HPD determines, upon review of a Proposal, that any items are missing and/or incomplete, HPD, in its sole discretion, by written notification given to the Applicant, may permit the Applicant to provide or clarify such items. Failure to provide complete information in a timely fashion could result in rejection of the Proposal.

D. RFP Addenda

HPD reserves the right to amend or withdraw this RFP at any time. In order to be considered, Proposals must conform to any amendments that may be issued to this RFP. Amendments may include, without limitation, any requirements and terms or conditions contained in this RFP. HPD will advise each Applicant of any clarifications or revisions.

If, in HPD's judgment, additional time is required for Applicants to prepare their Proposals, HPD reserves the right to grant an extension of the deadline for submission of a Proposal, and such extension will then be granted to all Applicants.

E. References and Requests for Further Information

Submission of a Proposal shall constitute permission from the Applicant for HPD to make such inquiries concerning the Applicant as HPD deems necessary. HPD reserves the right to communicate with any of the Applicants, but HPD is not obligated to do so. HPD may discuss the Proposals of any Applicants concurrently or sequentially, as HPD may determine. No Applicant has any rights against HPD arising from any such invitation to a discussion, or from any negotiations that may arise pursuant to the discussions.

Applicants must comply with all requests for information and, if requested by HPD, appear for presentations or discussions. If any Applicant fails to do so within the time period given (or within any time extension that HPD may grant), HPD may deem this as a failure and act of non-compliance with the RFP, which will permit HPD to select another Applicant or to solicit new Proposals. In furtherance and not in limitation of the foregoing, before a final selection is made, an Applicant may be required to produce more detailed information concerning the professional background of those persons who own and manage such Applicant, a report on the financial background of such Applicant, and information concerning the nature and status of any past or pending threatened charges or actions (including lawsuits, criminal or disciplinary actions, administrative proceedings by any governmental or regulatory agency or bankruptcy action) against such Applicant or any of its partners, directors, officers, employees, shareholders, subsidiaries, or affiliates, as the case may be.

XI. CONDITIONS, TERMS, AND LIMITATIONS

This RFP is subject to the specific conditions, terms, and limitations stated below:

The Site is to be disposed of in its “as is” condition. The City, its officers, agents and employees make no representation whatsoever as to the physical condition of the Site or its suitability for any specific use.

The Site shall be subject to New York City real property taxes and charges. Tax benefits may be available under the UDAAP, 420-c, 420-a, and/or Article XI tax exemption programs.

The proposed Project shall conform to, and be subject to, the provisions of the New York City Zoning Resolution, Building Code, and all other applicable laws, regulations, and ordinances of all Federal, State, and City authorities having jurisdiction, as the same may be amended from time to time.

Valid permits and approvals, as required by City, State, and Federal agencies, shall be obtained by the Developer prior to commencing work.

The commencement of negotiations with a Developer will depend on satisfaction of the additional documentation and review requirements described in this RFP, and will be subject to the subsequent approval of the Mayor.

The City will convey the Site pursuant and subject to the provisions of the LDA. HPD will recommend to the Mayor the acquisition price as stated. Where required, all documentation, including but not limited to the deed and LDA, shall be in form and substance satisfactory to the Mayor and Corporation Counsel. The conveyance will be subject to satisfaction of the applicable provisions of the City Charter and Article 16 of the New York State General Municipal Law.

No transaction will be consummated if any Principal of any selected Developer is in arrears, or in default upon any debt, lease, contract, or obligation to the City of New York, including without limitation, real estate taxes and any other municipal liens or charges. The City reserves the right not to review any Proposal by any such Applicant.

The Developer and any contractor it retains must pass a City background check before closing.

No commission for brokerage or any other fee or compensation shall be due or payable by the City, and the submission of a Proposal will constitute the Applicant undertaking to indemnify and hold the City harmless from and against any such claim for any such fee or compensation based upon, arising out of, or in connection with any action taken by the Applicant, the selection of the Applicant’s submission and invitation to the Applicant to respond to this RFP, the conditional designation of a Developer pursuant to this RFP, or the sale of the Site.

The City is not obligated to pay, nor shall in fact pay, any costs or losses incurred by any Applicant at any time, including the cost of responding to the RFP.

The selection of an Applicant will mean only that HPD may commence negotiations with that Applicant regarding the development of the Development Site. HPD will send the Negotiation Letter to the selected Applicant. The selected Applicant must begin pre-development work within thirty (30) days of the date of the Negotiation Letter. The selected Applicant will be expected to start construction on the date specified in their Development Schedule; however, the Applicant must expect to commence construction no later than twelve (12) months from the date of the Negotiation Letter.

This RFP does not represent any obligation or agreement whatsoever on the part of the City. Any obligation or agreement on the part of the City may only be incurred after the City enters into a written agreement approved by the Mayor and Corporation Counsel. The City is under no legal obligation to convey the Development Site offered through this RFP through a competitive process. The City reserves the right to use the Proposals submitted pursuant to this RFP as a basis for negotiation with Applicants as the City

deems appropriate. HPD may reject at any time any or all Proposals, amend or withdraw this RFP in whole or in part, negotiate with one or more Applicants, and/or negotiate and dispose of the Development Site on terms other than those set forth herein (including to parties other than those responding to this RFP). HPD may also, at any time, waive compliance with or change any of the terms and conditions of this RFP, entertain modifications or additions to selected Proposals, or withdraw the Site or portions of the Site from or add individual parcels to this RFP.

Selection of an Applicant's Proposal will not create any rights on the Applicant's part, including, without limitation, rights of enforcement, equity or reimbursement, until after the approvals of the City Council, Mayor, and Corporation Counsel, and until the deed, LDA and all related documents are fully executed and approved. The terms of the deed and LDA after execution, shall govern the relationship between the City and the Developer. In the event of any variance between the terms of this RFP and the deed or the LDA, the terms of the deed and/or LDA will govern.

All determinations as to the completeness or compliance of any Proposals, or as to the eligibility or qualification of any Applicant, will be within the sole discretion of the City.

This RFP and any agreement resulting there from are subject to all applicable laws, rules, and regulations promulgated by any Federal, State, or municipal authority having jurisdiction over the subject matter thereof, as the same may be amended from time to time.

XII. CONFLICTS OF INTEREST

Current and former employees of the City of New York may respond to this RFP only in accordance with Chapter 68 of the New York City Charter governing ethics and conflicts of interest affecting City personnel. Section 2604(c)(7) of the City Charter contains specific prohibitions that exclude enumerated groups of employees from participating in the sales process. In addition, current HPD employees may not respond to this RFP.

Persons in the employ of the City considering the submission of a Proposal are advised that opinions regarding the propriety of their purchase of City-owned property may be requested from the New York City Conflicts of Interest Board. This body is empowered, under Section 2602 of the City Charter, to issue advisory opinions on conflict of interest questions and other matters of ethical considerations. It is not necessary, however, that such an opinion be obtained prior to responding to this RFP.

Former employees of the City of New York are also advised that the City Charter imposes certain restrictions on post-employment and business relationships with the City. Such individuals should consult the specific provisions on this issue contained in the City Charter.

APPENDIX A:
Community Visioning Report

April 25, 2016

East 111th Street Site Community Visioning Summary Report

Office of Neighborhood Strategies
NYC Department of Housing Preservation & Development

HNY
HOUSING NEW YORK

01 Introduction

Why: Development, Informed by the Community

On February 25th, 2016, the Department of Housing Preservation and Development (HPD), with the help of the Office of City Council Speaker Melissa Mark-Viverito, Manhattan Community Board 11 (CB11), the Office of Manhattan Borough President Gale Brewer, and the Department of City Planning (DCP), facilitated a community visioning workshop to gather public input for the future development of new affordable housing, community gardens, and neighborhood amenities on the East 111th Street Site in East Harlem.

This public report summarizes the results of the workshop and additional feedback received through email and post-workshop questionnaires. This report is also available on HPD's website at http://www1.nyc.gov/site/hpd/community/east-111-street.page and will be attached to the Request for Proposals (RFP) issued for this Site. RFP applicants are strongly encouraged to consult it.

The purpose of the workshop was to understand community priorities, gather ideas for future development on the site, and enable meaningful and interactive participation from those who live and work in East Harlem and have an intimate understanding of neighborhood conditions and needs. HPD also held meetings with community gardeners to ensure their needs are met. Input gathered from the engagement process informed the development of the RFP for the site.

How: Community Visioning Workshops

The workshop was held at the Clinton Houses Community Center. Over 100 community members participated, including families, seniors, CB11 members, garden representatives, and local groups, with the majority living and working within a half mile of the site. About 36 HPD and DCP staff members facilitated at 11 different tables.

HPD designed participatory and interactive activities to gather community input on needs and desires, including:

- Housing types
- Community facility uses
- Retail types
- Affordability levels
- Site layout and urban design

Outreach for the event was conducted with the help of the Manhattan Borough President's Office, Office of Speaker Melissa Mark-Viverito, CB11, and local community organizations through door-to-door canvassing, street flyering, and email blasts to local groups.

In addition to the workshops, HPD created a paper and online feedback form with similar questions that were asked through activities at the workshop. Project partners collected feedback over the phone and in district offices. The Borough President's Office distributed 400 surveys in the neighborhood. Posters were placed along the sidewalk of the site to inform people about the site, the timeline and process, and how to submit feedback.

Outreach and participation in numbers:

2500+ bilingual flyers distributed
100+ community members attended
245+ total questionnaires completed

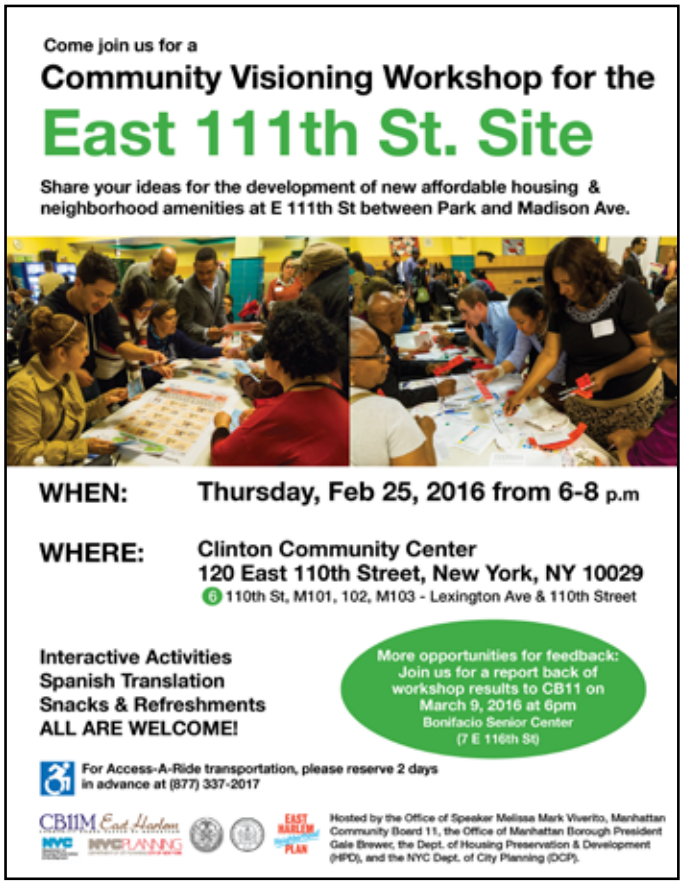

What: The East 111th Street Site

The East 111th Street site, bounded by East 112th Street, Park Ave, and Madison Ave, is a public site owned by the City of New York through HPD. The site is over 76,500 square feet in size and encompasses community gardens and a baseball field. Two privately owned parcels also exist on the block. Four community gardens will remain on the site, while two will be incorporated into other gardens within the surrounding neighborhood. The Parks Department is working with the organization that currently utilizes the baseball field to obtain a permit for another field in the area.

Community Engagement Timeline

Community Engagement & RFP Development

Stakeholder Meetings	Community Board Briefing	Community Visioning Workshop	Community Board Report Back	Continued Engagement through questionnaire and meeting with stakeholders
Jan & Feb	February 10	February 25	March 9	March and April

Next Step: RFP Release

Spring 2016

What: Building off the East Harlem Neighborhood Plan

This initiative builds off the planning framework identified in the East Harlem Neighborhood Plan (EHNP), which is the product of a community planning process that began in May 2015 and was convened by the City Council Speaker Melissa Mark-Viverito, Manhattan Borough President's Office, CB11, Community Voices Heard, and a diverse group of East Harlem stakeholders. The EHNP outlines a number of recommendations for the development of public sites in the neighborhood, many of which were echoed by workshop participants.

What: Incorporating Community Garden Needs

HPD and Parks met with leaders of the four gardens that will remain on site to understand the needs of the gardeners and how they might be incorporated into the future development of the site. These priorities are summarized in a document that will also be attached to the RFP. Top Left: Mission Garden; Top Right: Villa Santurce; Bottom Left: Villa Santurce Jardineras; Bottom Right: Chenchita's. Photo Credit: Chelsea Kelley.

EAST HARLEM Neighborhood PLAN

Previously Stated Community Goals

- **Develop 100% permanently affordable housing for a mix of incomes, prioritizing deepest levels and vulnerable populations**
- **Promote sustainability, open space, continued community gardening, and active recreation and design**
- **Activate ground floors with commercial and community facility uses that serve the neighborhood**
- **Support small businesses and promote local economic and workforce development**
- **Promote walkability and pedestrian safety**

Source: General principles paraphrased from the East Harlem Neighborhood Plan recommendations related to public sites. See RFP Appendix for specific EHNP recommendations related to public sites and visit www.eastharlemplan.nyc

02 Summary of Findings

Though there were many different visions for the site, the following were common threads that the majority of tables identified as priorities:

Programming

- Housing Types: Families, singles and young couples, seniors, and other supportive housing for those with special needs
- Community Facility Types: Arts and cultural center, publicly-accessible open space, active recreation facility, and other youth and workforce/economic development centers.
- Retail Types: Sit-down restaurant or cafe, affordable supermarket with healthy food options, and pharmacy; commercial uses in general should promote activity and enliven the street

Affordability

- Rents affordable to a wide mix of household incomes, but prioritizing extremely low and very low income households
- Strategies for affordability in perpetuity, such as community land trusts and non-profit ownership
- Options for homeownership

Site Layout & Urban Design

- Maximize the number of affordable units, while respecting surrounding context
- Create multiple buildings of varying scales with greater heights on the avenues
- Buildings should incorporate setbacks
- High quality design and green / sustainable features
- Retail should be located on the avenues
- Gardens should be located where there is access to adequate sunlight
- Safety and security strategies should be prioritized on Park Avenue
- Streetscape improvements, such as trees, benches, bike racks, and lighting, should be incorporated into the development and sidewalks
- Publicly-accessible open space (in addition to the four community gardens being incorporated into the new development)

Additional Considerations

- Local hiring initiatives, fair wages, and apprenticeship programs
- Targeted marketing of new units to local residents and those that have been displaced from the neighborhood
- Willingness to work together with the community and gardeners, after developer selection

An earlier revision of these findings was presented to the CB11 Land Use Committee on March 9th, 2016, and were adjusted to include additional feedback received through March 22 from the paper and online questionnaires, email account, and additional feedback reported to CB11, Borough President, and City Council Speaker.

HPD will evaluate RFP submissions based on the quality and feasibility of the proposals, as well as how they respond to the priorities articulated by the community.

> I love East Harlem and I want it to flourish and grow

> A family-oriented community where there is a greater sense of belonging

> Development that will accomodate the people who have lived and contributed in this neighborhood all these years, but are getting displaced due to gentrification and rising rents

> My kids to be able to afford to live in the neighborhood in which they grew up

> A space to help bring neighbors from diverse backgrounds together to socialize...Spaces where people from all walks of life feel welcome and there are opportunities for people to have meaningful and positive interactions

03 Desired Uses

As a warm up exercise, each participant filled out a questionnaire and defined his or her top three types of housing, community facilities, and retail needs in the neighborhood. A total of 75 questionnaires in both English and Spanish were collected at workshop tables, and 171 were collected through the online and paper versions. At the workshop, participants at each table worked together to design their ideal program for the site through a hypothetical building activity. Participants used tiles with images of different types of housing, community facilities, and retail uses and prioritized the uses they wanted to see built (pictured on page 8). The questionnaire results are summarized on pages 9-10.

OF TOTAL TABLES...

75% prioritized a workforce training center. About **55%** prioritized an arts / cultural center, day care, grocery, sit-down restaurant, or small business, while **45%** wanted a healing center.

> We need access to *affordable* fresh fruits and vegetables and healthy restaurant options.

> Living on a fixed income is hard in NYC. Let's safeguard our seniors as meaningful members of our community.

> The community desperately needs resources to help find jobs, engage in structured recreation, and help youth through quality afterschool programs.

Hypothetical Building Activity - Final Boards

Types of Housing

Participants prioritized units for families, singles and young couples, and seniors as the top housing needs in the community. Other supportive housing types were also prioritized, particularly for veterans, formerly homeless, grandparents raising kids, and people with disabilities. For supportive housing and units for young couples and singles, we heard a strong preference for one bedrooms over studios. Homeownership opportunities were also mentioned as desirable.

The chart below compiles the results from the hypothetical building board activity (pictured on the previous page), summarizing the aggregate proportions of each type of housing that table participants desired to see on the site:

Housing type	Range at tables[1]	Average proportion[1]
Family	26-50%	35%
Singles / Couples	25-44%	29%
Senior	6-33%	16%
Supportive	6-25%	17%
Other	0-11%	2%

[1]Percent of total "housing" tiles placed on boards. Range and averages reflect information from 11 different tables.

Top 3 Housing Types

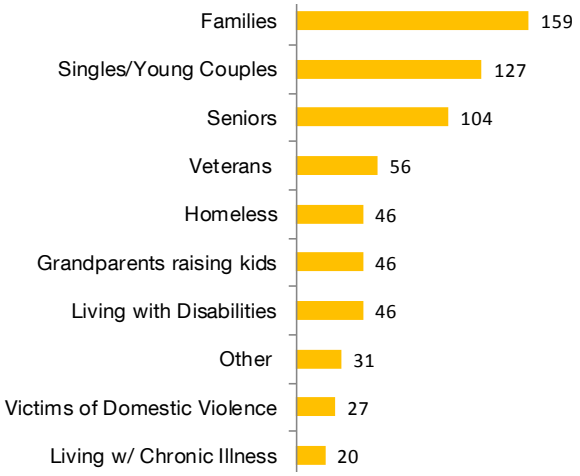

Types of Community Facilities

An arts and cultural center was identified as a top priority, with a particular focus on youth programming. Open space was another primary need, with an emphasis on preserving the community gardens and creating additional public open space. Additionally, participants voiced a desire for an active recreation facility, youth and workforce development or small business incubator, and affordable day care option. A few tables suggested a multi-purpose community center that would have youth and adult programming centered around active recreation, arts and culture, and economic development / education.

Top 3 Community Facilities

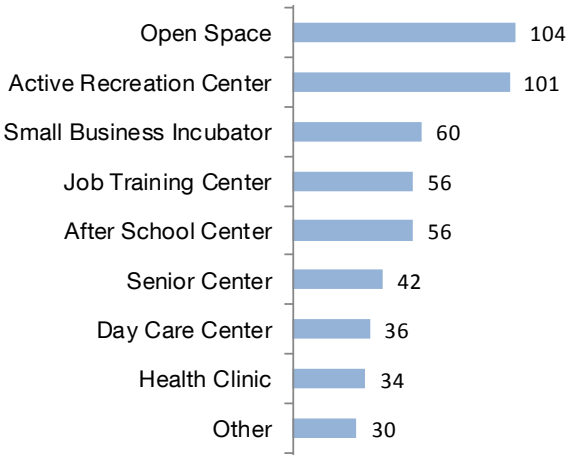

IDEA: Creating new public open space was very important to many participants. However, creating more open space means could potentially limit the number of affordable units that can be built. As a way to achieve both goals, some participants suggested creating a publicly-accessible rooftop garden on the new development.

Types of Commercial / Retail

The need for more retail was a key theme, with residents noting a lack of amenities and a desire to activate blank street walls within the neighborhood. A sit-down restaurant or cafe that could serve as a community gathering space was identified as the top priority. Participants also noted the need for an affordable supermarket in the neighborhood with fresh, healthy food options, especially since the recent closing of the Pathmark on 125th Street. Participants also noted a lack of convenient access to a pharmacy, bank, or other convenience retail.

Top 3 Retail Uses

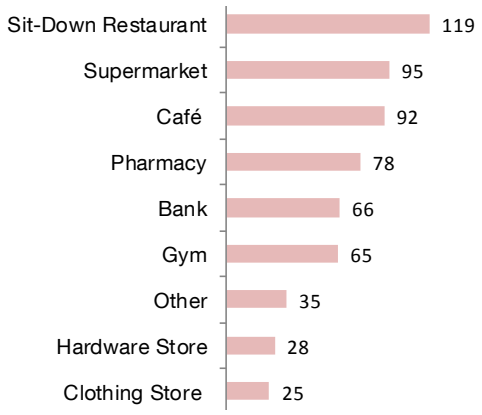

> **A small business incubator would foster entrepreneurship skills in a community that is not often provided with the opportunities to develop ideas and products.**

04 Affordability

The second activity simulated the challenges associated with making an affordable housing project work financially -- to not only build affordable housing but also maintain it over the long term. We asked participants, within these parameters, "What mix of affordability levels are most important in the neighborhood?"

The activity began with an overview of Area Median Income (AMI)[1], the neighborhood's income distribution, and rents considered affordable to families of different household sizes and incomes. Then, each person received a limited number of tickets (representing City subsidy) that could be traded for stickers symbolizing apartments at different rent levels. In general, more tickets were needed for deeper affordability, and higher-rent units could help subsidize more affordable units. Participants had to fill their buildings with stickers using a limited number of tickets to design their mix of affordability levels. After the exercise, we asked people to share their concerns, as well as their ideal affordability mix if there were no rules.

In addition to the workshop activity, the online feedback form asked respondents what mix of affordability is most important for the site.

1 Area Median Income, or AMI, is the measure used to describe affordability levels for households of different incomes and sizes. HUD determines the AMI for different regions throughout the U.S. each year in order for them to qualify for federal funding. AMI for the New York Metro Area in 2015 is defined as $77,700 for a family of 3. This is known as 100% of AMI. HPD uses this AMI as a point of reference and sets its own income requirements that are tailored to New Yorkers based on a percentage of that designated AMI. For example, a family of 3 earning $38,850 (half of $77,700) is categorized as earning 50% of AMI.

Both workshop and questionnaire participants expressed a need for housing that served a range of incomes. While some envisioned housing on site to serve only a mix of extremely low- to low-income households, others envisioned the mix to include moderate and middle income households, particularly with homeownership opportunities, to create a more socioeconomically diverse development. The vast majority of participants desired 100% affordable housing with a focus on families earning less than 60% of AMI[2], and emphasizing the urgency of units for those earning 30-40% of AMI[3]. Some also noted that moderate- and middle-income families also need affordable homes in the neighborhood.

2 For a family of three earning approximately $46,620
3 Fora family of three earning approximately $23,350 - $31,080

What does it cost to build & maintain affordable housing?

NYC Department of Housing Preservation & Development | HNY Housing New York

Instructions

1. Each person has **20 tickets**, which represent a limited amount of "City subsidy."
2. **Trade in your tickets for stickers**, which represent "units" affordable for a range of incomes.
3. **Each "unit" differs in cost;** in general, you need more tickets to subsidize deeper affordability.
4. **You must fill up your building** (10 stickers in total), but you don't have to use all of your tickets.
5. In the box underneath, **tell us why.**

Of the total Households in East Harlem (CD11)

19% earn **120%+ AMI**

12% earn **81-120% AMI**

16% earn **51-80% AMI**

16% earn **31-50% AMI**

37% earn **<30% AMI**

A majority of those earning below 30% of AMI are NYCHA households. About one third of total households in CD11 are NYCHA, earning an average median income of $19,000.

Source: U.S. Census Bureau ACS 5 Year Estimates 2008-2012

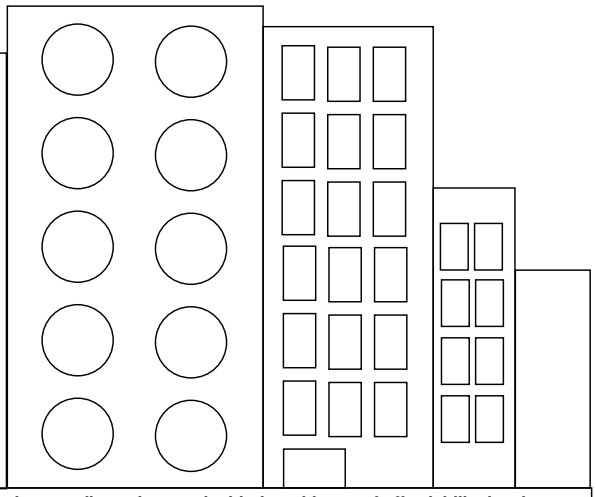

Briefly share us your thoughts or tell us why you decided on this set of affordability levels:

Units & Income Limits Levels*: *For a household of 3 in a 2-bedroom apartment. Please refer to AMI cards for other family and unit sizes*		To build, you need:
165% AMI	**Income:** $128,205 **Rents:** $3,205	0 tickets +BONUS1
120% AMI	**Income:** $93,240 **Rents:** $2,331	0 tickets
100% AMI	**Income:** $77,700 **Rents:** $1,942	1 ticket
80% AMI	**Income:** $62,150 **Rents:** $1,553	2 tickets
60% AMI	**Income:** $46,620 **Rents:** $1,165	1 ticket
50% AMI	**Income:** $38,850 **Rents:** $971	2 tickets
40% AMI	**Income:** $31,080 **Rents:** $777	3 tickets
30% AMI	**Income:** $23,350 **Rents:** $583	4 tickets

**To describe affordability for different household incomes and family sizes, HPD uses the federal government's Area Median Income (AMI) figure. For the New York Metro Area, AMI is defined at $77,700 for a family of 3. Families that earn less than this amount are categorized as a percentage of that AMI. For example, a family of 3 earning half of that figure ($38,850) is categorized as 50% of AMI.*

Participants also emphasized a desire for long-term affordability, citing strategies such as non-profit ownership and Community Land Trust models. Participants also wanted the developer to create a plan to promote local hiring, fair wages, and apprenticeship opportunities during construction.

Affordability Activity Boards

05 Site Layout & Urban Design

The third activity brought urban designers from the Department of City Planning to help visualize what participants envisioned in terms of urban design and public realm improvements. The facilitators asked participants: "How should the buildings be laid out? Where should the gardens go? How should the site be connected to the surrounding area? What should it feel like walking down the street? What public amenities would you like to see and where?" Each table completed a site diagram (see pages 15-16) and street-view sketches (see page 18).

The site design activity was influenced by the need to incorporate four community gardens into the future redevelopment plan for the site. Prior to the workshop, a number of meetings were held with the gardeners to identify their needs for the new space[4]. Access to sunlight is the most critical need, so buildings will have to be designed to minimize shadows. DCP developed a shadow analysis showing where shadows fall during various times of the day and year. Based on the location of the shadows, a majority of participants chose to locate the gardens on the eastern and southern portions of the site (along Park Avenue and E. 111th Street). However, many participants preferred site design to ensure active uses along Park Avenue to promote safety and security. Thoughtful treatment is needed here to achieve both objectives.

4 See additional Appendix items in the RFP for garden priorities and guidelines for relocation.

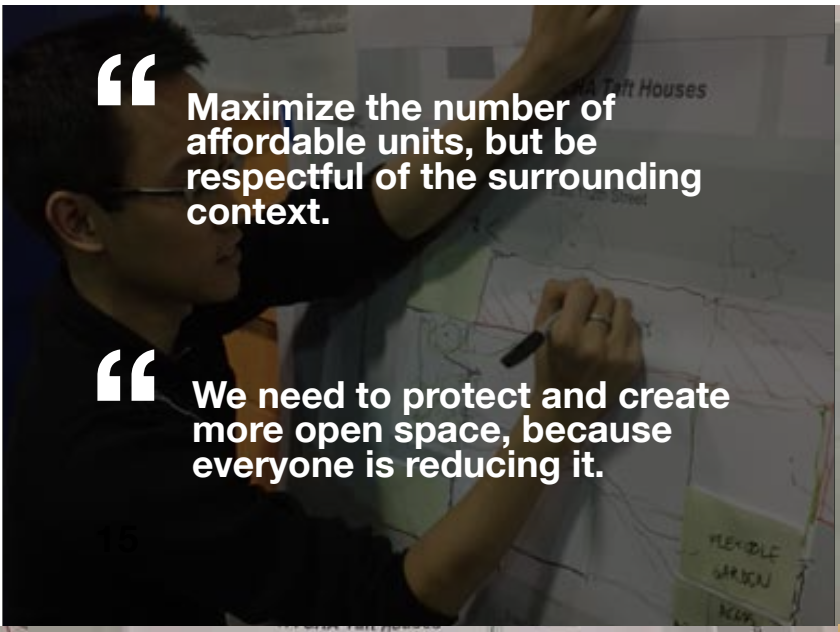

“ Maximize the number of affordable units, but be respectful of the surrounding context.

“ We need to protect and create more open space, because everyone is reducing it.

“ Street trees and benches please!

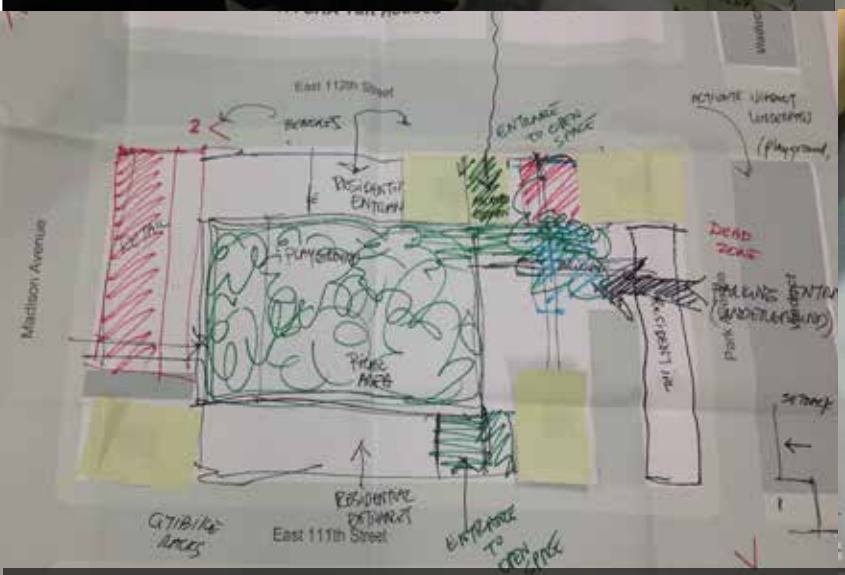

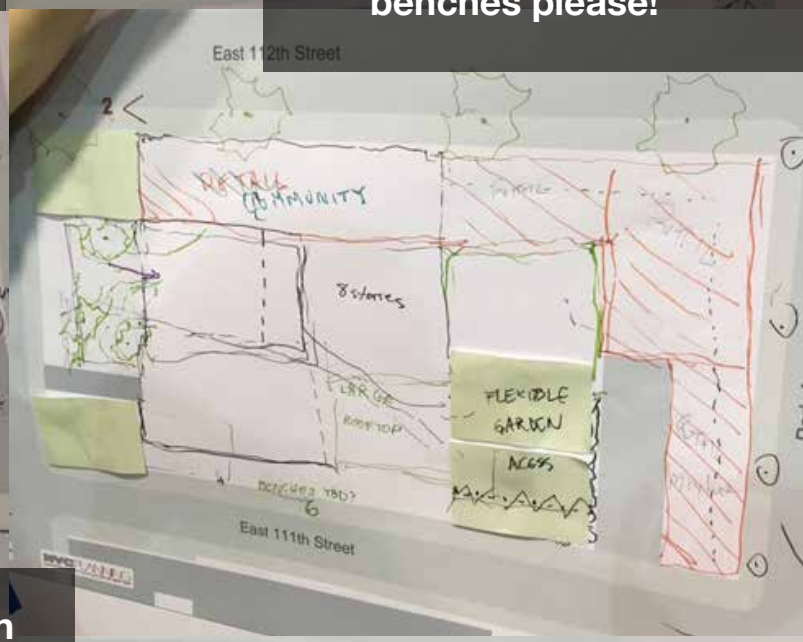

“ Green roofs and rainwater collection system that are connected to the gardens!

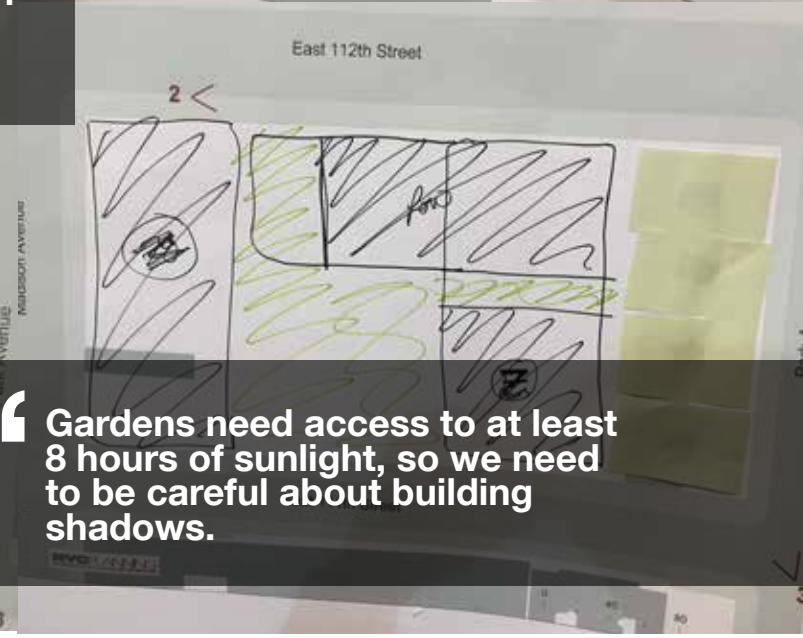

“ Gardens need access to at least 8 hours of sunlight, so we need to be careful about building shadows.

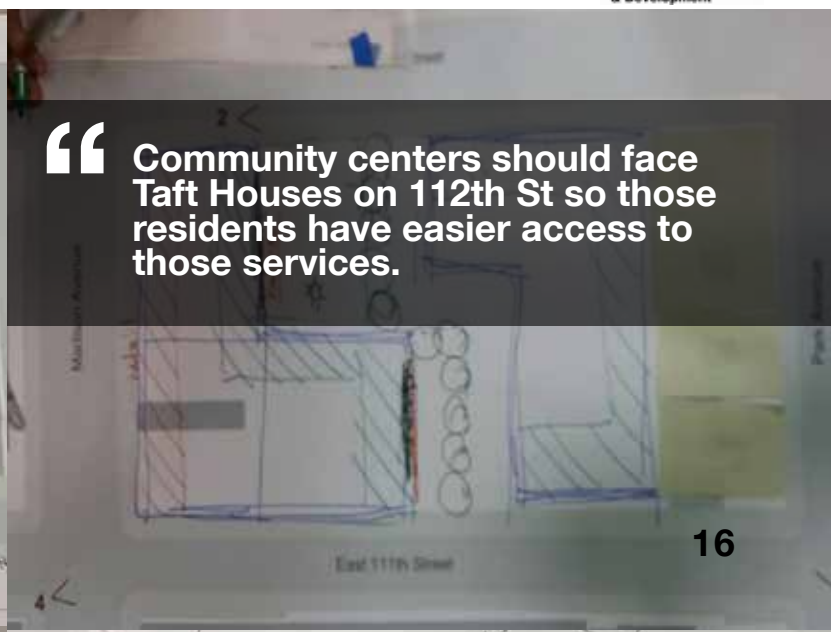

> **Community centers should face Taft Houses on 112th St so those residents have easier access to those services.**

> **Retail should go on the avenues to get more foot traffic and activate the streets.**

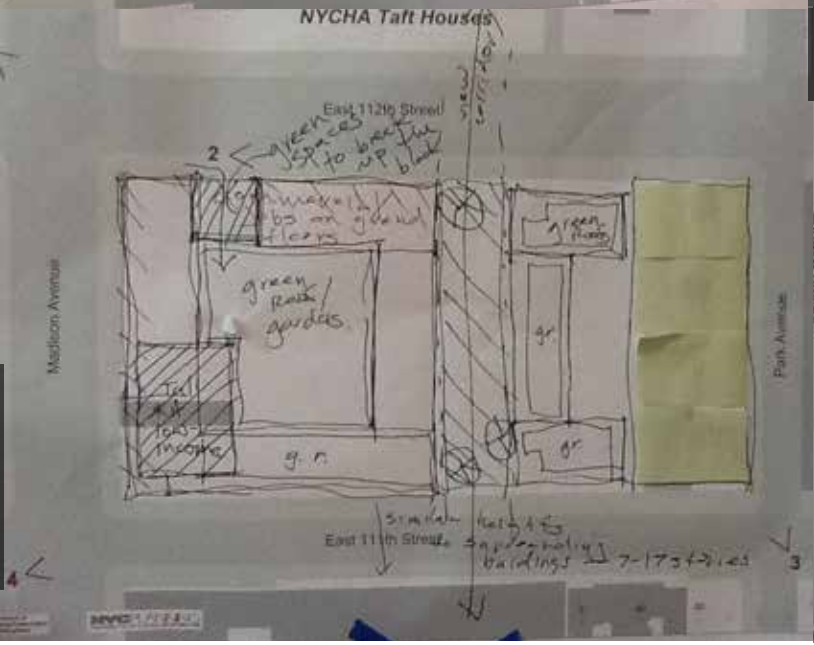

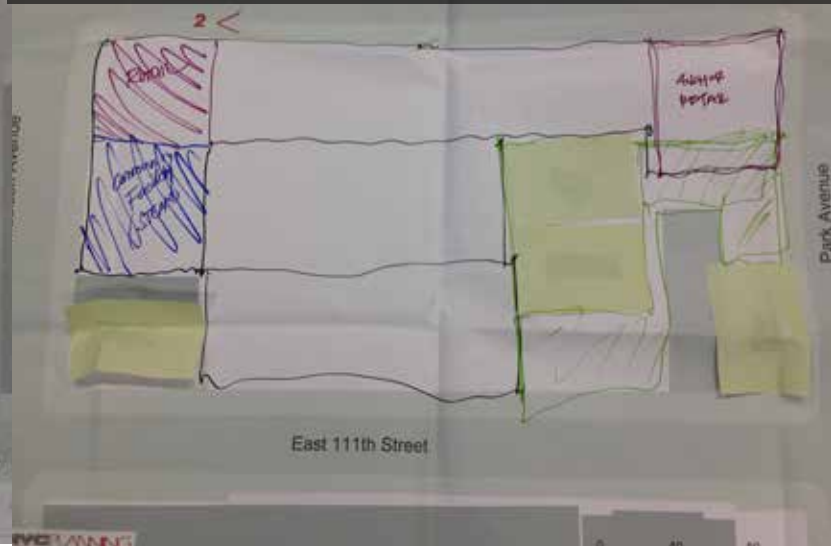

A number of participants voiced a desire to see a more active street wall, with a particular emphasis on providing retail along Park and Madison Avenues. We also heard a desire to see publicly-accessible open space in addition to the gardens, potentially through a greened area running through the block connecting 111th and 112th Streets, as well as ideas for green space on roofs. Participants noted a need for streetscape improvements around the site. Some suggestions included more trees, bicycle stations, traffic calming, benches, and street lighting. Parking was also identified as a need that could be placed underground.

We also heard a large number of participants who were willing to accept taller buildings as a trade-off for more affordable housing and to reach deeper levels of affordability. However, many participants, especially those that lived directly adjacent to the site, felt strongly that new buildings should respect the context of the surrounding neighborhood and that no structures should be taller than adjacent buildings. Majority of participants suggested maximizing building density on the avenues and stepping down on the side streets, so as to meet the different affordable housing needs in the community without overwhelming the area with tall buildings.

There was also interest in incorporating green building design into the new structures, including noise-reducing materials (particularly along the viaduct), and components such as energy efficiency, green roofs, and rainwater collection or greywater systems connected to the gardens.

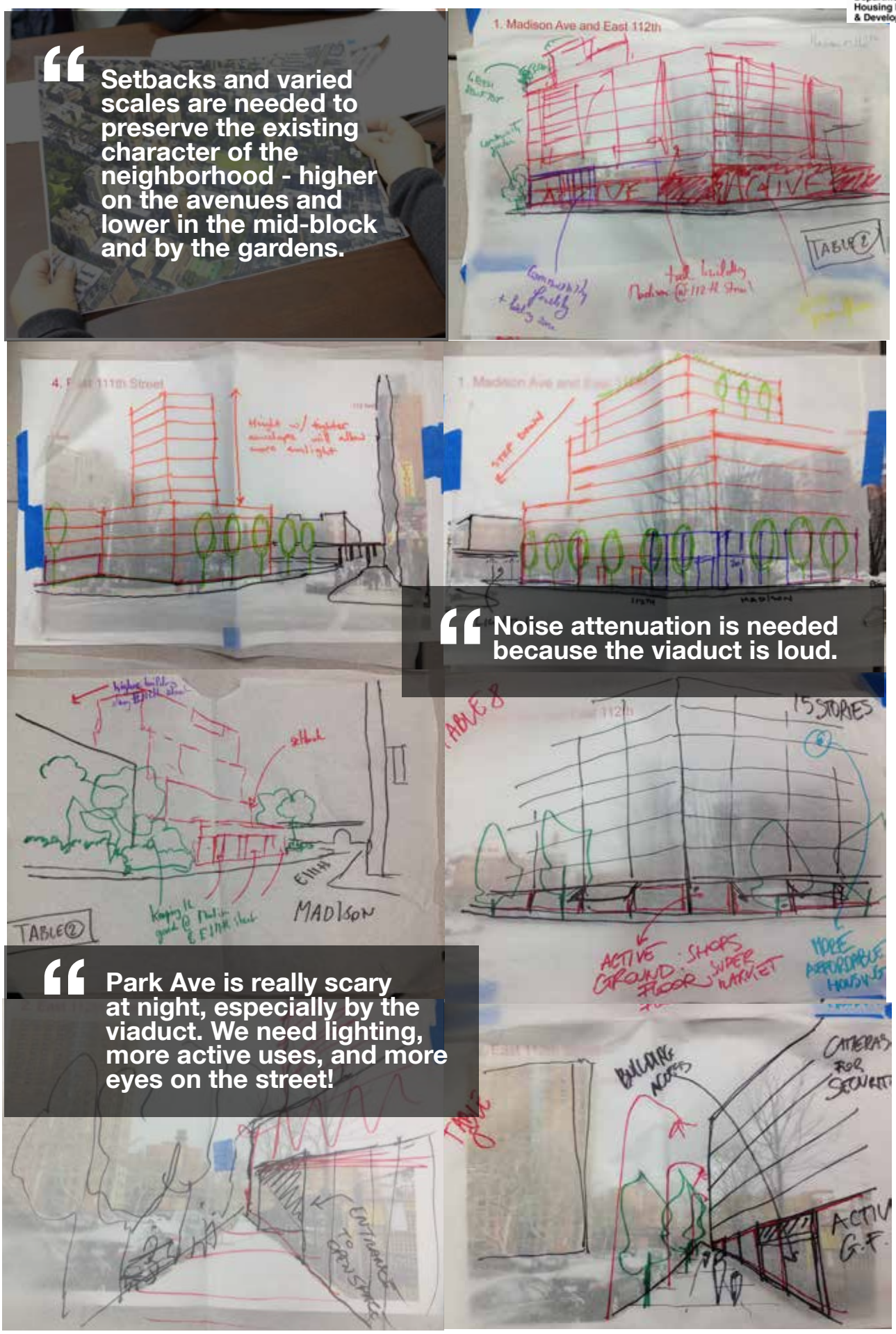

"Setbacks and varied scales are needed to preserve the existing character of the neighborhood - higher on the avenues and lower in the mid-block and by the gardens.

"Noise attenuation is needed because the viaduct is loud.

"Park Ave is really scary at night, especially by the viaduct. We need lighting, more active uses, and more eyes on the street!

Final Street-View Sketches

Acknowledgments

We would like to thank all of the community groups and participants in the workshop for helping with outreach and taking the time to share their concerns and ideas regarding the future development of the E. 111th Street site. We would also like to thank City Council Speaker Melissa Mark-Viverito and Manhattan Borough President Gale Brewer for their co-sponsorship, workshop remarks, and their staff's help with outreach, workshop planning, and facilitation. Additionally, we want to thank Manhattan Community Board 11 for helping to plan and co-sponsor the event. We thank all project partners for their help collecting post-workshop feedback and providing comments for this report. Finally, we thank the volunteer staff from the Department of Housing Preservation and Development (HPD) and the Department of City Planning (DCP) who helped to make the workshop possible.

APPENDIX B:
Community Garden Profiles and Priorities

GreenThumb
New York City Department of Parks & Recreation

Community gardens to be preserved on block 1617:

Villa Santurce
Mission Garden
Villa Santurce Jardinera
Chenchita's Group Garden

Parks

About GreenThumb Community Gardens

GreenThumb was initiated in response to the city's financial crisis of the 1970s, which resulted in the abandonment of public and private land. The majority of GreenThumb gardens were derelict vacant lots renovated by volunteers.

These community gardens, now managed by neighborhood residents, provide important green space, thus improving air quality, bio–diversity, and the well–being of residents. But gardens aren't just pretty spaces; they're also important community resources.

Community gardens provide important shared green sites to grow food, provide valuable open space, serve as dynamic classrooms for NYC schoolchildren, create a sense of community, and challenge communities to interact. East Harlem is home to a multitude of these vibrant, green, urban spaces.

-NYC Food Policy Center at Hunter College 2016

Community Gardens make a significant contribution to civic and cultural life in CB11 East Harlem. They create gathering places that bring residents together across boundaries of age and ethnicity. They support community policing efforts by putting eyes on the street. Most provide food for the gardeners, their families and friends. They also provide flood resiliency.

Community Board 11

Current Locations of Community Gardens on block 1617

NYC Parks GreenThumb

MANHATTAN BLOCK 1617

CHENCHITA'S GROUP GARDEN, MISSION GARDEN
VILLA SANTURCE, VILLA SANTURCE JARDINERA
DATE: 03/25/2016

0' 50' 100' 200'

NORTH

MANHATTAN BLOCK 1617
CHENCHITA'S GROUP GARDEN
MISSION GARDEN

DATE: 03/25/2016

MANHATTAN BLOCK 1617

VILLA SANTURCE

VILLA SANTURCE JARDINERA

DATE: 03/25/2016

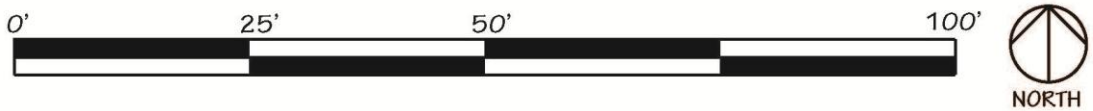

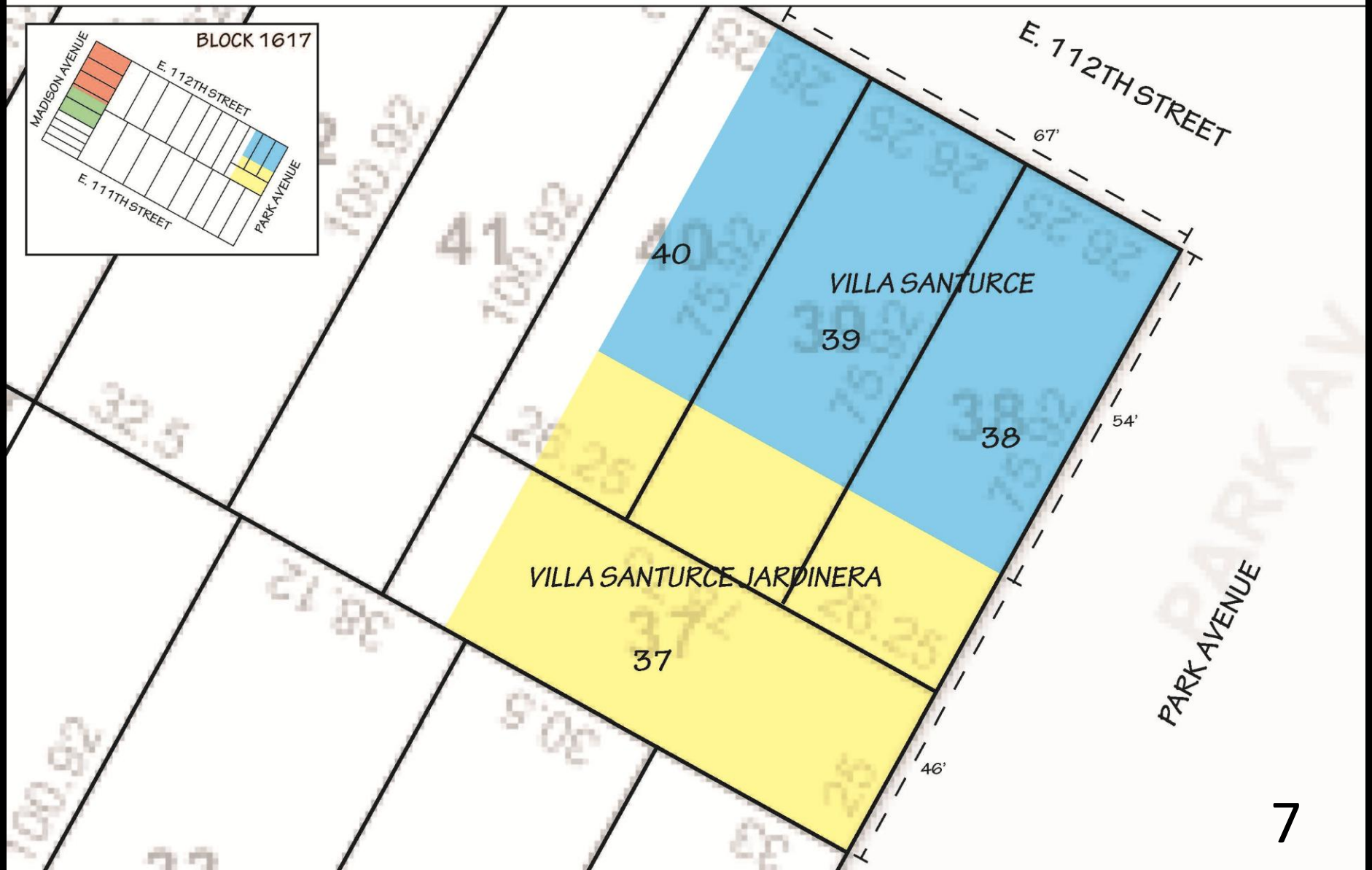

In order of Importance:

1) Threshold Requirements
2) Top Shared Priorities
3) Top Shared Requests
4) Top Shared Wish Items

Threshold Requirements

Absolutely Necessary for a GreenThumb Community Garden to Function Properly

- ❑ Clean & tested soil
- ❑ Free of rubble
- ❑ High quality exterior fencing
- ❑ Access to clean water
- ❑ ADA accessible design
- ❑ Majority permeable garden floor
- ❑ Structural integrity for sustaining long term garden activities
- ❑ Access to at least 6 hours of either bright indirect or moderate indirect sunlight (Shadow Analysis on pages 49 to 70)
- ❑ Comprehensive waste management and rodent control by building management of development
- ❑ Ability of garden groups to manage their respective spaces within the parameters of GreenThumb's policies: http://www.greenthumbnyc.org/pdf/gardeners_handbook.pdf
- ❑ No obstructions or traffic safety concerns preventing access by GreenThumb vehicles for maintenance & operations as well as public access

  -Double gate (details on next page) with curb cut

1 FENCE PANEL WITH DOUBLE LEAF GATE

SCALE: 1 1/2" = 1'-0"

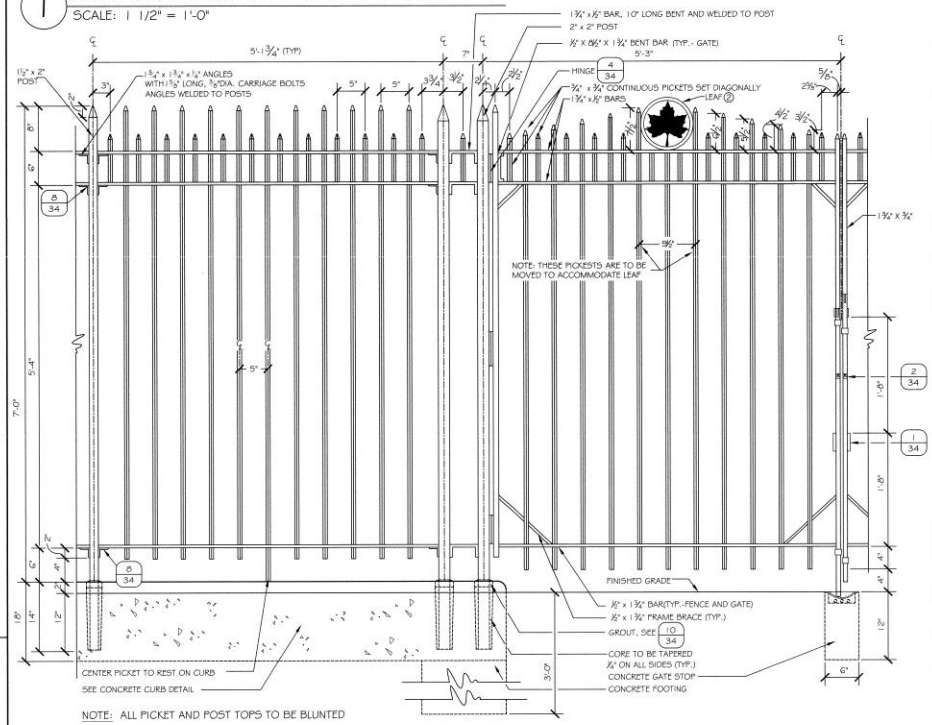

NOTE: ALL PICKET AND POST TOPS TO BE BLUNTED

ELEVATION

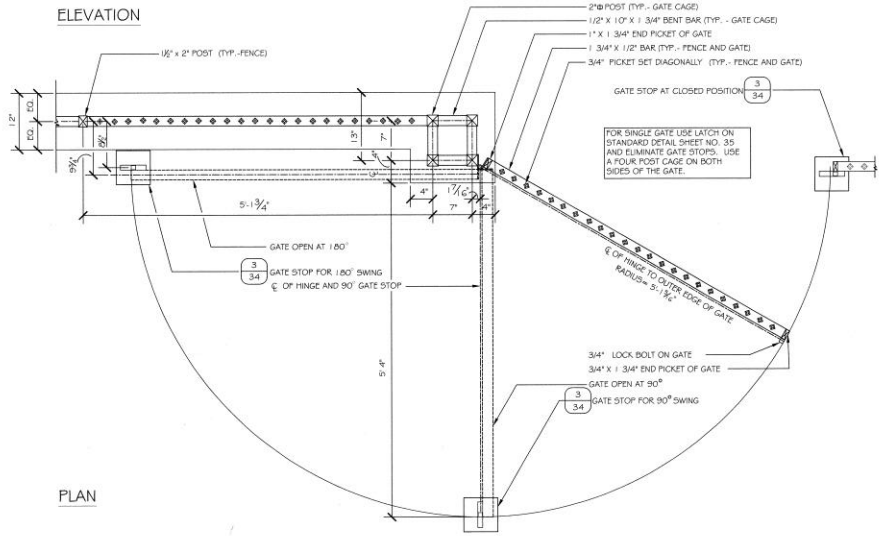

PLAN

2 CAST IRON PARK LEAF

SCALE: NOT TO SCALE

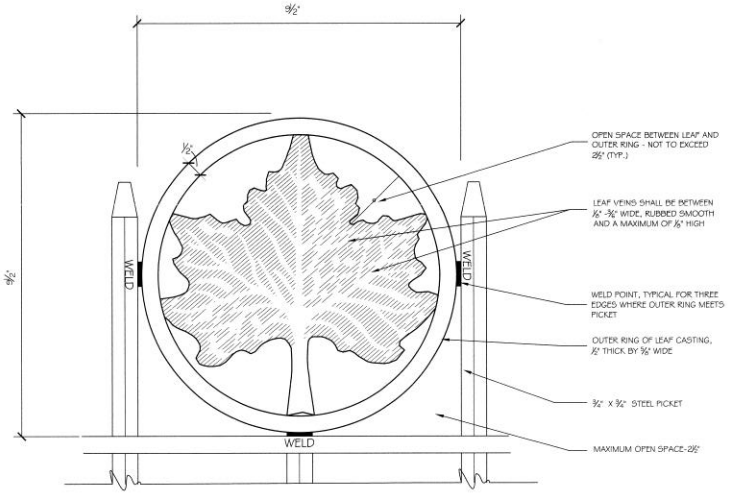

3 LOCK BOLTS ON DOUBLE GATES

SCALE: 3" = 1'-0"

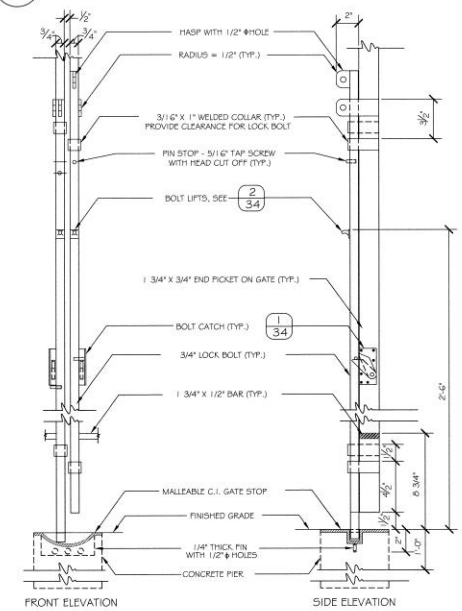

FRONT ELEVATION SIDE ELEVATION

NOTES:

1. THE CONTRACTOR SHALL CONSTRUCT THE NEW 7'-0" HT. STEEL PICKET FENCE IN ACCORDANCE WITH DPR STANDARD DETAILS. ALL HARDWARE AND CONNECTIONS SHALL BE CONSISTENT WITH DPR STANDARDS.

2. THE LEAF CASTING SHALL HAVE A FLAT BACK. ONLY THE FRONT OF THE LEAF SHALL BE CONTOURED. CASTING SHALL BE FABRICATED FROM DUCTILE IRON TO THE DIMENSIONS SHOWN HEREWITH AND ACCORDING TO APPROVED SHOP DRAWINGS.

3. THE OUTER RING OF THE CASTING SHALL RECEIVE A MINIMUM OF THREE (3) WELDS AT CONTACT POINTS TO THE BARS OF THE FENCE. ALL WELDS TO BE GROUND SMOOTH. NO FIELD WELDING PERMITTED.

NYC Parks

CITY OF NEW YORK
PARKS & RECREATION
OLMSTED CENTER
FLUSHING MEADOWS CORONA PARK
FLUSHING, NEW YORK 11368

COPYRIGHT © 2014 NYC PARKS & RECREATION

DRAWING TITLE
7'-0" HT. STEEL FENCE AND GATES WITH LEAF

DRAWN BY STAFF	CHECKED BY R. WEI, PE
APPROVED BY	STANDARD D.P.R. DETAIL TYLA / 146-R8
APPROVED BY DIRECTOR CELIA M. PETERSEN, P.E.	SHEET NO. 36
DATE 1-27-2014	SCALE AS SHOWN

Top Shared Priorities

- Maintain current locations and garden designs while enhancing the features within these spaces.

  The overall site plan and design of the East 111th Street Site must be considered. Current locations of the community gardens should be maintained only if: ***a)*** *They continue to receive sufficient sunlight to raise a healthy garden within the proposed development scheme, and* ***b)*** *Do not prevent developers from proposing the most efficient and creative Project. Finally, Projects may propose to maintain the current locations of some gardens and not others, if it makes more sense from a site planning perspective.*

- Select a developer willing to work with garden contacts for restoring and maintaining the community gardens on this block.

- Ensure safety from theft and other potential forms of misconduct within these spaces by providing (but not limited to) high quality fencing, lighting, and storage.

- Provide access to a bathroom along with an indoor space for meetings, events, workshops and other garden related activities.

Top Shared Requests

- Storage for supplies
- Access to electricity for basic garden activities
- Semi to regular access to indoor communal space for meetings and community programming during cold or bad weather
- Ongoing communication between garden contacts and building management

Top Shared Wish Items

- Garden furniture
- High quality sheds
- Weather-resistant bulletin boards
- Internal water source -OR- Rainwater harvesting systems

Garden Profiles

Chenchita's Group Garden

Minimum & Maxium Square Footage for Restoring Chenchita's Group Garden

*Minimum: **4,229.4 sq ft**

Maximum: **6,510 sq ft**

*Minimum square footage is based on the area that the garden group has been licensed to use and the maximum square footage is based on the area the garden group currently uses.

Overview: Chenchita's Group Garden

- Registered GT garden since 1991
- Ornamental, agricultural & recreational garden
- 70 members from the neighborhood, local schools & organizations
- Shady space due to tree density (17 established trees)
- 16 growing spaces for food production
- Activities: volunteer days, knitting, arts & crafts, reading for children, garden tours, poetry readings, open mic, small concerts, horticulture, personal food production, youth-managed farmers' markets, cookouts, cooking demos & composting

Trees at Chenchita's Group Garden

- Mulberry (3)
- Dogwood (4)
- Cherry (3)
- Black Locust (2)
- Honey Locust (2)
- Fig (3)
- Apple (2)
- American Elm (2)
- Plum
- Red Pear
- Avocado
- Pear
- Peach
- Pine

Chenchita's Wish list

- Commercial or demo kitchen for garden (ex. cob oven outdoor)
- Outdoor stage for performances
- Farmers' market – youth employment
- Renewable energy – solar panels
- Different color recycling bins
- Community Composting
- School programming
- Rainwater collection
- Bee hive on roof
- Resting station
- Rooftop garden
- Greenhouse
- Grill

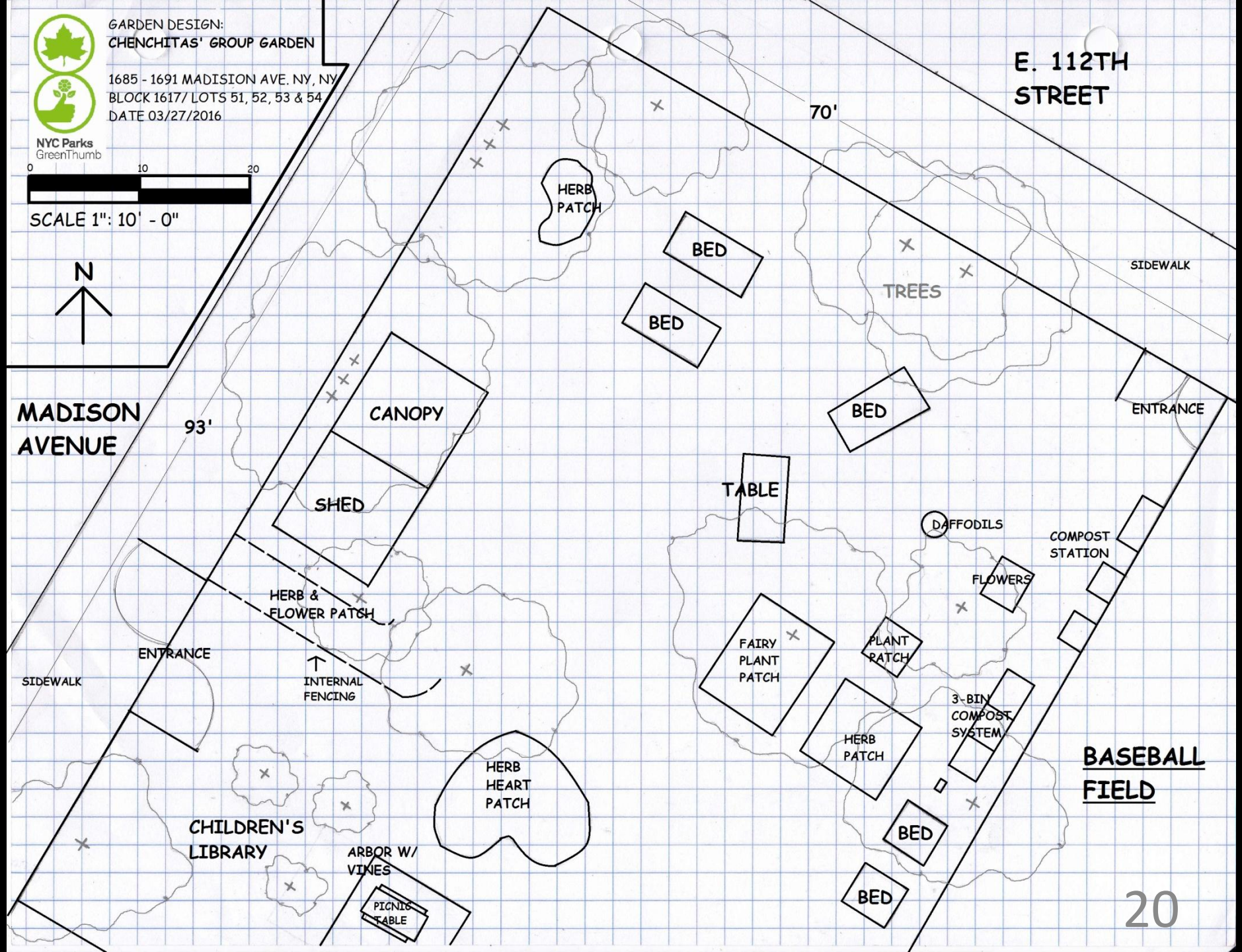
GARDEN DESIGN:
CHENCHITAS' GROUP GARDEN
1685 - 1691 MADISION AVE. NY, NY
BLOCK 1617/ LOTS 51, 52, 53 & 54
DATE 03/27/2016
NYC Parks GreenThumb
0
10
20
SCALE 1": 10' - 0"
N
E. 112TH STREET
70'
HERB PATCH
BED
BED
TREES
SIDEWALK
BED
ENTRANCE
MADISON AVENUE
93'
CANOPY
SHED
TABLE
DAFFODILS
COMPOST STATION
FLOWERS
HERB & FLOWER PATCH
ENTRANCE
SIDEWALK
INTERNAL FENCING
FAIRY PLANT PATCH
PLANT PATCH
3-BIN COMPOST SYSTEM
HERB PATCH
BASEBALL FIELD
HERB HEART PATCH
CHILDREN'S LIBRARY
ARBOR W/ VINES
PICNIC TABLE
BED
BED

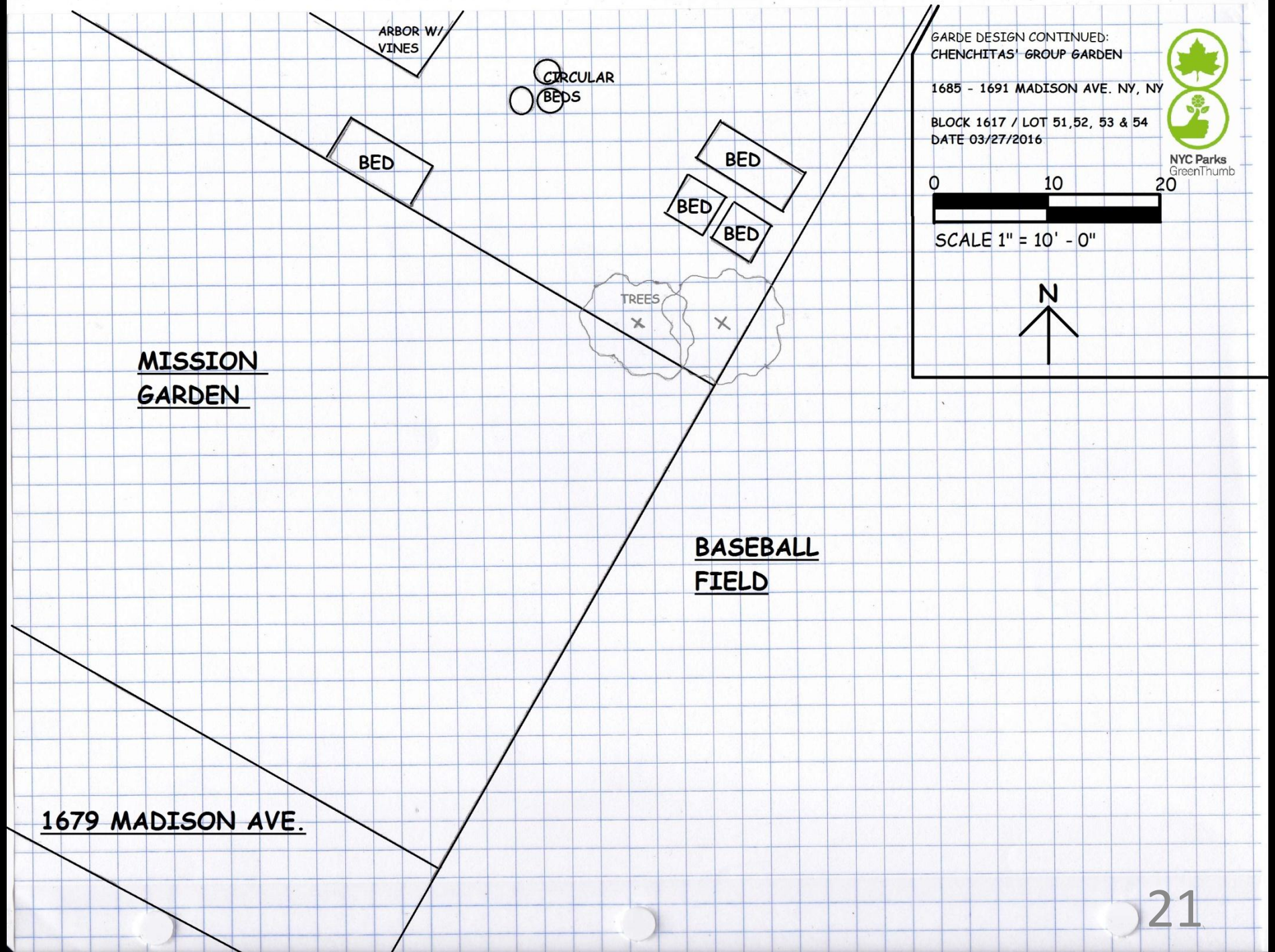
GARDE DESIGN CONTINUED:
CHENCHITAS' GROUP GARDEN
1685 - 1691 MADISON AVE. NY, NY
BLOCK 1617 / LOT 51,52, 53 & 54
DATE 03/27/2016
NYC Parks
GreenThumb
0
10
20
SCALE 1" = 10' - 0"
N
ARBOR W/
VINES
CIRCULAR
BEDS
BED
BED
BED
BED
TREES
MISSION
GARDEN
BASEBALL
FIELD
1679 MADISON AVE.

Workshop

Cooking Demo

Volunteer Day with U.N.

Mission Garden

Minimum & Maxium Square Footage for Restoring Mission Garden

*Minimum: **1,925 sq ft**

Maximum: **3,360 sq ft**

*Minimum square footage is based on the area that the garden group has been licensed to use and the maximum square footage is based on the area the garden group currently uses.

Overview: Mission Garden

- Registered GT garden since 1992
- Ornamental, agricultural & recreational garden
- 50 members from the neighborhood, seniors, local schools, & organizations
- About 20% of garden used for food production
- Shady in the front due to tree coverage
- 9 trees total, all fruit trees
- Activities: volunteer days, cookouts, small concerts, horticulture, build-days, personal food production, back to school events, children activities, & cooking demos

Mission’s Tree

- Peach (3)
- Pear (2)
- Apple
- Parmesan
- Fig
- Cherry

Mission's Wish List

- Maintain and restore preexisting pig roast , rice cooker, casita, & wash station
- Incorporate garden structures in rainwater collection
- Membership cards or contact cards
- Entertainment & computer center for kids
- Compost, soil, & new plant boxes
- Food for the homeless
- Back to school programming
- Space and activities for seniors
- Bible classes

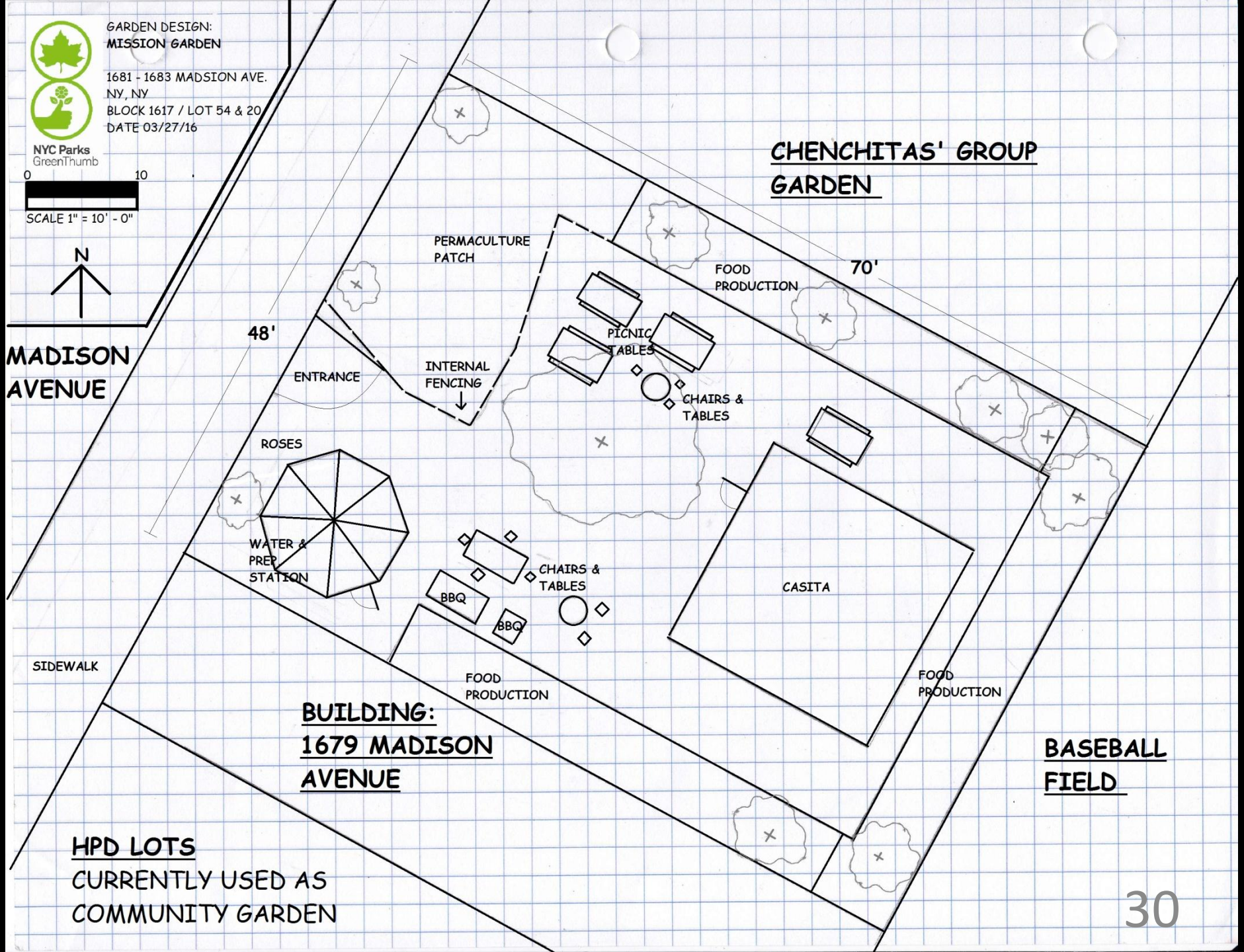
GARDEN DESIGN:
MISSION GARDEN
1681 - 1683 MADSION AVE.
NY, NY
BLOCK 1617 / LOT 54 & 20
DATE 03/27/16
NYC Parks
GreenThumb
0
10
SCALE 1" = 10' - 0"
N
MADISON AVENUE
48'
70'
CHENCHITAS' GROUP GARDEN
PERMACULTURE PATCH
FOOD PRODUCTION
PICNIC TABLES
CHAIRS & TABLES
ENTRANCE
INTERNAL FENCING
ROSES
WATER & PREP STATION
CHAIRS & TABLES
BBQ
BBQ
CASITA
SIDEWALK
FOOD PRODUCTION
FOOD PRODUCTION
BUILDING: 1679 MADISON AVENUE
BASEBALL FIELD
HPD LOTS
CURRENTLY USED AS COMMUNITY GARDEN

Event for Seniors

BBQ

Villa Santurce

Entrance & Casita

Minimum & Maxium Square Footage for Restoring Villa Santurce

*Minimum: **1,992.9 sq ft**

Maximum: **3,618 sq ft**

*Minimum square footage is based on the area that the garden group has been licensed to use and the maximum square footage is based on the area the garden group currently uses.

Overview: Villa Santurce

- Registered GT garden since 1988
- Ornamental, agricultural & recreational garden
- 20 members mainly living in the neighborhood
- 11 trees total, 4 fruit trees
- 8 beds for food production
- Mainly sunny, pockets of shade from trees
- Activities: cookouts, events celebrating Puerto Rican traditions, arts & crafts, & horticulture, holiday events for children

Villa Santurce's Trees

- American Elm (5)
- Pine (2)
- Fig
- Pear
- Plum
- Cherry

Villa Santurce's Wish List

- Reinforce the preexisting structures to protect from weather (ex. add windows to casita)
- Large storage shed for decorations and garden items
- A place for events & festivities (Puerto Rican festival in May and holiday events for children)
- More space for growing fruits and vegetables – currently interested in apple and apricot trees

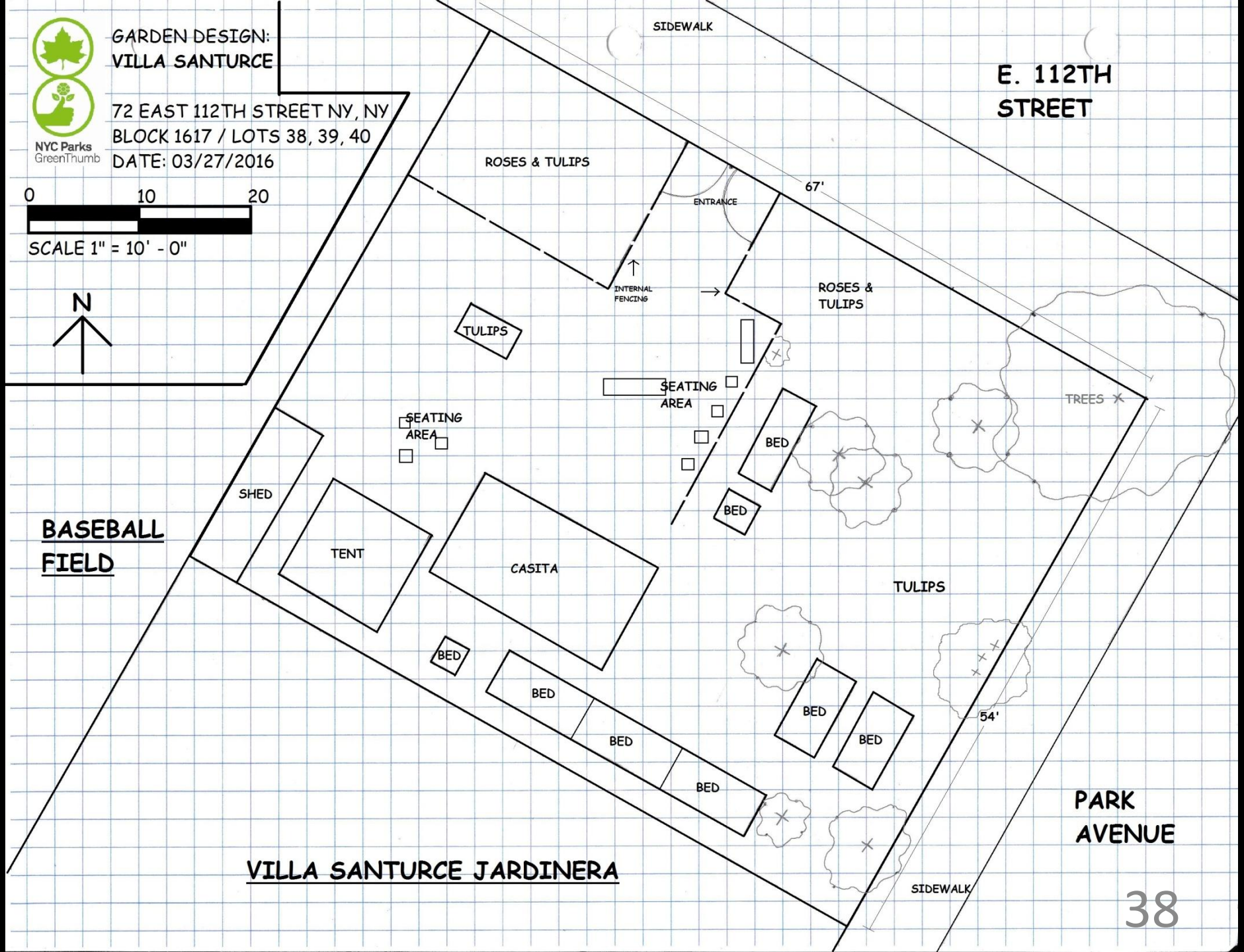
GARDEN DESIGN:
VILLA SANTURCE
72 EAST 112TH STREET NY, NY
BLOCK 1617 / LOTS 38, 39, 40
DATE: 03/27/2016
NYC Parks
GreenThumb
0
10
20
SCALE 1" = 10' - 0"
N
SIDEWALK
E. 112TH
STREET
ROSES & TULIPS
ENTRANCE
67'
INTERNAL
FENCING
ROSES &
TULIPS
TULIPS
SEATING
AREA
SEATING
AREA
TREES
BED
BED
SHED
TENT
CASITA
BASEBALL
FIELD
TULIPS
BED
BED
BED
BED
BED
BED
54'
PARK
AVENUE
VILLA SANTURCE JARDINERA
SIDEWALK

SE Back of Garden

Casita

Villa Santurce Jardinera

Minimum & Maxium Square Footage for Restoring Villa Santurce Jardinera

*Minimum & Maximum: **3,985.8 sq ft**

*The garden group currently uses less square footage, 3,082 sq ft, than it is licensed to use, 3,985.8 sq ft.

Overview: Villa Santurce Jardinera

- Registered GT garden since 1988
- Ornamental & agricultural garden
- 20 members mainly living in the neighborhood
- 4 trees total, 15 hibiscus schrubs
- 14 beds for growing flowers and herbs
- Mainly sunny, pockets of shade from trees
- Activities: upkeep, horticulture & relaxing

Trees

- Cherry
- Pine (2)
- Dogwood

Villa Santurce Jardinera's Wish List

- A place to relax
- Dog waste-bag dispensers
- Elevated raised beds for seniors
- Repair current garden structures
- A space for growing herbs and flowers

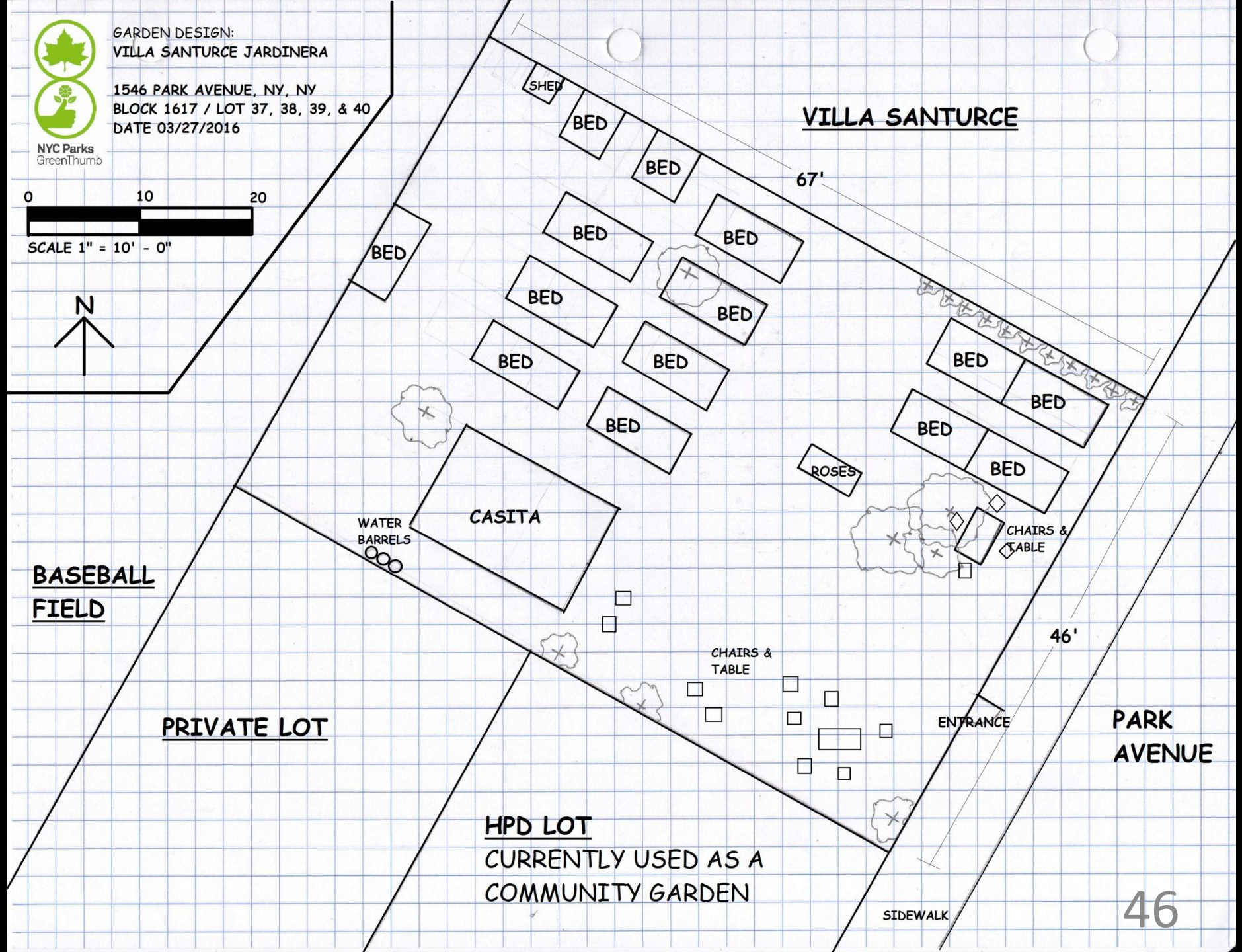
GARDEN DESIGN:
VILLA SANTURCE JARDINERA
1546 PARK AVENUE, NY, NY
BLOCK 1617 / LOT 37, 38, 39, & 40
DATE 03/27/2016
NYC Parks
GreenThumb
0
10
20
SCALE 1" = 10' - 0"
N
VILLA SANTURCE
SHED
BED
67'
CASITA
WATER
BARRELS
ROSES
CHAIRS &
TABLE
46'
ENTRANCE
BASEBALL
FIELD
PRIVATE LOT
HPD LOT
CURRENTLY USED AS A
COMMUNITY GARDEN
SIDEWALK
PARK
AVENUE

Casita

Grow Beds & Cherry Tree

Shadow Analysis of Block 1617 During the Growing Season, April to October

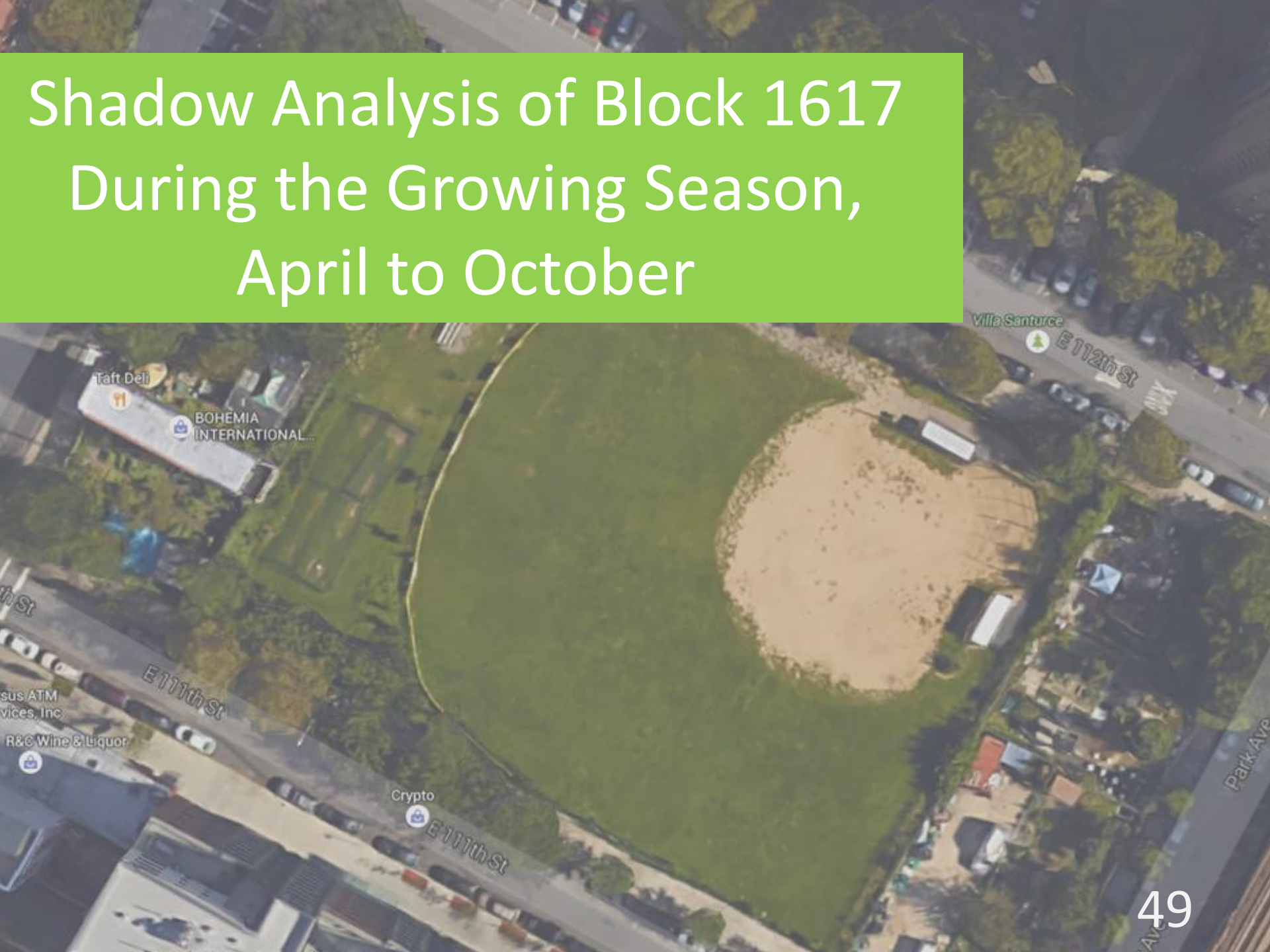

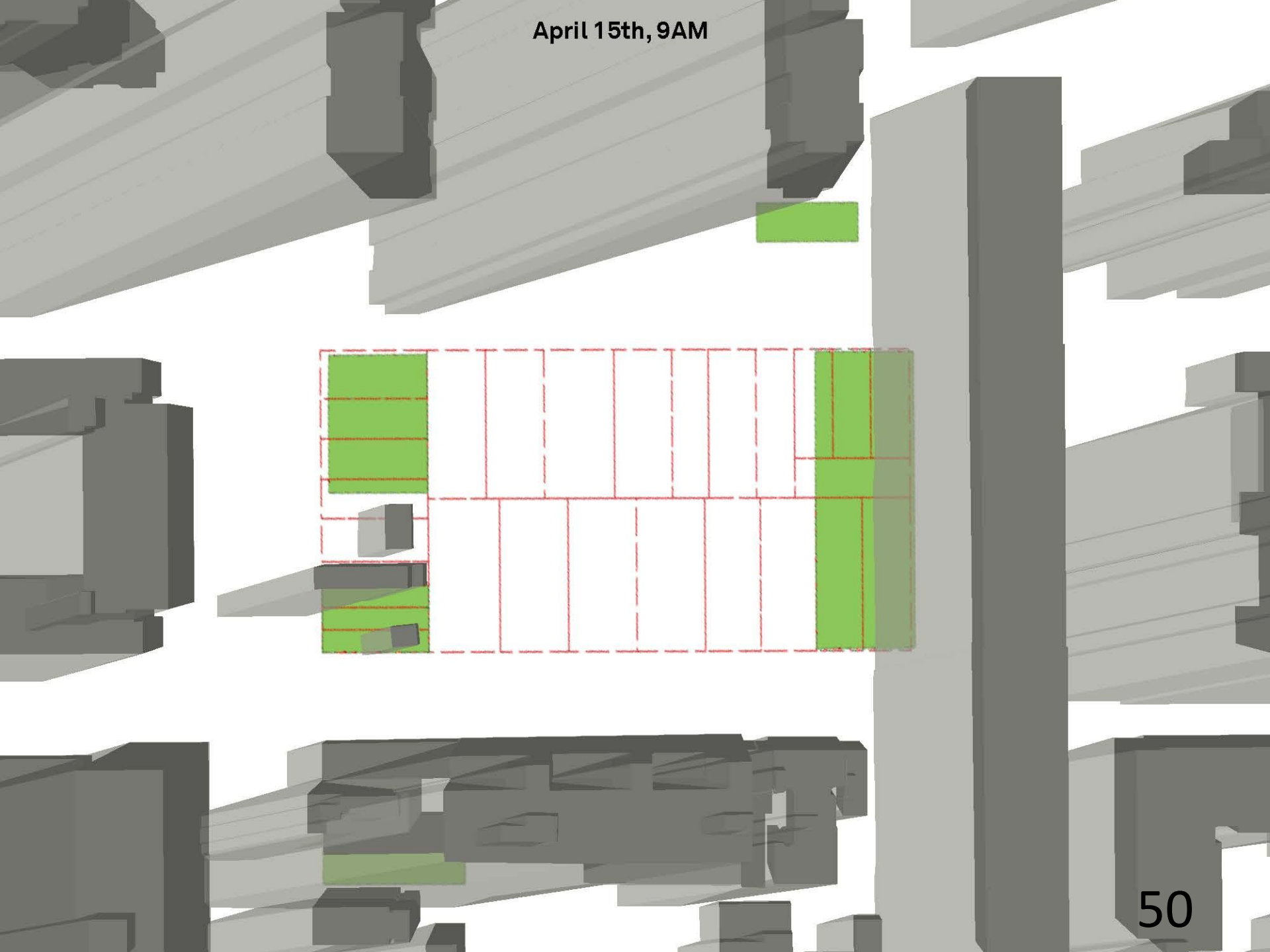
April 15th, 9AM

April 15th, 1PM

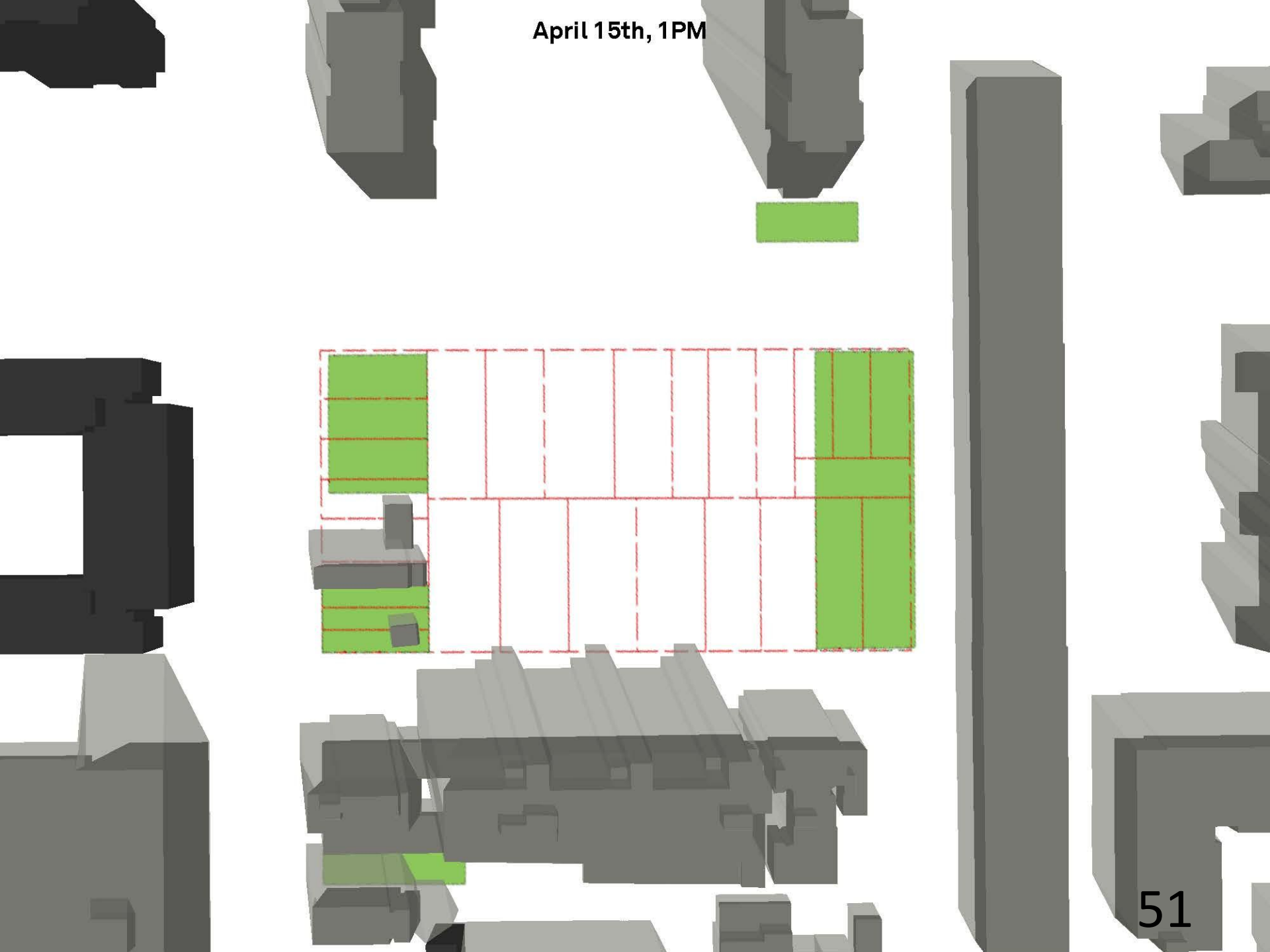

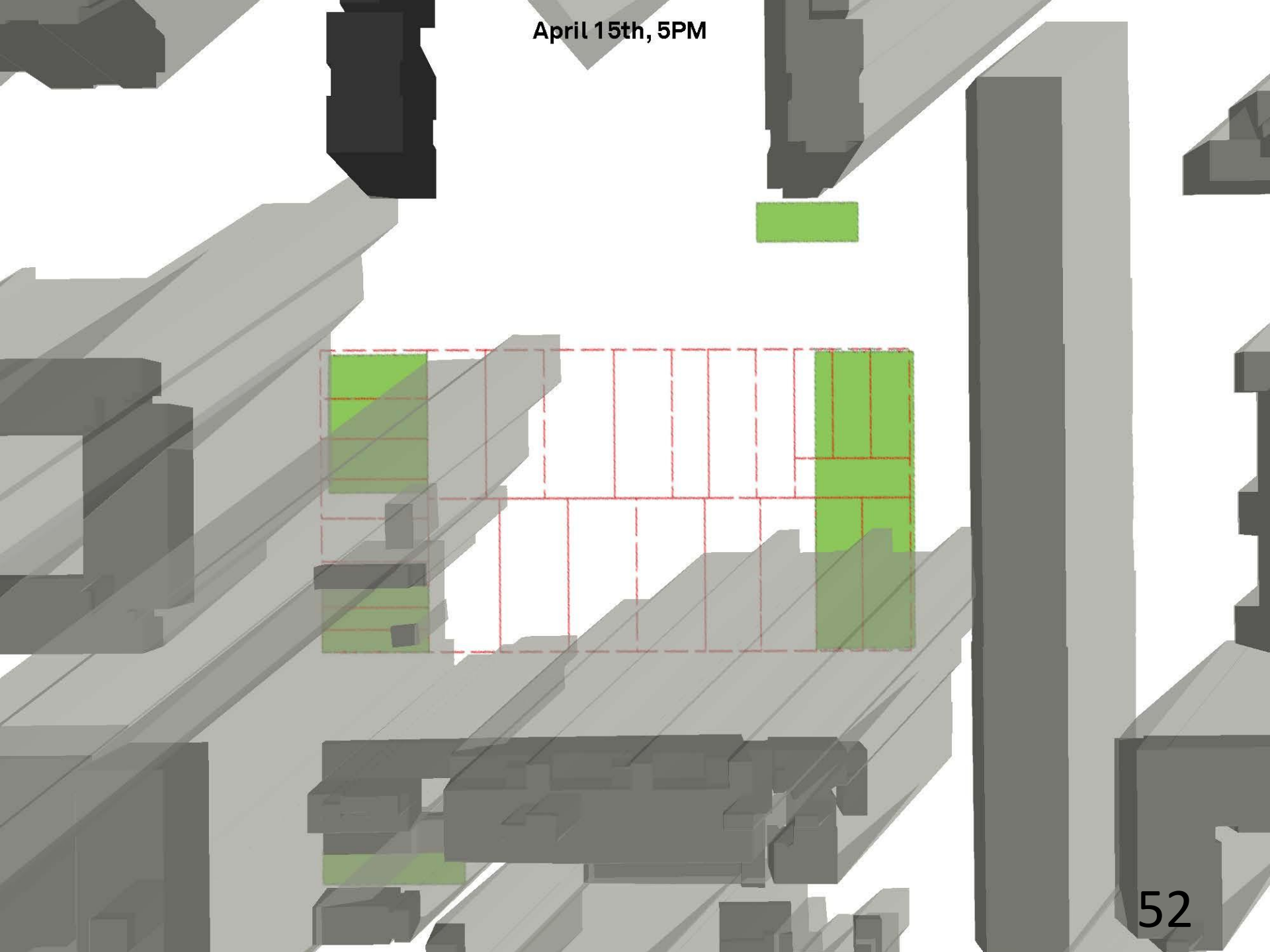
April 15th, 5PM

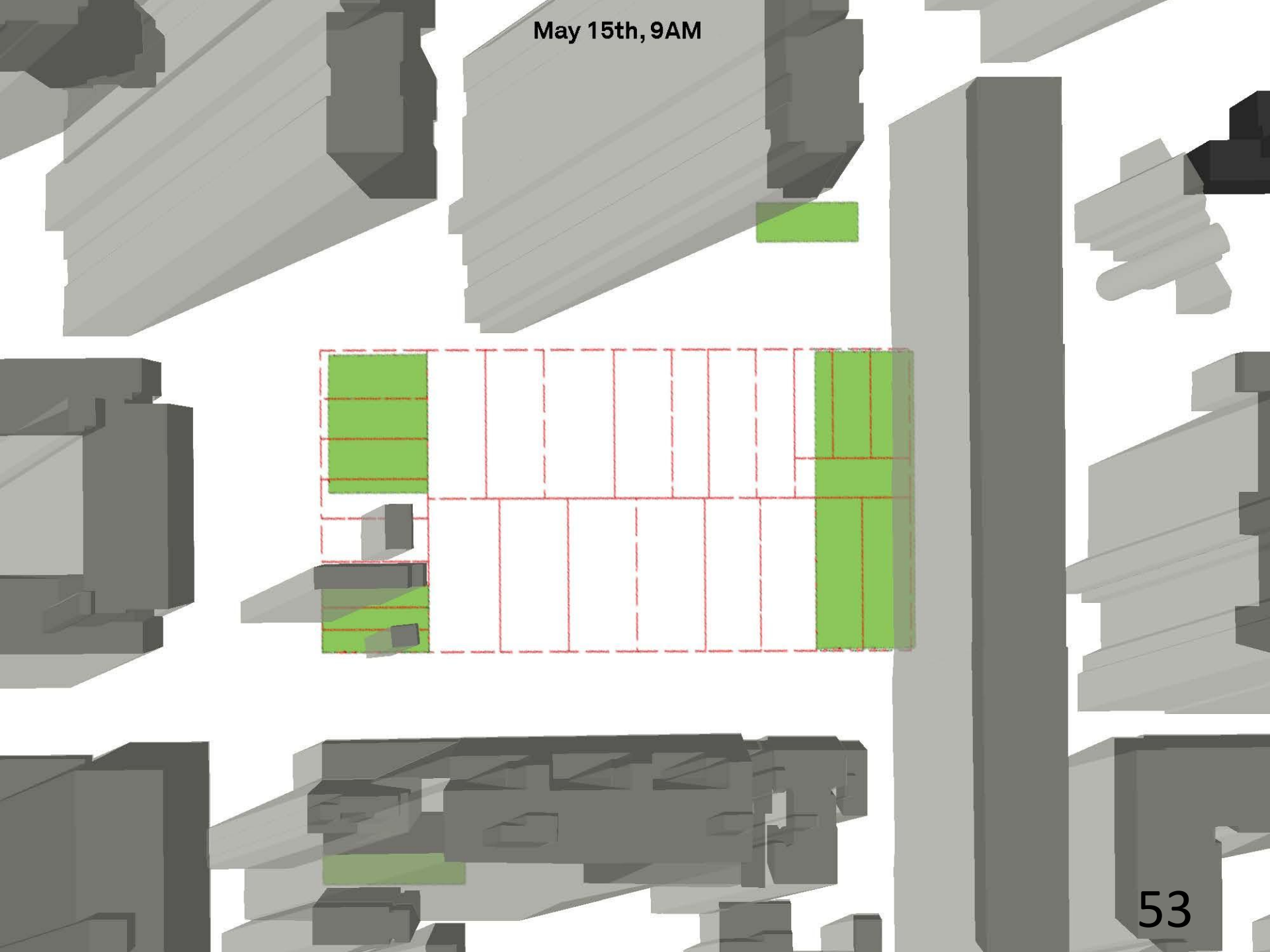
May 15th, 9AM

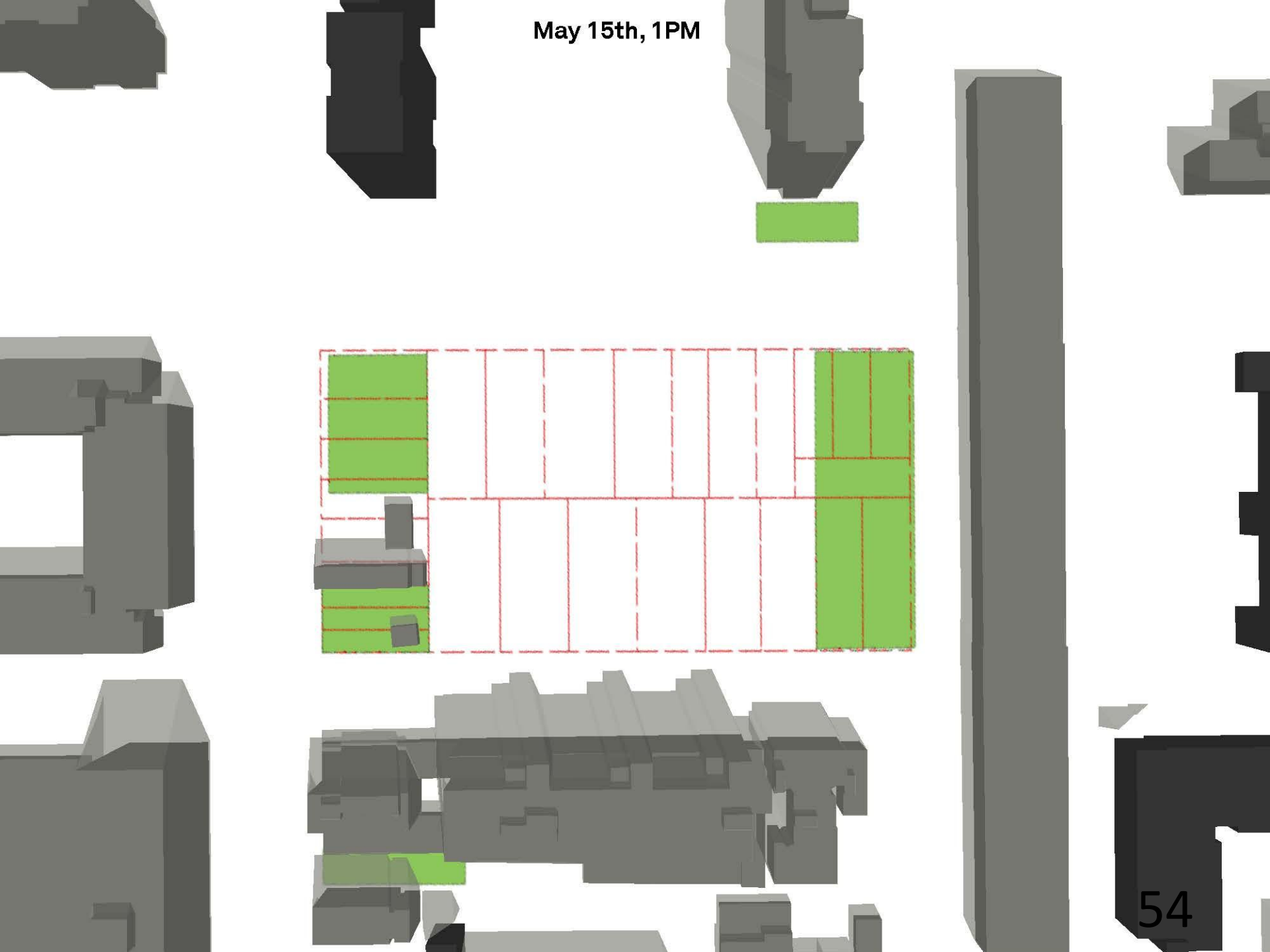
May 15th, 1PM

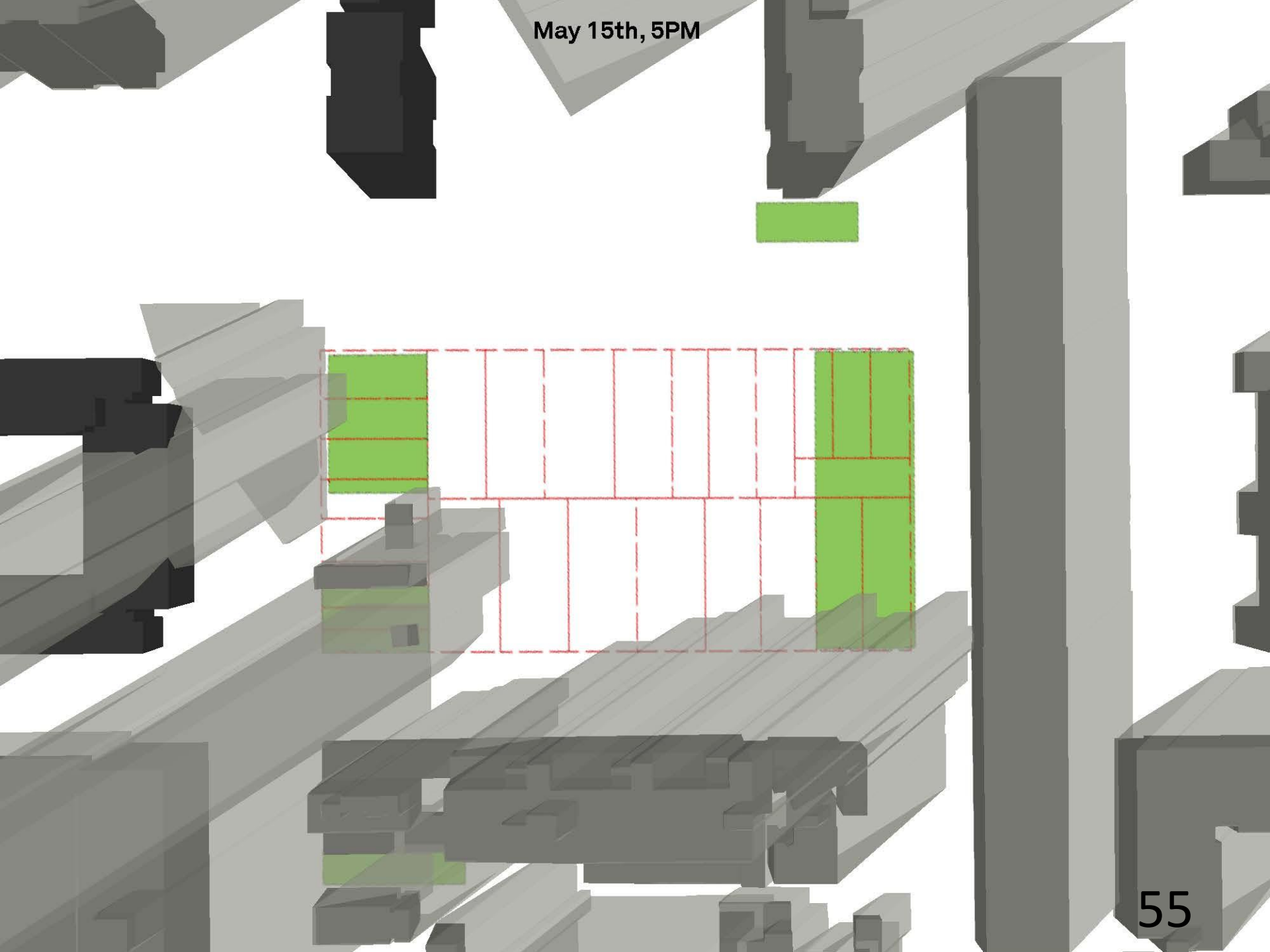
May 15th, 5PM

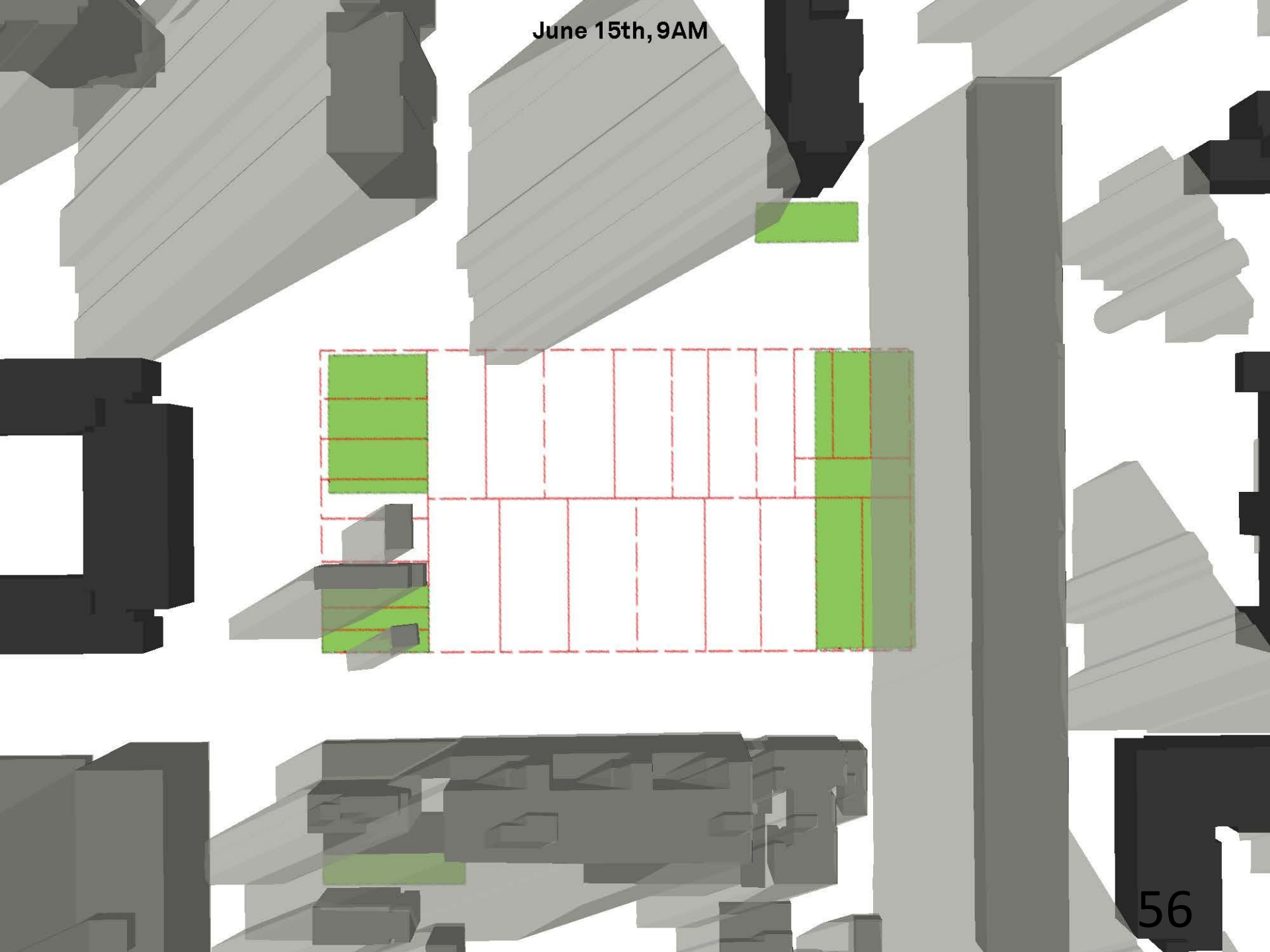
June 15th, 9AM

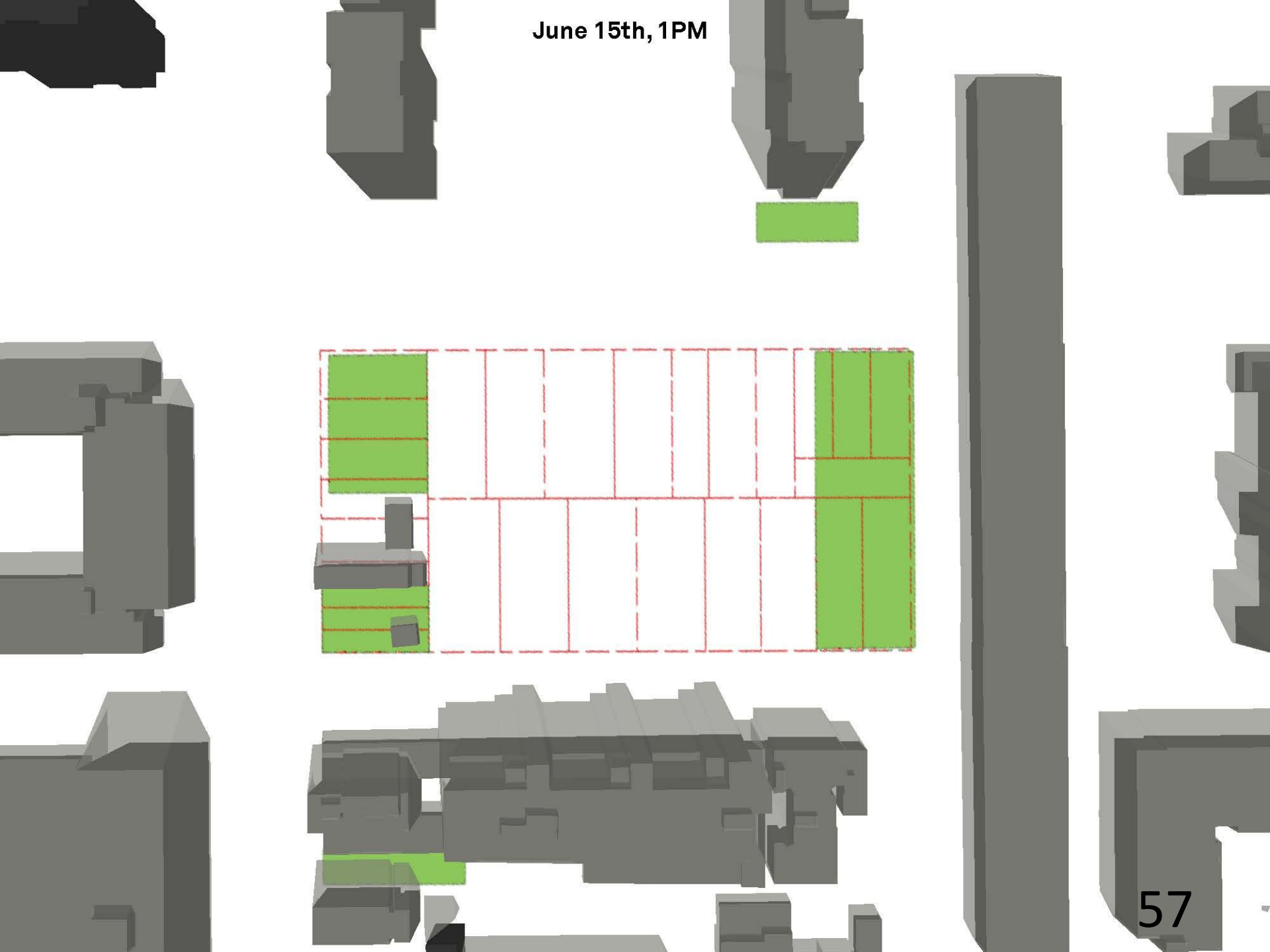
June 15th, 1PM

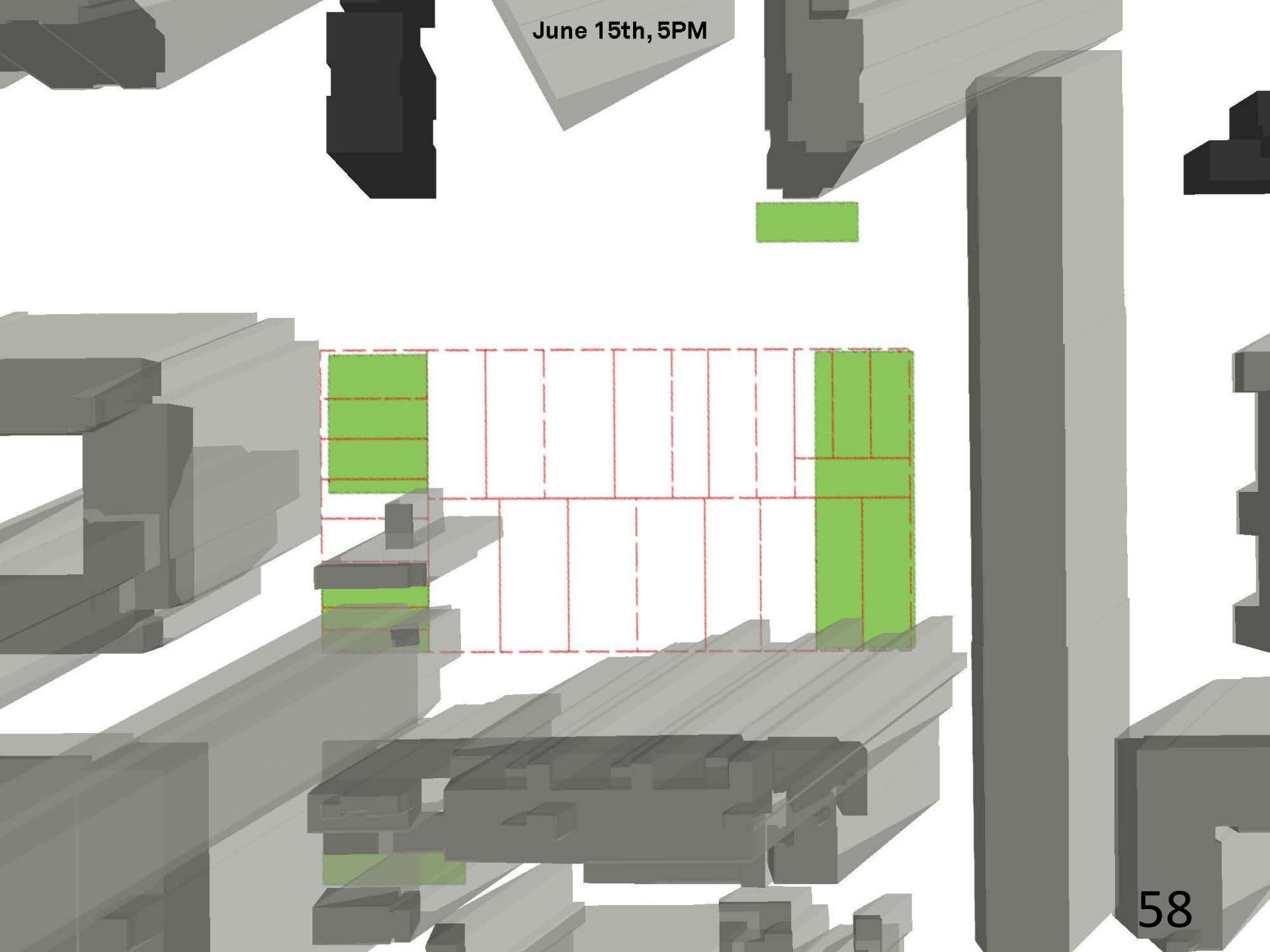
June 15th, 5PM

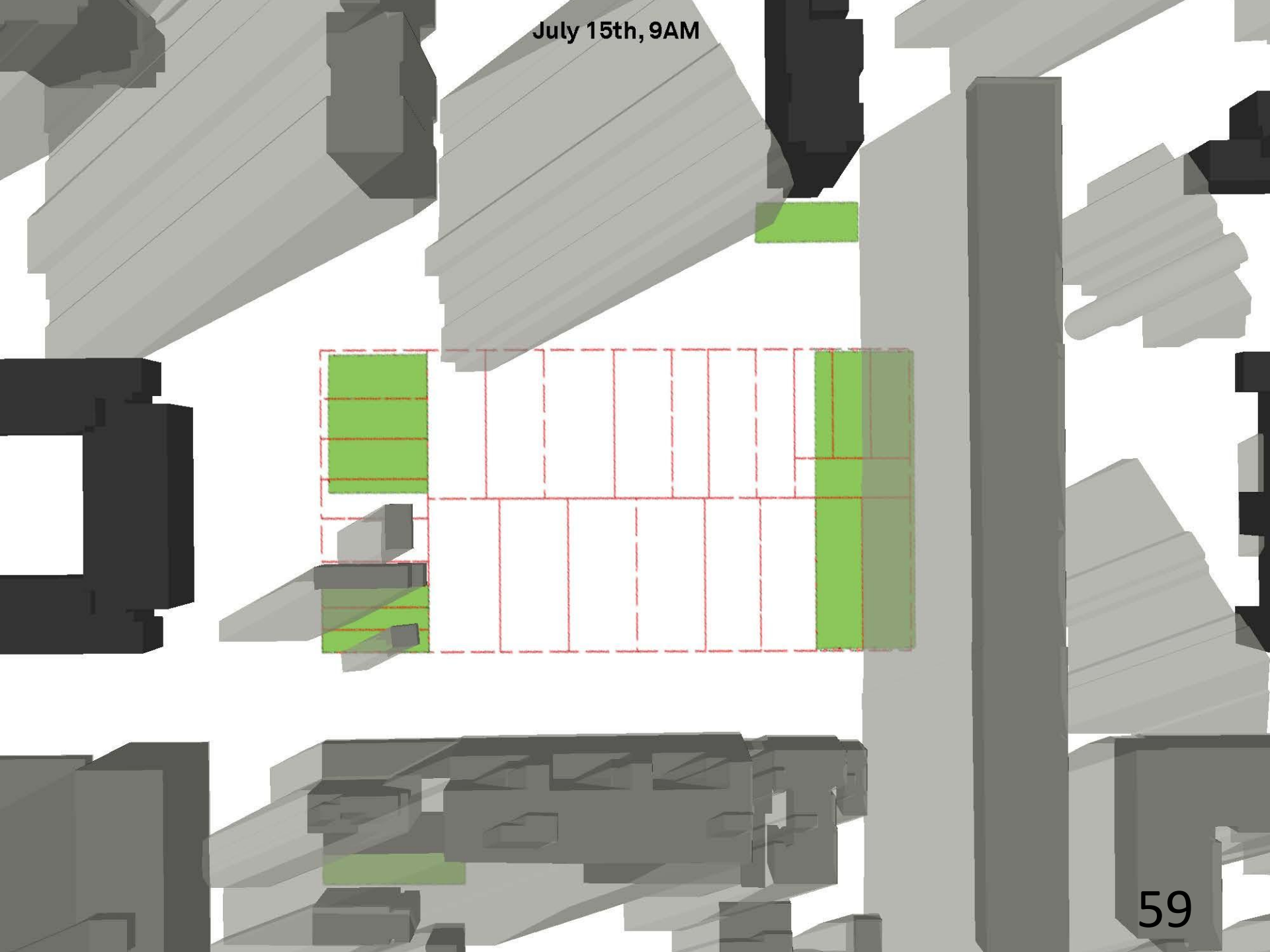
July 15th, 9AM

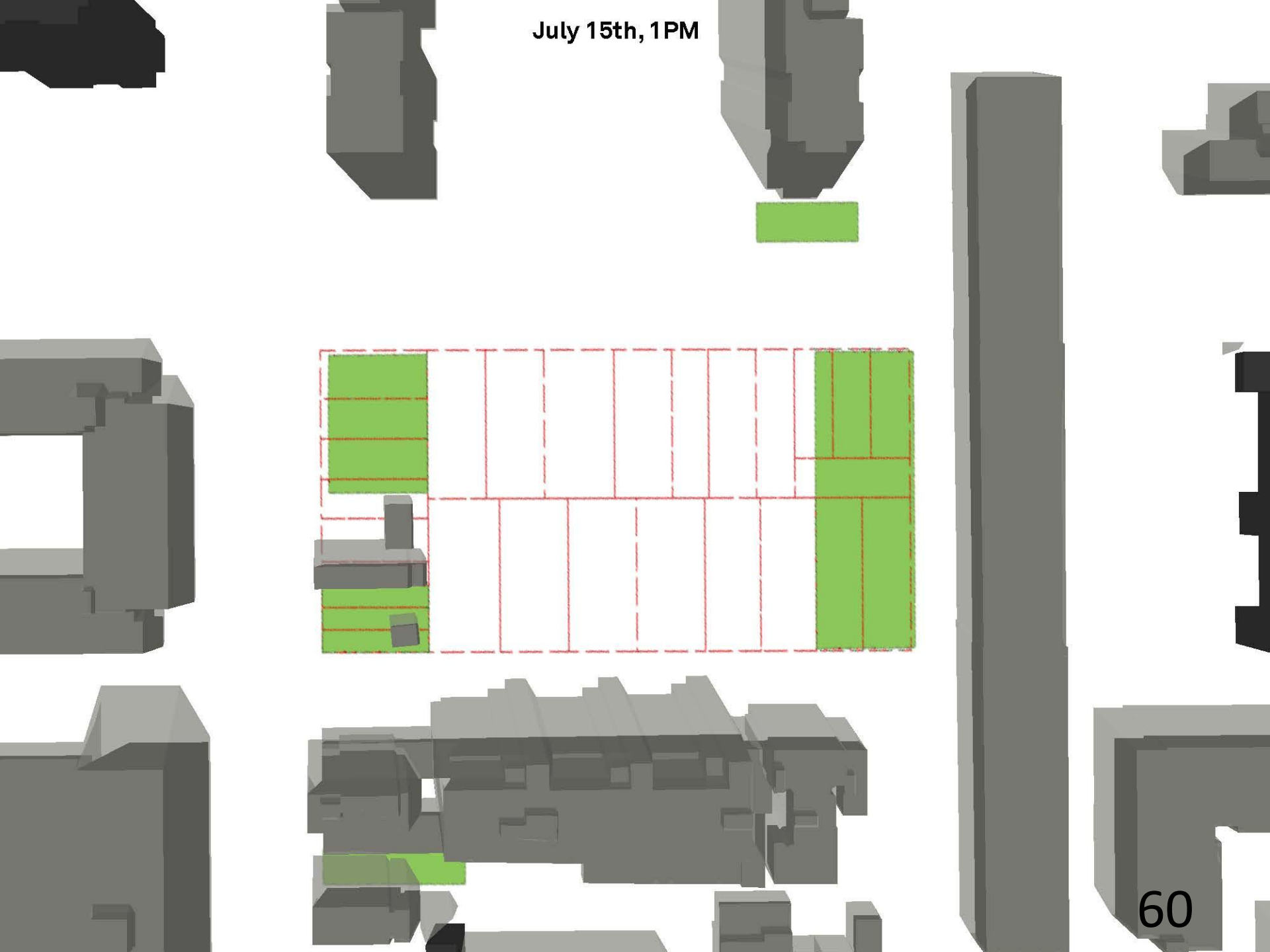
July 15th, 1PM

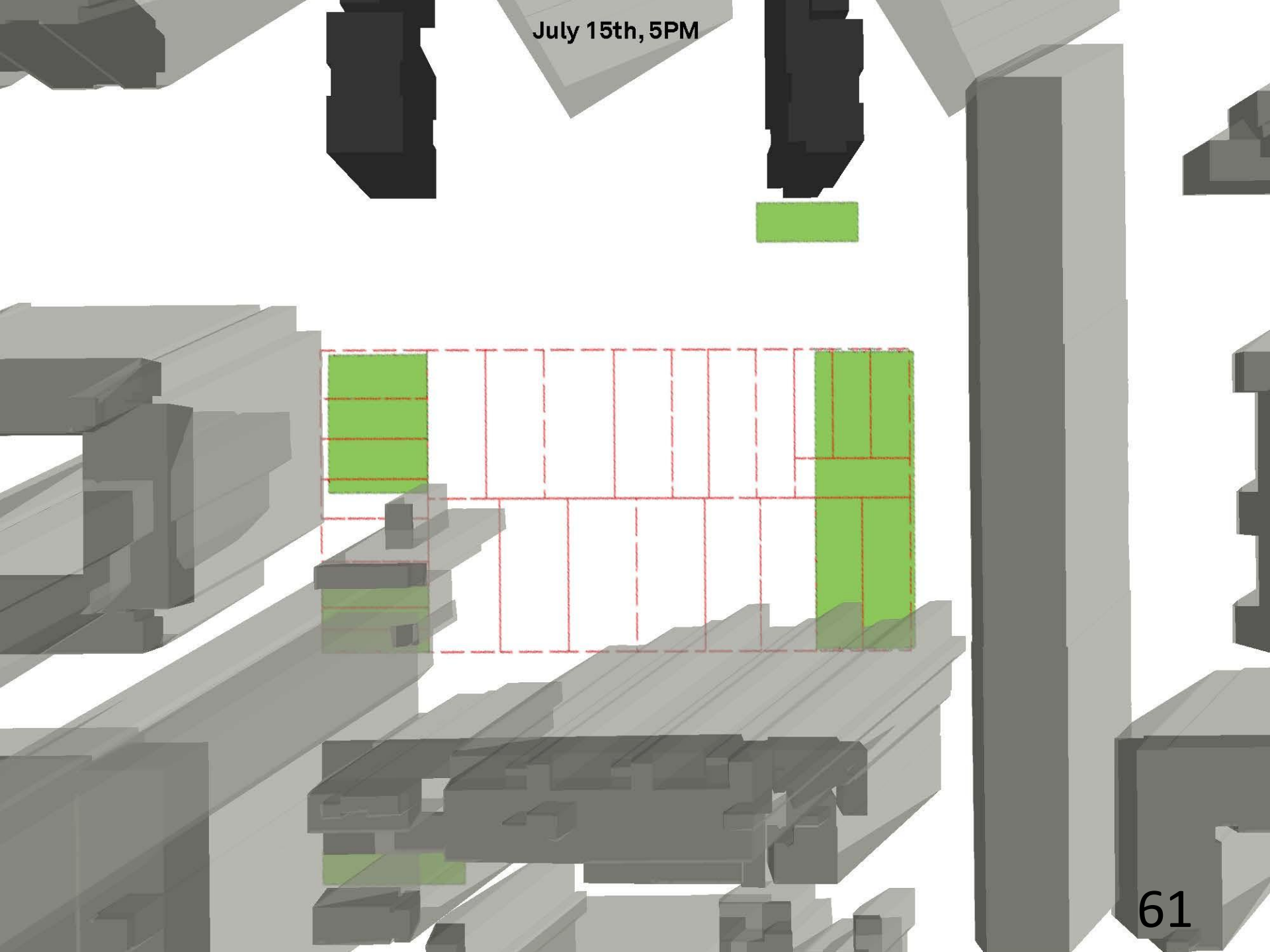
July 15th, 5PM

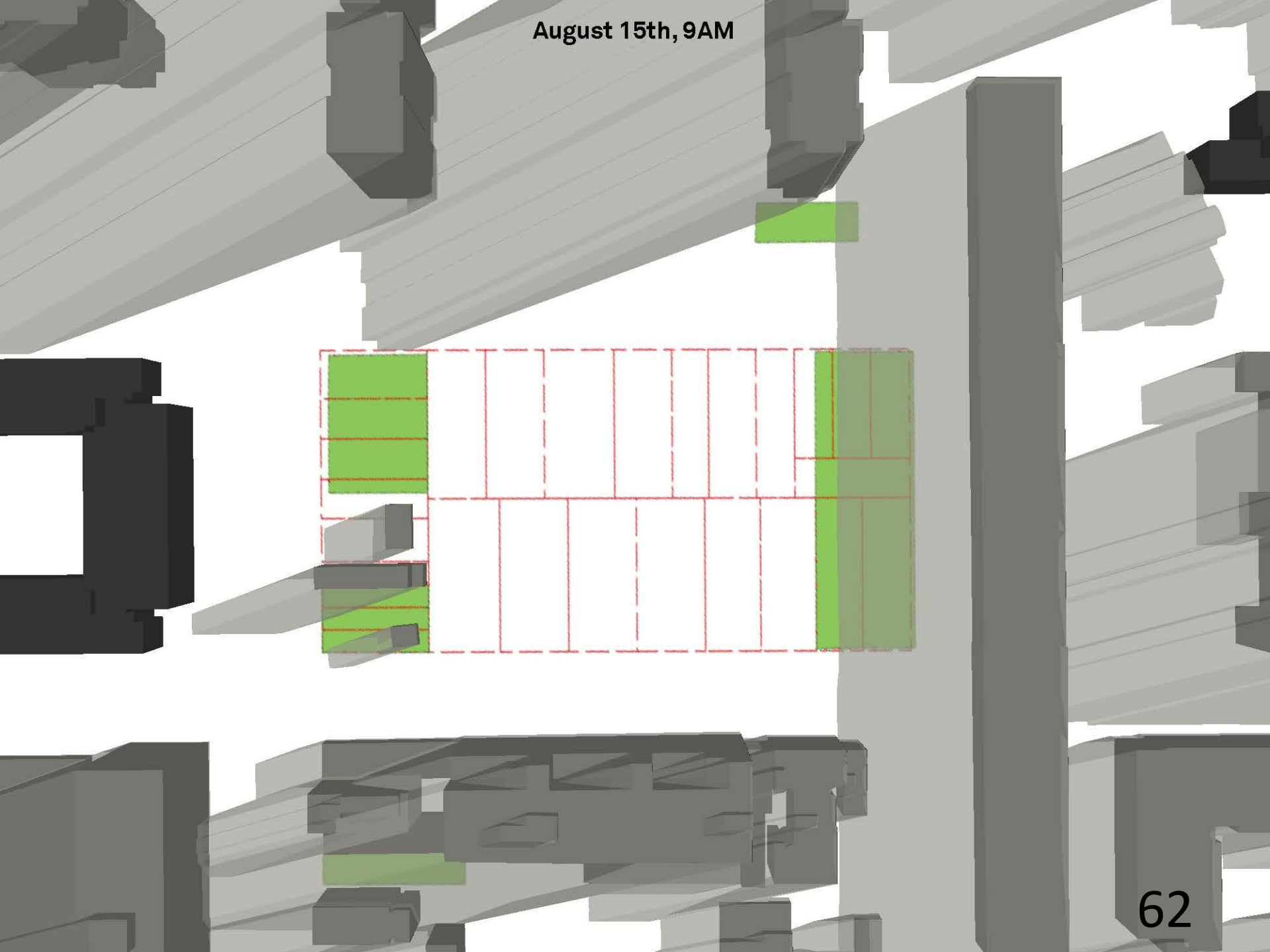
August 15th, 9AM

August 15th, 1PM

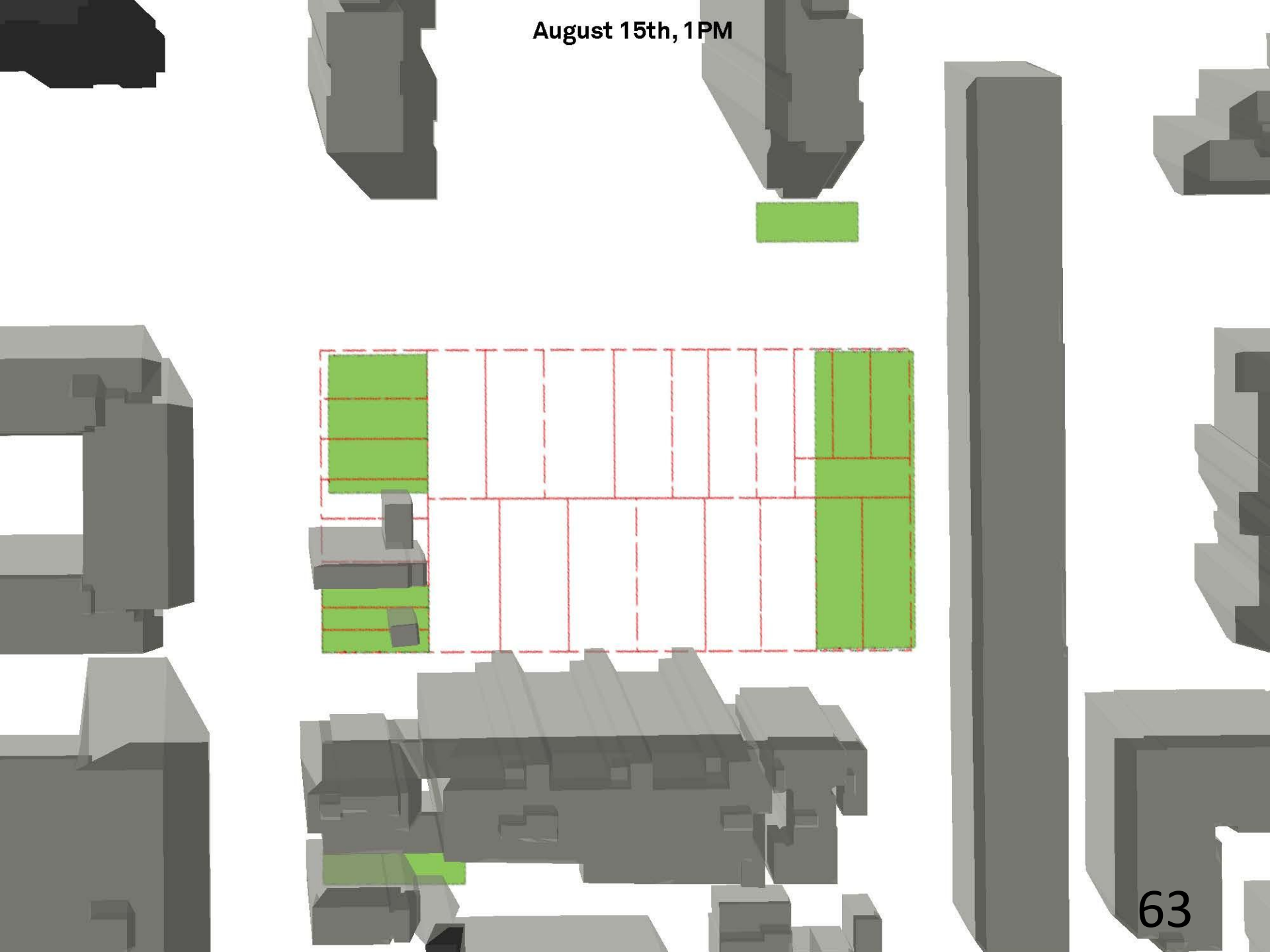

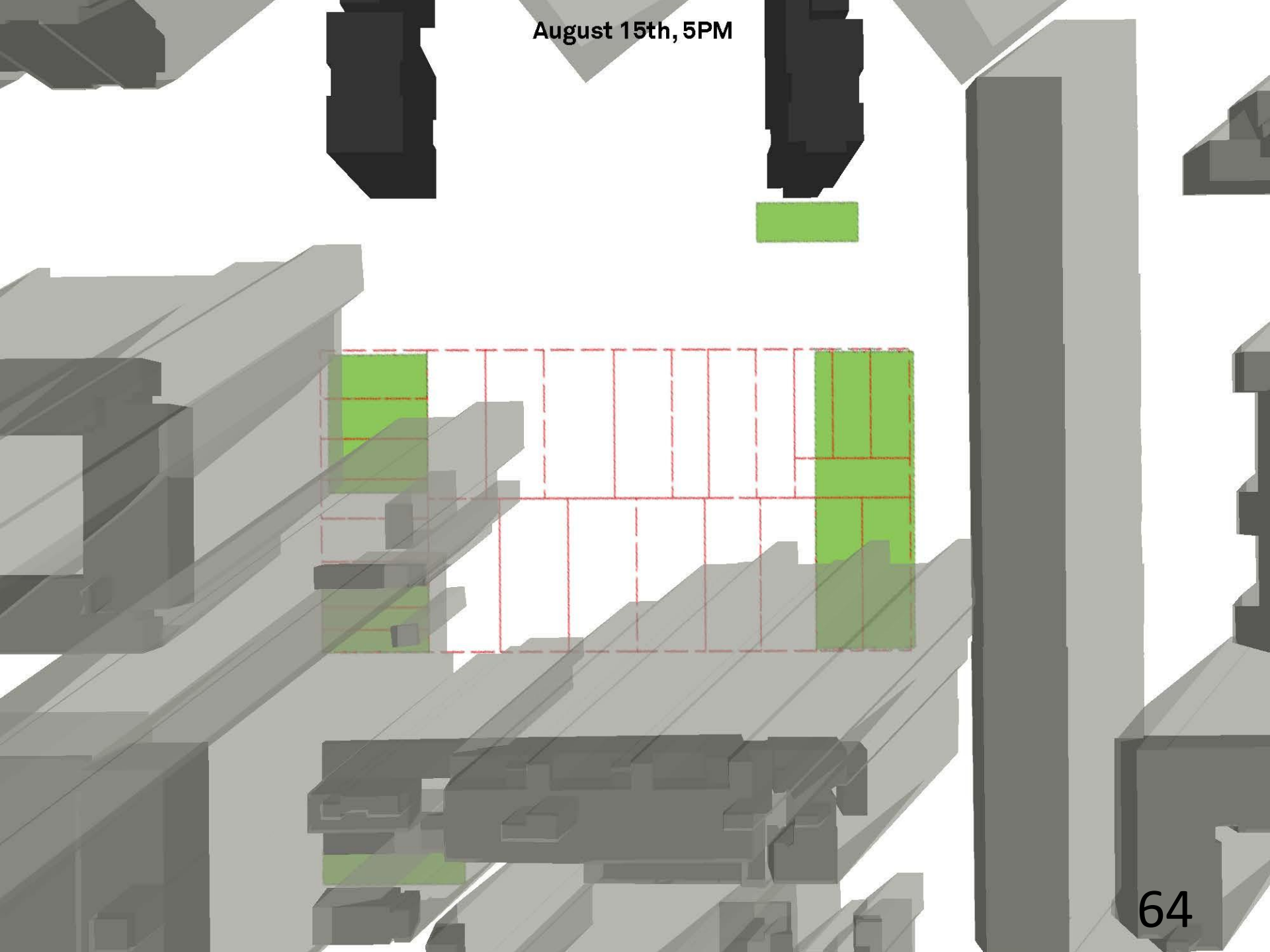
August 15th, 5PM

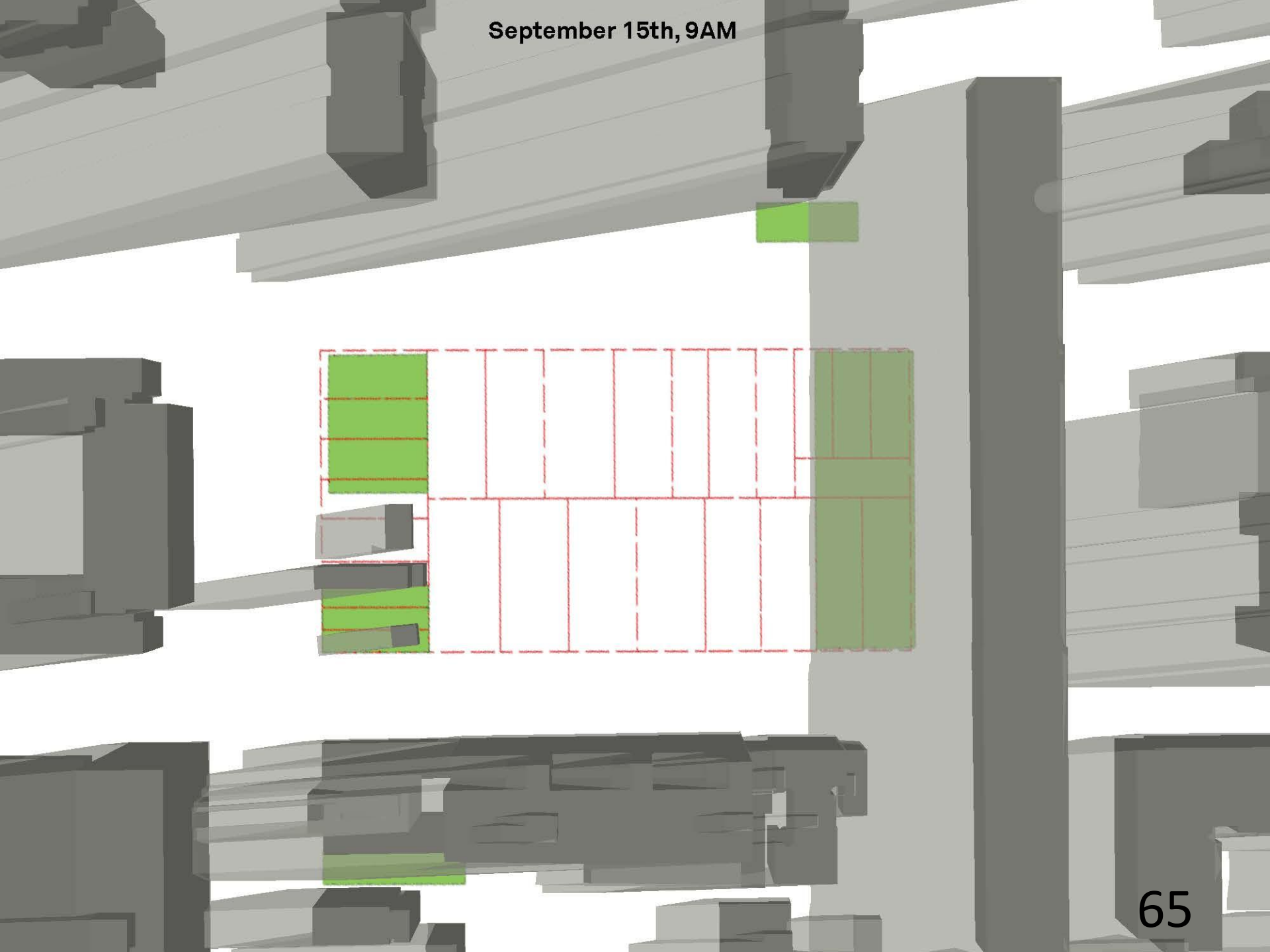
September 15th, 9AM

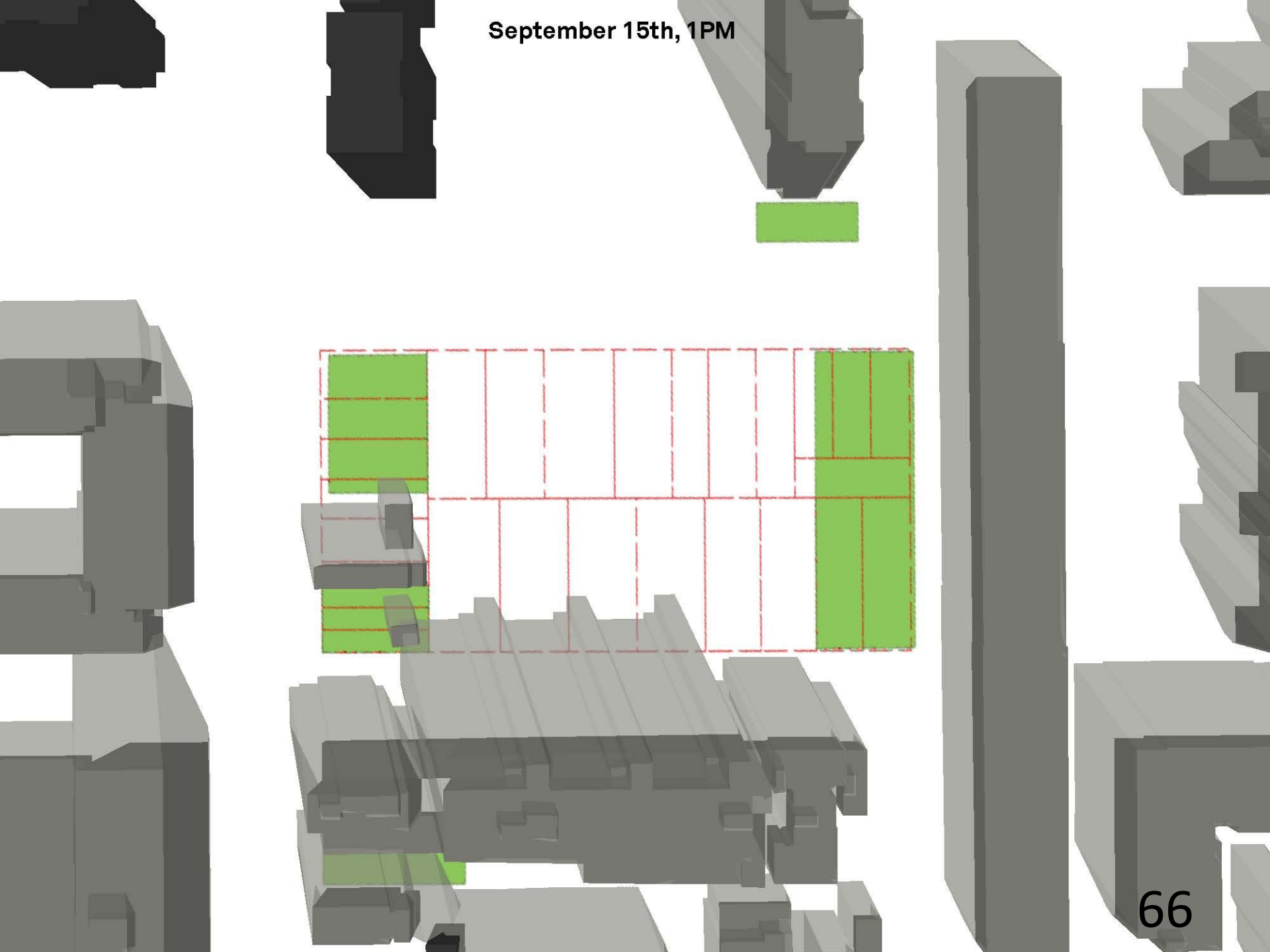
September 15th, 1PM

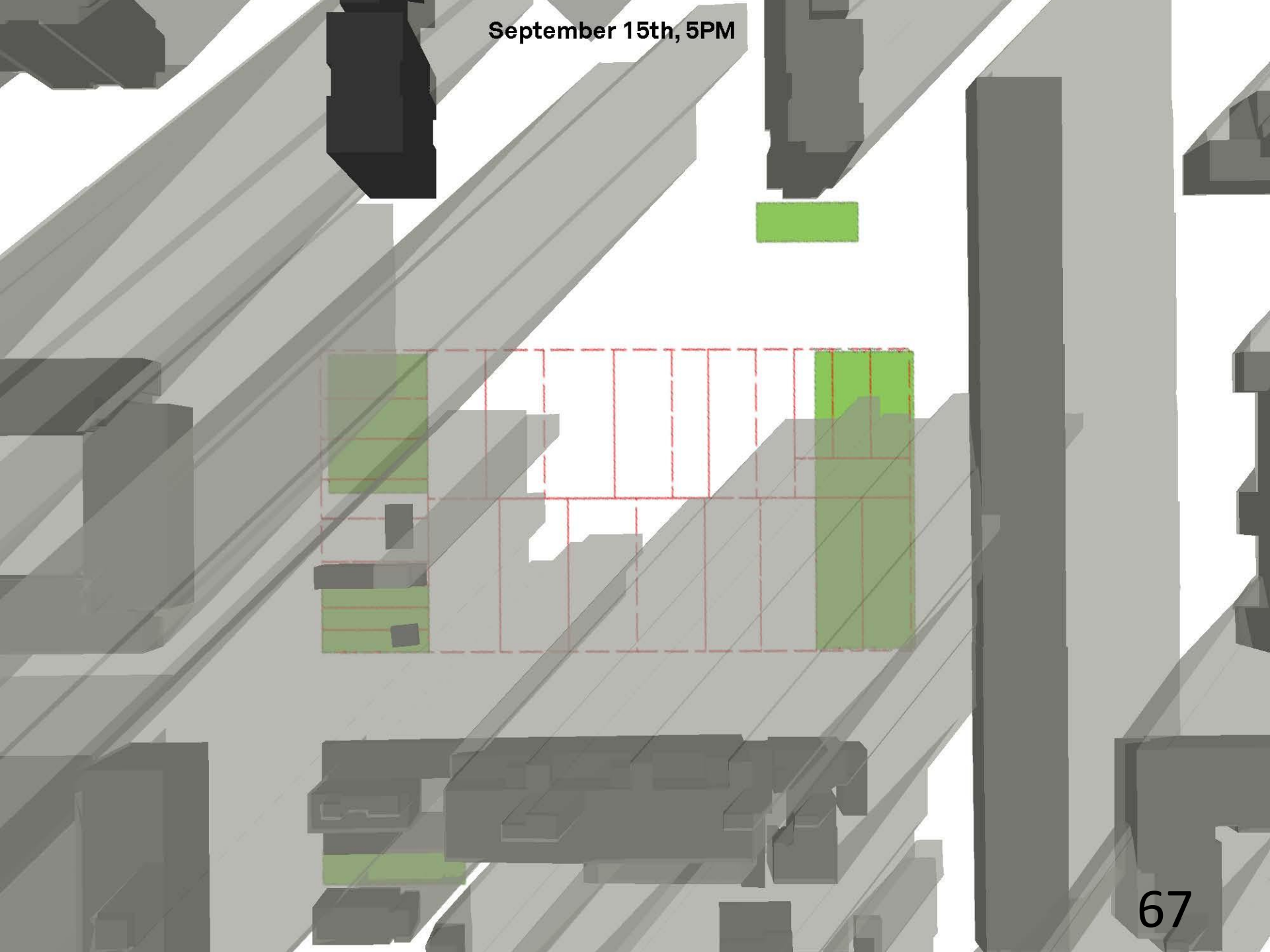
September 15th, 5PM

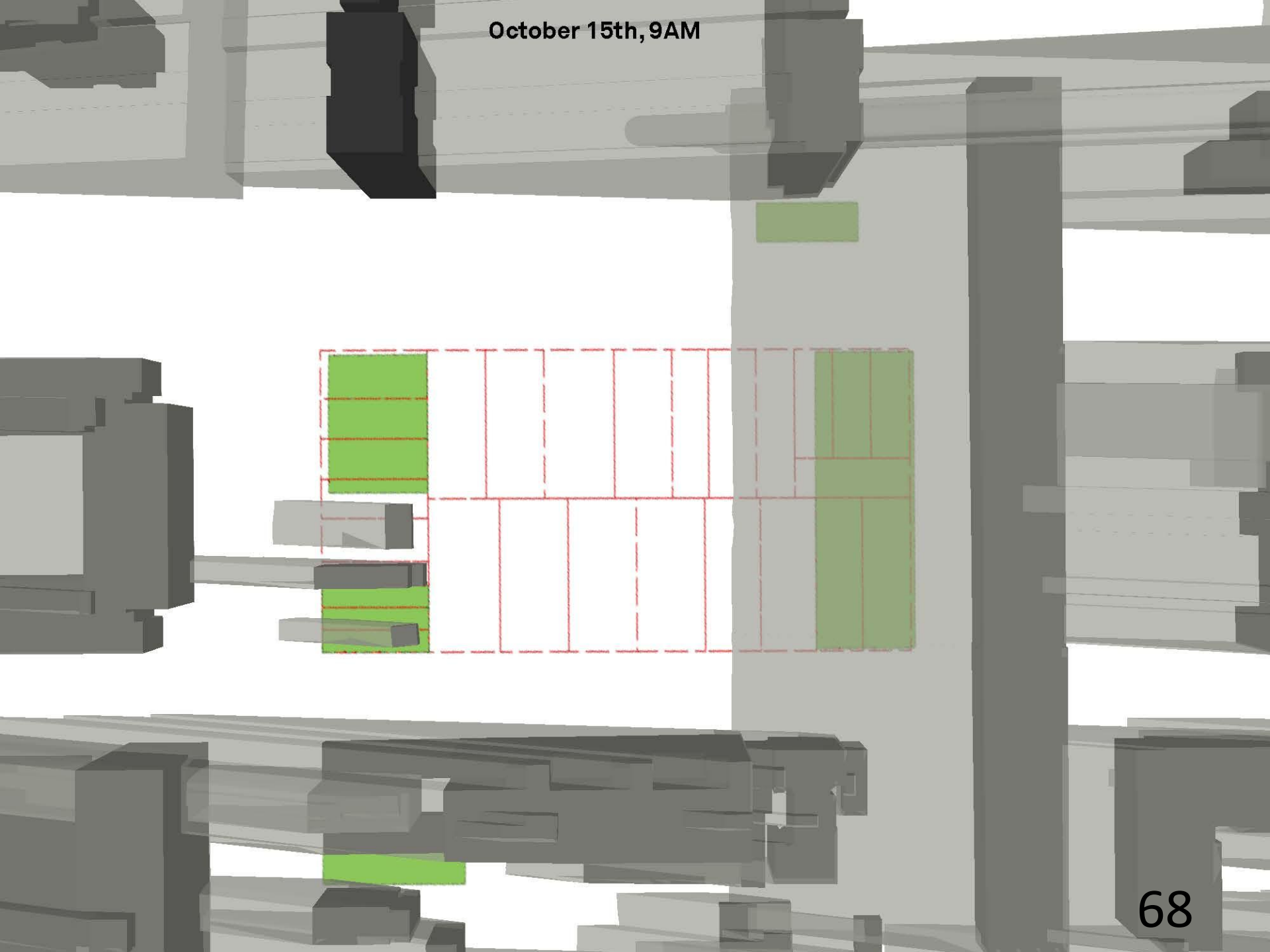
October 15th, 9AM

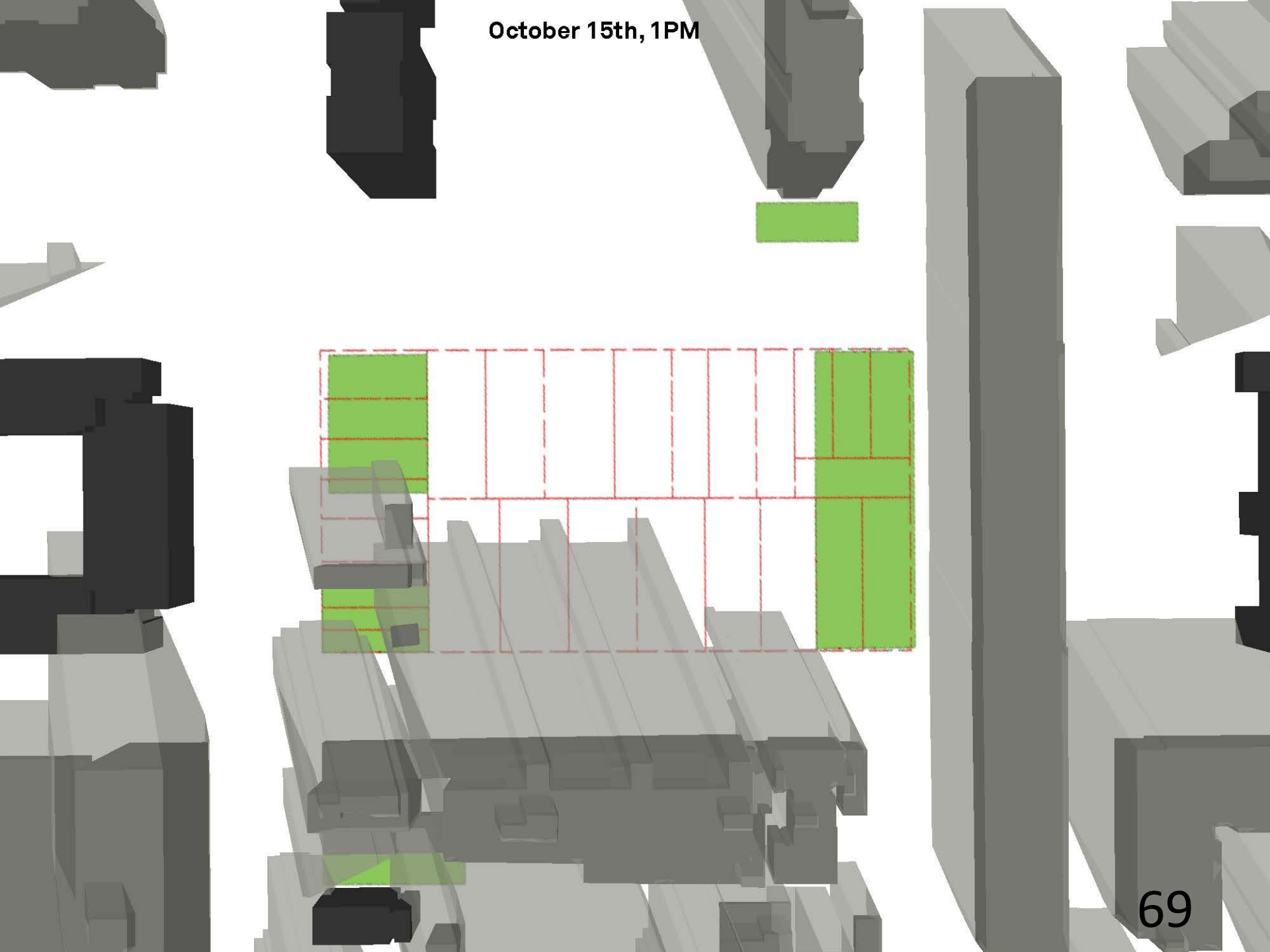
October 15th, 1PM

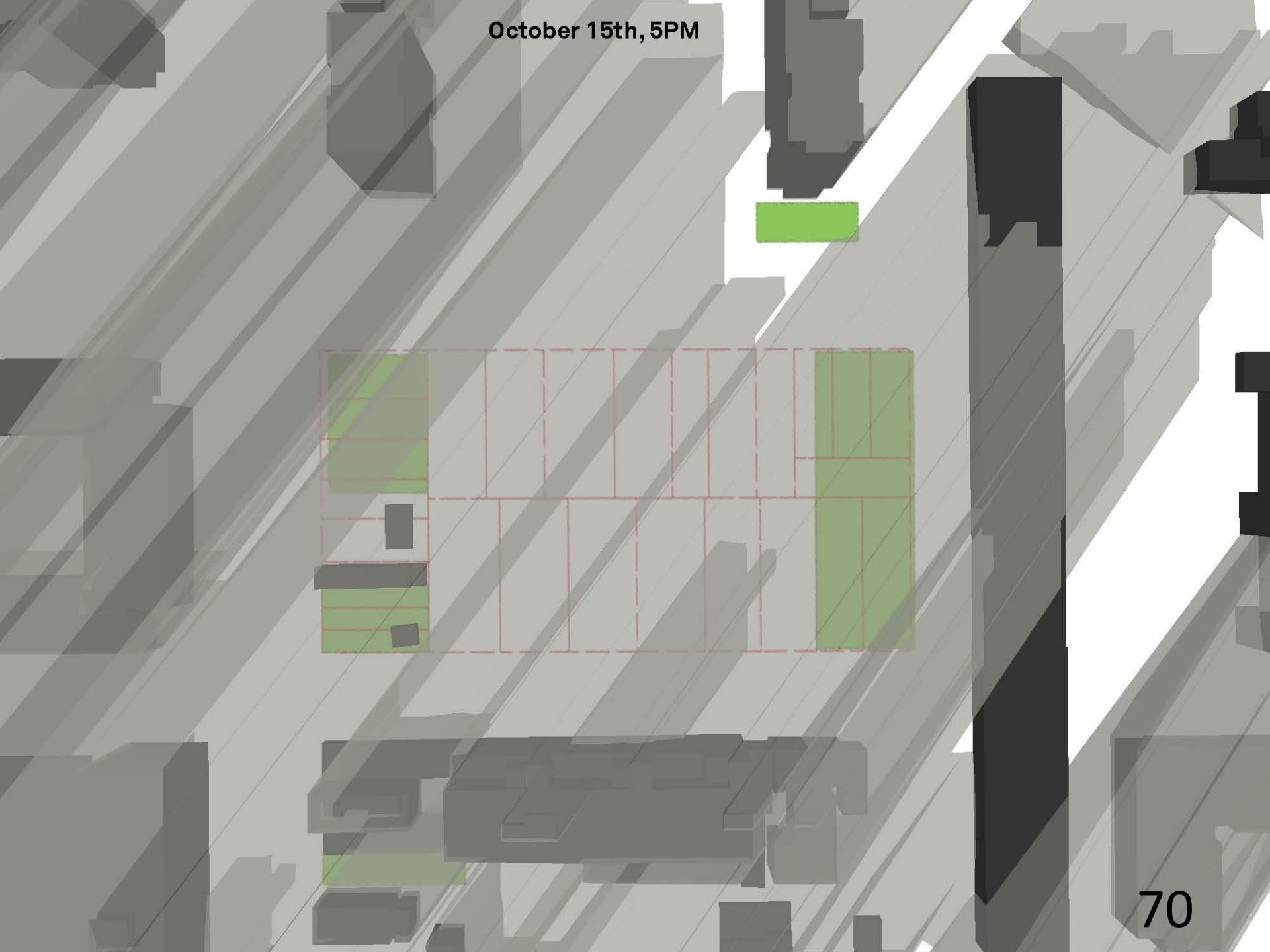
October 15th, 5PM

Thank You

NYC Parks GreenThumb
100 Gold Street, Suite 3100
New York, NY – 10038
(212) 602-5300
www.greenthumbnyc.org

Follow us on Facebook!
www.facebook.com/GreenThumbNYC

Kenneth Williams
Outreach Coordinator for Upper Manhattan
212.602.5306 or k.williams@parks.nyc.gov

APPENDIX C:
East Harlem Neighborhood Plan

FEBRUARY 2016

EAST HARLEM Neighborhood PLAN

Office of City Council Speaker Melissa Mark-Viverito
Manhattan Community Board 11
Community Voices Heard
Manhattan Borough President Gale A. Brewer

EASTHARLEMPLAN.NYC

PREPARED FOR

The East Harlem Neighborhood

PROJECT PARTNERS

Office of City Council Speaker Melissa Mark-Viverito
Manhattan Community Board 11
Community Voices Heard
Manhattan Borough President Gale A. Brewer

STEERING COMMITTEE

32BJ Service Employees International Union
Artimus Construction
CIVITAS
Community Voices Heard
Construction & General Building Laborers Local 79
Councilmember Inez Dickens
El Barrio's Operation Fightback
Elmendorf Reformed Church
El Museo del Barrio
Harlem RBI
Johnson Houses Tenant Association
Lott Community Development Corporation
Manhattan Community Board 11
Manhattan Borough President Gale Brewer
New York Academy of Medicine
New York Restoration Project
Office of City Council Speaker Melissa Mark-Viverito
Renaissance Charter High School for Innovation
Union Settlement Association
Union Settlement Business Development Center
WE ACT for Environmental Justice

FACILITATORS

Hester Street Collaborative
WXY

REPORT PREPARED BY

WXY with
Hester Street Collaborative

GRAPHIC DESIGN

Yeju Choi / Nowhere Office

This report was produced with funds provided by the City of New York and the Neighborhoods First Fund for Community-Based Planning.

ACKNOWLEDGMENTS

Subgroup member organizations

596 Acres
ABC
Africa Center
Art for Change
Artimus Construction
Artspace 109
Association for Neighborhood Housing Development
Blumenfeld Development Group
Bonifacio Senior Center-IPR/HE
Boriken Neighborhood Health Center
Boys & Girls Harbor
Boys Club of New York
Buro Happold
Caribbean Cultural Center African Diaspora Institute
Carter Burden Center
Center for Sustainable Cities at Hunter College
Children's Aid Society
CIVITAS
Clinton Houses TA
Community School District 4 Superintendent
Community Service Society
Community Voices Heard
Coquito Masters
Corbin Hill Farm
Crack is Wack Playground
DDM Development & Services
Deep Water Wind
East Harlem Age-friendly Neighborhood Advisory Committee
East Harlem Chamber of Commerce
East Harlem Community Alliance
East Harlem Community Health Committee
East Harlem District Public Health Office
East Harlem Preservation
East Harlem Restaurant & Bar Association
East Harlem Tutorial Program
East River Houses TA
Ebony Society
El Barrio's Operation Fight Back
El Museo del Barrio
Enterprise Community Partners
Faith in New York
Fierce Nail Spa
Friends of Art Park
Friends of East River Esplanade
Girls Inc.
GreenThumb
Grid Alternatives
Harlem Community Development Corporation
Harlem RBI / DREAM Charter School
Harlem River Park Task Force
Harvest Home
HOPE Community Inc.
Hostos Community College
Hot Bread Kitchen
Hunter College
Renaissance Charter High School for Innovation
Isaacs Center
Johnson Houses TA
La Casa Azul Bookstore
Legal Aid Society
LES Ecology Center/NYC Compost Project
Lettire Construction Corporation
LISC
Little Sisters of the Assumption
Living Lots NYC
Local 79
Lott Community Development Corporation
LSA Family Health Service
Manhattan Borough President Gale Brewer's Office
Manhattan CB11 Housing Committee
Manhattan CB11 Public Safety & Transportation Committee
Manhattan Community Board 11
Manhattan Neighborhood Network
Manhattan North Management Co. Inc.
Mayor's Office of Long-Term Planning and Sustainability
Medianoche
Metro North Houses TA
Metropolitan Waterfront Alliance
Mt. Sinai Hospital
Museum of the City of New York
Mutual Housing Association of New York
New Economy Project
New Harlem East Merchants Association
New York Academy of Medicine
New York Restoration Project
New York State of Mind
New Yorkers for Parks
Northside Center for Child Development
NY Academy of Music
NY Communities for Change
NYC Administration for Children's Services
NYC Climate Panel
NYC Community Garden Coalition
NYC Council Economic and Community Development Division
NYC Department for the Aging
NYC Department of City Planning
NYC Department of Cultural Affairs
NYC Department of Education
NYC Department of Environmental Protection
NYC Department of Health and Mental Hygiene – Center for Health Equity
NYC Department of Parks & Recreation
NYC Department of Sanitation
NYC School Construction Authority
NYC Department of Small Business Services
NYC Economic Development Corporation
NYC Food Policy Center
NYC Health and Hospitals Corporation
NYC Hispanic Chamber of Commerce
NYC Housing and Preservation Department
NYCHA
NYPD – 25th Precinct
NYPD – 23rd Precinct
NYPD – PSA 5
NYU
Open Sewer Atlas NYC
Park East High School
Partnership for Parks
Picture the Homeless
Placeful
Plumbers Local 1
Popular Community Bank
Pratt Center for Community Development
PRDream
Puerto Rican Institute for the Development of the Arts
Randall's Island Park Alliance
Regional Plan Association
Sanchez-Polanco
SCAN
Search and Care
SEIU 32BJ
Spanish Manhattan Church Youth Dept.
Office of City Council Speaker Melissa Mark-Viverito
STRIVE
Taller Boricua
Tenants & Neighbors
Tri-State Transportation
Union Settlement Association
Upper Manhattan Empowerment Zone
Urban Garden Center
Urban Homesteading Assistance Board
Urban Justice Center's Community Development Project
Washington Houses TA
WE ACT for Environmental Justice
Young Buck Sports
Youth Action YouthBuild

Technical Assistance Providers

Association for Neighborhood and Housing Development
Center for Urban Pedagogy
Community Development Project at the Urban Justice Center
Pratt Center for Community Development

D21
Hunter College
Kate Milford
George Janes Associates

KEY CONSULTING AGENCIES AND ORGANIZATIONS

ACS – NYC Administration of Children's Services
DCLA – NYC Department of Cultural Affairs
DCP – NYC Department of City Planning
DEP – NYC Department of Environmental Protection
DOB—NYC Department of Buildings
DOE – NYC Department of Education
DOT – NYC Department of Transportation
DPHO –District Public Health Office
DPR / NYC Parks – NYC Department of Parks & Recreation
DYCD – Department of Youth and Community Development
EDC – NYC Economic Development Corporation
HPD – NYC Department of Housing Preservation and Development
HRA – Human Resources Administration
NYCHA – NYC Housing Authority
NYPD – New York City Police Department
SBS – NYC Department of Small Business Services
SCA – NYC School Construction Authority

CONTENTS

3 FOREWORD
5 EXECUTIVE SUMMARY
10 INTRODUCTION
16 HISTORY

20 INTRODUCTORY COMMUNITY FORUM

22 COMMUNITY VISIONING WORKSHOP #1
24 Arts & Culture
32 Open Space & Recreation

40 COMMUNITY VISIONING WORKSHOP #2
42 Schools & Education
Pre-K, Daycare & Afterschool

52 COMMUNITY VISIONING WORKSHOP #3
54 NYCHA
62 Housing Preservation

70 COMMUNITY VISIONING WORKSHOP #4
72 Small Businesses, Workforce & Economic Development

80 COMMUNITY VISIONING WORKSHOP #5
82 Affordable Housing Development
90 Zoning & Land Use

102 COMMUNITY VISIONING WORKSHOP #6
104 Transportation, Environment & Energy
110 Safety
116 Health & Seniors

124 FINAL COMMUNITY FORUM

126 ENVIRONMENTAL IMPACT STATEMENT RECOMMENDATIONS
128 ACTION PLAN
134 APPENDICES

FOREWORD

The changing communities of New York City are frequently shaped by broad economic and social trends, which in turn impact local residents and small businesses who often struggle to remain. Forces of gentrification are negatively impacting our city and our communities, often leading to the displacement of existing residents, who are unable to reap the benefits of these changes. Mom-and-pop shops close because they can't afford increases in rent; the empty lot next door is suddenly developed into luxury housing; a school loses funding for an arts program; the supermarket that used to serve the community exits and a more expensive one enters. Communities must advocate for their own needs amidst changing environments. And we must do this together.

When East Harlem was announced as a neighborhood for a possible rezoning, with the goal of creating new affordable housing, we collectively sprang into action. The Office of City Council Speaker Melissa Mark-Viverito, Manhattan Community Board 11, Community Voices Heard and the Manhattan Borough President Gale A. Brewer came together to host an informational forum at El Museo del Barrio, to inform the community about the rezoning proposal and kick off a robust neighborhood planning process. We recognized that through engagement and organization, utilizing a community-driven process, we could develop a plan for the neighborhood's future that would place the needs of the community front and center.

The creation of the East Harlem Neighborhood Plan Steering Committee brought together and empowered local stakeholders to craft a plan that identifies broad community development goals and specific needs, all informed through rich community engagement. For the first time, a neighborhood has come together on its own initiative, prior to the Mayor's announcement of a neighborhood rezoning, to create a roadmap for future success that prioritizes the needs of existing residents, in addition to preparing for anticipated development and growth.

This Neighborhood Plan is the culmination of months of engagement, research, analysis, organizing, and consensus-building. Through the hard work and thoughtfulness of community residents and Steering Committee members, in partnership with several organizations and City agencies, we have created a comprehensive vision for our community, which should direct City policy and resources for years to come. We believe these goals and recommendations will advance the needs of East Harlem residents, and better prepare our community for the growth and changes that continue to shape neighborhoods throughout New York City.

Sincerely,
East Harlem Neighborhood Plan Project Partners:
Office of City Council Speaker Melissa Mark-Viverito
Manhattan Community Board 11
Community Voices Heard
Manhattan Borough President Gale A. Brewer

"The Second Conquest" mural by Ever at P.S. 109 (MonumentArt Festival) © Kate Milford 2016

The open kitchen of El Aguila Mexican restaurant © Kate Milford 2016

Hats sold on 116th Street with former Cosmo Theater in background © Kate Milford 2016

EXECUTIVE SUMMARY

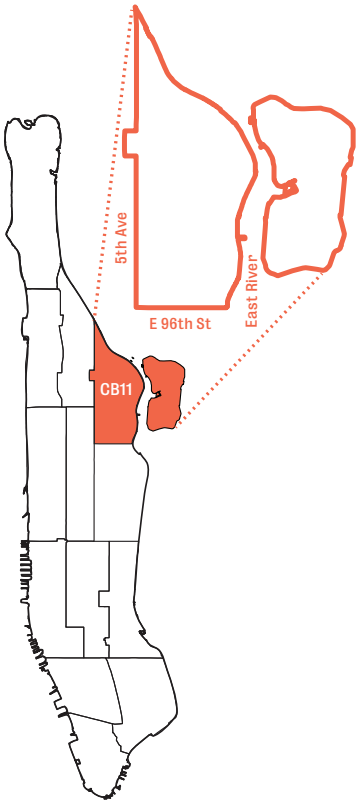

If nothing is done

282

projected affordable housing units will be lost per year over the next 15 years

The neighborhood of East Harlem has a rich cultural and social history. Tens of thousands of immigrants have made their first homes in the United States in East Harlem. First settled by Jews and Italians, later the center of New York City's Puerto Rican community, and in more recent years, home to Mexican, African and Chinese immigrants, East Harlem has an astonishing history of diversity. For a time in the mid-20th century, East Harlem was one of the most densely populated areas on the planet. As its crowded conditions came to the attention of social reformers, the neighborhood became the center of an enormous urban renewal effort that lasted two decades. The combination of public housing and other forms of regulated housing means that East Harlem is a neighborhood defined by its affordability as well as its diversity.

The increasing income inequality throughout New York City is, however, affecting East Harlem's continued affordability. There are approximately 12,000 households in the neighborhood facing severe housing needs based on the percentage of income paid to rent and mortgages, and parameters for overcrowding and homelessness. There is also a constricted supply of housing for families looking to grow and move, but that seek to remain in the neighborhood. Meanwhile, there is an ongoing loss of affordable units in East Harlem as rent-stabilization programs expire—on average over the last seven years, 360 homes have come out of rent stabilization programs each year.

The challenges around affordability extend to small businesses and non-profits that face rising rents. These businesses and non-profits underpin the fabric of the community and rising rents threaten the services that longtime residents are accustomed to. Just as importantly, there need to be opportunities to invest in people, including integrated early education programs and quality public schooling through post-secondary education and workforce development programs. We must ensure the implementation of a human capital development program that gives residents opportunities to invest in themselves. Any rezoning should support workforce training and infrastructure improvements that reinforce the community, such as new and improved facilities and open space, safer streets, better transit and a more culturally vibrant neighborhood.

When the City announced that East Harlem was to be one of the first neighborhoods to be rezoned as part of Mayor Bill de Blasio's Housing Plan to construct and preserve 200,000 units of affordable housing by 2025, it was clear to City Council Speaker Melissa Mark-Viverito, community organizations and residents that East Harlem needed a local plan—a plan rooted in local

ADDITIONAL CONCERNS IDENTIFIED BY NEIGHBORHOOD RESIDENTS

- Energy Independence & Resiliency
- Policing Alternatives
- Seniors Aging in Place
- Support for Local Artists
- Youth Empowerment
- Air Quality
- Protecting Cultural Heritage
- Quality Employment Opportunities
- Protection of Small Businesses
- Quality & Sufficient Public Open Space
- Healthy Food
- NYCHA Repairs & Security
- Affordable Goods & Services

concerns and local ideas and initiatives—before the City set out an approach to rezoning.

Speaker Mark-Viverito, based on her commitment to participatory governance and inclusive planning, convened a steering committee of local stakeholders to establish a process for a holistic community-based plan. Working with the Speaker's Office, project partners Manhattan Community Board 11, Community Voices Heard and Manhattan Borough President Gale A. Brewer took a leading role in fostering this process as we set out to accomplish the following goals:

- Collect and organize community concerns and ideas in order to influence City agencies' planning processes and rezoning efforts
- Create a human capital development plan that focuses on the advancement of East Harlem residents
- Develop approaches to preserve existing affordable and public housing and generate new, permanently affordable housing
- Develop new tools for preservation of culture, economy and neighborhood character
- Create a needs assessment that takes into account East Harlem's current and future community
- Develop implementable recommendations that reflect community input
- Provide a model for other communities and neighborhood planning efforts
- Build a base of engaged residents ready to advocate collectively for community needs

Through the guidance of a Steering Committee composed of representatives from community organizations, the East Harlem Neighborhood Plan has evolved through a series of eight large public meetings, which have averaged almost 180 people per session, approximately 40 meetings to develop the objectives and recommendations around the 12 key themes, several informal meetings to gather more feedback and to provide more information on the ideas being discussed, community-based surveys and online comments. The planning process has also included meetings with agencies to test and gather feedback on the objectives and recommendations.

The East Harlem Neighborhood Plan (EHNP) is structured in the following way:

- An Introduction to the East Harlem Neighborhood Plan;
- A historical overview of the East Harlem community;
- Chapters based around the Community Visioning Workshops, with sections detailing the strengths, challenges, and key objectives and recommendations tied to the 12 key themes;
- An Action Plan defining the approach to bringing about implementation of the objectives and recommendations and holding the City accountable to them;
- A glossary of terms and acronyms used in this report; and
- Appendices containing the East Harlem Neighborhood Plan Process Guide, additional supporting research, outlines and notes from the community workshops, and information and notes from various feedback sessions.

The following page highlights the priority objectives identified by East Harlem community members from among the total of 61 objectives developed by the 12 EHNP subgroups. Priorities were identified using a combination of online survey responses and voting via tokens at the Final Community Forum on January 27, 2016. The top two most voted objectives were selected per subgroup. These broadly suggest the critical places to focus attention on implementation, but not at the expense of a comprehensive understanding of how the 61 objectives and 232 recommendations presented in this report interrelate and are ultimately effective together.

As a result, following through on the myriad of recommendations in this Plan will require continued organization and input from within the East Harlem community as well as a need for responsiveness to this Plan on the part of the City. In many respects, the East Harlem Neighborhood Plan offers a new paradigm in neighborhood planning. Spurred on by both the City's decision to rezone East Harlem and the dramatic changes already underway, this Plan provides both an ambitious and realistic path forward for City agencies to act on. Since the objectives and recommendations are integrated, this Plan urges a similarly holistic response from the City.

There is a useful precedent to explore. Following Superstorm Sandy, the City responded by establishing the Mayor's Office of Recovery and Resiliency to coordinate interagency efforts to plan for the protection of New York City neighborhoods. While the impetus may be different than a disaster recovery effort, given the many challenges in East Harlem and impending change, the East Harlem Neighborhood Plan demands a coordinated implementation process that brings together local and City efforts.

PRIORITY OBJECTIVES

The priorities highlighted here were identified using a combination of online survey responses and voting via tokens at the Final Community Forum on January 27, 2016. The top two most voted Objectives were selected per subgroup.

The online survey was developed by D21, an online polling platform. The objectives poll had 60 respondents, 47 of whom identified as residents of East Harlem, and 16 of whom identified themselves as working in East Harlem. The majority of residents were from zipcodes 10035 and 10029.

Community members that attended the Final Community Forum were given a set of 15 tokens when they signed into the event. The tokens were used at subgroup stations for participants to identify their top 15 objectives. The tokens were color-coded by type of attendee—Resident, Worker, or Visitor. Each subgroup station had numbered jars for each objective. Participants were able to register their priority objectives by putting their tokens in the corresponding jar. A total of 2,792 tokens were cast at the event. 66% of the tokens came from residents, and 27% came from those who work in East Harlem.

Arts & Culture

- ✓ Preserve the unique cultural history of East Harlem.
- ✓ Support local artists and arts and culture organizations.

Open Space & Recreation

- ✓ Ensure public open space meets the needs of East Harlem residents now and in the future.
- ✓ Leverage public site development to create sufficient park space for East Harlem residents now and in the future.

Schools & Education

- ✓ Align specialized programs and services with the needs of East Harlem schools, and increase funding to support them.
- ✓ Create more diverse pathways to careers and college.

Pre-K, Daycare & Afterschool

- ✓ Ensure that programming is high quality, consistent, and well-funded.
- ✓ Improve existing pre-K, daycare and afterschool facilities, and ensure that quality spaces are created within new buildings.

NYCHA

- ✓ Ensure efficient, high quality repairs on NYCHA developments.
- ✓ Improve safety and security on NYCHA developments.

Housing Preservation	✓ Protect rent stabilized units. Prevent de-stabilization. ✓ Preserve vacant, underutilized and distressed properties for affordable housing development.
Small Businesses, Workforce & Economic Development	✓ Increase quality employment opportunities for East Harlem residents. ✓ Protect and enhance the viability of East Harlem's small businesses.
Affordable Housing Development	✓ Increase the amount of affordable housing with deep and varied levels of affordability in any new development. ✓ Expand affordable housing tools and resources to increase affordable housing in new development.
Zoning & Land Use	✓ Preserve important East Harlem buildings and reinforce neighborhood character. ✓ Allow for increased density in select places to create more affordable housing and spaces for jobs.
Transportation, Environment & Energy	✓ Improve East Harlem's energy resiliency and independence. Increase access to renewable energy. ✓ Improve East Harlem air quality—reduce congestion and mitigate vehicle emissions.
Safety	✓ Reduce violence and invest in youth empowerment in East Harlem. ✓ Ensure alternative approaches to quality of life issues, in addition to policing.
Health & Seniors	✓ Allow for East Harlem seniors to age in place. ✓ Improve access to healthy, affordable, quality food.

INTRODUCTION

Four initial neighborhoods prioritized for rezoning as part of the Housing New York plan.

Why Now?

East Harlem is one of the first four neighborhoods prioritized for rezoning, as part of Mayor de Blasio's Housing Plan to construct and preserve 200,000 units of affordable housing by 2025.

Rezoning a neighborhood, especially to create more housing, presents opportunities as well as major challenges. In response to existing concerns East Harlem residents have about changes in the neighborhood and how a potential rezoning could accelerate these changes, the Plan's Project Partners, New York City Council Speaker Melissa Mark-Viverito, along with Manhattan Community Board 11, Community Voices Heard, and Manhattan Borough President Gale A. Brewer, initiated a community-based planning process.

The East Harlem Neighborhood Plan sets a unique precedent for community input in rezonings. In East Harlem, community-defined needs and solutions have resulted in a neighborhood plan that precedes the conventional process of land use changes in New York City. Usually, public input is limited, narrow in scope, and comes after a plan has already been developed by government agencies. In contrast, the East Harlem Neighborhood Plan seeks to create a more holistic process based on community-defined needs prior to the City's rezoning study. This neighborhood plan will inform the City's zoning proposal and leverage resources to achieve broader neighborhood planning goals.

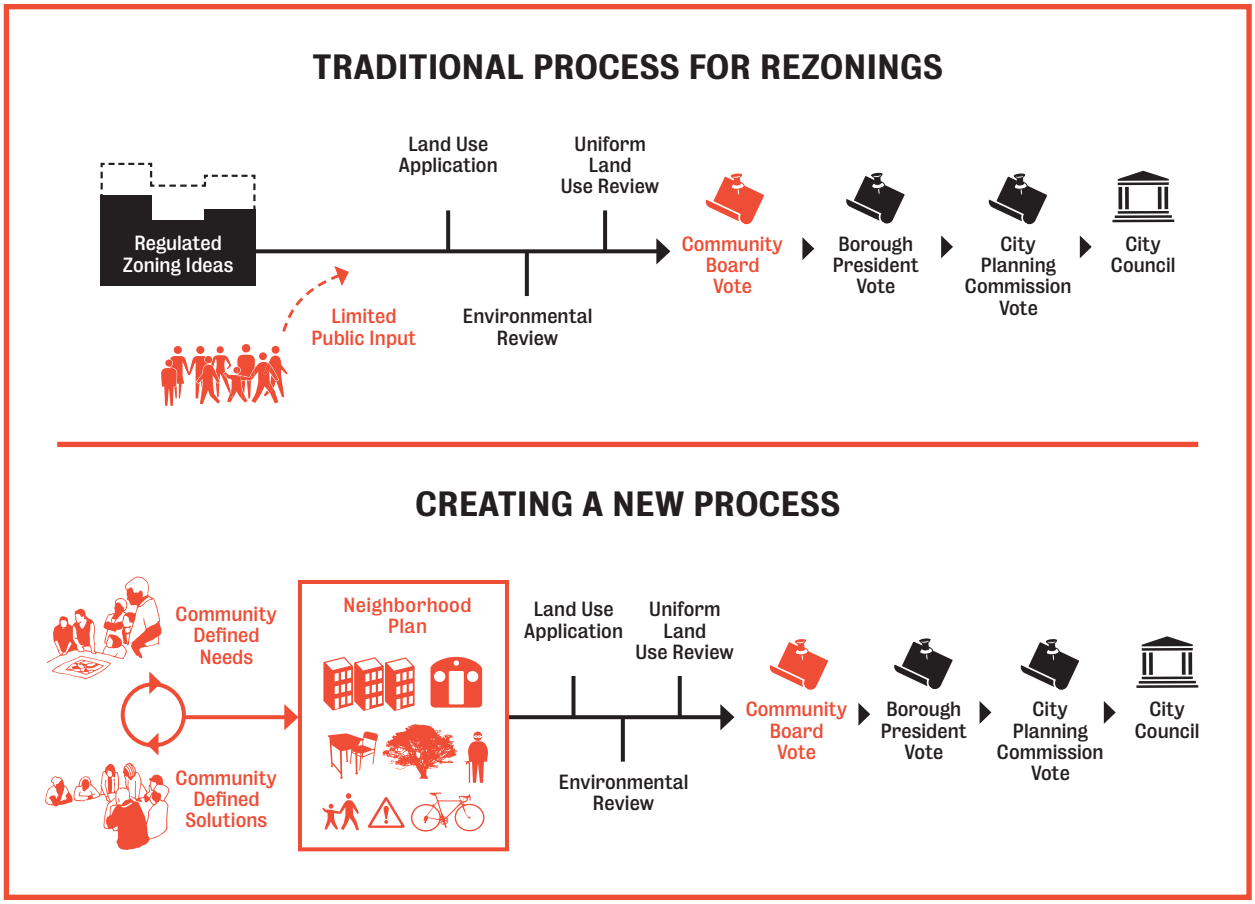

Goals

In order to provide the public and City with priority objectives and recommendations that represent the community, the Project Partners established a set of goals for the Neighborhood Plan:

1. Collect and organize community concerns and ideas in order to influence City agencies' planning processes and rezoning efforts.
2. Create a human capital development plan that focuses on the advancement of East Harlem residents.
3. Develop approaches to preserve existing affordable and public housing and generate new, permanently affordable housing.
4. Develop new tools for preservation of culture, economy and neighborhood character.
5. Create a needs assessment that takes into account East Harlem's current and future community.
6. Develop implementable recommendations that reflect community input.
7. Provide a model for other communities and neighborhood planning efforts.
8. Build a base of engaged residents ready to advocate collectively for community needs.

Community Visioning Workshop #5: Affordable Housing Development / Zoning & Land Use

COMMUNITY VISIONING WORKSHOPS

Introductory Community Forum	May 20 400 participants
Arts & Culture Open Space & Recreation	June 4 125 Participants
Schools & Education / Pre-K, Daycare & Afterschool	July 1 85 Participants
NYCHA / Housing Preservation	July 29 150 Participants
Small Businesses, Workforce & Economic Development	September 10 120 Participants
Affordable Housing Development / Zoning & Land Use	October 22 175 Participants
Transportation, Environment & Energy / Safety / Health & Seniors	November 21 83 Participants
Final Community Forum	January 27 350 Participants

SUBGROUP LEADS

Arts & Culture	El Museo del Barrio
Open Space & Recreation	New York Restoration Project
Schools & Education	Renaissance Charter High School for Innovation
Pre-K, Daycare & Afterschool	Harlem RBI
NYCHA	Johnson Houses Tenant Association
Housing Preservation	El Barrio's Operation Fight Back
Small Businesses, Workforce & Economic Development	Union Settlement Association
Affordable Housing Development	Lott Community Development Corporation
Zoning & Land Use	CIVITAS
Transportation, Environment & Energy	WE ACT for Environmental Justice
Safety	Office of City Council Speaker Melissa Mark-Viverito
Health & Seniors	New York Academy of Medicine

The Neighborhood Plan aims to express values and priorities as well as concrete recommendations. It balances community input with statistical background information and targets different ideas and concepts at particular entities and agencies with the ability and resources to fulfill them.

The plan includes a combination of short- and long-term programs, capital projects and policies that preserve the cultural diversity of East Harlem and support the ability for long-term residents to stay in the neighborhood and enjoy the benefits of neighborhood change.

The Planning Process

The Neighborhood Plan considers anticipated future growth in East Harlem and has utilized a broad community development framework to address the development of human capital and enhancements to quality of life. Recommendations were developed through the following process:

A. Input from community visioning workshops formed the basis of the recommendations

The planning process was underpinned by a large public kick-off event, six topic-specific community visioning workshops, and one large final community forum. In addition, Project Partners and Facilitators conducted varied informal engagement throughout the planning process. The six community visioning workshops were made public to all residents of East Harlem, and each one focused on a different topic or set of topics. The workshops were an opportunity for members of the community to share ideas, needs, dreams and concerns about East Harlem. Input from the workshops directly informed the work of the topic subgroup.

B. Topic subgroups developed objectives and recommendations

The topic subgroups were comprised of neighborhood leaders, local organizations, City agencies, and city-wide advocacy and technical assistance groups. Subgroups were responsible for integrating the findings of the community visioning workshops into a framework for developing objectives and recommendations. Because subgroup members were either based in East Harlem or do valuable work in the neighborhood, they brought meaningful expertise, perspective and shared resources to this process. Each subgroup was headed by an East Harlem Neighborhood Plan Steering Committee member.

The draft objectives and recommendations subject for approval were produced and reviewed following at least three subgroup meetings, a public visioning session, a meeting with relevant agencies and the deliberation of the subgroup leads.

C. The Steering Committee approved objectives and recommendations

The draft objectives and recommendations were presented to the Steering Committee for formal approval in the weeks following the community visioning workshops and subgroup meetings. The Steering Committee voted to approve proposed objectives and recommendations put forward by each subgroup.

16 out of the 21 Steering Committee members were required to approve a recommendation for it to move forward, and opposing members were allowed to note their objections to a recommendation in the report text.

Additional Engagement

In addition to public visioning sessions and informal engagement sessions, Community Voices Heard collected over 500 surveys between June and December 2015 from residents at visioning sessions, online, through door-to-door outreach, canvassing, and at various community spaces. Survey results can be found in the appendix of this report.

Throughout December 2015 and January 2016, CB11 hosted eight public presentations where subgroup recommendations were presented at corresponding CB11 subcommittees. The subcommittee chairs and members, as well as the general public, were given an opportunity to provide feedback. Subgroup leads have incorporated some of this feedback into their corresponding chapters. The appendix also includes a full list of recorded comments from the CB11 sessions.

In January 2016, the Project Partners collaborated with D21 (a digital voting platform) to create thirteen online polls, where the public was able to prioritize from among the 61 objectives and 232 recommendations put forward by the EHNP subgroups. There was a limited response rate on the subtopic-specific polls. The objectives poll had just over 60 respondents. A summary of that data is located in the appendix of this report. Community Voices Heard opened their office to the community for two evenings before the final community forum, giving the public another method of engaging with the recommendations. CVH publicized this through their network, and distributed 8,000 postcards advertising their open house.

To further inform residents about the plan, the Manhattan Borough President's Office (MBPO) held a session with five Faith Based Leaders on October 27. On November 2, DREAM Charter School held a workshop for 7th and 8th graders, which was attended by 142 students and 7 parents/guardians. Project Partners solicited community ideas at their offices and attended street fairs to spread the word about the planning process.

Finally, all relevant presentations, reports, research, announcements and photographs related to the EHNP were posted to www.EastHarlemPlan.nyc. The website will remain live and continue to act as a resource for the community during and after the City-led rezoning.

The EHNP process was conducted in a relatively compressed time period. The Steering Committee was given the opportunity to produce a community-driven plan in advance of DCP's study of the neighborhood. Along with this opportunity came the responsibility to be timely and responsive. As a result, a process that could have taken years was condensed to approximately 10 months.

While engagement was more robust than most similar processes, additional time and resources could have allowed even greater reach. Also, while all objectives and recommendations were translated to Spanish, and Spanish translation was available at all of the eight public meetings, more time and resources could have allowed more effective reach to Mandarin-speakers and monolingual Spanish speakers in the community.

East Harlem In Conversation

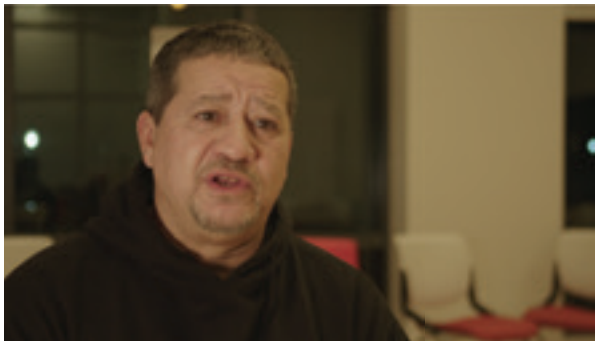

Ray Tirado
East Harlem Resident

"This is a community that's been around for a long time. I don't wanna move from here. I love it, I've lived here all my life, and hopefully I will retire in this community here and be a voice in my community."

Pearl Barkley
East Harlem Resident

"The neighborhood has gone through a lot in the past 50 years and now the fight is, 'if you want to come back in and develop, you have to do it for the people in the community first.'"

Beverly Pabon
East Harlem Resident

"We want to stay here, and we need affordable housing and small business to stay here."

Keith Massey
East Harlem Resident &
Community Board 11 Board Member

"A lot of us earn only under, maybe, thirty thousand dollars, so it's [the current Mandatory Inclusionary Housing proposal] not for us."

Photos courtesy of Meerkat Media Cooperative

HISTORY

East Harlem has historically been an important home for immigrants to New York City, with a rich cultural heritage and an enduring legacy of social justice activity. It has also been defined as a place undergoing constant change, known for its dynamic shifts in technologies, politics and physical fabric over the years. The creation of the elevated lines in the late 19th century, the rampant development of tenement housing that extended into the early decades of the 20th century and the urban renewal of the mid-20th century have all played critical roles in the transformation of the neighborhood. As the City begins to consider rezoning parts of East Harlem, it is important for the current community to have a voice in any upcoming change and to create mechanisms that allow for the continuity of what makes the neighborhood unique.

At the end of the 19th century, East Harlem was the best served neighborhood by inexpensive transportation in Manhattan. The extension of Third Avenue through northern Manhattan, the railroad along Fourth Avenue (later Park Avenue) and the Second Avenue Elevated ("El") all contributed to this distinction. Around this time, Italian immigrants were migrating to the neighborhood from the overpopulated Lower East Side, replacing Irish and German communities. Various Jewish educational institutions also thrived, some up through the 1950's.

1

The new transportation connections sparked real estate speculation and unbridled construction that would house working-class families for years to come. Over forty years, developers built approximately 65,000 apartments. Waves of immigrant communities displaced earlier settlers. Italian immigrants resided primarily east of Third Avenue and became the

2

largest such community in the country. Segments of East Harlem were deemed "Italian Harlem" and "Jewish Harlem."

East 116th Street evolved into a dense commercial corridor serving the neighborhood's multi-ethnic populations. Under the Park Avenue viaduct between 111th and 116th Streets, pushcart vendors congregated to sell goods. In 1936, Mayor Fiorello LaGuardia legitimized the activity and helped to create La Marqueta. It was only after World War II that East Harlem got the nickname Spanish Harlem. The continued arrival of newcomers from Puerto Rico, Cuba, the Dominican Republic, Panama, Mexico, and many other Latin American countries made El Barrio the predominant Spanish-speaking community in the United States outside of Puerto Rico. These communities and a growing African-American population replaced many Italians and Eastern Europeans, many of whom had begun to move out to suburban areas. Its residents included some of New York's most famous artists and musicians such as Tito Puente, Ray Barretto, Julia de Burgos, and Langston Hughes.

1 Puerto Rican Day Celebration, 1968 by John Albok, Courtesy El Museo del Barrio
2 Children in playground near elevated train tracks, Park Avenue, 1946 by John Albok Courtesy El Museo del Barrio

By the middle of the 20th century, East Harlem boasted 210,000 residents, almost twice today's population. The racially segregating practice of redlining led to deterioration of housing stock. These conditions made it a primary target for federal "slum clearance" and a model area for urban renewal. In the 1940s and 1950s, NYCHA demolished much of the older housing stock and replaced it with modern high-rise housing projects that complied with federal housing standards. The construction of these high rises amidst surrounding open space accelerated in the years after World War II, replacing large tracts of tenements, brownstones, community spaces and small businesses. By 1965, a quarter of East Harlem's residents were estimated to be living in public housing developments. The neighborhood was one of the hardest hit areas in the 1960s and 1970s as New York City struggled with deficits, race riots, urban flight, gang warfare, drug abuse, crime and poverty. Tenements were crowded, poorly maintained and frequent targets for arson.

3

This era spurred political movements among East Harlem's Latino and African-American communities, who joined together with clergy and settlement houses to protest the destruction of their neighborhoods. Parents demanded higher quality education for their children, including curriculum that was responsive to diverse cultural heritages. In 1969, community-based groups helped to decentralize the Board of Education and began participating in structuring school curricula and programming. The Young Lords— a social activist group— promoted neighborhood empowerment as part of wider national struggles for civil rights. Institutions like El Museo del Barrio also grew out of the activism of this time.

Recent years have been marked by continuing organization and advocacy, active community gardening groups, vibrant arts and dance groups, a focus on mini-schools and the emergence of several locally inspired charter schools. East Harlem continues to be a racially diverse neighborhood, with a 46% Latino/Hispanic and 30% African-American population. As it has been throughout its history, East Harlem continues to be a primarily working-class neighborhood.

Up until 2006 and following the national recession, property values in East Harlem rose along with those in the rest of New York City. There has been an increase in market rate housing construction, including luxury condos and co-ops. Although East Harlem continues to produce new rent stabilized units as well, it is losing older units from rent stabilization at a faster rate than it produces new ones. A comparison between 2000 and 2010 census data for East Harlem show that the African-American population of East Harlem has declined, while the number of white, Mexican and Asian residents (mostly Chinese) have grown significantly.

4

3 Labor Day Parade, 1968 by John Albok, Courtesy El Museo del Barrio
4 Spanish Harlem apartment buildings, 1978 by John Albok, Courtesy El Museo del Barrio
5 Shop display in Mexico Lindo on 116th St and 2nd Ave © Kate Milford 2016
6 Outside of East Harlem Cafe on 104th St and Lexington Ave © Kate Milford 2016

5

6

Sources:
New Directions: A 197-A Plan for Manhattan Community District 11 (revised 1999) http://www.east-harlem.com/cb11_197A_history.htm
El Museo del Barrio Timeline http://www.elmuseo.org/wp-content/uploads/2014/02/Timeline.pdf
http://www.nycteachingfellows.org/mypersonalinfo/downloads/M.HarlemHistory.pdf
http://www.arch.columbia.edu/les/gsapp/imceshared/East_Harlem_Studio_2011.pdf
Gill, Jonathan. Harlem: The Four Hundred Year History from Dutch Village to Capital of Black America. New York: Grove, 2011. Print.
http://www.nytimes.com/2013/02/25/nyregion/chinese-moving-to-east-harlem-some-from-chinatown.html
https://en.wikipedia.org/wiki/East_Harlem#Decline

INTRODUCTORY COMMUNITY FORUM

Community Education Forum / Kick-off Event

May 20th, 2015
6:30–8:30pm

at El Museo del Barrio

400 participants

The Community Education Forum was the kick-off event that served to inform residents about Housing New York, Mayor de Blasio administration's plan to preserve and develop 200,000 units of affordable housing over the next ten years and the impetus behind the proposed East Harlem rezoning. Participants also tackled rezoning—how a rezoning typically works and how the East Harlem neighborhood planning process was developed to create a community-based rezoning plan uniquely defined by the needs, desires and priorities of the East Harlem community. Participants learned about Neighborhood Planning & Rezoning Basics. Neighborhood residents and Community Voices Heard (CVH) members performed a skit that modeled different perspectives within a planning process, highlighting opportunities and tensions in a conversation about neighborhood change. Audience members commented on their passions, dreams and concerns during a question and answer session. And, finally, Project Partners and Steering Committee members gave an overview of the various subgroup topics and next steps for each.

COMMUNITY VISIONING WORKSHOP #1

Arts & Culture / Open Space & Recreation

June 4th, 2015
6:30–8:30pm

at Hunter College
Silberman School of
Social Work

125 Participants

"I value the long-standing culture, the art murals, La Marqueta, cafes, community gardens, the history and the people, the heart of NYC."

"What makes East Harlem special for me is the multicultural community. I value the richness of the culture in our community."

From EHNP survey respondents

The first community visioning workshop focused on Open Space & Recreation and Arts & Culture and was led by New York Restoration Project and El Museo del Barrio. Participants identified strengths and challenges for each topic during the small group discussion. For Open Space & Recreation, participants discussed park utilization, recreational needs, increasing density and the related impact on open space, resiliency and park system connectivity. For Arts & Culture, participants had conversations about arts programming relevant to the East Harlem community and resource and space needs for local artists and arts organizations.

Arts & Culture

East Harlem has a rich cultural history, drawing from its legacy as a neighborhood of immigrants and as a home to many well-known artists. The area was the first major Latino immigrant neighborhood in the city, was once the center of the Italian-American community, and has housed thriving Jewish and African-American communities. This legacy is not just historical; today many people refer to the area as "El Barrio," and there are new waves of Chinese and Mexican immigrants arriving.

1

2

3

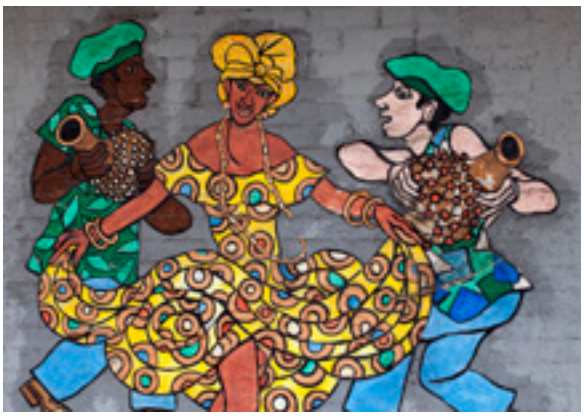

4

5

6

East Harlem, well-known for its contributions to music, such as salsa, Latin jazz, mambo and hip-hop, and its iconic murals, is full of arts and cultural institutions that provide stability and longevity to the cultural ecosystem of the neighborhood. These organizations operate at many different scales and meet many different needs. Another resource is the stock of the architecturally and culturally significant buildings that reflect the neighborhood's unique history and are important to residents.

1 Salsa dancing at La Marqueta
© John McCarten / New York City Council
2 Nicholasa Mohr mural by El Mac and Cero,
111th St and Lexington Ave (MonumentArt Festival)
© William Alatriste/New York City Council
3 "Spanish Harlem: The Spell of Music," John Albok
1970 or 1978, Courtesy El Museo del Barrio
4 Mural by Manny Vega on 106th St, east of Lexington Ave
© Kate Milford 2016
5 Women with paintings in an outdoor exhibit by John Albok,
Courtesy El Museo del Barrio
6 Museum of the City of New York © Kate Milford 2016

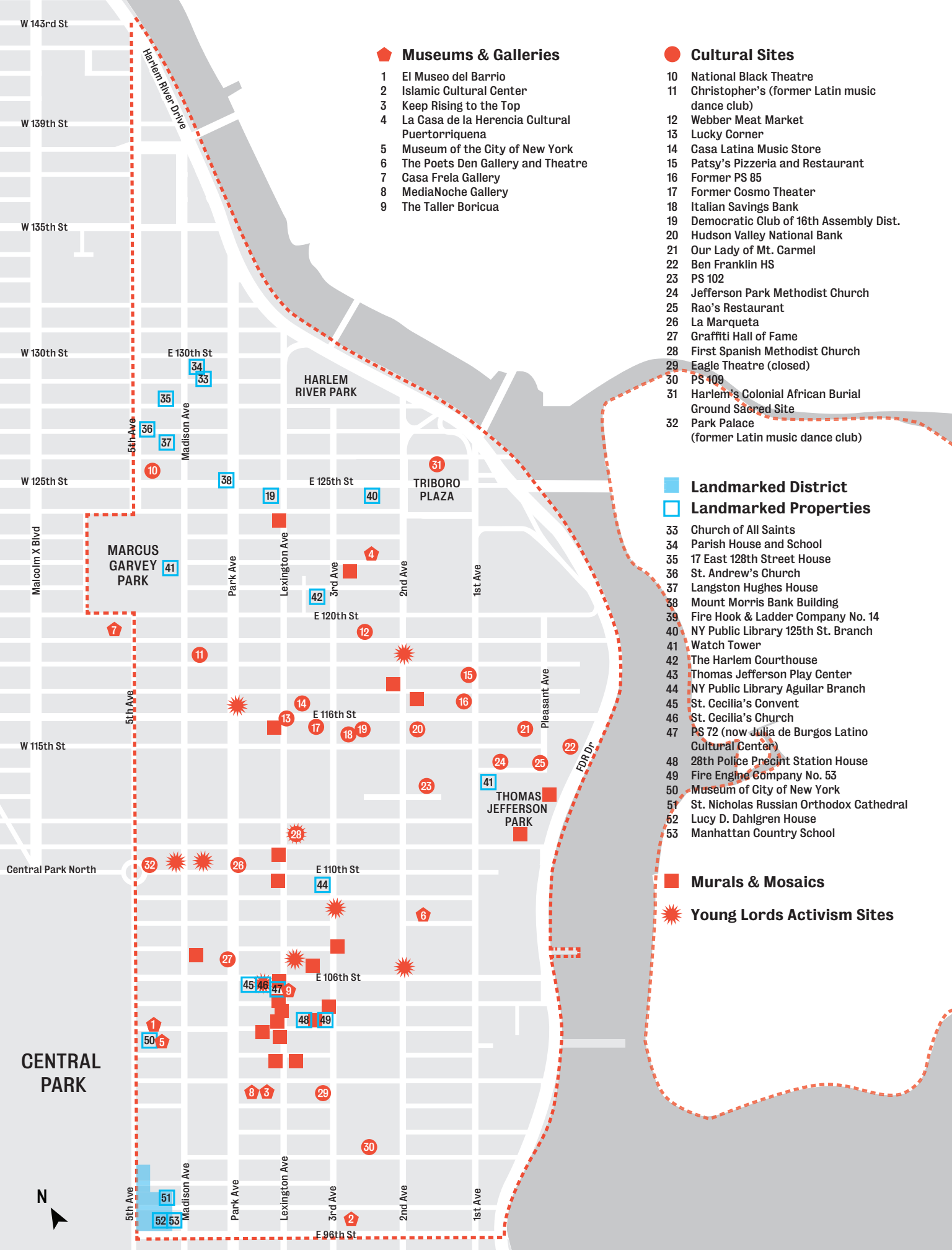

Museums & Galleries

1 El Museo del Barrio
2 Islamic Cultural Center
3 Keep Rising to the Top
4 La Casa de la Herencia Cultural Puertorriquena
5 Museum of the City of New York
6 The Poets Den Gallery and Theatre
7 Casa Frela Gallery
8 MediaNoche Gallery
9 The Taller Boricua

Cultural Sites

10 National Black Theatre
11 Christopher's (former Latin music dance club)
12 Webber Meat Market
13 Lucky Corner
14 Casa Latina Music Store
15 Patsy's Pizzeria and Restaurant
16 Former PS 85
17 Former Cosmo Theater
18 Italian Savings Bank
19 Democratic Club of 16th Assembly Dist.
20 Hudson Valley National Bank
21 Our Lady of Mt. Carmel
22 Ben Franklin HS
23 PS 102
24 Jefferson Park Methodist Church
25 Rao's Restaurant
26 La Marqueta
27 Graffiti Hall of Fame
28 First Spanish Methodist Church
29 Eagle Theatre (closed)
30 PS 109
31 Harlem's Colonial African Burial Ground Sacred Site
32 Park Palace (former Latin music dance club)

Landmarked District

Landmarked Properties

33 Church of All Saints
34 Parish House and School
35 17 East 128th Street House
36 St. Andrew's Church
37 Langston Hughes House
38 Mount Morris Bank Building
39 Fire Hook & Ladder Company No. 14
40 NY Public Library 125th St. Branch
41 Watch Tower
42 The Harlem Courthouse
43 Thomas Jefferson Play Center
44 NY Public Library Aguilar Branch
45 St. Cecilia's Convent
46 St. Cecilia's Church
47 PS 72 (now Julia de Burgos Latino Cultural Center)
48 28th Police Precint Station House
49 Fire Engine Company No. 53
50 Museum of City of New York
51 St. Nicholas Russian Orthodox Cathedral
52 Lucy D. Dahlgren House
53 Manhattan Country School

Murals & Mosaics

Young Lords Activism Sites

While the artistic and cultural resources of the neighborhood are considerable, there are challenges for the neighborhood to retain them as it grows and changes. However, preserving these assets in East Harlem is a priority for the community.

- Local artists and arts and culture organizations struggle to identify sufficient financial resources and support services. These groups lack an overarching coalition that could advocate for space, sources of funding, and other forms of support. Without these resources, it is difficult to sustain the arts and cultural network.

- Artists and arts organizations struggle to find affordable places to live, create and display their work. As development pressures rise, spaces that were previously affordable to arts and cultural activities are increasingly out of reach. Without focused strategies to support artists and cultural activities, these affordability challenges will only intensify.

- Many buildings in the neighborhood that capture the unique historical and cultural significance of East Harlem are threatened by new development and physical change. Residents risk losing representations of their heritage as the neighborhood gentrifies. As changes to the built environment occur, it will be important to pursue strategies that help to reinforce the character of the community.

- Both within the community and city-wide, there is a lack of familiarity with the cultural resources and artistic production taking place in East Harlem. Without such an understanding, the historic and cultural resources of the neighborhood are more vulnerable to threats, and opportunities to attract visitors to the neighborhood may be lost.

To protect and promote the rich arts and cultural resources of East Harlem, the neighborhood plan has six objectives (see the following page).

Museums & Galleries
A partial list of key existing museums and galleries in East Harlem.

Cultural Sites
A combination of architecturally, socially and/or historically signicant buildings in East Harlem. These locations are not formally landmarked, but were raised as valuable to the cultural fabric of the neighborhood during outreach and research. Some of these locations were identied using Columbia University's Graduate School of Architecture, Planning and Preservation Historic Preservation Studio II: Spring 2011 report.

Young Lords Activism Sites
The Young Lords—a Puerto Rican nationalist group with a focus on social justice—promoted neighborhood empowerment as part of wider national struggles for civil rights. This map calls out various sites where the Young Lords organized, ranging from their headquarters, to the locations of their Garbage Offensive (where they accumulated garbage at the center of Second and Third Avenues to get the attention of the Department of Sanitation), to their takeover of the First Spanish Methodist Church of East Harlem (later renamed by the Young Lords as The People's Church), to the rerouting of a TB-testing truck.

Landmarked District & Landmarked Properties
All formal landmarked districts and properties in East Harlem as per the NYC Landmarks Preservation Commission (LPC).

Murals & Mosaics
As an historically and culturally signicant neighborhood, East Harlem is home to a rich collection of public art and murals, reections of thriving artistic talent, cultural investment and the true and diverse spirit of El Barrio. The mural locations on this map are not comprehensive. You can visit www.visitelbarrio.com/arts-culture/public-art-murals for more information.

OBJECTIVES & RECOMMENDATIONS

1.

Ensure that financial resources and support services are available to sustain local arts and culture organizations and local artists.

1.1
Work closely with the Department of Cultural Affairs (DCLA) to create a central arts advocacy entity to serve as a resource for East Harlem arts and culture organizations and individuals. This entity will serve as an arts and culture coalition, and should share common goals and objectives. Include a diversity of coalition partners including Local Development Corporations, local business leadership and non-arts oriented community institutions and organizations. ●●

1.2
Study the feasibility of and funding needs to expand the use of existing underutilized and non-traditional spaces in East Harlem for community arts and cultural programs.

Reach out to organizations where this underutilized space exists, i.e. Heckscher Theater at El Museo, Theater at Poets Den, Red Roof Theater. Discuss providing these spaces to dancers and artists for a nominal fee when not in use.

●● Related to precedent on page 30

2.

Create affordable artist housing, as well as new spaces for community organizations and programming.*

2.1
Give first priority usage of artists spaces in newly developed and existing spaces to local artists living within or who have a history of working within CB11.

2.2
Create a new dance hall and movie theater. Engage with theater companies that may be interested in opening a new location in East Harlem.

* A joint recommendation for increasing affordable artist live/work spaces in East Harlem is located in the Affordable Housing Development chapter, Recommendation 2.4.

3.

Expand opportunities for local artists to produce commissioned work in East Harlem.

3.1
Advocate for the Percent for Art program in private projects.

3.2
Advocate for more use of local artists in the Percent for Art program.

4.

Preserve the unique cultural history of East Harlem by harnessing historic landmarks and representing El Barrio's narrative through the public realm.

4.1
Establish a process to identify culturally significant structures in East Harlem and a method to preserve and celebrate them. Establish a landmarking process that does not impede the development of affordable housing. Some key locations are identified on the map on page 26. ●●

4.2
Develop a unified signage and multimedia program for East Harlem, branding it as a key destination in the city. Establish a cultural wayfinding walk or El Barrio hall of fame that pays homage to the past and present artistic and historic influences of the neighborhood. ●●

5.

Create greater awareness both internally and externally of the cultural production currently taking place in all of East Harlem.

5.1
Host a comprehensive community events calendar that advertises all arts and cultural programming in East Harlem. Utilize an outdoor kiosk bulletin board to promote programming and events. ●●

5.2
Work more closely with the following organizations and initiatives to streamline promotion of East Harlem arts and cultural programs: East Harlem Community Alliance, Visit El Barrio, NYC & Co. ●●

6.

Develop arts programming that meets the needs of the local community while also attracting visitors to East Harlem.

6.1
Create an East Harlem Theater District for off-Broadway performances. ●●

6.2
Continue to expand East Harlem arts and culture into existing programming at NYC Parks, DOE, NYCHA, small businesses and other cultural institutions (ex—film screenings, open mics, music festivals, poetry readings). ●●

6.3
Identify resources to further support increased arts and cultural programming at the La Marqueta site and leverage East Harlem cultural festivals and large events to increase tourism (ex. ethnic pride events, food festivals and fairs, coordinated late/free nights at local museums, establishment of an East Harlem Latin Jazz Festival connected to programming at the National Jazz Museum in Harlem). ●●

ARTS & CULTURE

PRECEDENTS

The Hill by Daniel

Cultural activation in the Modesto "Tin" Flores Garden, part of El Barrio Week programming
Courtesy of El Museo del Barrio

Naturally Occurring Cultural Districts – New York

Naturally Occurring Cultural Districts – New York (NOCD-NY) emerged from a series of roundtable conversations between 2010 and 2011, when artists, activists, creative manufacturers, non-profit groups and policy-makers convened to discuss the role that arts and culture play in strengthening New York City communities. By late summer 2011, NOCD-NY grew into a working alliance, generating a sustained commitment and city-wide platform for revitalizing New York City from the neighborhood up. It is tasked with advocating for policies, promoting the value of local practice, collaborating on programs and compiling research on the work of the cultural community.

This precedent relates to Recommendation 1.1
Source: http://nocdny.org

South Bronx Cultural Corridor

In 2001 the Bronx Council on the Arts (BCA) designated a mile-long strip of the Grand Concourse as an area with a high concentration of cultural activity and branded it the South Bronx Cultural Corridor. It has been dubbed the "Gateway to the New Bronx" and demonstrates arts-based economic development in the South Bronx. BCA's goals for the corridor are to attract visitors, increase commercial activity and engage the community in a variety of South Bronx cultural events.

This precedent relates to objectives 4, 5 and 6
Source: http://www.bronxarts.org/southbronxculturalcorridor.asp

ARTS & CULTURE

7

7 Yarn bombing public art project by Naomi/Random Acts of Generosity, with Hope Community Inc. on 104th St in background © Kate Milford, 2016
8 Casa Latina Music Shop © Kate Milford, 2016
9 Adrian Roman aka Viajero's Libre Mural (MonumentArt Festival) © Kate Milford, 2016

8

9

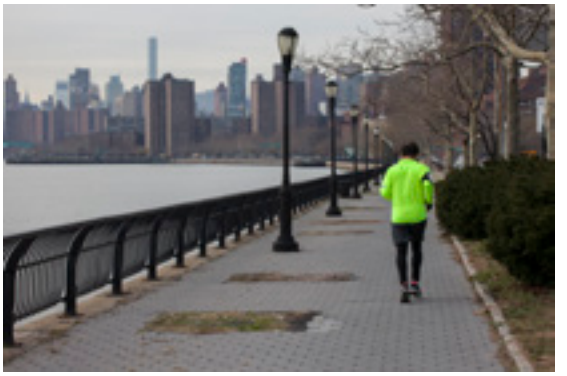

1

Open Space & Recreation

2

3

1 East River Esplanade © Kate Milford 2016
2 Thomas Jefferson Park © Kate Milford 2016
3 103rd Street Community Garden © John McCarten / New York City Council
4 El Barrio's Artspace PS109 © Kate Milford 2016
5 National Night Out East Harlem © John McCarten / New York City Council

The open space geography of East Harlem is unique among many New York City neighborhoods. While the edges of the neighborhood are flanked by two important city-wide parks, Central Park and Randall's Island, and two neighborhood parks, Marcus Garvey Park and Thomas Jefferson Park, the center of East Harlem is dotted with playgrounds and community gardens that reflect the neighborhood's history and cultural heritage. East Harlem also has access to an active waterfront with the potential to become a world-class destination for local residents and the city at large. The renovation and maintenance of open space in East Harlem is supported by the NYC Department of Parks & Recreation, private conservancies, land trusts, 'friends of' groups, non-profits and other City agencies.

4

5

EXISTING OPEN SPACE
Dept of Parks & Rec Public Open Spaces
Land and Garden Trust
Privately-owned Open Space
City-owned Open Space
NYCHA Developments
DOE Playgrounds
Community Gardens
ESPLANADE CONDITION
Satisfactory
Fair
Serious
No Condition Rating
No Esplanade Exists
Condition ratings from OMB-DPR Marine Report, June 2013
W 143rd St
W 139th St
W 135th St
W 130th St
E 130th St
W 125th St
E 125th St
E 120th St
E 116th St
W 115th St
E 110th St
E 106th St
E 96th St
Central Park North
Harlem River Drive
HARLEM RIVER PARK
TRIBORO PLAZA
MARCUS GARVEY PARK
RANDALL'S ISLAND
THOMAS JEFFERSON PARK
CENTRAL PARK
FDR Dr
Pleasant Ave
Malcolm X Blvd
5th Ave
Madison Ave
Park Ave
Lexington Ave
3rd Ave
2nd Ave
1st Ave
N

Despite these considerable open space assets, there are also challenges, which will be exacerbated as the neighborhood continues to grow. Recognizing and responding to these challenges will improve the quality of life for current and future residents. The findings from the community visioning workshop and open space subgroup meetings focused on the following challenges:

- On a basic level, the amount of open space in East Harlem is insufficient. While New York City has a standard of 1.5 acres of open space per 1,000 residents, New Yorkers for Parks has set a higher goal of 2.5 and has found that there are 2.9 acres of open space per 1,000 residents city-wide. Without Randall's Island or Central Park, East Harlem falls well below this benchmark with only 0.77 acres of open space per 1,000 residents. If the northeast corner of Central Park is included, the number climbs to 1.45 acres per 1,000 residents.

- Numerous community gardens are threatened and under-resourced, and in some cases are not open or programmed for wider public use. Loss of these open spaces is a threat to the community.

- With so much of the open space located at the neighborhood's edges, it is critical to overcome the physical and psychological barriers to using these parks. In the case of Randall's Island, Harlem River Park and the waterfront esplanade, there is a need to create better access to recreational spaces. Programs and improved lighting can also make Central Park feel more connected to East Harlem residents.

- East Harlem is vulnerable to climate change and extreme weather events, with inundation during Superstorm Sandy affecting many residents. Open space design needs to incorporate resiliency while also ensuring that public access is improved, not curtailed by storm surge protections.

- Many parks in East Harlem need better maintenance and staffing. In the community visioning workshop, many open spaces were identified as assets with the caveat that they needed better maintenance in order to maximize their value and meet the needs of residents.

OBJECTIVES & RECOMMENDATIONS

1.

Ensure public open space meets the needs of existing residents and keeps pace with an increasing population.

1.1
Strategically preserve and create open space that strives for 2.5 acres/1,000 residents for existing and future East Harlem residents.

1.2*
As density increases, ensure that open space is created with new developments as part of a zoning special district. Work with developers to create a Community Benefits Agreement (CBA) that funds a program to train and hire East Harlem residents for maintenance and stewardship of these open spaces. ●●

*This recommendation relates to the Garden District proposal in Recommendation 3.5 in the Zoning & Land Use chapter.

1.3
Work constructively with City agencies and private land managers including conservancies, land trusts, 'friends of' groups, and non-profits to ensure open space maintenance and staffing in parks and community gardens is proportional to the number of people using the space, especially during peak season. Increase staffing during the summer season.

1.4
Conduct a needs assessment for comfort stations, recreation centers, and ballfields in East Harlem.

1.5
Build a comfort station at Harlem River Park.

●● Related to precedent on pages 38-39

2.

Leverage City-owned sites and public affordable housing development resources to create enough park space to accommodate existing and future East Harlem residents.

2.1
Seek opportunities on City-owned land for open space creation. With increased density comes the likelihood that land values will rise, leaving agencies unable to afford private property for new parkland.

2.2
Conduct a feasibility study of the potential for ferry access along entire East River waterfront, with Pier 107 as a potential access point.

2.3
Restore Pier 107 as a public open space. ●●

2.4
Conduct a study of where streetends can be developed to add more open space to the East Harlem community. Areas of consideration can include 117th, 118th and 119th Streets and the small streets around Thomas Jefferson Park. Pilot the SummerStreets program at these locations to test the street closure in a temporary way.

2.5
Open more school playgrounds during off-hours for community recreation, and explore opportunities to incorporate stormwater management infrastructure in playground renovations. ●●

2.6
Leverage city and private sector programs and resources to support open space development: Neighborhood Plaza Program, GreenThumb Garden Coalitions initiative.

3.

Integrate stormwater management strategies through open space design to better prepare East Harlem for threats from climate change.

3.1
Require developers to manage 1" of storm-water runoff from all impervious surface area on their site.

3.2
Ensure all Combined Sewer Overflow (CSO) Tributary Areas that overlap with the boundaries of CB11 become Priority CSO Tributary Areas for DEP in FY17.

3.3
As part of a Priority CSO Tributary Area, DEP should identify and study existing underground streambeds along East Harlem streets and through large properties working with other agencies like NYCHA to prioritize green infrastructure at these locations.

3.4
Take a comprehensive planning approach to waterfront resiliency, incorporating prior and ongoing planning efforts to create green/natural buffers along the water's edge in East Harlem and achieve overlapping benefits to the public from flood and storm surge protection.

4.

Remove cultural and psychological barriers to using parks.

4.1
Create new and leverage existing funds and partnerships to expand open space programing in East Harlem.

4.2
Improve outreach and communications for park programming by developing an inventory, shared calendar, and outreach strategy for East Harlem programs and permitting.

5.

Remove physical barriers to parks and open space throughout East Harlem.

5.1
Provide increased lighting and tree pruning around light sources throughout East Harlem public open spaces, prioritizing spaces along the Park Ave. viaduct (particularly 111th Street), Marcus Garvey Park, and NYCHA developments. Lighting options should include LED, solar and pavement.

5.2
Make sidewalks, parks, and other open spaces ADA compliant and convenient for seniors and caregivers with young children. Prioritize Park Ave. viaduct, Harlem River Park, 96th Street and FDR, and Marcus Garvey Park.

5.3
Improve neighborhood wayfinding and create unified open space signage that includes parks, GreenThumb gardens and NYCHA properties.

5.4
Improve the structural conditions of the East River Esplanade.

5.5
Improve accessibility to existing connections to Randall's Island, and study additional ways to improve access (footbridges, bus routes, ferry service).

OPEN SPACE & RECREATION

PRECEDENTS

Schoolyard to Playground at IS 226 in Brooklyn
Courtesy of NYC Parks

Schoolyards to Playgrounds

While there are hundreds of Jointly Operated Playgrounds (JOPs) across the city, the vast majority of schoolyards are not used for play after school hours. In 2007, PlaNYC identified hundreds of schoolyards across the city that could be opened or renovated for after-hours use, via the Schoolyards to Playgrounds program. The NYC Department of Parks & Recreation works with the Department of Education and the nonprofit Trust for Public Land to improve many of the schoolyards through capital improvements, including play equipment, painted sports surfaces, trees, and benches.

This precedent relates to Recommendation 2.5
Source: nycgovparks.org/greening/planyc/schoolyards

Battery Park City
Courtesy of Battery Park City Authority

Park Improvement District

"Park improvement districts" are patterned after business improvement districts, with the power to impose a real estate transfer tax to generate revenue to support specific parks, especially signature parks. The Maryland State Parks system is supported by a 0.5% real estate transactions tax, while Battery Park City parks are supported by rental revenue, and this support favorably impacts rental rates. The Chicago Loop Tax Increment Financing District was enlarged to incorporate and fund Millennium Park.

This precedent relates to Recommendation 1.2
Source: ny4p.org/research/other-reports/or-altrevenue10.pdf

Existing roof at Pier 107
Anton Brookes, Courtesy of CIVITAS

Pier 107 Restoration

This project includes the partial demolition of the unsafe above-grade concrete structure atop the pier, the selective repair of existing handrails and surfaces, and the installation of easily-removable and lightweight shade structures, benches and other elements.

DPR has met with stakeholders to determine the scope of work for the project. They are now developing the design for the site.

This precedent relates to Recommendation 2.3
Source: nycgovparks.org/planning-and-building/capital-project-tracker/project/7211

West Harlem Piers
Jim Henderson

West Harlem Piers

In 1998, WE ACT for Environmental Justice partnered with Manhattan Community Board 9 to organize the Harlem-on-the-River Project. Their goal was to develop a community-driven plan that would both increase access to the Harlem waterfront and raise interest in one of Northern Manhattan's neglected neighborhoods. Working with over 200 residents, elected officials and representatives from the NYC Parks Department, WE ACT submitted a community vision plan for the waterfront to the NYC Economic Development Corporation in 1999. As a result, EDC scrapped its requests for proposals for commercial development at the site and developed a master plan based on the Harlem-on-the-River community plan. On May 30, 2009 the park was officially opened as the West Harlem Piers Park.

This precedent relates to Recommendation 2.3
Source: http://www.weact.org/west-harlem-waterfront-park

OPEN SPACE & RECREATION

COMMUNITY VISIONING WORKSHOP #2

Schools & Education / Pre-K, Daycare & Afterschool

July 1st, 2015
6:30–8:30pm

at Hunter College Silberman School of Social Work

85 Participants

Additional Youth and Family Engagement:

November 2nd, 2015
Dream Charter School
7th and 8th graders workshop
142 students
7 parents/guardians

The second Community Visioning Workshop focused on Pre-K, Daycare and Afterschool (led by Harlem RBI), and Schools & Education (led by Renaissance High School for Innovation). Participants had a chance to discuss both youth programs and the state of schools and education in the small group portion of the session. They were first asked to identify strengths and challenges for each topic. For youth programs, participants had more in depth conversations focused on the condition of facilities, leveraging the rich network of community-based organizations, what services are most important, and what programs are missing from the neighborhood. For Schools & Education, participants discussed how to create more diverse pathways to careers and college, how to align services and programs with student need, integrating technology into schools and what types of partnerships are needed in schools.

"I am concerned with the amount of violence, gangs and having more productive programs for young teens, increasing mentoring programs and finding jobs for those that come out of jail."

From EHNP survey respondents

Additionally, Dream Charter School hosted a workshop with 142 of their 7th and 8th grade students and some of their parents/guardians. Participants talked more generally about what makes East Harlem special, what they think is missing from the neighborhood and brainstormed ideas about how to improve the neighborhood.

Schools & Education

Youth—0-24 year olds—make up 33 percent of East Harlem's population, and the opportunities provided through schools, daycare and afterschool programs in East Harlem are of fundamental importance to their lives. East Harlem, which is in DOE's District 4 and a small portion of District 5, has many young people who need activities and engagement that extend beyond a standard K-12 education curriculum. School-based mentorship, along with career and college support, provides an opportunity for students to think about and prepare for the future. East Harlem has a number of organizations, including cultural and service groups, which help bridge school-life with these types of support structures in the broader community.

1

1 PS 83 © Luis Munoz Rivera
2 Harlem RBI / Dream Charter School © Paúl Rivera, Courtesy Perkins Eastman / Sarah Mechling-Perkins Eastman
3 Our Lady Queen of Angels School, 229 E 112th St © Kate Milford 2016
4 Pre-school program, Courtesy of Boys & Girls Harbor

2

3

East Harlem also has a variety of long-standing programs that meet a variety of needs for pre-K, daycare and afterschool, often offered in multiple languages, and through partnerships with local cultural institutions and community organizations. These are all important to young people's education and development. Based on research by organizations such as the Center for Public Education, children who participate in pre-K and afterschool programs are more likely to be successful, both inside and outside of school.

4

Pre-K, Daycare & Afterschool

While there are many successful programs in East Harlem that provide valuable services, the community visioning workshop and subgroup meetings identified a number of areas that could be improved to better serve East Harlem's youth today and in the future:

- DOE's efforts to broaden and diversify school curriculum should to be further encouraged, including expanding the focus on STEM (science, technology, engineering, and mathematics) and including more arts, music, culture, local history, special education programs, financial education and vocational training with exposure to career options.

- Specialized services and programs that schools do offer may be resource-limited or misaligned with specific local needs. Students needing this specialized support suffer from these limitations. On a broader level, students often need more support for college and career pathways. Challenges in education have a significant effect on outcomes; only 18 percent of East Harlem students graduated college-ready in 2011.

- School facilities face significant capital and capacity limitations, which can lead to overcrowding and increased competition between schools for resources. DOE and SCA continue to make important upgrades and advancements to facilities in the district, but more remains to be done. Some pre-K, daycare and afterschool program facilities need repairs, while others lack access to a diversity of spaces for different types of activities. Common needs include access to outdoor and recreational spaces, and more spaces for flexible uses like music, art and libraries.

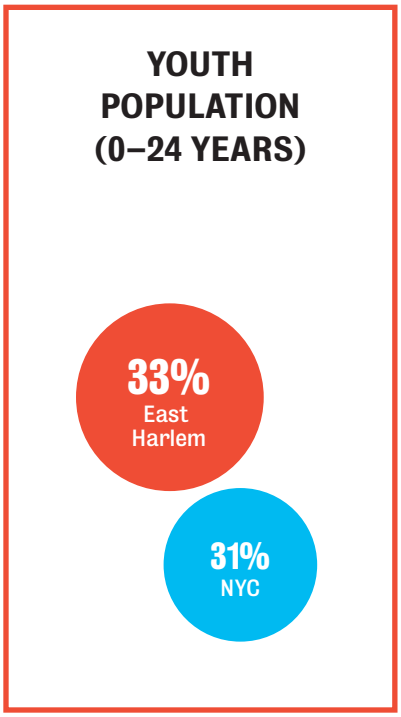

Source: NYC Community Health Proles 2015

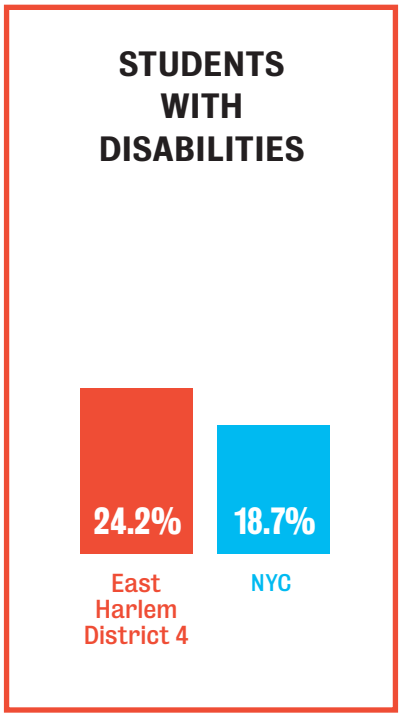

Source: New York State District Level Data by Grade 2014-15

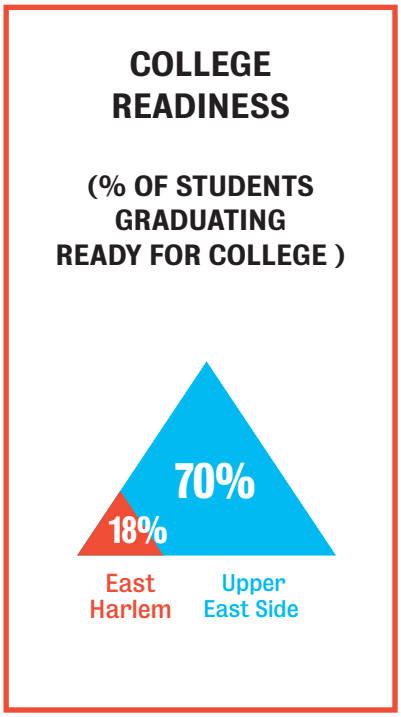

Source: NYC Coalition for Educational Justice (class of 2011 college readiness rates by zipcode)

- Outside of school, there are difficulties to ensuring that students receive the best education that they can. Disconnects between family life and school can undermine education and attainment. Not all families feel engaged in their children's education due to factors like lack of outreach, family education attainment, and language barriers. Given those barriers, parents often miss out on information about what's happening for their children in school, and as a consequence, time at home does not supplement what students are learning at school as much as it could.

- There is a need for center-based programming for infants and children from 0-3 years old, as well as improved coordination between childcare and pre-K programs.

- Pre-K, daycare and afterschool programs can increase their impact by more effectively partnering with existing community-based organizations. These partnerships can provide a greater breadth of programs and strengthen the neighborhood network.

- Pre-K, daycare and afterschool programs also have gaps in their services. The hours of the facilities sometimes do not reflect the needs of those who use them, and there is a need for more programs to serve families with infants and toddlers.

EDUCATIONAL ATTAINMENT OF POPULATION 25 AND OVER

	Less than High School Degree	HS graduate or Associate's	Bachelor's	Graduate or Professional Degree
East Harlem	28%	44%	17%	12%
Manhattan	20%	46%	20%	14%
NYC	14%	28%	31%	28%

Source: 2010 Census PUMA

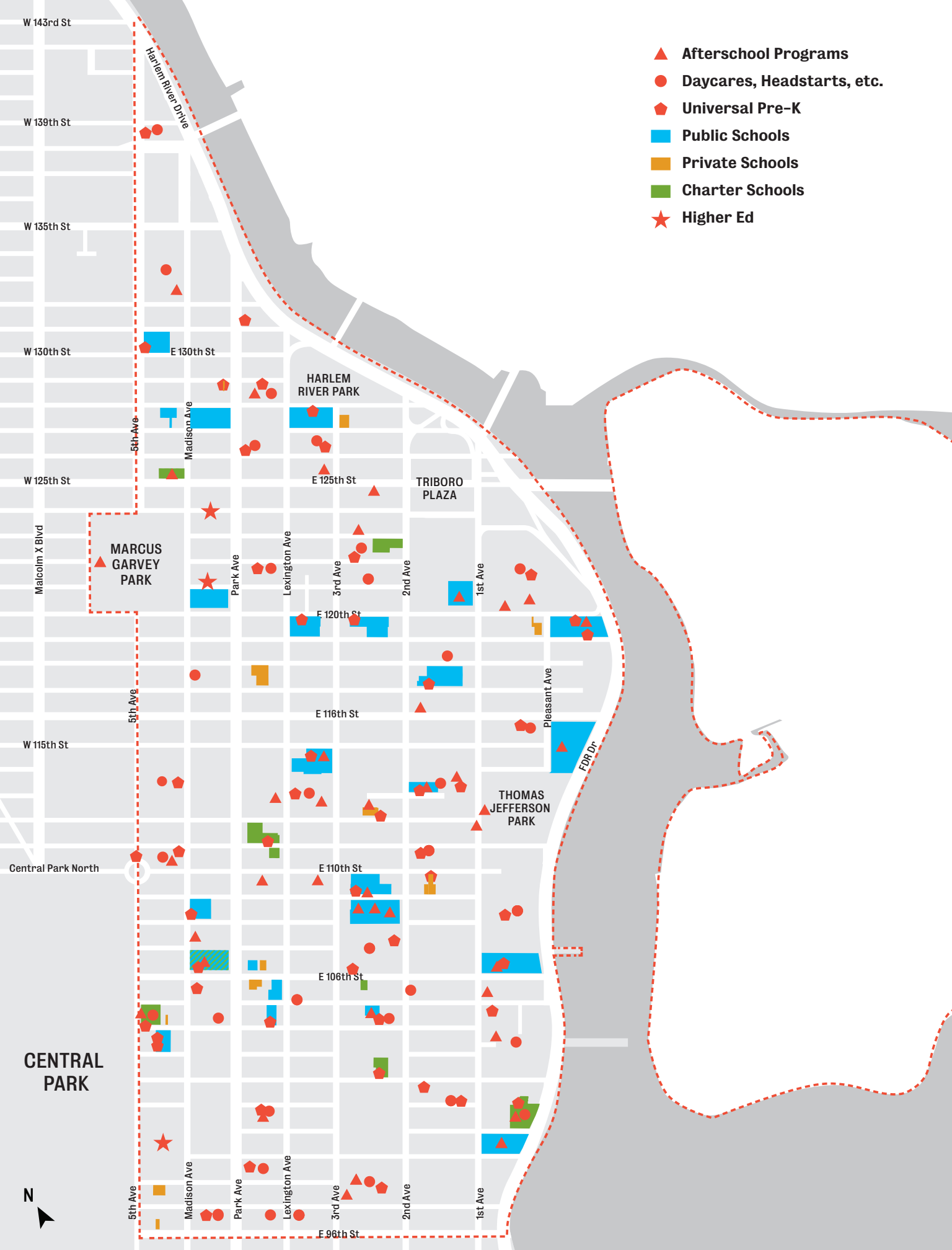
Afterschool Programs
Daycares, Headstarts, etc.
Universal Pre-K
Public Schools
Private Schools
Charter Schools
Higher Ed
W 143rd St
W 139th St
W 135th St
W 130th St
E 130th St
W 125th St
E 125th St
E 120th St
E 116th St
W 115th St
E 110th St
E 106th St
E 96th St
Harlem River Drive
HARLEM RIVER PARK
TRIBORO PLAZA
MARCUS GARVEY PARK
THOMAS JEFFERSON PARK
CENTRAL PARK
Central Park North
Malcolm X Blvd
5th Ave
Madison Ave
Park Ave
Lexington Ave
3rd Ave
2nd Ave
1st Ave
Pleasant Ave
FDR Dr
N

As part of the planning process, a survey was released to all public school principals in District 4, which encompasses a majority of the public schools in East Harlem. We asked principals to prioritize specialized programs by level of importance to their students and the needs of the district. The Schools & Education subgroup used this information as the basis of Recommendation 1.1.

TOP SERVICE NEEDS IDENTIFIED BY PRINCIPALS

1. Social Emotional Services
2. Academic Remediation
3. Literacy Programs
4. Mobile Computer Labs
5. Funding for Social Workers, Psychologists
6. Professional Development for Teachers
7. Restorative Justice Practices
8. Adult Education Programs
9. Health, Medical Services
10. Wrap-Around Services
11. SAT/ACT Prep
12. Autism Services

TOP CAPITAL NEEDS IDENTIFIED BY PRINCIPALS

1. Technological Enhancements: Hardware
2. Playground Redevelopment
3. Auditorium Upgrades
4. Air Conditioning Retrofits
5. Electrical work to sustain current and future technology in the building
6. Bathroom Upgrades
7. Electrical work for A/C unit installation
8. Technological Enhancements: Software
9. Library Upgrades
10. Technological Enhancements: Broadband and Phone Lines
11. Science Lab Upgrades
12. Safety Systems

A total of 24 principal surveys were collected.

OBJECTIVES & RECOMMENDATIONS

1.

Align specialized programs and services with the needs of East Harlem schools, and increase funding to support them.

1.1

As part of the planning process, a survey was released to all public school principals in District 4, which encompasses a majority of the public schools in East Harlem. We asked principals to prioritize specialized programs by level of importance to their students and the needs of the district. Based on the results of this survey, resources and funding should be prioritized for the following programs in the district (in order of importance):

- Social & emotional services
- Academic remediation
- Literacy programs
- Mobile computer labs
- Funding for social workers & psychologists
- Restorative justice practices

1.2

Create more Community Schools in East Harlem school districts. Ensure that any new school built as a result of the rezoning is structured as a Community School. ●●

2.

Create more diverse pathways to careers and college.

2.1

Increase the number of schools that offer Career and Technical Education (CTE) programs in East Harlem. Work with the Office of Postsecondary Readiness (OPSR) at the Department of Education to provide adequate guidance to East Harlem schools as they seek to fulfill the necessary elements for a new CTE program, including identifying adequate classroom and shop space, resources for equipment, materials and consumable supplies, and a teaching core able to teach the necessary amount of students.

2.2

Expand programs for early exposure to college by ensuring that the Mayor's "College Access for All" initiative reaches all East Harlem schools. This program will include expanded exposure to college for middle school students. All middle schools will begin to create college visit programs for all students and expanded curriculum at middle and high school will provide students with opportunity to gain exposure and support to plan for post high school college and careers.

●● Related to precedent on page 51

3.

Develop external partnerships and pull partnerships into schools.

3.1
Develop an East Harlem resource guide that schools can use to establish partnerships with CBOs and service providers, and that CBOs and service providers can use to find schools.

3.2
Enlist the resources of the NYC Office of Postsecondary Readiness and the Center for Youth Employment in the Office of Workforce Development to actively link interested high schools to East Harlem Workforce Development organizations and CBOs that can provide services to schools.

3.3
As the the NYC Department of Youth and Community Development Summer Youth Employment Program is expanded to the school year, ensure that the 2016-2017 pilot is expanded to at least one East Harlem program.

4.

Address significant capital and capacity needs facing East Harlem schools.

4.1
Increase the number of high schools that have open non-competitive admissions policies in East Harlem.

4.2
Perform electrical work to sustain current and future technology in East Harlem school buildings, such as computer labs, broadband internet, phone service, and air conditioners. Begin with an initial allocation to PS108, located along the Park Ave. viaduct. The school lacks the electrical capacity to run A/C's in the summer, nor can they open their windows due to the noise from the viaduct.

5.

Expand professional development opportunities for educators in East Harlem.

5.1
Increase funding for teacher training in East Harlem schools.

SCHOOLS & EDUCATION / PRE-K, DAYCARE & AFTERSCHOOL

(CONTINUED) OBJECTIVES & RECOMMENDATIONS

6.

Improve existing pre-K, daycare and afterschool facilities, and ensure that quality spaces are created within new buildings.

6.1
Prioritize pre-K, daycare and afterschool facilities for repairs or relocation based on a comprehensive inventory and prioritization study of these facilities in East Harlem.

6.2
Encourage expanded shared-use agreements between pre-K, afterschool and daycare programs and schools, institutions of higher learning and hospitals to access facilities after hours and during off hours (computer labs, media centers, gyms, libraries, playgrounds, indoor pools, etc.). Additionally, these spaces should be affordable to rent so as to not prohibit programs from taking advantage of these joint agreements.

6.3
Improve internet and phone infrastructure in East Harlem pre-K, daycare and afterschool facilities.

7.

Create more center-based programs for 0–3 year olds.

7.1
Expand Universal Pre-K initiatives to include 0-3 year old programming.

8.

Ensure that programming is high quality, consistent, and well-funded.

8.1
Support the following three initiatives from the Campaign for Children policy platform: (a) Implement universal access to full-year, full-day early childhood education; (b) Ensure salary parity for equally credentialed staff in the public school system and early care system; (c) Provide a sufficient per-child rate to ensure quality standards are met.

9.

Create greater awareness of existing programming.

9.1
Increase the amount of afterschool program seats in East Harlem.

9.2
Document existing available afterschool programming and share this information with the community, both online and in hard copy. Ensure this information is available in multiple languages including Cantonese, Mandarin, Spanish and French.

PRECEDENT

Community Schools

The research-based Community School model has a proven track record of improving academic achievement. Community schools are matched to an effective community-based organization and a full-time in-school Community School Coordinator. The model creates strong partnerships to provide social services, counseling and mental health support, targeted academic interventions, and to engage entire families and communities as part of a holistic approach towards elevating educational outcomes. The NYC Community Schools Initiative, an effort of Mayor de Blasio's administration to re-imagine the City's school system, will create approximately 100 new fully-developed Community Schools over the next several years.

The City faces several challenges as it tries to create high-quality community schools across the system, including data tracking and academics. Experts agree that school staffers and outside service providers must plan and work together to pull off the community-school model, and that requires sharing data about individual students' needs and their performance in class and afterschool programs.

This precedent relates to Recommendation 1.2
Sources: http://www1.nyc.gov/site/communityschools/index.page
http://ny.chalkbeat.org/2015/05/04/now-aiming-for-200-community-schools-city-unviels-a-plan-to-get-there/#.VmXzO7grLcs

Helio-Chronometer, 104th Street and Lexington Ave
© Kate Milford 2016

Harlem RBI/DREAM Charter
Afterschool program
Courtesy of Harlem RBI/DREAM Charter School

SCHOOLS & EDUCATION / PRE-K, DAYCARE & AFTERSCHOOL

COMMUNITY VISIONING WORKSHOP #3

NYCHA / Housing Preservation

July 29th, 2015
6:30–8:30pm

at Johnson Houses Community Center

150 Participants

The third community visioning workshop focused on Affordable Housing Preservation, led by El Barrio's Operation Fight Back (EBOF), and NYCHA, led by the Johnson Houses Tenant Association. Participants were invited to choose which of the two topics they preferred to discuss during the small group portion of the workshop. For both topics, participants were asked to identify strengths and challenges. For Housing Preservation, participants had in-depth conversations about tenant harassment, affordability, displacement, neighborhood change and the physical conditions of housing in East Harlem. For NYCHA, participants had in-depth conversations about repairs and maintenance in public housing developments, safety, economic empowerment for public housing residents, how open space within NYCHA developments could be better utilized, concerns about development on NYCHA land and what meaningful resident engagement in decision making looks like.

61%

of EHNP survey respondents say they are concerned with:

DISPLACEMENT

of poor, working class & seniors

63%

of EHNP survey respondents say they are concerned with:

RISING COST OF HOUSING

1

Public housing has been a significant part of the East Harlem community for the last 65 years. Growing out of local activism and the leadership of politicians such as Fiorello LaGuardia, who represented the area in Congress, East Harlem became the epicenter of urban reform in New York City. East River Houses was the first public housing built in East Harlem, with Jefferson Houses and Johnson Houses being built in the following years. By 1965, a quarter of all East Harlem residents lived in public housing (Samuel Zipp, p. 260).

NYCHA

2

34,240 people (28%)

of East Harlem residents live in NYCHA

Source: 2015 NYCHA Data Book

East Harlem's NYCHA residents represent

9%

of New York City's entire NYCHA population

Sources: 2015 NYCHA Data Book, U.S. Census Bureau, 2010–2014 American Community Survey 5-Year Estimates

1 Rooftop view of East Harlem and the Park Ave viaduct © L. Reynolds
2 George Washington Houses © John McCarten / New York City Council
3 Corsi Houses La Guardia Memorial House. Courtesy of NYCHA

3

As a result of this focus on urban renewal, East Harlem today has the greatest concentration of public housing in Manhattan, with almost 30% of East Harlem residents living in New York City Housing Authority (NYCHA)-owned properties. Public housing developments contain considerable open space where residents exercise, play and relax. They also provide many meeting places, support services and other important facilities. With such a large stake in the neighborhood, the strengths and assets of NYCHA housing have a major impact on the neighborhood. The neighborhood has an active community of tenant leaders/activists, in part because of the density of public housing, tenant associations and community-based organizing groups that focus on improving housing conditions, preserving public housing and creating community action and organization around a range of local concerns.

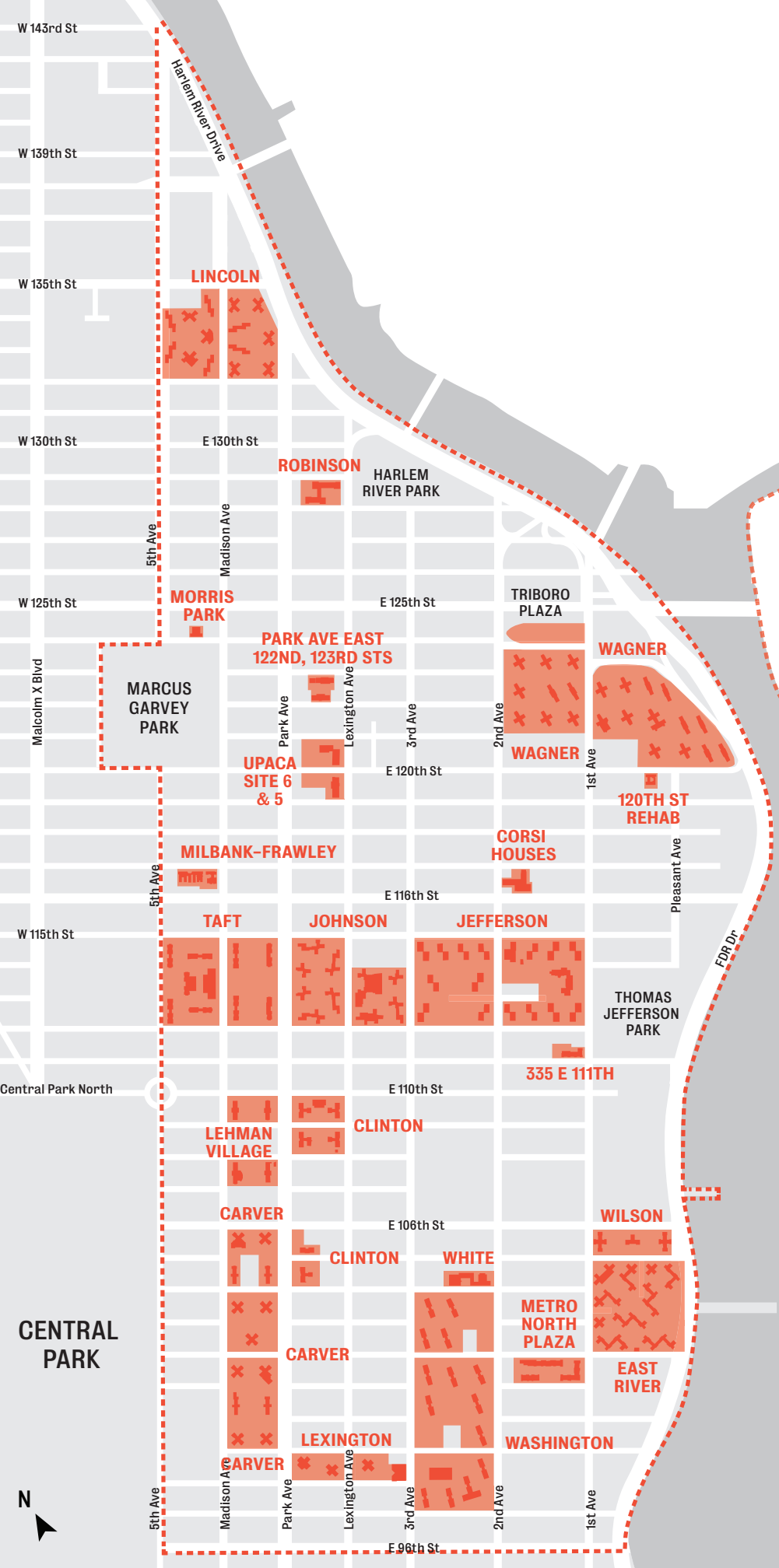

NYCHA's General Fund deficit in 2015:

$74M

5-year major capital needs as of 2015:

$17B

Source: NYCHA Executive Budget Hearing: Committees on Public Housing and Finance. June 8, 2015

Average repair times in all NYCHA developments

December 2014:

28 days*

December 2015:

47 days*

NYCHA Target:

15 days**

Sources: * NYCHA Metrics Public Housing Charts 2016 ** NYCHA Minutes of Board Meeting 11/26/2014

Open work orders on NYCHA properties city-wide

December 2014:

103,000

December 2015:

139,000

Source: NYCHA Metrics Public Housing Charts 2016

The Neighborhood Plan addresses several challenges that NYCHA residents identified. Key challenges are described below:

- NYCHA has undergone a series of Federal and State budget cuts over the last two decades, resulting in significant disinvestment in NYCHA buildings and operations. Some East Harlem NYCHA developments have over 1,000 open work orders. Ensuring repairs in NYCHA homes are carried out efficiently and effectively is a major issue—one that NYCHA residents and tenant associations have been actively advocating and organizing around.

- Improving communication between NYCHA management and residents is critical. Specifically, NYCHA residents need to have a strong voice in how NYCHA developments are managed and how future plans are developed. NYCHA residents emphasized the importance of influencing how the NextGen NYCHA plan, which includes potential new residential construction on NYCHA developments in order to generate funds for NYCHA building repairs and to create affordable housing, is being rolled out. While some residents at the Visioning Workshop opposed development on NYCHA vacant land, others were open to the possibility, if residents were adequately informed, engaged in dialogue about condition constraints and possible solutions, and were able to vote on whether or not development on NYCHA property was the right answer for their particular development.

- As families that live in NYCHA developments change over time, it may become harder to accommodate growing households or for seniors to downsize and move into accessible units locally within the NYCHA community they know. More attention to this issue is required in order to serve local needs and maintain community ties and cohesion.

- Elected officials and NYCHA have taken significant steps to ensure that NYCHA residents are safe within their own buildings and on their developments. More can be done to encourage strong communication within the NYCHA community, new approaches to policing developed in conjunction with the New York Police Department, and addressing physical design and operational issues around lighting and building entrances.

- A critical concern is the high rates of unemployment among young people living in NYCHA. As a result, it is critical to continue to strengthen NYCHA's workforce training initiatives and provide access to jobs that lead to careers through activities such as the Jobs Plus Program.

OBJECTIVES & RECOMMENDATIONS

1.

Ensure that repairs are made on NYCHA developments efficiently and using high quality workmanship.

1.1
Create a more effective and transparent Optimal Property Management Operating Model (OPMOM) program if and when it is expanded to East Harlem developments. Improve training of managers to listen to the needs of their residents. Improve relations between managers and central NYCHA divisions. Allow for weekend and overnight repairs. Provide managers more flexibility in whom they may call for repairs.

1.2
Establish an East Harlem pilot where unions agree to a trial shift system for after hours and weekend repairs in East Harlem NYCHA developments.

1.3
Bring the NYCHA One Call program (where NYCHA repair task times and employees are digitally tracked) to all East Harlem NYCHA developments.

1.4
Return to previous system of district-wide annual budgeting sessions with NYCHA staff and resident leaders twice a year.

1.5
Conduct annual inspections of units in East Harlem NYCHA developments in order to (a) anticipate a timeline for future repair needs, and (b) conduct repairs on the spot during those inspections whenever feasible. Ensure that annual inspections are decoupled from identifying violations.

2.

Improve safety and security on NYCHA developments.

2.1
Make another round of investment to enhance security at targeted East Harlem developments, modeled after the $101 million fund allocated in December 2014 by the Mayor and the District Attorney to the 15 most violent developments in NYC. With input from residents, focus the funds on infrastructure improvements (lighting, cameras and layered access), and violence reduction programming.

2.2
Reintroduce the Safety and Security Task Force in NYCHA and ensure meaningful partnerships with NYPD, DA, CBO's, City Hall, Law Dept., resident watch supervisors and NYCHA residents.

2.3
Formalize the community policing engagement approach being undertaken at Johnson Houses across East Harlem developments. There should be a joint effort between NYPD and residents to initiate this program/process.

3.

Improve NYCHA administrative transitions and their effects at the development level.

3.1
Formalize a communication protocol between former and newly appointed leadership and resident associations when there is a transition. Inform district chairs as soon as any major administrative changes at NYCHA are made. Ensure that projects and programs already allocated or underway from a prior administration are retained whenever possible.

4.

Improve engagement, communication, and information provision to NYCHA residents.

4.1
Work with TA leaders to develop a resident and community engagement strategy around major decision making, including returning to the model of monthly meetings with superintendents and managers. Include District Managers in an effort to pass information to the District Manager's supervisor at NYCHA's main office.

4.2
Inform individual residents if their home has been identified through the NextGen Plan as (a) one of the 6,380 public housing units in scattered-site developments that could be converted to project-based Section 8, or (b) one of 8,313 public housing units in properties where the cost of rehabilitation exceeds the cost of new construction ("obsolete units") and where these could be converted to project-based Section 8 through a combination of RAD and HUD Tenant Protection Vouchers.

5.

Create mechanisms for resident involvement in decision-making around development on NYCHA land.

5.1
Allow residents in public housing developments in East Harlem to decide, after a robust and authentic community engagement process, whether or not they want to permit new residential construction on their development sites.

5.2
If infill does go forward in a development:

5.2.1 *
Ensure that revenues generated by development are funneled into on-site development improvements, with the development directly impacted being the first recipient of those revenues.

5.2.2 *
Create a governance structure (comprised of a combination of NYCHA residents, TA's and community organizations) to advise on and monitor the spending of revenues generated by infill development.

5.2.3 *
Provide for NYCHA resident input into levels of affordability for development, as well as siting, design, density, unit types and parking.

5.2.4
Prioritize a percentage for homeless placement in newly created units.

5.2.5
Prioritize a percentage for senior placement in newly created units.

* Oppose: Community Voices Heard

NYCHA

(CONTINUED) OBJECTIVES & RECOMMENDATIONS

6.

Create opportunities for economic empowerment for NYCHA residents.

6.1
Provide workforce training opportunities for NYCHA residents and ensure that information about opportunities and courses are distributed in a timely manner (at least 6 months in advance).

6.2
Provide opportunities and spaces to support resident entrepreneurship (e.g. an incubator program in East Harlem NYCHA spaces; expanded links with SBS for additional business development support).

6.3
Provide job training for NYCHA residents interested in seeking employment opportunities within their own or nearby developments and give preference to NYCHA development residents when hiring.

6.4
Bring broadband and wifi access to all East Harlem NYCHA developments. One potential model is the Red Hook Houses initiative where the Open Technology Institute helped set up a wireless mesh throughout the development.

7.

Improve NYCHA open spaces.

7.1
Improve and activate NYCHA open spaces where feasible (set away from the buildings) and build stronger connections to other green spaces within the neighborhood through wayfinding. Consider passive recreation (e.g. seating and benches), active recreation (playgrounds or ball courts), and urban agriculture (e.g. community gardens, Concrete Safaris). Build a stewardship plan into any improved open spaces that encourages participation and leadership of residents, particularly youth.

PRECEDENTS

Participatory budgeting vote site located in a public housing development in Gowanus, Brooklyn © Community Voices Heard

Urban Upbound & Citi Launch 1st Worker Cooperative for NYCHA Residents, Courtesy of Citibank

Participatory Budgeting

Participatory budgeting (PB) is a different way to manage public money and to engage people in government. It is a democratic process in which community members directly decide how to spend part of a public budget.

Though each experience is different, most follow a similar basic process: residents brainstorm spending ideas, volunteer budget delegates develop proposals based on these ideas, residents vote on proposals, and the government implements the top projects.

Participatory budgeting started in NYC in 2011 with four council members, including Speaker Melissa Mark-Viverito, and $4 million. It has since grown to 28 participating districts and over $35 million. There is also an initiative poised to start for PB in NYCHA, wherein residents will be able to decide directly how money targeted to NYCHA developments will be spent.

A similar process to PB could be utilized for NYCHA resident decision-making, such as around infill development and how to allocate funds raised through any infill development.

On Point Security NYCHA Cooperative

In July 2015, NYCHA and Citibank announced "Doorways to Opportunity," a multi-partner initiative that provides public housing residents across New York with access to employment opportunities, free financial counseling and entrepreneurship training in partnership with community organizations. The collaboration included the launch of the first worker cooperative for NYCHA residents, On Point Security, where employees are also business owners. The security firm will serve and protect the expanding Hallets Point neighborhood.

Source: http://www1.nyc.gov/site/nycha/about/press/pr-2015/nycha-citi-announce-economic-empowerment-program-2015-07-16.page

Housing Preservation

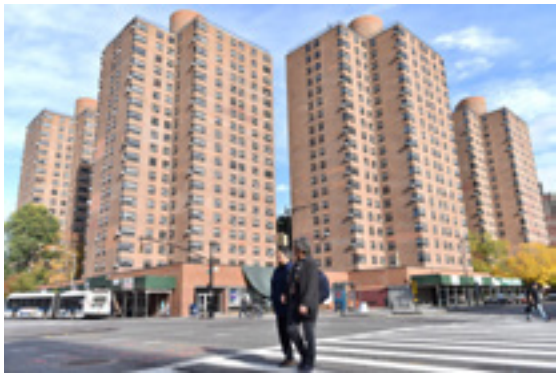

1

2

Housing affordability is central to the quality of life in East Harlem, as well as essential to its history. Today, about eighty percent of all people in East Harlem live in some form of regulated housing. East Harlem, like many parts of New York City, experienced significant housing abandonment and neglect throughout the 1970s. The City intervened with affordable housing services and programs, as well as support for a not-for-profit affordable housing development and management infrastructure that would nurture this housing. In East Harlem alone, hundreds of millions of dollars were spent on gut renovations and new construction of affordable housing in response to this era of abandonment and neglect.

Today, with East Harlem losing more and more of its affordable housing stock, this important community asset is significantly threatened. Over the last several years the neighborhood has lost approximately 360 rent-regulated units per year as various rent subsidy programs in buildings reach the end of their terms. Over the next 15 years, an estimated average of 280 units per year will be lost. This situation places many long-term East Harlem residents—many of whom are already marginalized and disenfranchised—in danger of losing their homes and being forced out of their community.

3

4

While building new affordable housing is important, it is critical to maintain the large stock of affordable housing that already exists in East Harlem. Affordability of housing is very important to residents; they identified it as one of their top priorities for the future of their community. The neighborhood also has a strong network of community organizations dedicated to producing and protecting affordable housing, and benefits from a recent infusion of resources for tenant legal services from the City.

1 Franklin Plaza © John McCarten / New York City Council
2 Taino Towers © Mario Burger
3 1199 Housing Corporation East River Landing © Mario Burger
4 5-story walkups at 107th St and Lexington Ave © Kate Milford 2016

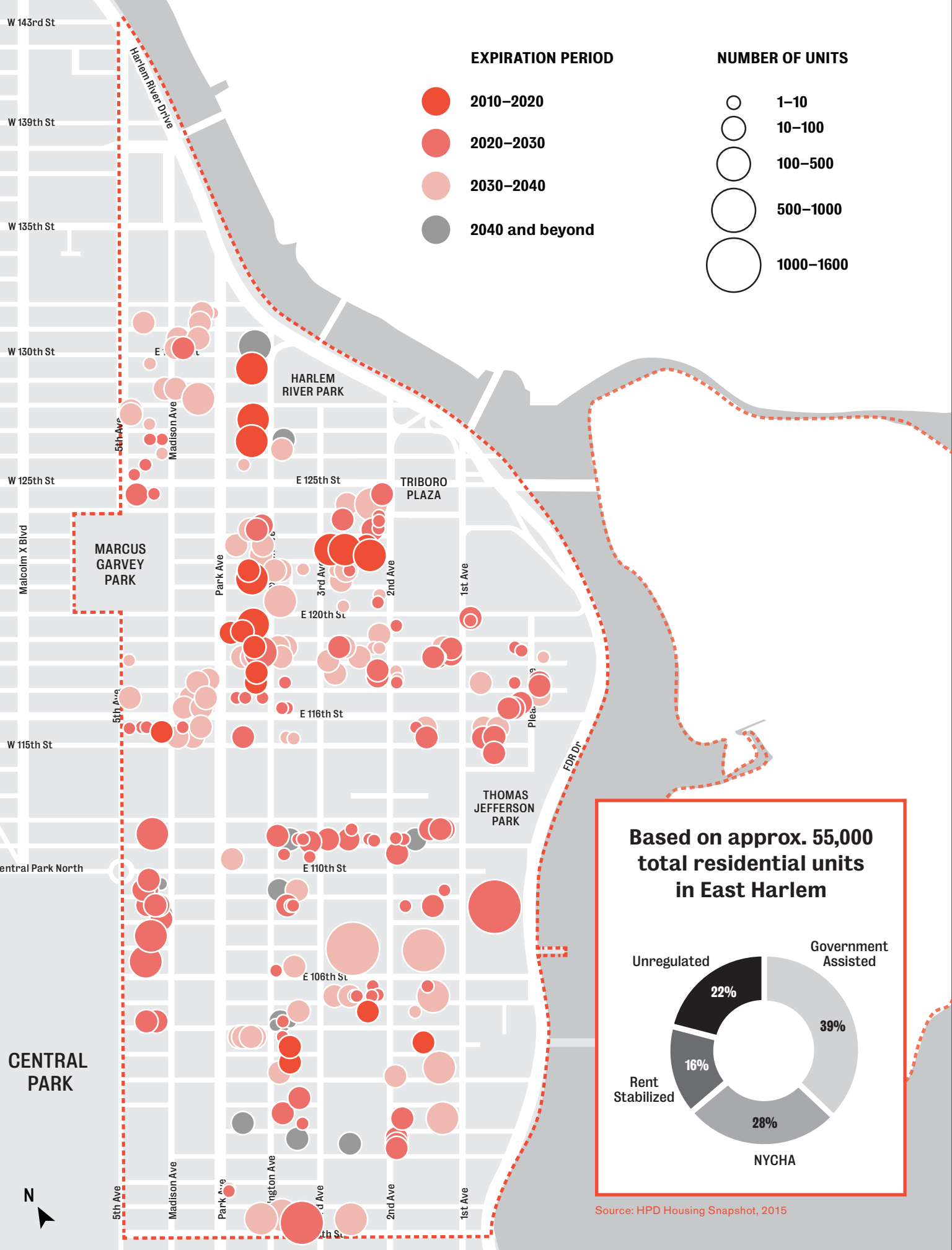

Source: HPD Housing Snapshot, 2015

Despite these strengths, there are many challenges to preserving affordable housing in East Harlem.

- Tenant harassment often goes hand-in-hand with the loss of affordable housing. Renters of affordable units face threats of harassment and eviction or neglect when their buildings and units need maintenance. To effectively preserve affordable housing and keep tenants in their homes, the problems with maintenance and tenant harassment must be addressed.

- Access to affordable units is also uncertain. If lottery programs are not managed transparently and fairly, residents may not have real access to affordable units in their own neighborhood.

- Beyond direct threats to housing preservation, it is important that other neighborhood amenities remain affordable. True neighborhood affordability encompasses both residential costs and the costs of goods and services necessary to meet the needs of daily life.

- There are issues with buildings in East Harlem being warehoused, rather than being used productively for affordable housing, as those owners wait for shifts in development trends. East Harlem residents want to address warehousing and free up this stock for affordable housing production.

- There are issues with quality of housing in East Harlem. Housing preservation also means keeping units that are affordable up to code and in good, quality condition.

- A sizable portion of affordable units are within multi-family buildings omitted from rent-stabilization and a targeted strategy must be created to prevent losing these units to rising rents fueled by improving conditions and speculation.

- State regulation is one primary way to preserve rent-regulated housing not created as the result of zoning or tax incentives. That situation sometimes limits the ability of the city to use legislation to preserve affordable units.

OBJECTIVES & RECOMMENDATIONS

1.

Ensure appropriate enforcement of tenant rights to prevent harassment.

1.1
Ensure that legal aid funding is extended following the 3-year program currently in place.

1.2
Expand sharing of information among Tenant Support Unit/HRA/Legal Services and East Harlem CBOs through a standing task force meeting.

1.3
Provide additional funding and training to CBOs that engage in tenant protection issues in East Harlem.

1.4
Expand the distribution of HPD's ABC's Of Housing, including more thorough distribution to new tenants and existing tenants renewing their leases.

1.5
Lobby at the State level to change illegal and legal rent fee structure. Raise awareness of what fees are and are not legal. Increase the number of audits and personnel in East Harlem looking into illegal non-rent fees and fraudulently applied rent fees.

1.6
Work with the newly-established Civil Justice Coordinator to coordinate the use of local resources, with the eventual goal of providing counsel to all New Yorkers in certain civil matters.

1.7
Create an East Harlem anti-harassment / anti-eviction district, modeled after the Special Clinton District. Include funding for CBOs organizing along with the designation, as CBOs are often assisting and reporting on behalf of tenants in harassment incidents. ●●

1.8
Improve the mechanism by which rezonings are announced in a neighborhood, and by which communities can prepare themselves against harassment before a rezoning takes place, such as through required additional community forums and workshops. Include funding for CBOs and developers to host these forums and workshops.

●● Related to precedent on page 69

2.

Preserve affordability of current rent stabilized units and prevent unit destabilization.

2.1
Expand the resources available to East Harlem building owners and developers to preserve affordable units by creating a neighborhood-wide HPD funding set aside.

2.1.1 *
Focus the uses of these funds on privately-owned stabilized buildings in major distress and needing repairs.

2.1.2
Focus the uses of these funds on affordable units within public financing programs set to expire over a set number of years.

2.1.3
Focus the uses of these funds on unregulated 1-5 unit buildings that could be brought into a preservation program.

* Oppose: Community Voices Heard

2.2
Clearly define illegal Airbnb activity, and improve the enforcement of regulations by proactively utilizing data, to protect the community's existing stock of rent regulated housing from being used inappropriately.

2.3
Remove barriers to not-for-profit affordable housing developers to protect (and create) affordable housing in East Harlem, such as through: (a) Lowering HPD RFP equity requirements for not-for-profit organizations; (b) Providing a discount on water and sewage charges if the developer is providing units at income bands at or below 50% of AMI.

2.4
Create greater incentives for private sector investment in not-for-profit affordable housing development, such as by increasing tax incentives made available to investors and, in return, ensuring the provision of additional community benefit services by the developer.

2.5
Consider the location of existing affordable units (both regulated and unregulated) as a central decision factor in establishing a rezoning area boundary.

3.

Better prepare East Harlem residents for affordable housing lotteries.

3.1
Provide resources that enable individuals applying for housing lotteries to pull together required documentation. Simplify documentation that is needed and expand the forms of documentation that are acceptable.

3.2
Require private developers to hire a local third party organization to conduct lottery counseling and marketing, and require proper compensation for these services.

3.3
Mandate that housing lotteries have detailed information made available at the construction site, including a nearby location of where to pick up a lottery application.

3.4
Establish a neighborhood-wide housing preparedness clinic that holds regularly scheduled sessions, so that tenants are well-prepared for lotteries.

3.5
Create a community input process for establishing criteria for housing lotteries for special populations (senior, artist, homeless, etc.), and ensure that HPD requires and properly funds selected developers to adhere to the criteria.

4.

Improve Agency information-sharing to identify tenant harassment.

4.1
Create an information-sharing agreement between CBOs and HPD/DOB to share tailored data sets on affordable housing, building violations, and harassment. Use CASA/HPD information-sharing in the Bronx as a precedent.

4.2
Train East Harlem CBOs to synthesize the tailored data sets they are obtaining from HPD/DOB.

5.

Preserve the use of vacant, underutilized, and distressed land/properties for affordable housing.

5.1
Pilot the Urban Homesteading Assistance Board's recommendations for the City's tax liens policy in

HOUSING PRESERVATION

East Harlem. For rental housing where there is outstanding tax debt, pursue one of the following policies: (a) City enters into a payment plan with existing owner that includes rent regulation of exiting units, or (b) for owners that continue to not pay outstanding tax debt, the City initiates foreclosure and uses the existing Third Party Transfer program to transfer the buildings to an affordable housing provider. Ensure that the City continues to withhold tax debt on low income cooperatives from the lien sale in favor of working with the cooperators on a plan to stabilize those units.

5.2

Support the growth of a community land trust (CLT) in East Harlem by recommending that the City commit to transferring a small list of City-owned buildings, at-risk HDFCs, vacant/distressed properties, and under-utilized public land in East Harlem to CLT stewardship, and provide up-front financing to support the preservation of low-cost housing, in partnership with proven nonprofit affordable housing developers. Experienced, locally-based nonprofit affordable housing developers should also have representation on the CLT board. ●●

5.3

Create a city-wide unused/underutilized property registry. Pilot the registry in East Harlem. Include information about expiring stabilization programs.

5.4

Use EDC/HPD acquisition funds to purchase warehoused properties that would be conveyed to an affordable housing developer through an RFP process.

5.5

Study the establishment of a special district for fee capture on the transaction of air rights to preserve existing affordable housing.

6.

Ensure housing is in a good state of repair and better enforce the requirements of the warrant of habitability.

6.1

Pilot the following specific initiatives in East Harlem:

- Have HPD initiate housing court actions on any building where over a certain number of violations exist (the typical definition for statutory distress is 4 or more B&C housing code violations per unit).
- Have HPD refuse to forgive fines when a building meets a certain threshold based on the number of violations, their severity, and how long they've existed.

[Exempt HDFC's and non-profit owner groups from these initiatives.]

6.2

Endorse the Stand for Tenant Safety Coalition Legislative Platform to Reform the Department of Buildings. The Stand for Tenant Safety Coalition Legislative Platform is included in Appendix C of this report.

6.3

Require DOB and HPD to coordinate prior to any DOB vacate order; and refer tenants to legal aid in these circumstances.

6.4

Support the oversight work of the Tenant Harassment Prevention Task Force by including more representation on the task force of East Harlem community CBOs. In addition, seek that the Task Force place additional focus on and enforcement resources into the neighborhoods undergoing rezoning.

7.

Maintain affordability of neighborhood amenities.

7.1

Preserve retail affordability for local small businesses by making additional loans and grants available, and through studying the potential for a retail rent stabilization program.

●● Related to precedent on page 69

PRECEDENTS

Special Clinton District

One of the primary examples of effective anti-displacement measures in a rezoning is the Special Clinton District. Located west of the Theater District in Midtown Manhattan, the special district includes height limits, anti-demolition measures for existing housing, protections against tenant harassment, and requirements specifically related to preserving the neighborhood's mix of incomes. In order to demolish or significantly alter a building, a landlord has to prove to the City that she or he has no history of tenant harassment. Otherwise, the landlord is required to create affordable housing. Another feature is that the Special District extends well beyond the actual area that was rezoned. This is important, because real estate speculation is not limited to rezoned lots, but occurs within a much larger area.

Despite its strengths, there is room for improvement in the approach the Special Clinton District employs. This designation, though powerful, does not assist tenants in market-rate units, since landlords can rid themselves of such tenants without harassment tactics. Landlords can still legally offer buy-outs to tenants in rent-stabilized units. The approach can also be viewed as punishing bad landlords without effectively preventing their actions from occurring in the first place. It is therefore important that additional and complementary strategies are employed to ensure that this anti-harassment policy can more fully and immediately benefit tenants.

This precedent relates to Recommendation 1.7
Source: Association for Neighborhood Housing and Development, Urban Justice Center

Cooper Square Community Land Trust (CLT)

Community Land Trusts (CLTs) are nonprofit organizations—governed by a board of CLT residents, community residents and public representatives—that provide lasting community assets and permanently affordable housing opportunities for families and communities. One of the preeminent land trusts in New York City is the Cooper Square Community Land Trust.

In response to an urban renewal project proposed by Robert Moses in 1959, the Cooper Square Committee (CSC) organized the community to create their own plan to preserve existing housing and build new low-income units. After advocating for their "Alternate Plan" for ten years, it became the first community-initiated plan New York City ever adopted. In 1991, CSC established the Cooper Square Mutual Housing Association (MHA) to manage 303 multifamily residential units on land owned by the Cooper Square Community Land Trust. The cost to join the MHA was, and still is, $250. Community Land Trusts are just one form of limited-equity housing meant to facilitate home ownership for low-income families and permanent affordability.

This precedent relates to Recommendation 5.2
Source: Tom Angotti, "Community Land Trusts and Low-Income Multifamily Rental Housing: The Case of Cooper Square, New York City." 2007.

COMMUNITY VISIONING WORKSHOP #4

Small Businesses, Workforce & Economic Development

September 10th, 2015
6:30–8:30pm

at Children's Aid Society

120 Participants

The fourth Community Visioning Workshop focused on Small Businesses, Workforce & Economic Development and was led by Union Settlement. Participants first discussed strengths and challenges of current neighborhood conditions as they relate to the Workshop topics. Participants then completed a mapping activity, identifying where people shop in the neighborhood at different times of day, where development should occur and where people feel safe and unsafe. Participants also had in-depth conversations and brainstormed solutions around small business needs, workforce development and how to create access to high-quality jobs for East Harlem residents.

What type of workforce development would you like to see in East Harlem?

81%
want to see growth of LOCAL JOBS with LIVING WAGES

69%
want to see CONTINUING EDUCATION PROGRAMS

40%
think JOBS and TRAINING are MISSING

61%
want to see GROWTH of UNION JOBS

1

1 Francisco and Balvina Garcia, owners of Mexico Lindo on 116th St and 2nd Ave © Kate Milford 2016
2 Hot Bread Kitchen at La Marqueta © Kate Milford 2016
3 Urban Garden Center at La Marqueta © Kate Milford 2016
4 Entrance to La Marqueta © Kate Milford 2016

Small Businesses,

While primarily a residential neighborhood, East Harlem has a large number of businesses and nonprofits that together employ over 40,000 individuals. The neighborhood's many employers reinforce the cultural, ethnic and economic diversity in the neighborhood. The small businesses offer goods and services that residents need at prices they can afford, and there are major hospitals and museums, as well as many smaller nonprofits, that provide a broad range of employment opportunities.

East Harlem has an active workforce with many more who are seeking work. Many people work outside East Harlem due to its transportation links, but there are also opportunities for greater employment with local organizations and possibilities for capturing East Harlem's entrepreneurial energy through innovative incubators such as La Marqueta.

2

3

4

Workforce & Economic Development

UNEMPLOYMENT

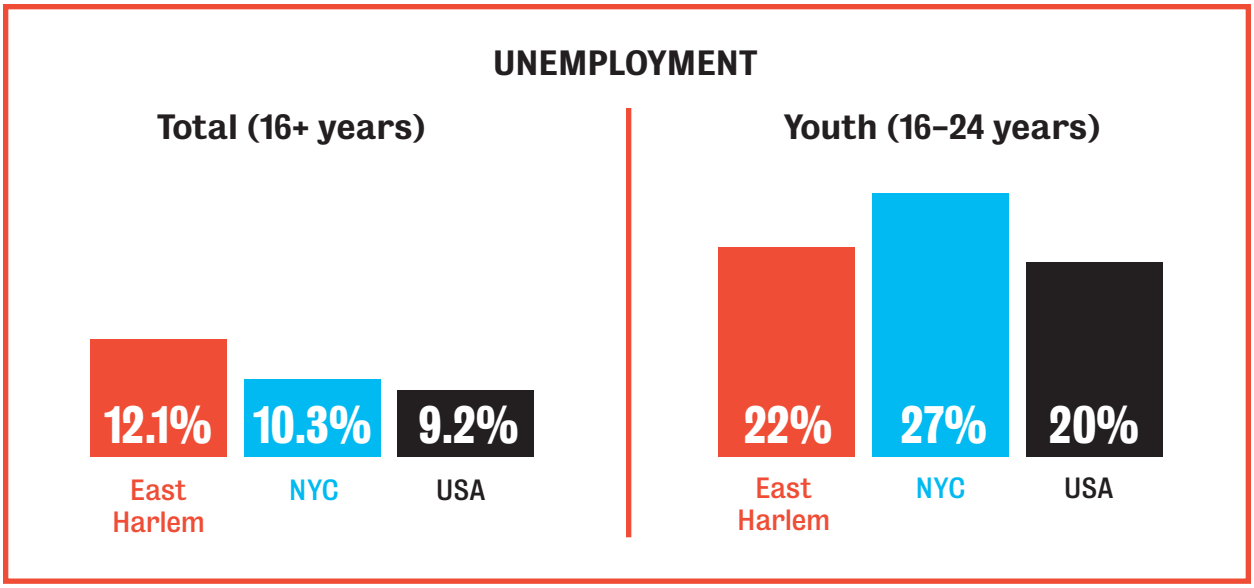

Source: U.S. Census Bureau, 2010–2014 American Community Survey 5-Year Estimates

RESIDENT COMMUTE PATTERN TO WORK (2013)

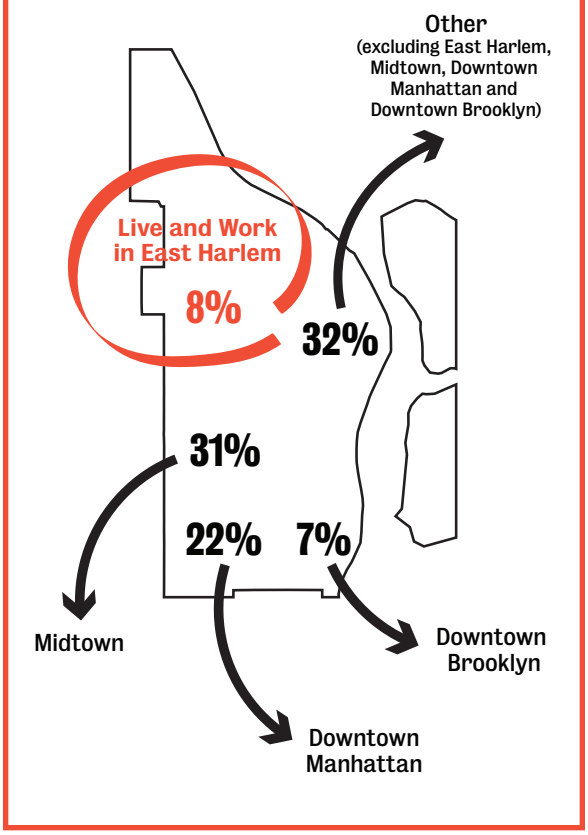

Source: Hoover's 2012, for zip codes 10029, 10035, 10037

LOCAL JOBS & JOB GROWTH

There are
40,000
local jobs
in East Harlem

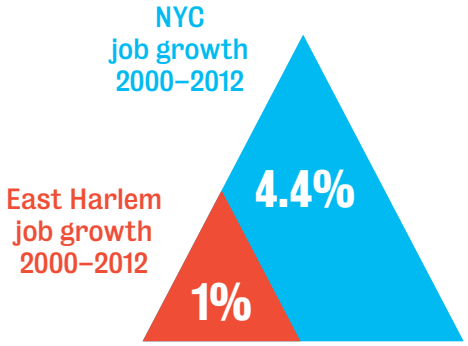

Sources: U.S. Census Bureau, 2015. OnTheMap Application, Longitudinal-Employer Household Dynamics Program, 2013. U.S. Census Bureau Zip Code Business Patterns for 2000 and 2012

The community visioning session identified some of the key challenges.

- Some of the commercial corridors have sections that lack continuous, vibrant activity. There is an opportunity to change land use and zoning to address these areas.

- Despite being a diverse and historically significant neighborhood, East Harlem has not capitalized on NYC's strong market for tourism, which could strengthen the economy of the neighborhood. East Harlem's many restaurants and cultural institutions, through a collaborative approach, could create local jobs.

- Workforce development programs that aim to create a competitive workforce have the potential to do more. Many community members are unaware of the resources that could help them find the type of job they want, and there may be additional opportunities to leverage relationships with employers throughout the neighborhood.

- Potential new development should bring construction jobs and permanent jobs for local residents, along with increased commercial activity. When new development and new commercial activity does come to the neighborhood, local residents often miss the opportunity to benefit, and the recommendations aim to help capture these opportunities.

- Rising commercial rents are a major challenge, and small businesses are also threatened by big box stores that can reduce their base of local shoppers. Support programs for small businesses exist but could be strengthened.

- There is a need for good jobs to come into the neighborhood and the ability to connect local residents to jobs that pay living wages, have good benefits and offer opportunities for career advancement.

OBJECTIVES & RECOMMENDATIONS

1.

Increase quality employment opportunities for East Harlem residents.

1.1
Where possible require developers to set local hiring targets for East Harlem residents, and giving East Harlem residents the first opportunity to interview for positions. The Community Board, Borough President and Council Members can advocate for these actions on projects they review.

1.2
Create a better mechanism for overseeing developer performance on their agreements to hire East Harlem workers (e.g. requiring developers seeking public approval to provide quarterly reports on local hiring to the Community Board, Borough President and Council Members, as well as to the local workforce development provider network, which can track and post those reports). Add community and union oversight to assure quality hires. Make quarterly reports public.

1.3
Encourage local employers, including building management companies, to hire local residents. This can be accomplished by providing funding to a local workforce development provider network that facilitates local hiring by identifying, screening and referring local residents to employers seeking to hire locally, as well as to developers looking to build in East Harlem. Ensure local workforce development providers have good track records for connecting people to jobs and ensuring that they are quality jobs.

1.4
Work with labor unions to build pre-apprenticeship programs for East Harlem residents and workforce development partnerships with pathways to union jobs.

2.

Enhance the skills of East Harlem residents, which will allow them to succeed in the workforce.

2.1
Provide more funding to workforce development programs in East Harlem, with a focus on career training, not just entry-level jobs, and encourage connections to actual jobs being created. ●●

2.2
For all public projects (with a threshold to be established for when this requirement is triggered), other than affordable housing projects already benefiting from subsidies, there should be a 1% set-aside for local job training programs, modeled on the "Percent for Art" requirement.

2.3
SBS should open a satellite Workforce 1 center in East Harlem and should build connections between that center and major East Harlem employers. Workforce 1 should also coordinate with local community-based organizations and trades unions to ensure good connections to employers. Secure additional funding for programming and staffing at this center in order to provide career training and job placement services specifically for youth in East Harlem aged 16-24. ●●

2.4
Work to ensure that HRA's job readiness and placement efforts are coordinated and integrated with other job training programs in East Harlem.

2.5
Increase funding for programs that help local residents learn English, obtain their high school equivalency degree, become citizens or prepare for college.

●● Related to precedent on page 79

3.

Protect and enhance the viability East Harlem's small businesses.

3.1
Amend existing zoning to permit additional commercial spaces on the second floor, provided that such commercial spaces do not displace rent controlled or rent stabilized apartments.

3.2
Amend existing zoning to limit the width of certain commercial spaces, which will preclude "big box" stores from moving into those locations in order to encourage small businesses. ●●

3.3
Provide multi-year funding to establish and sustain merchants' associations on East 116th Street and East 125th Street, with the ultimate goal of establishing a Business Improvement District (BID) if found to be warranted.

3.4
Increase funding for programs that provide assistance to local small businesses in consultation with the small businesses themselves.

3.5
Have SBS conduct a Commercial District Needs Assessment (CDNA) along the main commercial corridors in East Harlem.

4.

Increase overall economic activity in East Harlem.

4.1
Utilize zoning to encourage further development to bring in more businesses and business activity. Potential locations for development include East 125th Street, the NYCHA "superblocks" along the existing commercial corridors, Park Avenue, Madison Avenue and the Harlem River waterfront. Ensure that any waterfront development retains public access to the waterfront.

4.2
Bring NYCHA and NYCHA residents to the table and make sure that NYCHA's "NextGen" plans proceed only in a manner that is consistent with the priorities of the East Harlem Neighborhood Plan.

4.3
Create incentives such as the Department of Finance's Relocation and Employment Assistance (REAP) program and use organizations such as a merchant's association or BID if warranted to attract new types of businesses to open in East Harlem (e.g., hotels, movie theaters, cultural venues, bowling alley, business clothing stores).

4.4
Provide funding for a local group to encourage local businesses, non-profits and other organizations to purchase goods and services within East Harlem.

4.5
Take steps to enhance the safety and cleanliness of the commercial corridors by including better lighting, more waste receptacles and more frequent sanitation pick-ups.

5.

Attract more tourists and other visitors to East Harlem.

5.1
Add wayfinding signs to better assist visitors.

Additional tourism-related recommendation can be found in the Arts & Culture subgroup recommendations.

SMALL BUSINESSES, WORKFORCE & ECONOMIC DEVELOPMENT

(CONTINUED) OBJECTIVES & RECOMMENDATIONS

Additional Workforce Recommendations *

1
Improve job standards: Require recipients of public subsidies and city-owned property and properties requiring land use processes to commit to ensuring that all contractors and subcontractors working in East Harlem be participants in state or federally approved apprenticeship programs for the trades in which they perform work.

2
Improve job standards: Require building owners who receive public subsidies or whose buildings are constructed on city-owned property or property disposed by the city to pay prevailing wage for building service workers and living wages for other permanent workers.

3
Good quality job creation: Encourage developers and commercial tenants to commit to paying prevailing wage or living wage, whichever is the industry standard, for the permanent jobs and respecting workers' right to organize.

4 **
Facilitated hiring: Create a local hire intake center, run by a qualified community-based organization, to facilitate a city-wide local hire goal for rezoned communities. This would allow East Harlem residents to work in other rezoning areas and have residents of those areas work in East Harlem, thus drastically widening the long-term career employment opportunities rather than incentivizing short-term jobs.

* These four recommendations were not proposed or reviewed by the Small Businesses, Workforce & Economic Development subgroup, and instead came before the Steering Committee directly.

** Oppose: Union Settlement Association

PRECEDENTS

Bakers in Training at Hot Bread Kitchen
© John McCarten / New York City Council

La Marqueta

Located under the elevated Metro North railway tracks between 111th–119th Streets of Park Avenue, "La Marqueta" has served as a resource of iconic cultural heritage to the East Harlem community since its formation as an innovative public marketplace in 1936. In its heyday of the 1950s–60s, over 500 vendors operated out of the facility, providing a vital social, health, cultural and economic destination for Latinos and New Yorkers across the city. The market is currently home to several small vendors and the small business incubator Hot Bread Kitchen. Efforts to recapture the community benefit of the market include La Marqueta Retoña initiative, sponsored by the Speaker's office, bringing new life to the market by sponsoring regular cultural and culinary programming, live music events, weekly open air food markets, poetry nights and pop-up artisan vendors that have attracted hundreds of local residents and visitors each week. Recognizing this 21st century market must now have multiple policy goals, NYCEDC has partnered with Placeful, a local non-profit organization that fosters investment in community space through socially responsible partnerships, to redevelop the market and provide a greater variety of community benefits. In addition to retail sales of produce, prepared and unprepared foods and other goods, we anticipate additional local programs in health & nutrition, arts & culture, business incubation, and job training.

Amsterdam between 94th-95th Streets
© NYC Department of City Planning

Upper West Side storefront regulations
© NYC Department of City Planning

Upper West Side Special Enhanced Commercial District

Since 2012, the Special Upper West Side Enhanced Commercial District along the neighborhood's major avenues has preserved the diverse, small business character in the Upper West Side.[1] Extending along portions of Amsterdam, Columbus and Broadway Avenues, the District limits the size of storefronts to ensure that the blocks have a diversity of retail frontages and requires transparent storefronts to enliven views from the street. Together, these special district regulations protect the character of the Upper West Side's commercial corridors, stop the proliferation of large bank facades and protect the diverse retail frontages along the area's shopping corridors.

This precedent relates to Recommendation 3.2

1 http://www.nyc.gov/html/dcp/html/uws/index.shtml

Center for Job Training and Job Development Graduates at STRIVE International, 123rd St and 2nd Ave
Courtesy of STRIVE

East Harlem Talent Network

The East Harlem Talent Network was created through a collaboration between the East Harlem Community Alliance, STRIVE, the Upper Manhattan Empowerment Zone and Mt. Sinai Hospital, to build relationships with local employers and encourage local hiring. The Talent Network identifies local employers that understand the value of investing in their business by investing in the community they serve. The Talent Network also works to identify local quality, skilled candidates to screen and refer to local employers.

This precedent relates to Recommendation 2.1, 2.3

SMALL BUSINESSES, WORKFORCE & ECONOMIC DEVELOPMENT

COMMUNITY VISIONING WORKSHOP #5

Affordable Housing Development / Zoning & Land Use

October 22nd, 2015
6:30–8:30pm
at Dream Charter School
175 Participants

Additional Engagement:

Zoning and Density Trade-Offs Workshop
April 7th
at Community Voices Heard
31 Participants

Zoning Education Forum
September 30th
at P.S. 133 Fred R. Moore School
30 Participants

Zoning and Density Trade-Offs Workshop
October 20th
at Lincoln Houses
15 participants

Zoning and Density Trade-Offs Workshop
October 22nd
at Johnson Houses
10 participants

The fifth community visioning workshop was focused on Affordable Housing Development, led by Lott Community Development Corporation, and Zoning & Land Use, led by CIVITAS. Attendees participated in four different activities that facilitated in-depth topic discussions. The first mapping activity was used to identify places that participants liked and disliked within East Harlem. In addition, the conversation asked the group to highlight concerns and provide suggestions related to specific areas in the neighborhood. The second activity allowed participants to grapple with the trade-offs involved in the development of affordable housing on privately owned land and allowed participants to make decisions around the levels of housing affordability. The third activity was a survey of participant preferences for development on different types of publicly owned land. The fourth activity was a survey of priorities for community facilities that could come with both public and private development.

Additionally, four zoning education sessions were held, one led by the Manhattan Borough President's Office, and three led by the Center for Urban Pedagogy. These sessions were designed to be a primer for the Community Visioning Workshop to help inform participants in greater detail about zoning—how it works and what the trade-offs of increased density are.

54%

of Workshop Survey respondents said they'd take more buildings if those apartments are

AFFORDABLE for LOCAL RESIDENTS.

A copy of all workshop activities and responses, including this survey, can be found in the Appendix.

Affordable Housing Development

For the last 70 years, East Harlem has been a focal point for affordable housing in New York City. This housing stock, which includes public housing and other subsidized homes, needs to be protected. The preservation of existing affordable housing is a critical strategy, but there will continue to be a substantial number of homes that will fall out of subsidy programs every year. In addition, the need for affordable housing in East Harlem continues to grow. Participants in the community visioning workshop placed a tremendous emphasis on the creation of more affordable homes so long as the infrastructure and community resources are in place to manage the additional population and only if these homes are truly affordable to neighborhood residents.

1

1 Draper Hall under construction, Courtesy of Dattner Architects
2 Harlem RBI—Dream Charter © Sarah Mechling, Courtesy of Perkins Eastman.
3 El Barrio's Artspace PS109, containing 89 units of affordable live/work housing for artists © Kate Milford 2016

2

3

While East Harlem residents expressed wariness of the market pressures in the neighborhood, the area's current market strength can be leveraged to generate more affordable housing development. In addition, there are several public sites that could be transformed into new affordable housing with neighborhood amenities.

East Harlem, due to its history of affordable housing provision, also has considerable institutional capacity within the neighborhood to advocate for and pursue deeper affordability through innovative housing models. The East Harlem Neighborhood Plan seeks to utilize this capacity for both preservation and creation of affordable housing.

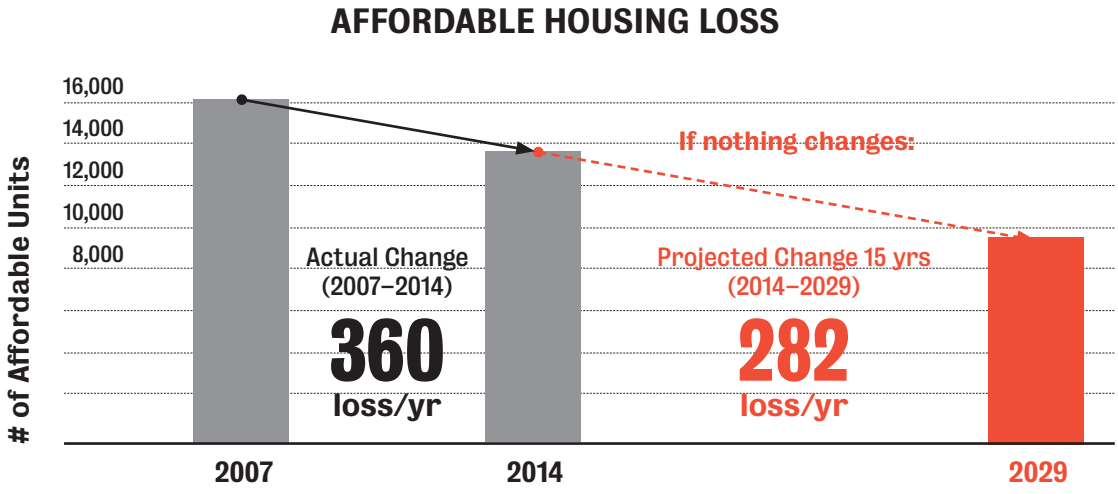

Without a rezoning that mandates that affordable units be built along with the added density, East Harlem will continue to see a loss of ~282 subsidized units/year due to expiring affordability programs.

Source: CB11 analysis, using RPA affordable housing database, John Krauss rent stabilization data, and NYC PLUTO database.

WAYS TO PRODUCE AFFORDABLE HOUSING

1. Rezoning of private sites
2. Developing publicly-owned sites with current or changed zoning
3. Developing on NYCHA land

WHAT IS AMI?

Housing affordability levels are based on a benchmark AREA MEDIAN INCOME (AMI). NYC AMI includes the five boroughs and some neighboring counties.

AMI is

$77,700

for a family of three.

Source: US Census, ACS, 2009–2013. Based on census tracts approximately within boundaries of CB11.

WHAT IS MANDATORY INCLUSIONARY HOUSING (MIH)?

Mayor de Blasio's administration has proposed an MIH program with two options that would be determined when a neighborhood goes through a rezoning. It would require private developers to provide affordable housing with any market rate development in a rezoned area.

EAST HARLEM AMI LEVELS

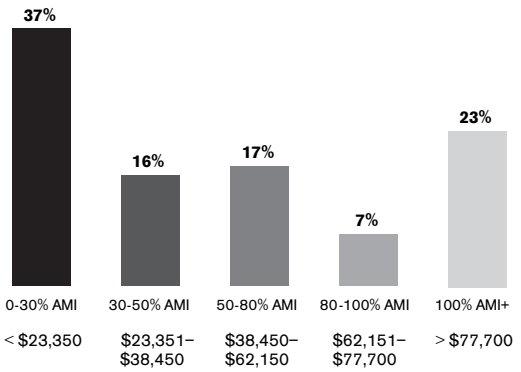

Source: US Census ACS 2007–2011 5 year estimates. Based on census tracts approximately within boundaries of CB11. Income limits are for a three-person household (HUD 2015)

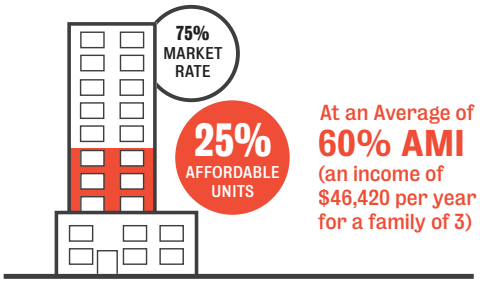

Proposed MIH Option 1

Less total affordable units but deeper affordability

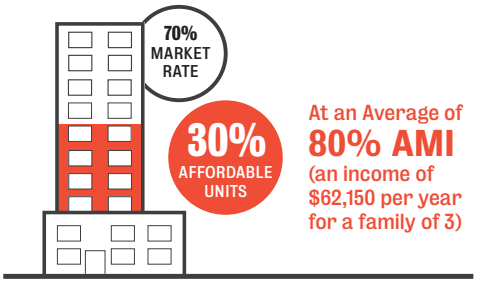

Proposed MIH Option 2

More total affordable units but with less affordability

Despite these considerable neighborhood assets, the community also faces some challenges around the development of affordable housing:

- While the neighborhood has a significant amount of existing affordable housing, there is still an important unmet need for more affordable places to live.
- On top of this, the neighborhood loses existing affordable housing every year as units fall out of rent stabilization and subsidy programs. East Harlem is expected to lose 282 affordable units on average per year between 2014 and 2029.
- Just as important as the actual number of affordable units is the level of affordability at which they are set. Affordable housing programs set the price of the unit based on New York City's area median income (AMI), which is not reflective of East Harlem's median household income. Affordable units that are to be built according to the City's Mandatory Inclusionary Housing (MIH) plan are not necessarily affordable to many existing residents.
- East Harlem is already becoming less affordable as the development of market rate units pushes up prices in the neighborhood. These new developments are typically not affordable to East Harlem's residents.
- The demand to establish higher rents can lead to the harassment of existing tenants and real estate market speculation, such as warehousing of vacant properties.
- Development and increased density without concurrent investment in infrastructure and neighborhood services can lead to overburdening when existing infrastructure is not able to handle the increased demands.

AFFORDABLE HOUSING NEED

In addition to affordable housing loss, our process looked at Total Severe Housing Need in East Harlem.

+	Entering Homeless Shelters	626
+	Households Severely Burdened by Housing Costs (Rent + Own)	10,616
+	1/2 of Severely Overcrowded Households (>1.5 persons per room)	758

We defined this need as:

= 12,000 Households

Sources: Homeless: Institute for Children, Poverty & Homelessness October 2014 Report; NYC Department of Homeless Services Daily Report, December 4, 2015 (Total Neighborhood Homeless Households = Family Entering Shlter by Neighborhood, 2014 / Ratio of total NYC Homeless Family Households to Total Households. Currently 53.3% of total Homeless Households are Family Households.) Rental Burden: 2014 ACS 5-Year Summary File B25070 Homeowner Burden: 2014 ACS 5-Year Summary File B25091 Overcrowding: 2014 ACS 5-Year Summary File B25014

OBJECTIVES & RECOMMENDATIONS

1.

Increase the amount of affordable housing with deep and varied levels of affordability in any new development.

1.1
The community's goal is to build off of the affordability that will be required on private rezoned sites under the MIH policy (proposed at 25% affordable housing at 60% AMI, or 30% at 80% AMI) with a recommendation of 100% affordable on public sites. These efforts combined will enable at least 50% of the new housing on private rezoned and public sites to be affordable at a variety of low- and moderate-income levels.

1.2
For the 50% affordable housing, establish targets of low and moderate AMI bands that relate to the neighborhood medians and establish a target that at least 20% of the affordable units are at or below 30% of AMI.

1.3
Ensure the enforcement of regulatory agreements that outline affordability requirements. Empower tenants and CBOs to be involved in such enforcement. Work with HPD to make regulatory agreements more accessible to the public, and provide annual reports to Community Board 11, City Council and the Manhattan Borough President's Office.

1.4
Assure permanent affordability in the units created through Mandatory Inclusionary Housing and developed on public sites.

1.5
Aim to achieve total new development of affordable housing that exceeds the estimated current loss of rent regulated housing (which projects forward to an approximate loss of 280 units per year for the next 15 years) and addresses a significant portion of the severe housing need documented in East Harlem, which includes the percent of the local population that is homeless, overcrowded, and severely rent burdened.

1.6
Establish a special district along portions of 3rd, 2nd and 1st Avenues that allows for a voluntary density bonus on top of (and in conjunction with) a potential rezoning with Mandatory Inclusionary Housing (MIH) so that greater levels of affordability can be reached. [This recommendation assumes a potential rezoning with MIH to R9 and a "bump-up" for the voluntary density bonus.] Consider application of this special district concept to portions of Madison, Lexington and Park Avenues. Additional study is needed to establish how much additional affordability can be built in and retain financial viability.

1.7
Study the establishment of a linkage between a potential voluntary density bonus and a policy on construction workforce that requires living wages, local hiring and certified apprenticeship programs.

1.8
Ensure that construction jobs for affordable housing production pay living wages, advance local hiring, and provide certified apprenticeship programs so that East Harlem residents can be ensured well-paying and safe work environments, with long-term career opportunities.

2.

Expand affordable housing tools and resources to increase affordable housing in new development.

2.1
Exclusively public sites that can be redeveloped, with or without a change in zoning designation, should be built with 100% affordable units, and these units should be required to reach deep and varied levels of affordability up to 130% of AMI, and to establish a target of at least 20% of the units at or below 30% of AMI. ●●

2.2
If residents decide that new infill development is appropriate for their NYCHA development, create additional affordable housing on available NYCHA sites in conjunction with active engagement with the development residents. (This recommendation relates to NYCHA Recommendation 5.1.)

2.3
Explore the potential for adaptive re-use, co-location and development of underutilized buildings for affordable housing and other community uses.

2.4
HPD should provide more affordable artist live/work spaces through its programs in East Harlem. Locate these spaces in appropriate areas as part of potential rezoning, such as along the Park Avenue viaduct (allow artist live/work housing to use commercial FAR should the area be rezoned).

2.5
Encourage HPD to work with the community to identify sites and funding to create more affordable housing for seniors.

2.6
Seek to create more supportive housing, and ensure that it is built in conjunction with experienced non-profit supportive housing providers for those groups most in need in the district, as identified by the Community Board.

2.7
Increase the amount of City subsidy available to reach deep levels of affordability.

2.8
For Requests for Proposals for public sites:
2.8.1 Require maximum and deep affordability.
2.8.2 Require permanent affordability strategies.
2.8.3 Require that developments meet community-defined program and design requirements, including those for open space and community facilities, and housing for the homeless.
2.8.4 Encourage that HPD require involvement of locally-based non-profit developers/owners.
2.8.5 Explore the potential for the conveyance of vacant and underutilized City-owned land to a community land trust.

2.9
Encourage private developers to work with the East Harlem community (non-profit developers, community-based organizations, service providers, the Community Board, et al) to ensure that all new developments meet community needs and priorities.

2.10
Make community preference in affordable housing a requirement of development in East Harlem.

3.
Implement tools to address displacement of residents and business owners.

3.1
Adopt anti-harassment measures to discourage the displacement East Harlem residents.

3.2
Discourage speculation and encourage community-centric development with an anti-warehousing policy, and an investor/purchaser transfer tax.

3.3
Encourage the leasing of ground-floor commercial space to local small business owners through coordinated outreach to landowners and landlords. Ensure that DCP, HPD, EDC and SBS coordinate efforts and resources to strengthen strategies for small business creation and retention along commercial corridors in East Harlem.

●● Related to case study on pages 88-89

PUBLIC SITE CASE STUDY

LAND OWNERSHIP IN EAST HARLEM

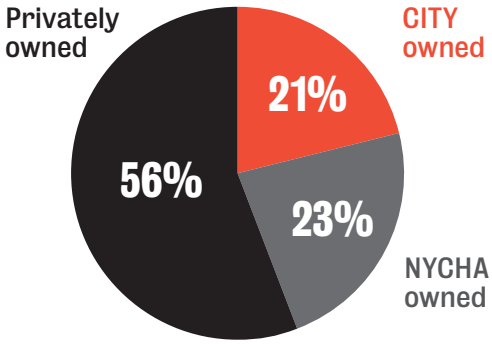

THE NEED FOR AFFORDABLE HOUSING IN EAST HARLEM IS LARGE

No single tool can produce all of the affordable housing that is needed in East Harlem. Many tools must work together, they include:

- Mandatory Inclusionary Housing (MIH)
- Density Bonus
- Subsidy
- Publicly-Owned Sites
- NYCHA Infill (should residents approve)

PUBLICLY-OWNED SITES

Building on publicly-owned sites can dramatically reduce the cost of developing affordable housing by reducing or eliminating the cost of land. The resulting reduced total development cost makes it possible for the project to include a greater total amount of affordable units and deeper levels of affordability.

- 100% affordable
- City can better control mix of uses, total affordable units and affordability levels

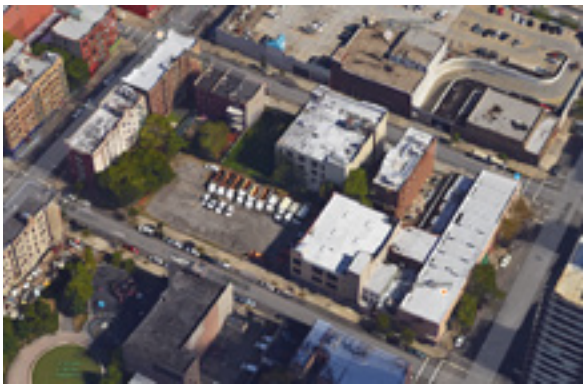

Bird's eye view of the Sanitation parking lot, Image courtesy of Google Maps

Sanitation Parking Lot 123rd Street + Lexington Avenue

This site is owned by the City of New York and is currently being used by the Department of Sanitation to park their trucks. This site is being used as a case study to illustrate what might be possible on City-owned sites. There are no currently known development plans for this particular site. The diagrams are meant to represent possible building configurations on the site—they are not meant to reflect any particular design.

SCENARIO MASSINGS
FOR SANITATION PARKING LOT

Option A:
R7-2 | As-of-right

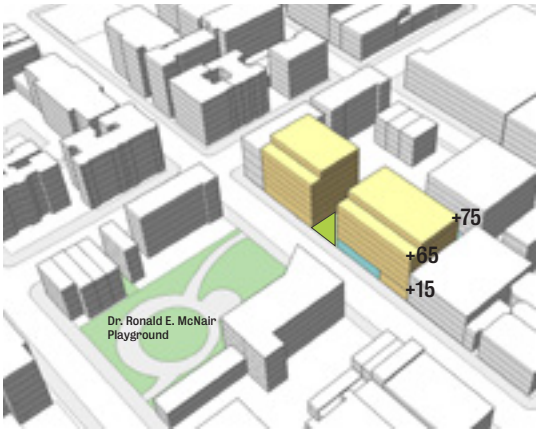

# of Apartments (100% affordable): 85
Commercial SF: 0
Community Facility SF: 7,750
Open Space SF: 4,040

Option B:
R8A MIH | Max. Affordable Housing

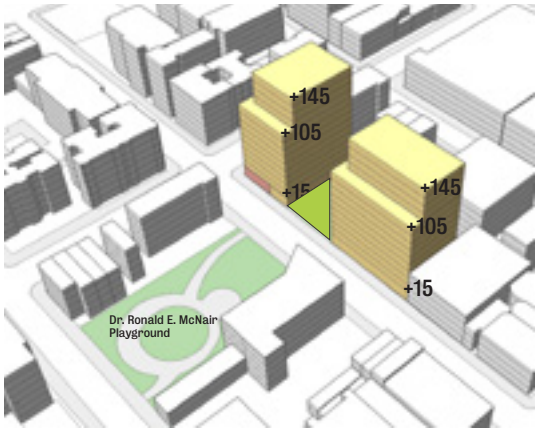

# of Apartments (100% affordable): 195
Commercial SF: 4,500
Community Facility SF: 0
Open Space SF: 7,300

Option C:
R8 MIH | Max. Community Facility

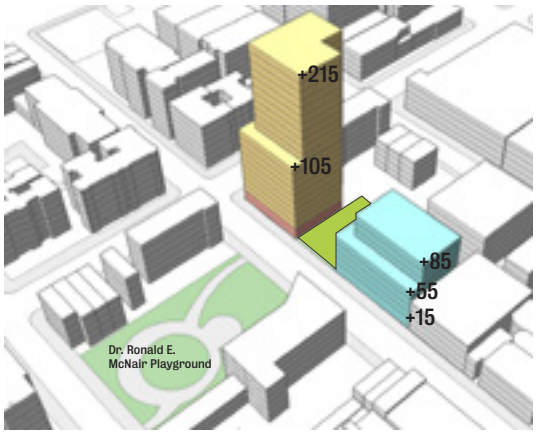

# of Apartments (100% affordable): 140
Commercial SF: 5,500
Community Facility SF: 54,100
Open Space SF: 6,400

Option D:
R8 MIH | Max. Open Space

of Apartments (100% affordable): 189
Commercial SF: 5,500
Community Facility SF: 5,500
Open Space SF: 15,400

1

2

Zoning & Land Use

Zoning sets requirements for every piece of land in the city. Land is divided into different types or "zones." Each zone has a specific set of rules that dictate how that land can be used and how much can be built upon it. A change in zoning can be done by the City to encourage new development, to alter the land uses as demand shifts, or to protect the character of areas. Currently, the City has proposed zoning that will require affordable housing where greater density is being encouraged, with specific rules detailing how much and where affordable

1 Underneath the Park Ave viaduct © C. Kelley 2015
2 Characteristic rowhouses on Lexington Avenue © Kate Milford 2016
3 Many new condo developments have been built in recent years in East Harlem. Google Maps.
4 A mixture of retail and smaller-scale residential development at 116th St and Lexington Ave © Kate Milford 2016
5 2nd Avenue in East Harlem remains relatively low-density compared its span in the Upper East Side © C. Kelley 2015

housing is built. This proposal, Mandatory Inclusionary Housing (MIH), would set requirements of 25% or 30% of the total new homes be affordable in areas that are being rezoned. Without the introduction of this policy, developers have no obligation to provide new affordable units. As the previous section on Affordable Housing has indicated, there is ongoing development in East Harlem with an increasing loss in recent years of affordable homes.

East Harlem is rich in places that residents value—community gardens, historic buildings, walkable streets and other neighborhood landmarks. In addition, East Harlem has a considerable amount of affordable housing, with almost 80% of the homes in East Harlem being rent-regulated in some fashion.

3

4

5

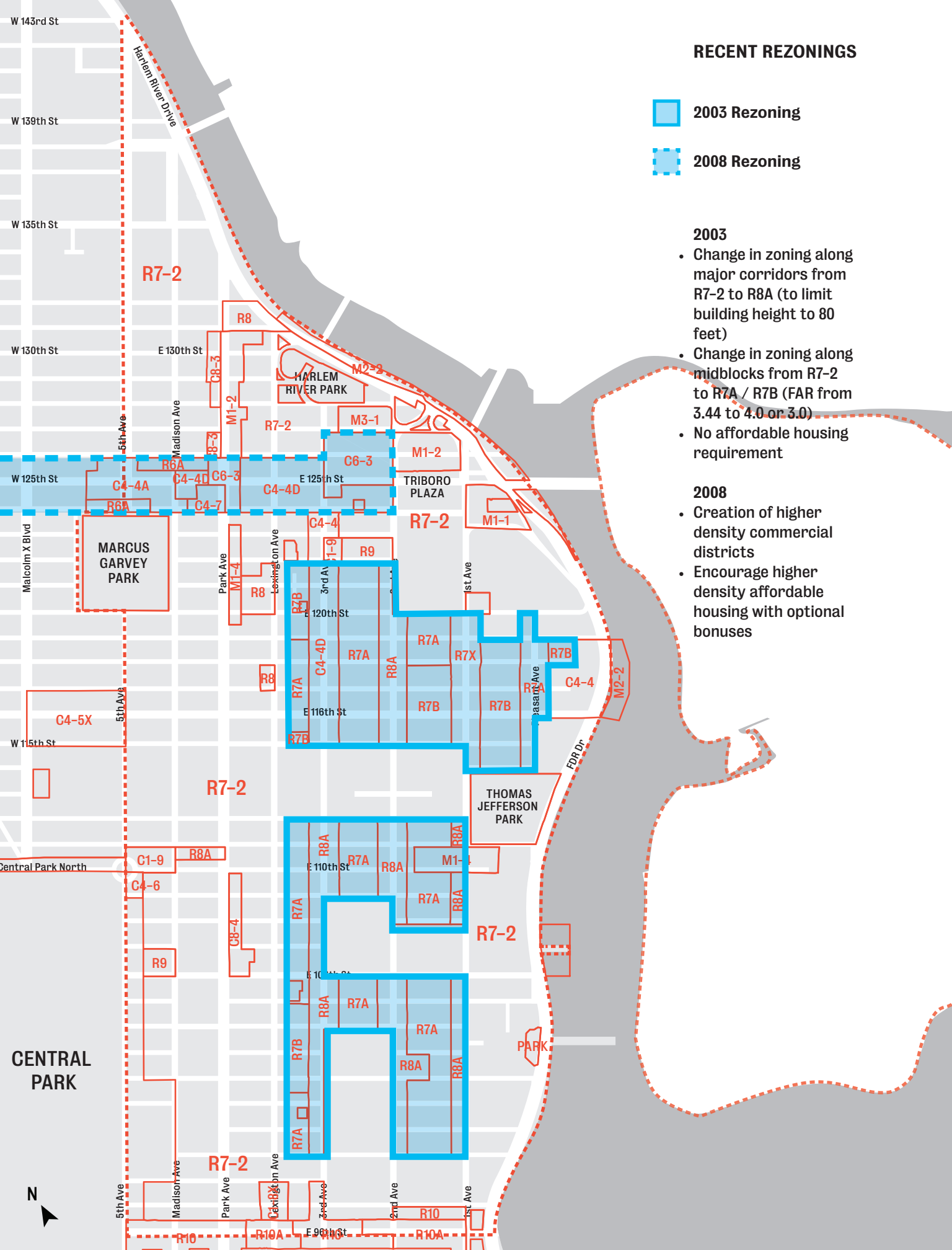
RECENT REZONINGS
2003 Rezoning
2008 Rezoning
2003
• Change in zoning along major corridors from R7-2 to R8A (to limit building height to 80 feet)
• Change in zoning along midblocks from R7-2 to R7A / R7B (FAR from 3.44 to 4.0 or 3.0)
• No affordable housing requirement
2008
• Creation of higher density commercial districts
• Encourage higher density affordable housing with optional bonuses
W 143rd St
W 139th St
W 135th St
W 130th St
E 130th St
W 125th St
E 125th St
E 120th St
E 116th St
W 115th St
E 110th St
E 96th St
Central Park North
Malcolm X Blvd
5th Ave
Madison Ave
Park Ave
Lexington Ave
3rd Ave
2nd Ave
1st Ave
Pleasant Ave
Harlem River Drive
FDR Dr
HARLEM RIVER PARK
MARCUS GARVEY PARK
TRIBORO PLAZA
THOMAS JEFFERSON PARK
CENTRAL PARK
PARK
R7-2
R8
R6A
C4-4A
C4-4D
C6-3
C4-7
C8-3
M1-2
M3-1
M2-3
M1-1
C4-4
R9
R7B
R7A
R8A
R7X
C4-5X
C1-9
C4-6
C8-4
M1-4
M2-2
R10
R10A
N

The community visioning workshop collected clear feedback that residents would accept increased density in appropriate locations in exchange for real, varied and deep affordable housing. As the neighborhood evolves, residents also want to ensure they will continue to have the services and amenities they value. The workshop made clear that increased density should be encouraged in areas where it is most appropriate, such as wide corridors and near subway stations.

The 2013 Park Avenue rezoning study conducted by CB11 and CIVITAS illustrates how zoning can help address a broad set of neighborhood challenges. The study proposed using zoning to activate the area along the viaduct, transforming it into a mixed-use corridor with new activity. The plan also proposed an early precursor to the current MIH program by requiring new development in Inclusionary Housing districts to include affordable housing at varied levels of affordability. The proposal received widespread support, and the community felt that this proposal needed to be re-engaged.

Below are the challenges that have been cited in relation to considering rezoning in East Harlem:

- While zoning must allow for new affordable housing development, this increased density presents a potential threat to the existing neighborhood. Zoning should only allow density in places that are able to accommodate it and should protect the neighborhood character and specific important structures in other areas.

- Neighborhood change, new development and added density can put a strain on existing infrastructure, exacerbating East Harlem's need for more amenities and services—schools, community facilities, transportation and others—to serve a growing population.

- Zoning must allow for new development that is affordable to residents and balances any market rate development with new affordable homes. Otherwise, it could reinforce displacement.

TARGETED REZONING AREAS

- Potential rezoning areas were identified in order to test their capacity to produce housing units over a 15-year period. Areas selected included portions of the wide commercial corridors, including a section of Park Avenue proposed by CB11 for rezoning in 2013, and sizeable publicly-owned lots.

- The areas selected largely avoided lots with existing residential units. Underbuilt lots were considered where built FAR divided by the zoned maximum FAR equaled 50% or less. Low-use lots such as parking lots, vacant lots and underbuilt or obsolete non-residential lots were considered. Playgrounds and urban gardens were avoided.

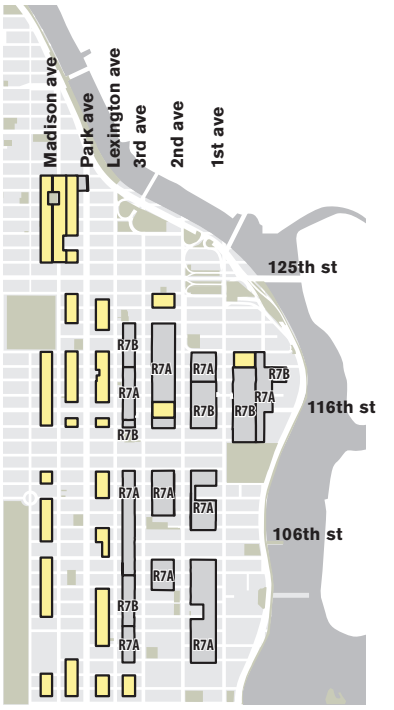

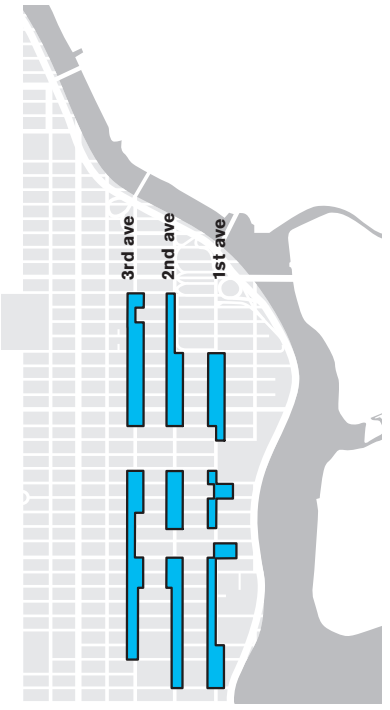

Recommended Preservation zoning

Previously rezoned preservation zoning

Recommended Upzoning

Recommended Upzoning

A. Preservation zoning districts

- Contextual zoning (R7A or lower contextual districts) to preserve areas with unique local characters such as building heights, facades and ground floor activities

B. Portions of 1st, 2nd and 3rd Avenues from R8A to R9A or R9

- Rezoning on widest commercial avenues
- Minimum upzoning to trigger Mandatory Inclusionary Housing
- Potential for 350 total units per year

C. Park Avenue between 115th and 132nd Streets

- Make better use of space next to the viaduct
- Mixed use zoning to create commercial and/or light industrial space, and to trigger Mandatory Inclusionary Housing
- Potential for 90 total units per year

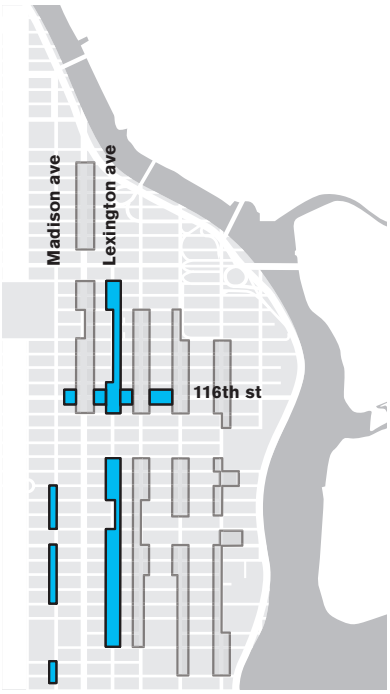

Recommended Upzoning

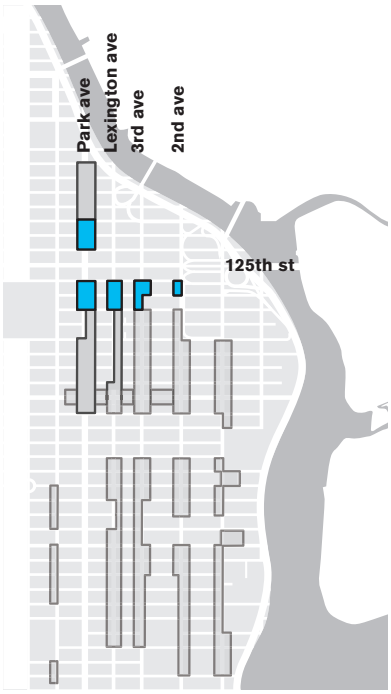

Recommended Upzoning

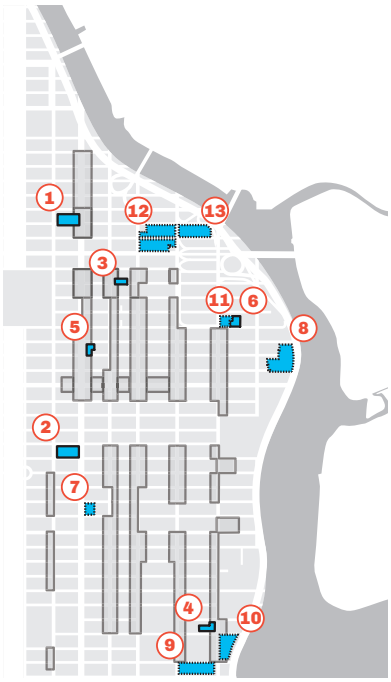

Public Sites

Pipeline Sites

D. Portions of Lexington and Madison Avenues and 116th Street

- The minimum upzoning needed to trigger Mandatory Inclusionary Housing is from R7-2 to R7D f or Lexington Ave. & 116th St. and require ground floor commercial uses
- Upzoning from R7-2 to R8 or R8A on Madison Ave
- Potential for 100 total units per year

E. Transit-oriented zoning districts

- Create high density and mixed uses around the MetroNorth Station, 125th St Lexington Ave line stop and the future 2nd Avenue Subway Terminus
- Rezone Park Ave. from 122nd to 124th Street, and 126th to 128th Street to C6-2 or C6-3D, which are commercial equivalents of R8 and R9D.
- Rezone Lexington Ave. from 122nd Street to 124th Street to R7D or C4-4D (R8A equivalent).
- Rezone 3rd Ave. from 122nd to 124th Street, excluding Taino Towers area, to C6-3 or C6-4, the residential equivalents of which are R9 and R10.
- Rezone west side of 2nd Ave. from 123rd to 124th Street, to a combination of C6-3 and C6-4.

F1. Public Sites (R8A/R10)

1 Urban Assembly School
2 111th-112th Block
3 Sanitation Parking Lot
4 District 11 Sanitation Lot
5 Police Station Parking Lot
6 HRA East Harlem Multi-Service Ctr

- The public sites have not yet been approved for redevelopment
- Proposed rezoning, such as R8A on narrower streets and R10 on wider streets with 100% affordable units

F2. Pipeline Sites

7 Lexington Gardens
8 East River Plaza
9 Coop Tech
10 Draper Hall Ph 1 & 2
11 La Promesa Ph 1
12 MEC – East 125 St Development
13 East 126 Street Bus Depot

- Pipleline sites are areas that the City is also working toward developing, with agreed plans for the sites.

There is a potential for 400 total units per year on public and pipeline sites.

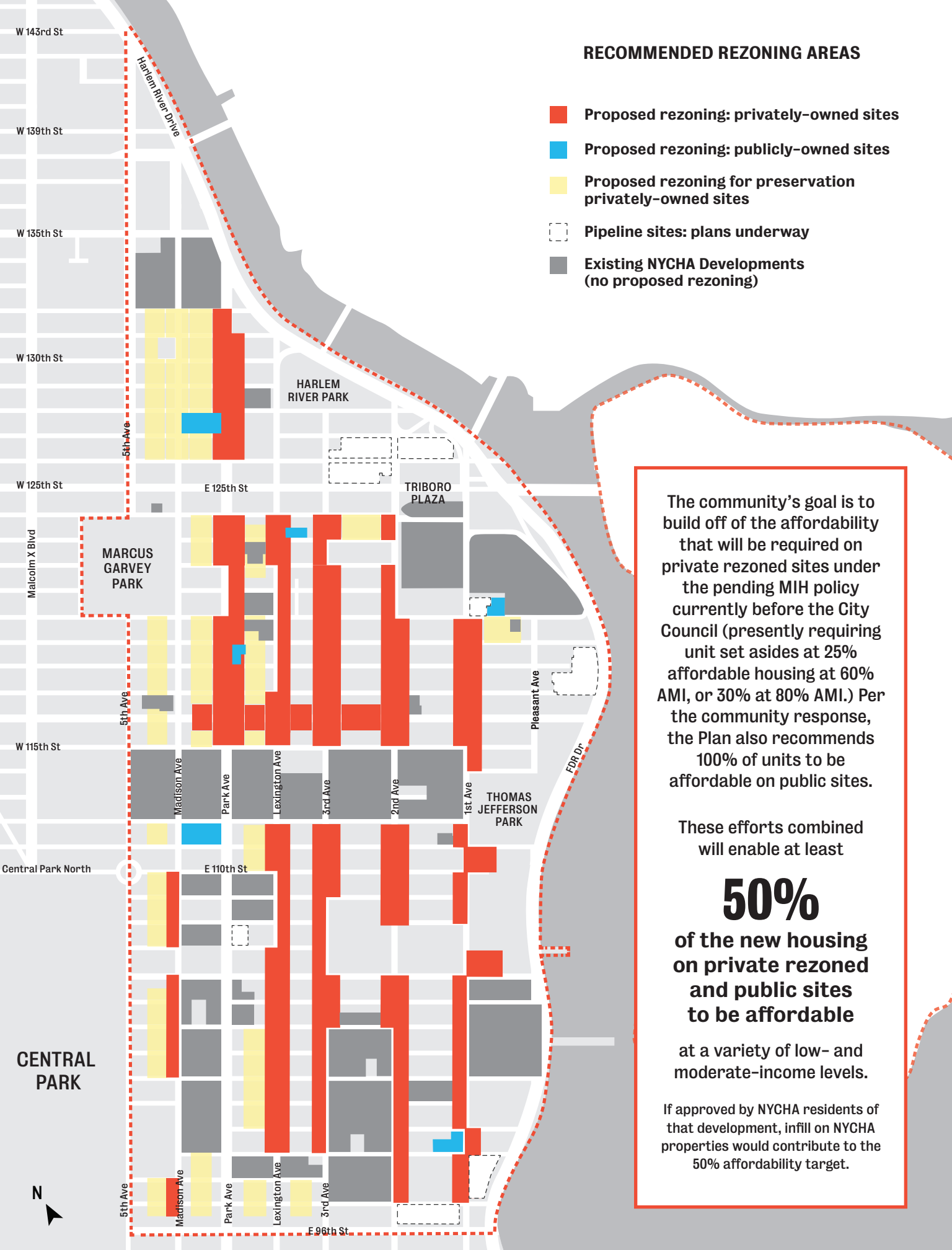

The community's goal is to build off of the affordability that will be required on private rezoned sites under the pending MIH policy currently before the City Council (presently requiring unit set asides at 25% affordable housing at 60% AMI, or 30% at 80% AMI.) Per the community response, the Plan also recommends 100% of units to be affordable on public sites.

These efforts combined will enable at least

50%

of the new housing on private rezoned and public sites to be affordable

at a variety of low- and moderate-income levels.

If approved by NYCHA residents of that development, infill on NYCHA properties would contribute to the 50% affordability target.

PARK AVENUE BETWEEN 115TH AND 132ND STREETS

Make better use of space next to the viaduct by upzoning to include light industrial and commercial spaces on at least the first three stories and to trigger Mandatory Inclusionary Housing for the residential stories above. This would allow uses that are less likely to be disturbed by the viaduct noise, like commercial food preparation facilities, and artist live/work spaces.

M1-6/R8 (MIH)
10 FAR / 7.2 FAR

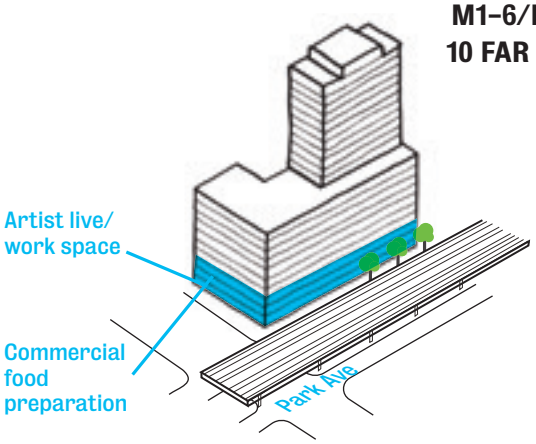

PORTIONS OF 1ST, 2ND AND 3RD AVENUES NORTH OF 115TH ST AND SOUTH OF 112TH ST

On 1st, 2nd, and 3rd Avenues, the widest commercial avenues in the neighborhood, the recommendation is to rezone to the minimum upzoning required to trigger MIH, which is from R8A to R9A or R9.

R9 (MIH)
8 FAR

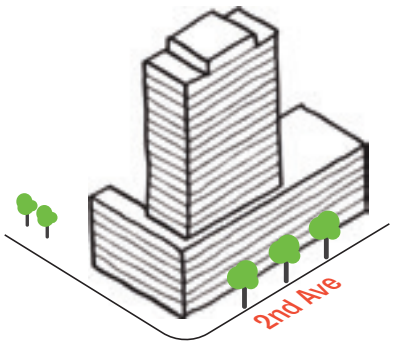

PORTIONS OF LEXINGTON AVE AND 116TH ST

On portions of Lexington Ave. and portions of 116th St., the recommendation is to rezone to the minimum upzoning required to trigger MIH, which is from R7-2 to R7D. This designation would require ground floor commercial uses.

R7D (MIH)
5.6 FAR

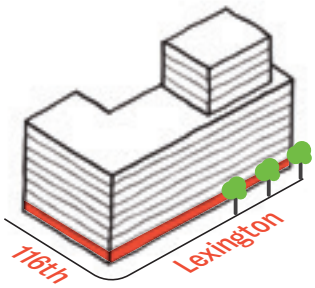

PORTIONS OF MADISON AVE

On portions of Madison Ave., the recommendation is to upzone from R7-2 to R8 or R8A

R8A (MIH)
7.2 FAR

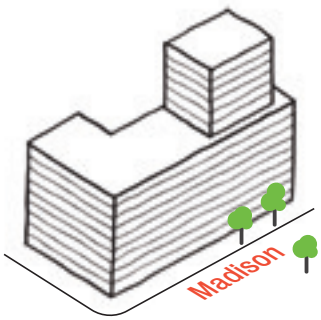

OBJECTIVES & RECOMMENDATIONS

1.

Preserve important East Harlem buildings and reinforce neighborhood character.

1.1
Preserve areas with unique East Harlem neighborhood characteristics through rezoning, such as 116th Street east of 3rd Avenue, Madison Avenue between 126th and 132nd Streets, and midblock areas. The subgroup discussed indicators of significant neighborhood character, such as particular façade treatments/colors, architectural style, design of midblocks including building entries, neighborhood gardens, ground floor activities and storefronts, skyline, and locations where important historical and cultural events took place.

1.2
Protect buildings and sites with significant local and cultural heritage by considering landmark status or ensuring they are rezoned into preservation districts. This will depend on context and neighboring zoning. Buildings and sites for consideration for local heritage or landmark status include the Cosmo Theater (116th Street), the building featuring the Zapatista mural (117th Street), the building featuring De La Vega's homage to Picasso (111th Street), the Casa Latina Music Store (116th Street), the 1st Spanish Methodist Church (111th Street), La Marqueta, Harlem's Colonial African Burial Ground Sacred Site, Public Housing, and others.

1.3
Study the creation of historic districts in areas such as Pleasant Avenue, 116th Street east of Park Ave., the corner of 106th and Lexington Avenue, and Pleasant Village (along E. 119th Street between 1st Avenue and Pleasant Avenue).

1.4
Redefine the Transit Land Use Special District, which was mapped in 1973 along 2nd Avenue and has remained unchanged since. In addition to adjusting their current locations to reflect the current Second Avenue Subway station plan, the Special District itself should be rewritten to include the following:

1.4.1
Urban design guidelines to ensure that sidewalks are unobstructed for larger pedestrian flows and that built form enhances local character.

1.4.2
Incentivize connectivity to help manage future pedestrian flows. Encourage new buildings to connect directly to new subway stations where possible, promote seamless underground connections between existing and new subway lines and between subways and MNR lines, and address connections to express buses.

1.4.3
Evaluate the potential for creating a mechanism around the 125th Street intermodal hub that would capture value from significantly greater density to be used for improvements to the historic station, station plaza, and public space, street, and under-viaduct areas within close proximity to the hub.

1.4.4
Incentivize opportunities for mixed-use development along 125th Street that incorporates requisite 2nd Avenue Subway infrastructure, including vent shafts, entrances, exits, passageways, etc.

2.

Allow for increased density in select places to create more affordable housing and spaces for jobs.

(See pages 92-93 for more details)

2.1
A rezoning to create more affordable housing should consider the widest avenues (3rd, 2nd and 1st Avenues) for increased density. Potential zoning districts discussed through this planning process include the commercial equivalents to R9 or R9A to trigger MIH.

2.2
A rezoning to create more commercial and/or light industrial space should consider Park Avenue between 115th and 132nd Streets due to the street's proximity to the rail viaduct. One potential zoning designation discussed through this planning process is an option that considers a 7.2 FAR non-residential district paired with an R7-2 MIH district of 4.6 FAR, which would leave 2.6 FAR for non-residential uses at the base of a building.* Another option discussed considers an M1-6 district (10 FAR) with an R8 MIH district (7.2 FAR), which keeps total FAR limited to 10 and would keep the difference between non-residential and residential FAR below 3 FAR.

(This option acknowledges that the 7.2 FAR non-residential zone does not currently exist and either a new district or the language of the special district would need to be designed to accommodate this pairing of FARs.)

2.3
A rezoning should consider higher density commercial districts around the Metro-North Station, the 125th Street Lexington Avenue line express stop, and future 2nd Avenue subway terminus in the area outside the 125th Street Special district. Specifically:

2.3.1
Park Avenue from 122nd Street to 124th Street, and from 126th Street to 128th Street, currently zoned as C8-3, M1-2, M1-4, and R7-2. The potential zoning districts discussed during the planning process were C6-2 and C6-3D, which are commercial equivalents of R8 and R9D.

2.3.2
Lexington from 122nd Street to 124th Street. R7D was discussed for most of the length of Lexington Ave. south of 124th Street, but C4-4D (R8A equivalent) was discussed as an option for the portion from 122nd Street to 124th Street.

2.3.3 *
3rd Avenue from 122nd Street to 124th Street, excluding the Taino Towers portion of that area, is currently zoned as C4-4, but considering transit access and the existing large-scale Taino Towers, this area was discussed for C6-3 or C6-4, the residential equivalents of which are R9 and R10.

2.3.4 *
2nd Avenue from 123rd Street to 124th Street, west side of street, currently zoned as R7-2 was also discussed for C6-3 and C6-4 due to its proximity to Taino Towers and transportation access.

2.4 *
A rezoning should target the west side of Madison Ave. between 107th and 110th Streets, 102nd and 106th Streets and 96th to 98th Streets. Much of lower Madison Avenue is currently lined with large institutional or height factor buildings. The targeted areas are generally the portions of lower Madison with less intense uses, which can accommodate more intense uses than the current R7-2 allows. The zoning districts discussed through this planning process were R8 or R8A. This portion of Madison Ave. is about 80 feet wide and large enough to accommodate 7.2 FAR.

* Oppose: Community Voices Heard

(CONTINUED) OBJECTIVES & RECOMMENDATIONS

2.5
A rezoning should target Lexington Ave. between 115th and 124th Streets, and 98th and 112th Streets. At only 75 feet wide, Lexington is not an appropriate location for much more intense uses than the current R7-2 zoning allows. With an intact and vibrant commercial character along portions of the Avenue, an R7D mapped with a commercial overlay would require commercial uses in the base of new buildings, reinforcing Lexington Avenue's character. Along with R7D, other zoning districts discussed through this planning process were R8 or R8A. R7D allows an FAR of 5.6. R8 or R8A allow FARs of 7.2.

2.6
A rezoning should target the midblocks of 116th Street from Madison to 3rd Avenue, which at 100 feet wide is an appropriate place for increased density. Currently zoned R7-2 and R7A with commercial overlays, an upzoning that would better suit its current character is an R7D district with a commercial overlay that would require ground floor commercial uses and allow buildings at 5.6 FAR. This district should protect the character of the street with a height limit, and ensure active ground-floor uses in keeping with the existing character of the street. The eastern portion of 116th was remapped in 2003 as a preservation district (R7B), and no changes should be considered in that area.

2.7
Further study is required for the potential for zoning alterations along lower Park Avenue south of 112th Street, where the stone viaduct presents a unique urban design condition.

2.8
Further study is required for the potential for a contextual zoning designation along 5th Avenue north of 111th Street to 142nd Street, with consideration for both sides of the avenue.

2.9
Existing height factor housing developments have been excluded from most zoning recommendations. This exclusion is not an endorsement of the existing "tower-in-the-park" zoning. As with lower Park Avenue and upper Fifth Avenue, further study is required for these areas.

2.10
Other city-owned public sites that are potential redevelopment sites for affordable housing should be developed at higher densities, such as R8A on narrower streets and R10 on wider streets.

2.11
Any potential rezoning should eliminate minimum parking requirements.

3.

Improve and create more services and amenities for the East Harlem community through any new development on private and public sites.

3.1
Create an Enhanced Commercial District on portions of 3rd, 2nd and 1st Avenues which would require: that the first 30 feet of ground floor frontage in new development be for commercial or community uses; that at least 50% of the ground floor frontage be occupied by retail uses; that residential lobbies be limited to 25-foot frontage widths; that curb cuts would be limited to side streets to maintain safe and vibrant sidewalks; and that 50% of the frontage on the avenues be transparent.

3.2
Require the Department of City Planning, the Department of Education, ACS and School Construction Authority to adequately project the impacts of new development on school seat requirements and establish opportunities for new early childhood education and school facilities to be built in the base of new developments. Approaches for making student projections should include detailed analysis, such as the clear definition of school building capacities based on current surveys. Require coordination around and appropriate timing of development of school facilities as units are developed.

3.3
Leverage any potential rezoning to replace aging and inadequate school facilities with new facilities developed at the base of new developments and the redevelopment of the aging school sites for new affordable housing and financing of the new school facility.

3.4
Require that community facilities, including early childhood education, afterschool, community space, artist space, and workforce training centers do not count towards FAR in order to encourage the creation of these spaces, such as through a special district mechanism.

- Institute a height cap, FAR limit or discretionary permit requirement to ensure community facility spaces do not exceed a certain size.
- Require developers to create a plan that establishes the link between community needs and community facilities created through a combination of analysis and community-based feedback (including a recent district needs assessment and community surveys)
- Require that these community facilities be built in advance of the construction of a majority of the associated units.

3.5
Establish an East Harlem Garden District that would create public and programmed community gardens that would support youth and senior activities as part of a potential rezoning and approach to open space.
[A potential subdistrict area could cover the area between Park and Pleasant Avenues, between 111th and 120th Streets where there is already a significant density of community gardens.] ●●

3.6
Require that East Harlem infrastructure—including power, telephone, sewer, and water—be upgraded to improve the basic functioning and connectivity of the existing community and for any future population increase.

●● Related to precedent on page 101

PRECEDENT

Lyric Theater by Flickr user ensign_beedrill

Theater Subdistrict Core of the Midtown Special District

The Theater Subdistrict Core of the Midtown Special District allows the transfer of floor area from landmarked Broadway Theaters to receiver sites in other parts of the district. The Transfer of Development Rights (TDR) harnesses the development rights of land that a city wishes to keep undeveloped and allows that floor area to be transferred so that development can occur in another location. These transfers allow for the preservation of open spaces and historic landmarks, while allowing urban areas to expand and increase in density. The TDR concept utilized in the Theater Subdistrict Core is similar to several others in New York City—East Midtown Subdistrict, West Chelsea Special District, South Street Seaport Subdistrict and Section 74-79 of the zoning resolution that allows the transfer of floor area from Landmarks. The Zoning & Land Use subgroup recommendation to establish an East Harlem Garden District (3.5), as well as the Arts & Culture subgroup recommendation to create a Theatre District (6.1) could take elements of the TDR approach used in Midtown.

This precedent informs the concept of an East Harlem Garden District (Recommendation 3.5)

COMMUNITY VISIONING WORKSHOP #6

Transportation, Environment & Energy / Safety / Health & Seniors

November 21st, 2015
10am–1pm

at New York Academy of Medicine

83 Participants

"I am concerned that many EH residents will no longer be able to afford fruits/veg/healthy foods when high income families and expensive stores move into the neighborhood."

From EHNP survey respondents

The sixth and final Community Visioning Workshop focused on Health & Seniors, led by New York Academy of Medicine; Transportation, Environment & Energy, led by WE ACT; and Safety, led by Office of City Council Speaker Melissa Mark-Viverito. All small groups participated in a mapping activity that focused on site-specific questions relating to all the different topics: for example, how people get around the neighborhood, where people have difficulty navigating and where people feel safe or unsafe. Then, half the small groups had more conversations about Safety, Transportation, Environment, and Energy. They discussed topics like violent crime, policing and alternatives to policing, youth engagement, air quality, improving pedestrian safety and creating a more resilient neighborhood in the face of climate change. The other half of the groups participated in more in-depth activities about Health & Seniors that dealt with understanding the social determinants of health and designing a healthier and more accessible built environment by looking specifically at grocery stores and public spaces.

1

The community workshop and the subgroup meetings emphasized ways of exploring the links between transportation needs, the energy demands of transportation and East Harlem homes and the growing demand for the neighborhood to become more resilient.

Transportation,

2

3

4

5

1 Ward's/Randall's Island Bridge © Amaury Laporte
2 Corner of 116th St and Lexington © John McCarten / New York City Council
3 2nd Avenue Subway 96th Street Entrance Rendering, Courtesy of MTA Capital Construction
4 125th St and Park Ave, Courtesy of WXY
5 Second Avenue Subway Tunnel at 86th St, Courtesy of MTA

East Harlem is a well-connected neighborhood, which means that the reliance on public transportation is helpful for reducing carbon emissions. Residents can choose from a number of existing transit options including bus, subway and Metro-North rail. The connectedness of the neighborhood is going to increase further as planned developments come online in the next few years. MTA is designing the second phase of the 2nd Avenue subway line, which will pass through East Harlem, and CitiBike has plans to expand its service area northward to 125th Street.

Environment & Energy

72%

East Harlem residents

56%

city-wide residents

commute to work by public transportation

Source: Census ACS 3-year 2013

Ridership at Harlem–125th Street station rose

55%

between 2002 and 2013,

much of which included reverse commuters—city residents accessing jobs in the suburbs

Source: NYCEDC

LOCATION OF SECOND AVENUE SUBWAY STOPS

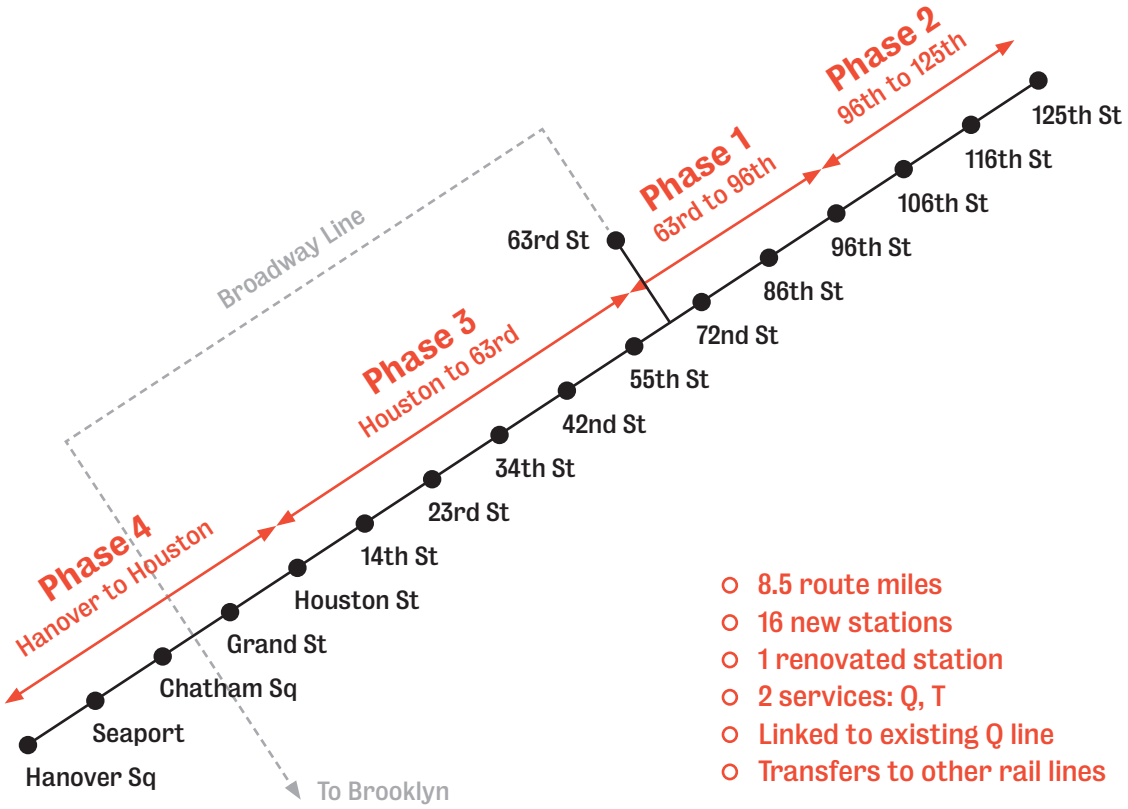

- 8.5 route miles
- 16 new stations
- 1 renovated station
- 2 services: Q, T
- Linked to existing Q line
- Transfers to other rail lines

The area can do more to improve the local environment and to mitigate climate change through a cultivation of renewable energy sources that encourage resiliency. Listed below are some broad challenges facing East Harlem:

- While East Harlem has strong transportation links to the rest of the City and wider metropolitan areas, crosstown traffic is difficult and the buses are slow and overcrowded.

- Street design improvements are needed to reduce sidewalk congestion and improve pedestrian and bicyclist safety. These design improvements are particularly vital so seniors and visually impaired residents can use the streets safely.

- East Harlem has some of the poorest air quality in the city, resulting in air quality problems that contribute to local health problems. These issues are exacerbated by vehicular congestion along the major avenues and 125th Street.

- Reducing congestion will also help address the need to reduce carbon emissions. With large areas of the neighborhood existing within the flood plain, East Harlem must prepare itself for climate change adaptation, particularly from rising waters and storm surges.

- The neighborhood has poor access to Randall's Island, a major open space asset for the community, and other open spaces along the waterfront. Improving connectivity to Randall's Island would significantly increase the amount of easily accessible open space for residents.

OBJECTIVES & RECOMMENDATIONS

1.

Capitalize on the planned implementation of the Second Avenue Subway and improve the ability of East Harlem public transit users to access jobs, services, cultural facilities and educational opportunities.

1.1
Create a multi-modal transit hub that connects between the Second Ave Subway (SAS), the 125th Street MetroNorth Station and the Lexington Ave Line, which also considers buses and taxis. Incorporate this hub and connection as part of the SAS Phase 2 Design Process through a dedicated community engagement session that leads to design guidelines for the physical connections.

1.2
Ensure that there is engagement with business owners who will be impacted by future Second Ave Subway (SAS) construction to limit displacement and loss of business.

2.

Improve the mobility of seniors and the visually impaired with increased and dedicated public transit options and streetscape infrastructure.

2.1
Conduct a service assessment and survey of Access-A-Ride to identify issues and develop solutions to improve wait times and provide on-time service. Potential solutions for improving service may extend beyond more funding, such as to resolving issues around how MTA contracts its vehicles, an improved voucher system, and ride-sharing.

2.2
Identify funding to install bus shelters on 5th Avenue along its entire length in the district, prioritizing the installation of shelters along Central Park. (This may require working with residents and the Central Park Conservancy around issues of historic character and appropriate design.)

2.3
Locate CityBench program installations in areas that provide respite for seniors, along NYCHA developments, commercial and cross-town corridors, and near Naturally Occurring Retirement Communities like Franklin Plaza. Coordinate locations with the District Public Health Office's proposed walking trail and other cultural wayfinding initiatives.

2.4
Address safe access for the visually impaired via the piloting of the Vision Enhancement Community Project (VECOMP) in key areas including 125th St, 116th St, 5th Ave and Madison Ave; adjacent to Mount Sinai and Metropolitan Hospitals; and areas around senior center locations throughout CB11.

3.

Increase overall pedestrian safety within CB11.

3.1
Require DOT and MTA to jointly conduct a comprehensive study of the Park Avenue Viaduct running from 102nd Street to the Harlem River Drive, with a primary focus on pedestrian safety.

3.2
Fund a study of DOT's Safe Routes to School (SRTS) program at all school sites in East Harlem, and implement where possible.

3.3
Improve connectivity of bike paths in the northeast corner of the district (between 124th and 127th, along both 2nd and 1st Avenues).

4.

Improve air quality in East Harlem by reducing congestion and mitigating vehicular emissions.

4.1
Institute a pilot enforcement program to reduce congestion at key intersections and along key commercial corridors. Reduce vehicular idling (school buses, trash trucks, taxis, double-parkers).

4.2
Modify parking and loading/unloading regulations (such as via implementing rush hour regulations) along 125th St. between 1st Avenue and 5th Avenue, with the purpose of speeding up cross town bus times and improving air quality. Establish a similar set of recommendations for commercial deliveries to improve the efficiency of commercial truck traffic along East Harlem's other primary commercial corridors (116th Street, 106th Street, Lexington Avenue, and 3rd Avenue).

4.3
When bus or sanitation depots are redeveloped within East Harlem, require that new buildings meet or exceed LEED Gold standards.

4.4
Encourage passive building design standards in the rezoning area and develop incentives for developers to pursue passive building construction.

4.5
Relocate the M10 Sanitation Garage at 110 East 131st St. (at the intersection of Lexington & Park Ave) to a more suitable location within Community Board 10. The M10 Garage only serves residents of CB10, but is located within CB11.

4.6
Relocate the existing M11 Sanitation Garage from 343 East 99th St. (between 1st & 2nd Ave, where it is adjacent to both healthcare and residential uses), to a more suitable location.

5.

Improve the energy resiliency and independence of East Harlem residents by increasing access to non-fossil fuel based renewable energy.

5.1
Explore the possibility of incorporating a special zoning district to allow for the generation of non-fossil fuel renewable power for community use and sale back to the grid as a revenue generator, to facilitate the development of a microgrid.

5.2
Pilot a microgrid initiative at NYCHA's East River Houses and Metro North Plaza, Metropolitan Hospital, and several schools in the south-east part of the district.

5.3
Working in consultation with both NYCHA and NYCHA residents, develop and install energy storage infrastructure on NYCHA property (within a microgrid pilot area) to facilitate the following objectives: 1) greater resiliency and reliability in the event of a blackout; 2) the reduction of the need for dirty peaker plant energy; and 3) generate revenue for NYCHA. The batteries can be used to store energy from off-shore wind facilities, with power purchased through the NYC Bulk Transmission System. Study the feasibility of siting enough storage infrastructure to reach 30mW of energy storage capacity.

6.

Reduce waste generated in East Harlem and improve the effectiveness of sanitation operations in commercial corridors in East Harlem.

6.1
Improve sanitation along commercial corridors in East Harlem by installing more waste receptacles and providing more frequent sanitation pick-ups.

6.2
Set up a demonstration project in East Harlem NYCHA developments to evaluate NYCHA Recycles! Program and NYCHA resident-driven recycling initiatives.

1

Safety

2

East Harlem is well-organized to address many of the safety challenges confronting its residents. The neighborhood has several involved institutions and community-based organizations and good ties between community affairs officers and enforcement officials that can work together to address the range of challenges, including issues around crime, homelessness, mental illness and drug use, a sense of safety on busy streets and in public parks and challenges between police and residents.

As the City moves on from the previous stop and frisk policies, community policing strategies can build connections and trust between the community and law enforcement, and resident involvement can support security in particular places. Physical improvements can also help to improve the sense of safety in key locations. This plan will advocate for policy, program and capital changes to make East Harlem safer.

1 National Night Out in East Harlem © Madeleine Ball / New York City Council
2 Lighting along East River Esplanade © Kate Milford 2016
3 Park Avenue viaduct © Kate Milford 2016

3

East Harlem has its own specific issues related to the neighborhood's unique physical and social conditions.

- The design of the NYCHA developments—towers in the park, lacking commercial frontage—and other affordable housing developments in East Harlem such as Franklin Plaza, the presence of "warehoused" unoccupied buildings and the more remote areas of the East River waterfront has meant that there are several areas in the neighborhood that feel unsafe because there are no "eyes on the street" and there is a lack of lighting and other critical design features.

- Most NYCHA developments have developed their own respective "gangs" over the past decade, many of which are in conflict with each other, ensnaring many young people and leaving residents isolated in and around their NYCHA developments for fear of encroaching on conflicting "turf."

- Truck traffic and taxi drop-offs have created unsafe areas for pedestrians, and there is a need for solutions on busy through streets and around the MetroNorth station.

- While the potential for strong collaboration exists between the police and local groups, more extensive neighborhood-specific training and deeper local partnerships and increased community policing approaches are needed to make efforts work properly.

- Services for job training, mental health, domestic abuse and drug use need to be assessed in terms of availability and effectiveness in order to address underlying social conditions.

- Vulnerability from storm surge and other extreme events is a potential threat to the neighborhood, and there should be clear response systems and protections put in place.

OBJECTIVES & RECOMMENDATIONS

1.

Improve district-wide emergency preparedness and ensure that residents and business owners know how to access resources in the event of a disaster.

1.1
Provide guidelines in multiple languages for sheltering in place and for evacuation procedures for vulnerable populations. Target senior centers, public housing developments, community centers, schools, and other public buildings for posting these guidelines. Give priority to buildings located in the flood zone.

1.2
Create a Long Term Recovery Group in East Harlem. Ensure that the Long Term Recovery Group has funding to conduct the following tasks in preparation for a potential future disaster/event: establish information/ resource hubs within the district, develop a strategy for information dissemination, identify protocols for residents, create a transportation plan for evacuation. ●●

1.3
Explore the possibility of creating an evacuation center that can better serve CD11 at PS 198/PS 77, which is located just south of the district on 96th Street between 3rd and Lexington Aves.

2.

Invest in the empowerment of East Harlem youth as a primary tool of violence reduction in the district.

2.1
Expand programming for high-risk youth and their families to other areas in the district, and ensure that after-hours programming is made available. Consider starting with expanding and diversifying programming at Corsi Houses and at the Thomas Jefferson Recreation Center. ●●

2.2
Invest in deepened, positive police engagement in NYCHA by funding more community-based police training initiatives. ●●

3.

Ensure that there are alternative approaches to addressing quality of life issues that affect vulnerable populations in addition to policing efforts.

●● Related to precedent on page 115

(CONTINUED) OBJECTIVES & RECOMMENDATIONS

3.1
Identify a location for a Diversion Center, a facility that, instead of incarcerating individuals with low-level offenses, will connect them to mental health, shelter, or other social services. Ensure that police officers have training to respond to these cases. mental health, shelter, or other social services. Ensure that police officers have training to respond to these cases.

3.2
Assess East Harlem mental health and drug rehabilitation center services. Identify quality of services, extent of utilization, and opportunities for improvement.

4.

Make physical improvements to increase resident safety within public places.

4.1
Develop specifications for improving the quality of lighting in key areas of East Harlem. Consider more careful siting of lighting, and relocate lighting that is currently obscured by street trees.

4.2
Provide strengthened protections for East Harlem cyclists and pedestrians interfacing with construction sites. Ensure that DOT works closely with its sister City agencies (Department of Design and Construction, Department of Buildings, Department of Environmental Protection, and Parks) to co-ordinate enforcement and ensure compliance with safety. For particularly large or complex construction sites, consider placing trained pedestrian traffic managers in the field, who will focus on bicycle and pedestrian safety in and around major construction projects.

4.3
Improve lighting within Marcus Garvey Park, Thomas Jefferson Park, and along the East River Esplanade.

4.4
Increase Parks Enforcement Patrol (PEP) within Harlem River Park, Marcus Garvey Park and Thomas Jefferson Park.

4.5
Take steps to enhance the safety of East Harlem commercial corridors. Potential initiatives include (a) increasing the quality of lighting along commercial avenues and (b) relocating the M35 bus stop from the corner of Lexington Avenue and 125th Street.

PRECEDENTS

LES Ready: Lower East Side Emergency Resource Map
Courtesy of Hester Street Collaborative

Mayor's Action Plan for Neighborhood Safety

The Mayor's Action Plan (MAP) for Neighborhood Safety committed $210.5 million in July 2014 to strengthen neighborhoods and reduce violent crime at the 15 NYCHA developments that account for nearly 20 percent of all violent crime in public housing. The investment aims to ensure that housing developments are well lit, well monitored and secure. $89 million will go towards infrastructure improvements, interior and exterior security cameras, camera connections to NYPD networks, new doors, layered (keyfob) access and improved exterior lighting. $12 million will fund public safety data collection, analysis and programming, such as community surveys, analysis of the impact of community centers in improving public safety and an evaluation of the developments' physical design to identify improvements that would reduce crime.[1]

This precedent relates to Recommendation 2.1, 2.2

1 http://manhattanda.org/press-release/district-attorney-vance-mayor-de-blasio-announce-101-million-investment-infrastructure

LES Ready

Lower East Side Ready is a collaboration between community groups and institutions to ensure that the neighborhood is prepared for future emergencies. LES Ready provides a place for coordination and collaboration among many different groups, and the partnership works to disseminate disaster preparedness information and assist the neighborhood in long-term resiliency after Superstorm Sandy and long into the future.[2]

This precedent relates to Recommendation 1.2

2 http://lesready.org/mission-statement/

SAFETY

1

Health & Seniors

2

1 Juice Bar inside Associated Supermarket, 128 E 116th Street © Kate Milford 2016
2 Mt. Sinai Hospital © Kate Milford 2016
3 Seniors at Washington Houses © John McCarten / New York City Council
4 East River Esplanade © Kate Milford 2016

3

A person's zip code is the greatest predictor of their health. As a foundation for quality of life, health is shaped by every domain of public policy from economic development to transportation, crime, education and housing. In East Harlem, there is a rich network of dedicated community organizations, healthcare providers and academic institutions devoted to improving the health of the community by making homes free and clear of mold, providing seniors support for aging in place, advocating for food security and increasing access to medical care.

4

SENIORS

16.8%
of East Harlem residents are
60 and over

Of all East Harlem Seniors

40.1%
are living alone

31.9%
have difficulty with their mobility

35.5%
don't speak English as their primary language

Source: 2008-2011 ACS 3-year PUMS, compiled by DFTA

POVERTY

42%
of East Harlem seniors are living in poverty

Source: 2008-2011 ACS 3-year PUMS, compiled by DFTA

LIFE EXPECTANCY

East Harlem	Upper East Side
76 years	**85** years

Source: NYC DOHMH, Bureau of Vital Statistics, 2003–2012

East Harlem	Upper East Side
70% of residents	**92%** of residents

report their own health as good

CHILD ASTHMA HOSPITALIZATIONS

(per 10,000 children ages 5–14)

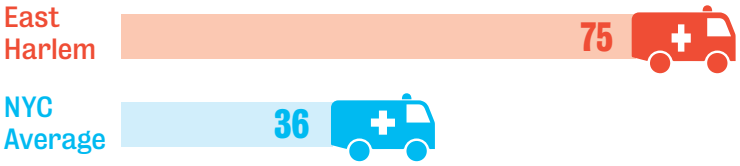

Source: New York State Department of Health, Statewide Planning and Research Cooperative System, 2012–2013

Despite having such assets, East Harlem has sub-par health outcomes.

- Life expectancy in East Harlem is 76 years, one of the shortest in the city, and is plagued by various health disparities including asthma, heart disease, diabetes and infant mortality.

- Additionally, East Harlem has some of the highest rates of hospitalizations related to asthma, psychiatric issues, substance abuse and violence in the city. Addressing these issues require multiple actions, including environmental efforts to improve air quality and mold, efforts to strengthen community care-taking and changes to the built environment.

Older people have helped make New York City the incredible city it is today. They built our infrastructure, led social justice movements, made major advances in health care and technology and fueled our thriving economy. Older East Harlem residents are a part of this legacy and are key to preserving the history and culture of the community.

OBJECTIVES & RECOMMENDATIONS

1.

Create a local food system in East Harlem to improve access to healthy, affordable and quality food.

1.1
Amend the Food Retail Expansion to Support Health (FRESH) program to allow for a variance for food cooperatives and nonprofit grocers to be eligible for zoning and tax incentives under the program. ●●

1.2
Establish a year round comprehensive farmer's market in La Marqueta that is affordable to residents and businesses.

1.3
Increase funding and expansion of food box programs. Ensure that new pick-up sites are evenly distributed throughout East Harlem utilizing Grow NYC's 6 block radius threshold.

1.4
Increase food production/manufacturing and commercial kitchen spaces through light industrial zoning in East Harlem (see zoning rec 2.2). This would include establishing wash, chop & bag facilities that can cater to schools, senior centers, and other places that regularly prepare large quantities of food as part of their programs.

2.

Improve health service coordination and access.

2.1
Identify capital support for the Neighborhood Health Action Center, including assisting community organizations with building out the spaces that they will operate.

2.2
Increase funding for HIV prevention programming & services in East Harlem. Increase the number of supportive housing units for those living with HIV/AIDS and/or make this cohort the primary set aside for supportive housing units in East Harlem.

2.3
Conduct feasibility study to determine the placement and number of new Federally Qualified Health Centers (FQHC's) and Primary Care Clinics in East Harlem with a focus on the geographic middle of district boundaries.

2.4
Designate East Harlem as a priority community for the rollout of Direct Access NYC to ensure that East Harlem residents who are immigrants have access to the myriad of services, programs and initiatives under Direct Access NYC , including more translation services at neighborhood health facilities for Cantonese, Mandarin, Spanish and French speakers. ●●

2.5
Decrease the number of uninsured residents through equitable distribution of health insurance navigator programs.

2.6
Select East Harlem as a priority neighborhood for the rollout of Thrive NYC Initiatives including: Mental Health First Aid Training, NYC Mental Health Corps, Youth Mental Health First Aid.

●● Related to precedent on pages 122-123

3.

Create a neighborhood environment that allows for seniors to age in place comfortably.

3.1
Create an Aging Improvement District boundary designation building off the Neighborhood NORC (Naturally Occurring Retirement Communities) designation definition. The density and number of persons over age 50 in a given area is to be considered. Businesses, development projects, etc would be encouraged through use of existing incentives to make physical plants, services, goods age-friendly. Example: businesses in an age-friendly district would be allowed to use SBS storefront improvement funds to make age-friendly physical improvements. Note: The Mayor's Age-friendly NYC Commission should do this.

3.2
Prioritize built environment improvements called for in the East Harlem Age-friendly Neighborhood Action Plan, including ensuring the pedestrian plaza at 125th St. and Park Ave. is inclusive of older adults in its design and on-going programming.

3.3
For affordable units created on privately owned sites through MIH, ensure that they are built with accessibility features that cater to seniors, and that preference for some percentage of units is given to seniors.

4.

Enhance the built environment to promote health.

4.1
Work with NYCHA to ensure that proper connections are made through its waterfront developments leading to the Randall's Island footbridge at 103rd Street. Wayfinding, markings, and signage are required to identify routes from First Avenue, as well as dedicated bicycle and pedestrian routes and pavement and sidewalk improvements. While NYCHA must provide these on its property, DOT can provide technical assistance and design guidelines for greenway connections. Coordination is also needed with NYCHA to ensure that scaffolding does not obscure route across 102nd St.

4.2
Establish a Health District in East Harlem centered around the Neighborhood Health Action Center. Health districts are places where healthy choices are the easiest ones to make. They are places to heal, work, and live where new ideas on improving healthcare and public health can be developed, tested, and disseminated. A health district holistically connects the community to hospitals, health department offices, healthy food and commercial options, health-related incubators and technology, and career training.

4.3
Establish a multi-generational playground in East Harlem that has options for seniors and adults. Explore solutions to current DPR regulations preventing seniors from using seating near playgrounds. ●●

5.

Foster safe and healthy living environments.

5.1
Encourage the adoption of the Active Design Guidelines: Affordable designs for Affordable Housing as an industry standard in East Harlem. ●●

5.2
To the greatest extent possible, renovation and new construction should implement health-promoting practices including building envelope restoration; new heating, electrical, and ventilation systems; air sealing; new insulation and exterior cladding; window replacement; Energy-Star fixtures and appliances; asbestos and mold abatement; apartment gut retrofits; low volatile organic chemical and moisture-resistant materials; exercise enhancements; and indoor no-smoking policy.

The EHNP Steering Committee has recommended that a Health Impact Assessment (HIA) be conducted on subsequent ULURP processes, transportation plans, and NYCHA infill projects in East Harlem. More details on the HIA recommendation are outlined on pages 126-127 of this report.

PRECEDENTS

Via Verde © David Sundberg, Esto

Active Design Guidelines

Active design means harnessing the interior and exterior built environment to promote physical activity and a healthier population. Active design can be as simple as constructing buildings to facilitate users taking the stairs instead of the elevator. The Center for Active Design compiles strategies into Active Design Guidelines,[1] which promote active transportation options, greater physical activity within buildings, better spaces for active recreation and increased access to fresh food options.[2]

This precedent relates to Recommendation 5.1

1 http://centerforactivedesign.org/guidelines/
2 http://centerforactivedesign.org/ourapproach

Multigenerational playground in Benidorm, Spain, By ClemMcGann (Own work) [Public domain], via Wikimedia Commons

Multi-generational Playgrounds

Multi-generational playgrounds and outdoor gyms serve as places where children, adults and seniors of varying abilities can spend time outdoors, exercise and practice a healthy lifestyle. These playgrounds feature equipment traditionally used for children, and mix in senior and adult-friendly equipment.

The multi-generational approach to outdoor play is spreading across the nation. This concept is in part borrowed from cities in China and Europe, where outdoor fitness areas for adults have become routine. The Green Heart playground in Hull, Yorkshire is an especially unique type of playground where users can charge cell phones, power lights at the workout station and even contribute power to nearby buildings.[3] Closer to home, Macombs Dam Park in the Bronx features a state of the art adult playground, complete with comprehensive workout areas and equipment with moving pieces.[4]

This precedent relates to Recommendation 4.3

3 http://www.gizmag.com/tgo-green-heart-electricity-generating-gym/23078/
4 http://www.nytimes.com/2012/07/01/nyregion/new-york-introduces-its-rst-adult-playground.html

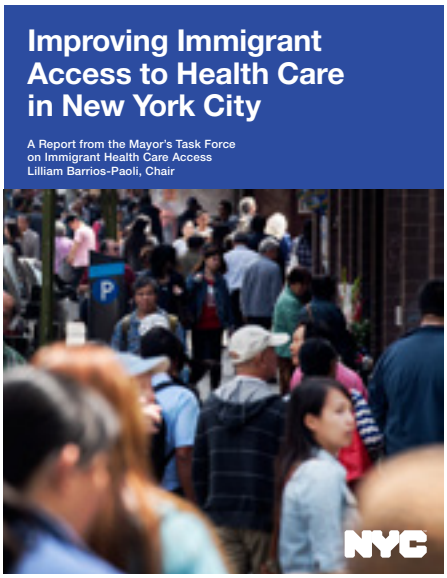

Cover, Improving Immigrant Access to Health Care in New York City, Mayor's Task Force on Immigrant Health Care Access, from http://www1.nyc.gov/assets/home/downloads/pdf/reports/2015/immigrant-health-task-force-report.pdf

FRESH at Super Fi Emporium
© Kate Milford 2016

Direct Access NYC

In late 2015, Mayor de Blasio announced the launch of Direct Access NYC, based on the report by the Mayor's Task Force on Immigrant Health Care Access. Direct Access, set to begin in 2016, seeks to provide reliable and more easily accessible health care opportunities for foreign-born residents who are uninsured and susceptible to poor health. The program seeks to increase the cultural and language competencies within the healthcare system, increase awareness of coverage options and increase accessibility to healthcare services.[1]

This precedent relates to Recommendation 2.4

1 http://www1.nyc.gov/ofce-of-the-mayor/news/701-15/mayor-de-blasio-plan-improve-immigrant-access-health-care-services

FRESH Program

New York City's Food Retail Expansion to Support Health (FRESH) program aims to increase access to fresh and nutritious foods in underserved parts of the city. The city designates FRESH-eligible areas, meaning that zoning and financial benefits are available for projects that bring grocery stores to designated neighborhoods. Since the program's launch in 2009, 20 projects have been approved.[2] Together, they will provide approximately 590,000 square feet of grocery store space, retain 500 jobs and create 940 new jobs.[3] The FRESH program surveyed customers in these new stores: 96 percent of respondents believe that the new store increased their access to fresh produce, and 80 percent of customers agree that they now purchase more fruits and vegetables.[4]

This precedent relates to Recommendation 1.1

2 http://www.nyc.gov/html/misc/html/2009/fresh.shtml

3 http://www.nycedc.com/program/food-retail-expansion-support-health-fresh

4 http://www.nycedc.com/system/les/les/program/FRESH%20Impact%20Report.pdf

FINAL COMMUNITY FORUM

Jan 27th, 2016
6–9pm

at El Museo del Barrio

350 Participants

The Final Community Forum was part large-scale report back, part community celebration and part open dialogue. The event showcased all of the objectives and recommendations developed by each subgroup. Community members had the opportunity to prioritize and give feedback on each of the 61 objectives and 232 recommendations previously voted on and approved by the Steering Committee. The session began with an overview and background presentation about the EHNP process that outlined the way recommendations of the plan were developed and approved. Participants then walked through El Museo del Barrio to individual stations for each of the 12 neighborhood planning topics to talk to the subgroup leads, read through the objectives and recommendations and prioritize their top objectives. A Q&A session was also held with a panel of Project Partners, Steering Committee Members and Subgroup participants. The evening wrapped up with food, drinks and music by local East Harlem musical phenomenon, Zon del Barrio.

CHALLENGES
4
5
6
7
Preserve affordable neighborhood amenities.
Preservar asequibles amenidades del barrio.

ENVIRONMENTAL IMPACT STATEMENT RECOMMENDATIONS

The Steering Committee wishes to see a more expansive environmental impact analysis framework for any Environmental Impact Statement (EIS) related to a zoning text or mapping amendment in the East Harlem community. The broader framework should take into account qualitative information, use the CEQR process as an educational and engagement opportunity with the community, and institute a feedback model for compliance and implementation of mitigation measures.

The purpose and need of the environmental review should explicitly cite and include the objectives of the East Harlem Neighborhood Plan, specifically the overarching goal of a vibrant, thriving, livable and affordable East Harlem. The findings should be analyzed from the perspective of the positions laid out in East Harlem Neighborhood Plan.

In addition to requesting an enhanced EIS be conducted, a supplementary integrated impact study should be completed as part of any proposal for East Harlem, utilizing quantitative and qualitative tools. The purpose of this study is to evaluate the potential for non-traditional unanticipated impacts and serve as a guide to bolster the respective subgroup objectives and gauge the impact on vulnerable sub-populations.

Standards for public engagement should go beyond the minimum requirements laid out in the CEQR manual and should use the process as an opportunity to ensure a more comprehensive proposal.

- ✓ The scoping notice and the draft scope of work should be available in multiple languages, and an extended review time frame beyond the minimum 30 days for public review and comment should be provided.
- ✓ In order to fully engage the community, a minimum of two scoping sessions should be held, one during the day, one at night, with childcare provided, and scoping sessions should have translation services available. The noticing of these sessions should be sent to local neighborhood papers and a good-faith effort made to flyer NYCHA developments and major transit hubs.
- ✓ Updates during the environmental review process should be provided on a regular basis by meeting with the Community Board and providing updated handouts available in multiple languages.

1. Recommendations for an Integrated Impact Statement

ECONOMIC IMPACTS

Examine how the recommendations may impact local businesses, neighborhood income distribution, human capital, employment, and real estate prices.

HEALTH IMPACTS

Examine how recommendations may impact community health using a social determinants of health perspective; including how access to goods, services, employment, safe and affordable housing, as well as open space contributes to the general well-being and health for the residents of East Harlem.

SOCIAL IMPACTS

Examine the impact of the recommendations on social factors such as gang and youth violence, child development, mental health and social capital.

EQUITY ASSESSMENT

Examine whether recommendations will have differential impacts on vulnerable sub-populations such as people who are homeless, physically disabled, and racial/ethnic minorities.

HOUSING AFFORDABILITY IMPACTS

Analysis of how new development will affect housing affordability for low-income residents.

2. Recommendations for an Enhanced Environmental Review

SOCIOECONOMIC CONDITIONS

Establish baselines regarding displacement, warehousing of existing residential units, neighborhood specific business challenges, and housing rents in the informal market.

Assess the impacts of development on construction workforce job quality, living wages, local hiring, absence of prevailing wage requirement and the availability of apprenticeship programs.

Study job generation as a result of the rezoning and how job and economic sector growth is benefitting local residents as compared to people outside of the immediate area.

HISTORIC AND CULTURAL RESOURCES

An assessment of eligible historic and cultural resources should be developed in direct consultation with the community, and such list should be used as the enhanced baseline for analysis for impacts.

WATER AND SEWER INFRASTRUCTURE

Assessment of water and sewer infrastructure should be enhanced with community surveys on existing water pressure conditions, frequency of sewage problems, sidewalk or street flooding et al to identify existing gaps in infrastructure investment and maintenance in addition to the need for additional capacity analysis.

PUBLIC HEALTH

Analysis should consider local smoking rates, activity level, availability of health care, and perceptions regarding availability of health care, active design, general well-being, acceptance and treatment of those with mental health concerns, or those in other vulnerable populations such as the elderly, those with terminal diseases such as AIDS, members of the LGBTQ community, and those who are homeless.

NEIGHBORHOOD CHARACTER

Definition and baseline should be informed by community input and expanded to include cultural and demographic identities, and mitigation measures to indirect or adverse impacts should be created with consultation by the community. Information collected during the community visioning sessions that noted exact locations or areas that contribute to the neighborhood character should be incorporated.

CONSTRUCTION IMPACTS

Consider as part of the baseline existing 311 calls regarding enforcement, work without a permit, emergency demolition permits, and other quality of life concerns. In cases where the soft analysis reveals sites adjacent or proximate to schools, senior care, or daycare centers and analysis is not triggered by the minimum thresholds set out in the CEQR manual, but the time frame for construction, noise and air impacts will correspond with operational hours and days, then a full analysis and mitigation measures consideration should be conducted.

LAND USE AND PUBLIC POLICY

Analysis should acknowledge that a change in administration may alter the public policy goal of affordable housing, and speak to mitigation measures to ensure long-term implementation of the target affordability levels established elsewhere in this plan.

ACTION PLAN

East Harlem residents, workers, business owners, religious and civic leaders have invested many years into the safe and healthy growth and development of their neighborhood. In May of 2014, Mayor Bill de Blasio released Housing New York, a plan to preserve and construct 200,000 units of affordable housing in all five boroughs over the next ten years. A cornerstone of the Plan is the re-zoning of several neighborhoods for increased density to facilitate housing development. East Harlem is one of those neighborhoods.

Between April 2015 and January 2016, thousands of East Harlem residents, workers and friends came out to participate in, provide input for and quite literally shape the East Harlem Neighborhood Plan (EHNP)—a community-based plan that proactively sets forth a comprehensive vision for the equitable, healthy, sustainable development of the neighborhood. The Community Action Plan identifies what needs to be done, by whom and how in order to ensure government accountability to community residents as the City develops and implements an East Harlem re-zoning plan.

Objectives

1. Ensure that the development of any City rezoning plan for East Harlem aligns with the community-driven East Harlem Neighborhood Plan (EHNP);
2. Advocate for the adoption of the East Harlem Neighborhood Plan and for particular recommendations within it before, during and after the ULURP process;
3. Advocate for EHNP recommendations to be adopted in planning documents that emerge from other East Harlem entities including but not limited to: Community Board District Needs Statements, DCLA Cultural Development Plans, participatory budgeting project proposals and federal, state and city agency capital and expense budgets targeted for the community;
4. Monitor the implementation of an East Harlem re-zoning to ensure that EHNP capital, programmatic and policy recommendations are realized in a timely and equitable way—understanding that to maximize effective impact, recommendations across topic areas must be adopted and implemented;
5. Monitor the implementation of key elements of the plan —like local hiring and affordable housing production—and ensure that contractors and developers meet the objectives laid out in the plan, and then are held accountable if they don't.
6. Establish a set of metrics to evaluate the short- and long-term impacts of a re-zoning plan on the East Harlem neighborhood, and have the ability within the rezoning plan and implementation to respond to negative impacts;
7. Provide for regular and ongoing engagement with and input from the East Harlem community.

MONITOR + EVALUATE

A. We recommend that a local oversight body, with deep roots in and representative of the diverse constituencies within the East Harlem community be established to ensure that any City re-zoning action and neighborhood plan align with the community-driven recommendations of the EHNP.

The EHNP Steering Committee established to shepherd the EHNP process is well placed to play an oversight role given their deep investment in the process, the community, and knowledge of the EHNP recommendations. Moving forward, there is an opportunity to identify and include additional voices on the current Steering Committee, such as small business owners and neighborhood residents. It is also an opportunity to ensure that all future Steering Committee meetings are open to the public.

The Steering Committee will:

- ✓ **PARTNER:** Work with the City to implement EHNP recommendations.
- ✓ **INFORM:** Create opportunities for regular updates to the EH community and for feedback on the operations and strategies of the Community Action Plan.
- ✓ **ADVOCATE:** Push for EHNP recommendations to be adopted by the City through any re-zoning or planning documents developed by other East Harlem or government agencies.
- ✓ **EVALUATE:** Establish a set of metrics by which to evaluate the impact of re-zoning action—both before and after implementation.
- ✓ **MONITOR AND ADVOCATE TO ALLEVIATE THE IMPACT:** Guide and monitor the implementation of mitigation measures supplied by the Final East Harlem EIS, provide additional mitigation recommendations produced by the Integrated Impact Statement leading up to and during ULURP. After completion of the disclosure document, energy should be focused on getting private and public sector actors to comply with the mitigation recommendations for future development.

Regular meetings between the Local Oversight Body and City agency representatives leading up to and during the ULURP process will be critical. To ensure the adoption and implementation of a wide range of EHNP recommendations, meetings will include not only those agencies most directly involved in a re-zoning process—DCP, HPD, EDC—but also DOE, DOHMH, DCLA, SBS, and DEP among others.

In order to ensure the success of the ongoing work of the Steering Committee, operational support must be funded. A model of a successful local oversight body is the Hunts Point Monitoring Committee, which grew out of the expansion of the Wastewater Treatment Plant. In that case, DEP funded an agency liaison, a Committee coordinator, and a consultant to support the research and writing needs of the Committee.

B. The Local Oversight Body / Steering Committee will play a critical role in advocating for and ensuring accountability to the East Harlem community on an agency-by-agency basis. However, to ensure the long-term, effective implementation of a comprehensive Neighborhood Plan in East Harlem, we recommend that the Administration identify an office of City government capable of coordinating the implementation of these recommendations across various agencies, recognizing that many of the recommendations are relevant to agencies that are not typically associated with neighborhood re-zonings (i.e. DCLA, ACS, DYCD, DOE, HRA, DOHMH, NYPD, DFTA, DOT etc.). Such an office will ensure the long-term, effective implementation of a comprehensive Neighborhood Plan in East Harlem as well as other neighborhoods to be re-zoned as part of the Housing New York initiative.

A model for cross-agency coordination and government accountability for major investment in the built environment is the Mayor's Office of Recovery and Resiliency (ORR). Charged with ensuring the successful implementation of major, post-Sandy infrastructure investment, ORR coordinates multiple City agencies, elected officials and local stakeholders in those neighborhoods most directly impacted by the storm.

The Housing New York Plan contemplates an $8.2 billion investment of public funds over ten years. It also lays out a new way of doing planning and re-zoning in New York City—in a way

What Could Community-based Oversight Look Like?

Facilities Monitoring Committees—Hunts Point, Newtown Creek, Croton Facility

The expansion of three Wastewater Treatment Plants—at Hunts Point, Newtown Creek and Croton in Van Cortlandt Park—triggered the formation of Facilities Monitoring Committees. The City Council ULURP approval of the expansion of the wastewater treatment facilities required the formation of the Monitoring Committees, in line with the 1989 Fair Share doctrine of the New York City Charter. Fair Share furthers "the fair distribution of the burdens and benefits associated with city facilities..." Historically, unwanted city facilities like waste transfer stations, bus depots, and shelters have been concentrated in low-income communities. The Fair Share doctrine works to ensure that the city's poorer neighborhoods are not saturated with unwanted facilities.

In the case of Hunts Point, six community members were appointed to the Monitoring Committee—two by the Borough President, two by the local City Council member, and two by the Congressional representative of the district. NYC DEP paid for an agency liaison and a consultant—in this case, New Partners for Community Revitalization—to write reports and perform necessary research to support the Committee's understanding and analysis of the expansion of the Wastewater facility and its impact on the community.

The Hunts Point Monitoring Committee met regularly for 5 to 7 years. Monthly meetings were held during the day and were officially public, although not advertised. Over the lifetime of the Committee, a handful of public town hall meetings were also held. In addition to regular meetings, the Committee issued formal comments on the Draft Environmental Impact Statement (DEIS) and other testimony related to the expansion of the facility.

that treats neighborhoods as more than just the sum of their parts, but as living, thriving ecosystems. To marshal the investment contemplated and to support ongoing, equitable growth and development in neighborhoods will require an integrated approach that reaches beyond the purview of any one agency. Comprehensive neighborhood planning requires a big picture approach to make sure that the many moving parts fit together and work as one.

C. Finally, we stand behind the City Council Speaker's proposed Neighborhood Commitment Plan—a way for the City Council to track commitments for housing, schools, infrastructure and other City services and programs included in rezoning plans in East Harlem as well as other neighborhoods. The Commitment Plan would accompany a rezoning proposal and serve as a tool for the City Council to keep tabs on promises made to communities and hold agencies accountable through Council oversight following ULURP approval.

Comprehensive, community-driven neighborhood plans like that proposed in East Harlem require a City—community feedback loop to ensure that commitments made are commitments kept in the long-term. A local oversight body, Citywide government office and City Council Commitment Plan together will ensure that we all work together to foster the equitable growth and development of our neighborhoods.

What Could City-wide Oversight Look Like?

The Mayor's Office of Recovery and Resiliency (ORR)

In March 2014, Mayor de Blasio established The Mayor's Office of Recovery and Resiliency (ORR). ORR is charged with overseeing and implementing the resiliency initiatives laid out in One New York: The Plan for a Strong and Just City and A Stronger, More Resilient New York (SIRR). These recommendations include: strengthening coastal defenses, upgrading buildings, protecting infrastructure and critical services and making "our homes, businesses, and neighborhoods safer and more vibrant."

ORR, housed in the Mayor's Office, and reporting directly to First Deputy Mayor Anthony Shorris, oversees more than $20 billion of initiatives including capital projects, planning studies, policy reform and legislation designed to protect the city's most vulnerable neighborhoods from future severe weather events. Their charge is to ensure that infrastructure investments are multi-functional, strengthening the long-term physical and social resiliency of New York City's neighborhoods.

ORR coordinates the work of city, state and federal agencies, works with elected officials and Community Boards, local businesses, civic and religious groups and community-based organizations, to ensure a coordinated effort and the efficient and equitable implementation of investments.

Current projects overseen by ORR include: East Side Coastal Resiliency project in Lower Manhattan, Red Hook Integrated Flood Protection System feasibility study, and the USACE South Shore Staten Island and Rockaways Reformulation Study, among many others.

ADVOCATE + ORGANIZE

A CALL TO ACTION

Project Partners, Steering Committee members, Subgroup participants, and all local residents, workers, and business owners will:

- ✓ Spread EHNP goals, priorities and recommendations throughout the East Harlem community;
- ✓ Ensure that EHNP information is understandable and widely available;
- ✓ Make clear pathways between EHNP recommendations and community action to ensure their adoption and implementation;
- ✓ Encourage other community organizations to refer to the EHNP goals when crafting their own community investment strategies.

Project Partners, Steering Committee members, and Subgroup participants will:

- ✓ Actively use their own web platforms for dissemination, as well as the EastHarlemPlan.nyc website;
- ✓ Hold regular public meetings at convenient hours that provide an update on rezoning and action plan activities;
- ✓ Hold open steering committee meetings;
- ✓ Provide the opportunity for new organizations to join the EHNP Steering Committee;
- ✓ Provide the opportunity for new organizations and interested individuals to join subgroups.

Project Partners and Subgroup Leads will:

- ✓ Hold regular meetings with relevant City agencies on the subgroup recommendations;
- ✓ Report back the content of those meetings to the East Harlem community.

City Agencies + Elected Officials:

- ✓ Clearly delineate those EHNP recommendations that are and are not incorporated in the City re-zoning action;
- ✓ Provide regular updates and reports to the public on development and implementation of the Plan;
- ✓ Regularly report, in person, to the respective Community Board 11 committees and Full Board meetings;
- ✓ Provide written updates on Plan accomplishments and ongoing progress, posted online and/or widely distributed through existing information channels; and
- ✓ DCP provide regular report backs to the community in addition to regular subgroup / monitoring committee meetings with DCP on the rezoning / ULURP.

IMPLEMENT + EVOLVE

The EHNP lays out a comprehensive roadmap for equitable neighborhood development. The Plan reflects an integrated vision for the future of East Harlem. It is essential, therefore, that recommendations across topic areas (zoning, affordable housing development, economic development, education, health & seniors, etc.) and recommendation type (capital, program and policy) are adopted and implemented.

East Harlem community members must remain involved throughout the life of any City re-zoning plan to ensure the implementation of those projects, programs and policies that address community-defined priorities. In addition, the Plan itself must remain a living document. As development occurs, the neighborhood ecosystem will evolve and change. The policies, projects and programs included in the Plan must respond to reality on the ground, including results from the evaluation of Plan impacts and outcomes.

EAST HARLEM ESTIMATED ULURP TIMELINE

DCP Scoping Hearing → **ULURP certification** → **ULURP complete** → **Implementation of rezoning plan**

SPRING 2016 | FALL 2016 | SUMMER 2017

Check in with eastharlemplan.nyc for up to date information.

APPENDICES

A PROCESS
B SURVEYS & FEEDBACK
C COMMUNITY VISIONING SESSIONS MATERIALS
D RESEARCH

KEY TERMS AND ABBREVIATIONS

AMI
Area Median Income is used to determine the rents for affordable housing units. The AMI for NYC is currently $77,700 for a family of three.

FAR
Floor area ratio controls how large buildings can be based on their zoning lot size. The higher the FAR, the larger the building can be.

Zoning
Sets requirements for every piece of land in the city including what uses can be in a building and a building's size and shape.

Density
The number of people who live in a given area.

MIH
Mandatory Inclusionary Housing is a proposal in NYC that would require new development in areas that have been rezoned to provide on-site affordable housing.

Open space
Any open piece of land that is undeveloped (has no buildings) and is accessible to the public, usually for recreational purposes (i.e. parks, community gardens, playgrounds, public seating areas and public plazas).

EIS
An Environmental Impact Statement is a document that describes the impacts on the environment as a result of a proposed action, such as a rezoning or development. It also describes the impacts of alternatives as well as plans to mitigate the impacts.

CBOs
Community based organizations are representative of a community or a significant segment of a community and are engaged in meeting human, educational, environmental, public safety, and/or community needs.

Community Benefits Agreements (CBAs)
CBAs are legally enforceable private contracts between a developer and local community organizations. In exchange for community support, the developer will provide certain benefits such as local hiring, dedicated community space, or other items the community is able to negotiate.

Tenant harassment
Tenant harassment is the willing creation, by a landlord or his agents, of conditions that are uncomfortable for one or more tenants in order to induce willing abandonment of a rental contract.

Community Land Trust (CLT)
Community land trusts are nonprofit, community-based organizations designed to ensure community stewardship of land. The trust acquires land and maintains ownership of it permanently. It enters into a long-term, renewable lease instead of a traditional sale.

NextGen NYCHA
A part of Mayor de Blasio's affordable housing plan, NextGen NYCHA is a ten-year long-term strategic plan that details how NYCHA will create safe, clean, and connected communities for residents and preserve New York City's public housing assets for the next generation.

Uniform Land Use Review Process (ULURP)
The official NYC public review process for all proposed zoning map amendments, special permits and other actions. ULURP sets a time frame and other requirements for public participation at several levels, from Community Boards to the City Council.

Workforce1
A service provided by SBS that prepares and connects qualified candidates to job opportunities. Workforce1 programs help build relationships with hiring businesses and connect qualified candidates to opportunities.

Business Improvement District (BID)
A defined area within which businesses are required to pay an additional tax (or levy) in order to fund projects within the district's boundaries. The BID can also draw on other public and private funding streams.

The Project Partners of the East Harlem Neighborhood Plan would like to make a point to acknowledge the unremitting efforts of our facilitators, WXY and Hester Street Collaborative. Without their technical guidance and thoughtful approach to community engagement, this process would not have been as successful. The hard work and passion of several planners and interns from both WXY and Hester Street Collaborative enabled us to create a roadmap for East Harlem's future, truly reflective of the needs and desires rooted in the community.

A special thank you to the many individuals who represented organizations on the Steering Committee and Subgroups, donating countless hours of their time to ensure the success of this process. The Project Partners would also like to acknowledge El Museo del Barrio, Hunter College, Children's Aid Society, Johnson Community Center, Harlem RBI/Dream Charter School, and New York Academy of Medicine for generously donating their spaces in order to accommodate the hundreds of participants who came out to our workshops. Most importantly of all, we owe our sincere gratitude to the East Harlem community members who participated in this process, helping us to reinvigorate the meaning of community-based planning.

EAST HARLEM Neighborhood PLAN

CB11M East Harlem
COMMUNITY BOARD ELEVEN OF MANHATTAN

COMMUNITY VOICES HEARD
Fighting for our families, our communities & ourselves

APPENDIX D:
Passive House Resources

APPENDIX D: PASSIVE HOUSE RESOURCES

Passive House certification can currently be pursued through:

- the Passive House Institute (PHI): http://passiv.de/en/
- the Passive House Institute US (PHIUS): http://www.phius.org/home-page

PHIUS was spun off the original PHI standard in 2007, where it attempts to provide more flexibility to account for varying climate zones present in the US. Either standard is acceptable for the purposes of this RFP.

Passive House Feasibility Assessment

For projects planning to certify through PHI, it is highly recommended that initial project designs be rendered in Sketch-up. Projects planning to certify through PHIUS should use Sketch-up or Revit to render initial project designs. This initial rendering will be required as part of the initial feasibility assessment for RFP finalists.

PHI Feasibility Analysis

designPH is a plugin for the popular 3D design software SketchUp. RFP finalists pursuing certification under PHI will be required to evaluate the basic design through designPH and submit the results of the analysis to HPD for review. These submissions should include:

- Climate set to NYC
- Components: glazing and window frame details
- Assemblies: R-values for all opaque elements
- Space heating demand
- Treated floor area (TFA)

Teams may also use Passive House Planning Package (PHPP) in lieu of designPH. These submissions should include:

- Space heating demand (< 4.75 kBtu/ft2.year)
- or Space heating load (< 3.17 Btu/hr.ft2)
- Cooling demand, sum of sensible and latent cooling (< 5.39 kBtu/ft2.year)
- Cooling load (< 3.25 Btu/hr.ft2)
- Frequency of overheating (<77F for 10% of year)
- Airtightness assumed (n50 = 0.6 ACH)
- Primary energy demand (< 38 kBtu/ft2.year)

PHIUS Feasibility Analysis

Finalists pursuing certification under PHIUS will be required to submit a preliminary feasibility study to HPD that is performed by PHIUS. PHIUS offers this service to standardize the initial feasibility analysis for all projects pursuing certification. This service is offered to finalists at a cost of $1500. Teams will need the following information in order to submit to PHIUS for the initial feasibility study:

- Simplified Sketch-up model or Revit model of the envelope
- Number of units
- Unit sizes
- Floor area

Finalists required to provide the PHIUS feasibility study can engage the process by visiting: http://www.phius.org/phius-certification-for-buildings-and-products/phius-2015-project-certification/submit-a-project-for-certification

Pre-certification Documentation

If selected to develop this Project, within 6 months of designation the developer is required to provide evidence that the pre-certification process has been completed.

PHI
The team must submit the pre-certification letter from the accredited certifier stating that the project has been pre-certified, along with a copy of the verification sheet (front sheet) from the PHPP file (Passive House Planning Package), proving that the building was modeled. Key performance indicators that will be evaluated at this stage include:

- R-values for all opaque elements
- U-values for glass and frames
- Type of ventilation system including heat recovery efficiency
- Heating and cooling system

PHIUS
Teams pursuing certification under PHIUS will be required to submit the pre-certification certificate issued by PHIUS.

Useful Passive House Resources

PHI resources

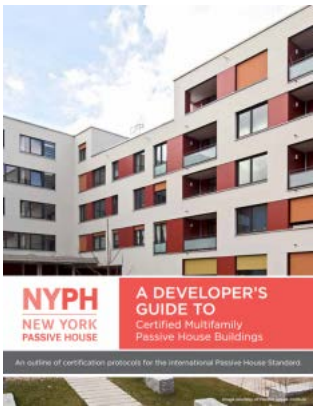

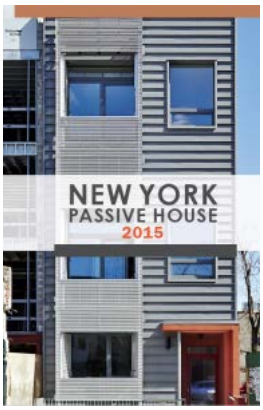

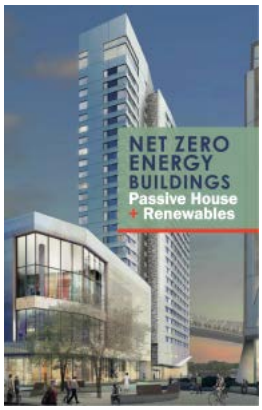

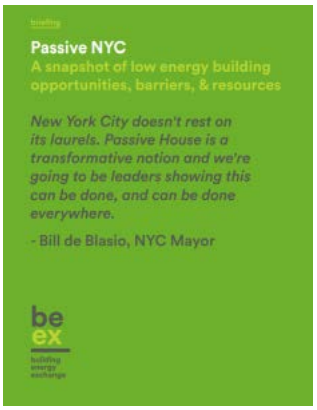

*Click image to follow link

PHIUS resources

- An Introduction to Passive House Principles and Policy:
- http://www.phius.org/Releases/Environmental-Law-In-NY-March-2015.pdf

- General Media Resources:
  http://www.phius.org/media-resources-calendar-of-events

- Technical resources, protocols, publications, general:
  http://www.phius.org/software-and-technical-resources

- Multifamily certification intro packet and MF QAQC standard/protocol:
  - http://www.phius.org/PHIUSPlus2015docs/PHIUS+%20Certification%20Packet%2010.09.15%20-%20PHIUS+%202015.pdf
  - http://www.phius.org/PHIUSPlus2015docs/PHIUS+%20MF%20Certification%20Standard%20v2_FINAL_151105.pdf

- Multifamily tools & calculators, protocols, sample input: http://www.phius.org/software-and-technical-resources/wufi-passive-and-other-modeling-tools/calculators-and-protocols

- Department of Energy Publication - Climate Specific Passive Building Standards: http://www.nrel.gov/docs/fy15osti/64278.pdf

APPENDIX G:
HPD Design Guidelines for Multifamily New Construction and Senior Housing

HPD Design Guidelines

FOR MULTIFAMILY NEW CONSTRUCTION & SENIOR HOUSING

Department of
Housing Preservation
& Development
www.nyc.gov/hpd
Bill de Blasio, MAYOR
Vicki Been, Commissioner

Document Version 5.2.2016

Disclaimer

The New York City Department of Housing Preservation and Development (HPD) does not guarantee, warrant, or make representations that the information in this document is complete, accurate, or current. HPD assumes no responsibility for the application of the material or information contained herein nor for any error, omissions, or other discrepancies. Nothing in the document is intended to create nor does it create any enforceable rights, remedies, entitlements, or obligations. HPD reserves the right to change or suspend any or all parts of this document without notice.

The illustrations included within the Guidelines are intended merely to assist in navigating the various requirements and design standards; to aid staff during the plan review for projects participating in HPD programs and activities; and to add clarity and transparency to designers responding to HPD's design review comments. This document is not meant to offer a design template, but rather to document and illustrate some of the design controls and potential outcomes.

The designer of record is responsible to ensure a project is designed in a manner to comply with the applicable laws, regulations, codes, and design standards including, but not limited to, those related to non-discrimination.

CONTENTS

PREFACE 4
SPECIAL THANKS 4
INTRODUCTION 5
INTENTION OF THE DESIGN GUIDELINES 5
ACCESSIBLE DESIGN & CONSTRUCTION 6
FAIR HOUSING ACT 7
SECTION 504 OF THE REHABILITATION ACT OF 1973 7
2010 ADA STANDARDS FOR ACCESSIBLE DESIGN 8
FLOOD RESISTANT CONSTRUCTION 8
ACTIVE DESIGN GUIDELINES & BEST PRACTICES 9
AGING IN PLACE 10
ENERGY EFFICIENCY & RESOURCE CONSERVATION 10
AFFORDABLE HOUSING GATEWAY INITIATIVE 11
AFFORDABLE HOUSING JUMPSTART INITIATIVE 11
COMMERCIAL AND RETAIL SPACES 11
DESIGN GUIDELINES 12
BUILDING ENVELOPE 12
MASSING & ELEVATIONS 12
MATERIAL & PATTERN 12
SITE PLANNING 12
BUILDING PLANNING 13
LOBBY & CIRCULATION 13
COMMON SPACES 13
APARTMENT PLANNING 14
AREA CALCULATION 14
SAMPLE UNIT AREA CALCULATION 15
DETAIL OF AREA CALCULATION 16
DESIGN REQUIREMENTS FOR 0-BEDROOM UNITS 17
DESIGN REQUIREMENTS FOR 1-BEDROOM UNITS 19
DESIGN REQUIREMENTS FOR 2-BEDROOM UNITS 22
DESIGN REQUIREMENTS FOR 3-BEDROOM UNITS 25
DESIGN REQUIREMENTS FOR 4-BEDROOM UNITS 28

Preface

The New York City Department of Housing Preservation and Development (HPD) Office of Development's Division of Building and Land Development Services (BLDS) has issued the *HPD Design Guidelines for Multifamily New Construction and Senior Housing* (the *Guidelines*) as an update to the *HPD Design Guidelines for New Construction.* The *Guidelines* represent an effort to meet housing demand, respond to market changes, and contain costs; HPD has revised the design requirements to reflect the critical need for affordable housing demand, respond to emerging design practices, and provide greater flexibility in affordable housing development. The *Guidelines* are intended to apply to HPD-supported housing developments across a variety of conditions. However, HPD recognizes that any guidelines cannot address all development scenarios: when unique or special circumstances, extraordinary market conditions, or special community characteristics require a project that would deviate from any aspect of the *Guidelines*, the development team must consult with the applicable loan program and notify BLDS in writing in advance of the first design submission. For consideration, a proposal must identify known areas of non-compliance and explain the rationale behind design decisions, project constraints, and other considerations contributing to non-compliance. In some instances, it may be necessary to schedule a preliminary *design concept consultation meeting* with representatives from HPD program, BLDS, and the development team.

Special Thanks

This update to the *HPD Design Guidelines for Multifamily New Construction and Senior Housing* is the product of intense internal evaluations and community feedback, and would not have been possible without the help of numerous individuals and organizations. In particular, HPD would like to thank the New York State Association for Affordable Housing (NYSAFAH), the American Institute of Architects (AIA) New York Chapter, Peter Bafitis, Harold Bravo, Wids DeLaCour, Mark Ginsberg, Eric Goshow, Manny Halpern, Christine Hunter, Ted Liebman, James McCullar, Lisa Morgenroth, Rich Rosen, Mary Rusz, Susanne Schindler, Bill Stein, Meenakshi Varandani, and Fernando Villa.

Introduction

The New York City Department of Housing Preservation and Development (HPD) Office of Development's Division of Building and Land Development Services (BLDS) has issued the *HPD Design Guidelines for Multifamily New Construction and Senior Housing* for HPD-assisted multi-family new construction and senior housing projects, but they may also be used to guide the design of 1-3 family homes. Design review to ensure compliance with the requirements of the *Guidelines* is a prerequisite to loan closing for any new construction projects developed under applicable HPD loan programs.

BLDS design reviews assure that the minimum standards outlined in the *HPD Design Guidelines for Multifamily New Construction and Senior Housing* are integrated into the project design. Design reviews also provide guidance to the development team regarding applicable laws, rules, codes, and regulations, including the New York City *Building Code*, New York City *Zoning Resolution*, New York City *Housing Maintenance Code*, New York State *Multiple Dwelling Law*, the *Fair Housing Act*, Section 504 of the *Rehabilitation Act of 1973*, and the *Americans with Disabilities Act*.

It is the development team's responsibility to ensure that the buildings' design and construction comply with all laws, rules, regulations, and codes mandated by city, state, and federal authorities having jurisdiction. The *Guidelines* are a policy document intended to establish a minimum design standard that may exceed what would otherwise be required. The laws, rules, regulations, and codes governing the activity, in event of a conflict, take precedence over the *Guidelines*.

Intention of the Design Guidelines

The *HPD Design Guidelines for Multifamily New Construction and Senior Housing* establish the design criteria by which BLDS will evaluate proposed developments upon application to the Agency for financial assistance. Within this document, the term *must* indicates a requirement; the term *should* indicates a recommendation.

HPD seeks to support projects that meet several core principles. Projects should: have a strong relation to the neighborhood (urban design and building planning); meet the needs of households and individuals (apartment planning and accessible design); encourage active design; utilize sustainable or renewable products; and select sustainable features that can potentially reduce operating costs.

Design Responsiveness Considerations

HPD's mission is to ensure that the quality of housing stock in New York City is at a minimum preserved, and preferably improved. To this end, HPD emphasizes topical areas requiring special consideration beyond New York City codes and regulations:

- *Accessible Design and Construction* –HPD seeks to develop projects that will invite and engage persons with physical impairments, whether mobility, hearing, visual, or other. Projects designed to achieve universal/inclusive design are encouraged by HPD.
- *Flood Resistant Construction* – Adapting to flooding and severe storm events poses particular challenges for the City's housing stock, both existing and proposed. HPD seeks projects that are designed to be resilient to flooding or readily adaptable to future increases in the floodplain or flood elevation.
- *Active Design* – HPD encourages the implementation of cost-effective active design principles such as those outlined in *Active Design: Affordable Designs for Affordable Housing*.
- *Aging in Place* – HPD encourages the implementation of cost-effective measures to accommodate the needs of aging residents, particularly in developments targeted for senior residence.
- *Energy Efficiency and Resource Conservation* – All HPD-assisted new construction loan program projects are required, at a minimum, to meet the Enterprise Green Communities standards for energy efficiency and sustainability. HPD encourages low-cost capital investments and/or larger capital investments (inclusive of any incentives, grants or non-affordable housing specific funding) with a payback period less than or equal to half their useful life.
- *Commercial/Retail Spaces* – HPD encourages the development of mixed-use buildings, residential structures that combine commercial and/or retail spaces. These spaces serve the needs of residents and neighbors and contribute toward a more vibrant neighborhood.

Accessible Design & Construction

HPD-assisted projects must comply with federal accessibility laws and regulations—including Section 504 of the *Rehabilitation Act of 1973*, the *Fair Housing Act*, and HUD's implementing Regulations (24 CFR Parts 8[1] and 100, respectively). HPD must also affirmatively further the goals of the *Fair Housing Act*. These, and related laws and regulations, prohibit discrimination based on disability and establish design requirements for program accessibility and physical accessibility in connection with housing programs. In addition, HPD must ensure that such comply with the local accessibility requirements of Chapter 11 of the New York City *Building Code*.

1 While 24 CFR Part 8 Regulations indicate the minimum of 5% mobility impairment and minimum of 2% hearing or visual impairment requirements apply to projects receiving federal assistance, subsequent civil rights laws broadened the requirement to all programs and activities of housing agencies, such as HPD, that accept federal assistance.

As an assurance that HPD-assisted projects meet all the applicable accessibility laws and regulations, each architect must provide an "Architect's Statement", pre-construction and post-completion, certifying that the design and construction of the project complies with the accessibility requirements of the New York City *Building Code*, Section 504 of the *Rehabilitation Act of 1973*, and the *Fair Housing Act*, as applicable. The form is available from the HPD website http://www1.nyc.gov/site/hpd/developers/BLDS-eSubmit.page.

ACCESSIBLE / ADAPTABLE

The various laws, regulations, and architectural standards use the terms "accessible" and "adaptable". For the purposes of this document, the term "accessible" is used throughout, with the recognition that the apartments/units may require adaption (e.g. installation of grab bars, lowering of countertop height, etc.) to meet the specific needs of households or individuals.

FAIR HOUSING ACT

All new construction housing projects built for first occupancy after March 13, 1991 consisting of four or more units are required to comply with the design and construction requirements of the *Fair Housing Act*. A Joint Statement of The United States Department of Housing and Urban Development and U.S. Department of Justice, Accessibility (Design and Construction) Requirements for Covered Multi-family Dwellings Under the Fair Housing Act, dated April 30, 2013 included ten (10) safe harbors satisfy these requirement. The Joint Statement is available at (http://www.ada.gov/doj_hud_statement.pdf). Information on the *Fair Housing Act* design and construction requirements is also available at http://www.fairhousingfirst.org.

SECTION 504 OF THE REHABILITATION ACT OF 1973

All HPD-assisted projects with five or more dwelling units must comply with the accessibility requirements of Section 504 of the *Rehabilitation Act of 1973.* Section 504 requires that, for projects involving the new construction of housing containing five or more dwelling units and for projects involving the substantial alteration of housing containing 15 or more dwelling units, a minimum of five percent (5%) of the total number of dwelling units must be accessible and designated for households with a person with a mobility-impairment. An additional minimum of two percent (2%) of the total dwelling units must be designated for households with a person with a hearing or vision impairment. These units must be distributed throughout the project and made available in a sufficient range of sizes as not to limit the choice of individuals/households with handicaps/physical impairments.

The *Uniform Federal Accessibility Standards* (UFAS) or the *2010 ADA Standards for Accessible Design* serve as the design standards for compliance with Section 504 of the *Rehabilitation Act of 1973* (UFAS is available at http://www.access-board.gov/guidelines-and-standards/buildings-and-sites/about-the-aba-standards/background/ufas; the 2010 ADA Standards at http://www.access-board.gov/guidelines-and-standards/buildings-and-sites/about-the-ada-standards/ada-standards.) The requirements for new construction and substantial alteration projects differ from those for moderate alterations of existing housing;

refer to Section 8.23 "Alterations of Existing Housing Facilities" of the implementing regulations (http://www.ecfr.gov).

2010 ADA STANDARDS FOR ACCESSIBLE DESIGN

Places of public accommodation and commercial facilities (e.g. retail spaces, community facilities, leasing offices, etc.) must comply with the *Americans with Disabilities Act* (ADA) guidelines, *2010 ADA Standards for Accessible Design*.

For architects seeking to use the 2010 ADA standards to meet the UFAS requirement, HUD has identified certain provisions in the 2010 Standards that provide less accessibility than is currently required by UFAS and/or HUD's Section 504 regulation. As a result, HUD is not deeming use of those specific provisions of the 2010 Standards as a means of providing accessibility under Section 504. For more information and instructions for use of this alternative design standard, please refer to the HUD notice: http://www.regulations.gov/#!documentDetail;D=HUD-2014-0042-0001.

Flood Resistant Construction

As required by State law, New York City is a Participating Community in the National Flood Insurance Program (NFIP), as administered by the Federal Emergency Management Agency (FEMA). In New York City, the Department of Buildings is the flood plain administrator and regulates building design and construction in accordance with the NFIP and FEMA requirements. Further, New York City Law and the DOB require that buildings be designed in accordance with the more restrictive of either the current or proposed Flood Insurance Rate Map (FIRM). Appendix G of the New York City *Building Code* sets forth the comprehensive regulations for flood plain management including the technical standards for compliance.

The New York City *Construction Codes* and the NFIP have established minimum requirements for flood-resistant construction in Special Flood Hazard Areas (based on the one percent chance or 100-year base flood elevation). Developers of HPD-assisted projects located in such areas should consider designing them to withstand a FEMA 500-year storm event, to the maximum extent practicable or feasible.

In addition, for HPD-assisted projects not located in areas currently governed by DOB requirements for flood-resistant construction, but for which it is reasonable to believe flooding may occur—those in FEMA 500-year flood plain, New York City Office of Emergency Management Evacuation Zones, and/or areas impacted historically by major weather event (e.g. Hurricane Sandy)—the design should consider flood-resistant techniques and measures consistent with the DOB/FEMA

requirements, to the maximum extent practical or feasible. HPD is cognizant that conflicts exist between the requirement to make sites readily accessible and the desire to elevate the structure for flood resilience. Generally:

- The entire structure, including any foundation, is to be designed to withstand collapse, lateral movement, and flotation due to extreme weather conditions.
- For all heating, ventilation, air-conditioning, electrical, plumbing, fire suppression, and other utilities services, equipment, and controls shall be constructed or located in areas that would preclude infiltration or accumulation of water within the components or machinery during flooding conditions. If electronic controls or devices are used to abate water infiltration, an emergency power supply (generator) should be permanently installed in-place.
- All projects that are subject to design review and located in either the FEMA 100- and 500- year flood plain, the New York City Office of Emergency Management Evacuation Zones, and/or areas impacted historically by a major weather event (e.g. Hurricane Sandy) may be required to submit additional information to HPD.

Project designers may be asked to consider the following strategies and implement them to the maximum extent practicable or feasible:

- Basements, cellars, and entry floors are designed in a manner to protect against flood and or surge waters
- Mechanical equipment and Building Operating System locations (including emergency generators and fuel supply) are positioned to protect from flood and/or surge waters
- The Emergency Generator has the capacity to maintain continuous service for all essential and critical systems and services in the building(s) during and after an emergency. Such systems and services include, but are not limited to:
  - heating and hot water
  - elevator service
  - fire alarm and fire suppression systems with sprinkler booster pumps
  - exit signs
  - building entrance system / alarm system
  - lighting of public hallways, public areas, stairs, and lobbies to maintain the illumination level required by the New York City Electrical Code in addition to the mandated battery operated emergency lighting system

Active Design Guidelines & Best Practices

The Center for Active Design publishes *Active Design: Affordable Designs for Affordable Housing*[2] as a guide for designing affordable housing developments that benefit resident health and well-being. The document, available for download from http://centerforactivedesign.org/affordablehousingcosts, supplements New York

2 OCAD University, Georgia Institute of Technology, NYC Department of Health and Mental Hygiene. Active Design Supplement: Affordable Designs for Affordable Housing, 2013

City's *Active Design Guidelines*, which outline a broad array of architectural and urban design strategies to encourage, walking, bicycling, climbing stairs, using transit, active recreation, and a healthy diet. *Active Design: Affordable Designs for Affordable Housing* is more focused on feasible, low-cost strategies to integrate active design in affordable housing developments. The principles outlined in this document must be considered for new HPD development projects.

Aging in Place

Many adults prefer to live in their own home and community as they age, wishing to live safely, comfortably, and independently for as long as possible. BLDS strongly recommends cost-effective measures to ensure that affordable housing developments accommodate such lifestyle choices, particularly in senior housing developments. BLDS recommends, at a minimum, the following best practices:

- Handrails throughout the corridors
- Emergency pull-cords in bathrooms (and possibly in kitchens, bedrooms, and/or refuse rooms)
- All bathroom grab bars in-place in units
- 100% of apartments designed in accordance with UFAS

In addition, the New York City Department for the Aging and the American Institute of Architects New York Chapter are in the process of developing an Aging in Place Guide, which may be used as a design resource.

Energy Efficiency & Resource Conservation

HPD Policy and proposed City/local law requires that all new construction projects achieve Enterprise Green Communities (EGC) Certification (with an overlay for HPD projects). EGC requirements and compliance fall within the jurisdiction of the HPD Division of Planning and Pre-development.

Brownfield sites result from both site contamination and economics, and therefore, disproportionately plague lower-income communities. The sites stigmatize the community and may adversely affect the health of individuals or community at large. In 2014, the New York City Deputy Mayor's Office of Economic Development mobilized the Mayor's Office of Legislative Affairs, Mayor's Office of Environmental Remediation (OER), and HPD to lobby to preserve the New York State Brownfield Clean-up Program (BCP) within New York City, in part to support *Housing New York*. New York City HPD, OER, and the New York City Office of Management and Budget (OMB) have also collaborated on several OER led-initiatives to support the development of affordable housing on brownfield sites. The programs include:

AFFORDABLE HOUSING GATEWAY INITIATIVE

A grant / loan program requested in 2016 that will provide services to support BCP applications (including Phase I ESA and limited Phase II investigation) for HPD and New York City Housing Development Corporation (HDC) projects. The initiative was created to secure early enrollment in the State BCP to ensure the cost-basis for State tax credits are maximized and to ensure the highest possible rate of participation of HPD- and HDC-assisted projects in the State BCP. The program is most appropriate to initiate during the early-concept-phase of the site development (12-18 months before targeted closing date), anticipated value is between $ 75 – 125k per site.

AFFORDABLE HOUSING JUMPSTART INITIATIVE

A grant / loan program started in 2015 that currently includes State BCP-application services and State BCP-required plans, investigations, and limited remediation capital to support HPD and HDC projects. The program is most appropriate to initiate during the schematic-phase (9 – 12 months) of the site development. Maximum amount is $250k per site.

In addition, OER oversees the New York City Voluntary Clean-up Program, the New York City Brownfield Incentive Grant Program, and the New York City Clean Soil Bank, which are also available to support HPD and HDC projects. For more information, please visit http://www.nyc.gov/html/oer/html/home/home.shtml.

Commercial and Retail Spaces

HPD is interested in the long-term viability of retail space in affordable housing developments. To succeed, spaces must be able to accommodate the demands of the existing neighborhood context and be adaptable to changes to those demands. In collaboration with the Design Trust for Public Space, HPD has established a set of guidelines that inform developers of the most cost-effective strategies to develop high-quality, flexible retail spaces. The publication is available on HPD's website at http://www1.nyc.gov/site/hpd/developers/laying-the-groundwork.page.

Design Guidelines

Building Envelope

MASSING & ELEVATIONS

The massing of buildings should relate to the surrounding context, avoiding abrupt changes in building height from adjacent buildings and deviations from the street wall. Proportions, dimensions, and spacing of fenestrations should complement neighborhood patterns.

Articulation of massing, material, color, and texture should be used to define elements of buildings. Designs should relate to the human scale at the base level and activate the ground floor along the street frontage. The main residential entrance should be appropriately distinguished from the rest of the building and should provide shelter from inclement weather.

Building facades should minimize monotony or institutionality: HPD encourages variation in the type, color, and depth of material in the building envelope to create a sense of depth with light and shadow and to avoid a flat, planar appearance.

MATERIAL & PATTERN

All HPD projects should be constructed of high quality, attractive, sustainable, and durable materials that minimize maintenance costs. The choice of exterior finish materials should take into consideration the new building's relationship to the surrounding neighborhood in terms of color, texture, and pattern.

Site Planning

All outdoor space —including all yards at ground level, terraces, and any rooftop recreation areas— should be programmed, landscaped, and fully accessible: changes in elevation must be shown on all plans included in the submission. Front yards should be appropriately landscaped and should provide screening for all residential units adjacent to exterior utility meters, mechanical equipment, vehicular circulation and parking, and refuse storage. Any dwelling units adjacent to public or common spaces such as sidewalks, courtyards, and front and rear yards should also be adequately screened to ensure privacy for the residents of such adjacent units.

Building Planning

LOBBY & CIRCULATION

Each building must have a ground floor residential entrance lobby that is distinctly articulated and clearly visible from the street. This lobby must be restricted exclusively to residential use and must be entirely separate from the circulation of non-residential uses such as commercial, retail, or community facilities. BLDS strongly recommends entirely separating residential circulation, including secondary means of egress, from that of non-residential uses. Building services—including waste management, utilities, janitorial and mechanical rooms—should not open directly into the lobby.

The residential lobby must be an inviting space, distinguished from corridor circulation by choice of materials, high ceilings, seating areas or other design strategies. The lobby must have ample daylight and a direct view to the street or landscaped areas. If the building has a mailroom or mail alcove, it should be located in an area that is visible and accessible from the lobby. The residential lobby establishes circulation patterns within the building: the primary vertical circulation/elevator must be visible and accessible from the lobby. HPD encourages application of the strategies outlined in *Active Design: Affordable Designs for Affordable Housing* that promote fitness through active lifestyle, particularly emphasizing the location and treatment of circulation in buildings. BLDS encourages natural lighting throughout public circulation spaces and corridors.

On each floor, the public circulation space should be minimal. Long corridors are strongly discouraged except when designed to capture natural light: location of 3- and 4-bedroom units at the ends of corridors may reduce corridor length. The interior circulation system should minimize changes in corridor direction, recesses, and offsets. BLDS recommends a centralized core to diminish travel distances and multiple vertical circulation cores for larger buildings. To further the goals of the *Fair Housing Act*, HPD requires 5'-0" turning radii at the termination of corridors and at elevator cores.

COMMON SPACES

BLDS recommends providing a variety of thoughtfully designed and situated common spaces in all new buildings to the extent that they enhance the tenant experience and promote resident engagement. However, common spaces must not be so excessive as to reduce the number, capacity, or quality of residential units in the building. Otherwise, the occupancy and program of each space should determine its size, finishes, and furniture capacity. Common spaces may include, but are not limited to, the following:

- *Tenant Recreation Space* located adjacent to primary entryways, circulation, or outdoor space. This space should be adaptive to various uses and have access to natural light. HPD encourages multiple recreation spaces in buildings serving senior populations.
- *Laundry Room* conveniently located and directly accessible from the public circulation. BLDS encourages natural light and ventilation in this room.
- *Children's Indoor Play Room* with safe and durable play equipment and aesthetically interesting finishes. This space should be clearly visible from other common spaces such as the laundry room or tenant lounge.
- *Exercise Room* visually connected to other spaces.
- *Rest Room* convenient to other spaces.
- *Tenants' Storage* that is secure and fully accessible. Centralized storage areas should be located in close proximity to the elevator core, but BLDS encourages locating additional storage within individual units when possible.

The New York City Zoning Resolution establishes minimum areas, dimensions, and design requirements for common spaces in Quality Housing buildings, including tenant recreation spaces and refuse storage, and it incentivizes the inclusion of laundry facilities in these buildings. Bicycle storage is required by ZR 25-80, and should be located near circulation and easily accessible by the tenants.

Apartment Planning

FLEX CLOSETS

Some of the unit descriptions refer to a 'flex closet', which is a closet whose doors and hardware can be completely removed such that the closet area would become a nook where a bed could be located. The flex closet cannot be used to achieve floor clearances required for accessibility.

The following pages describe the unit requirements and calculation methodology. HPD program may permit limited variation from these requirements. For consideration, a proposal must identify known areas of non-compliance in the initial design submission, accompanied by an explanation of the rationale behind design decisions, project constraints, and other considerations contributing to non-compliance. Projects receiving Housing Trust Fund (HTF) funding may exceed the maximum allowable areas, up to the lower end of the unit area ranges required by the New York State Homes and Community Renewal (HCR) *Design Handbook*.

Area Calculation

Dwelling unit area calculation refers to the area within the perimeter walls, which includes all area between the finished surfaces of all exterior walls and demising partitions. Mechanical and plumbing chases and structural members that are integral components of exterior walls and demising partitions will be excluded from area calculations for the purpose of determining compliance with unit size requirements. Mechanical and plumbing chases and structural members (such as freestanding columns) that are not integral components of exterior walls or demising partitions will be included in the unit and room area calculations.

SAMPLE UNIT AREA CALCULATIONS

Mechanical and plumbing chases that *ARE NOT* integral parts of demising partitions *ARE* included in the unit area

Mechanical and plumbing chases that *ARE* integral parts of demising partitions *ARE NOT* included in the unit area

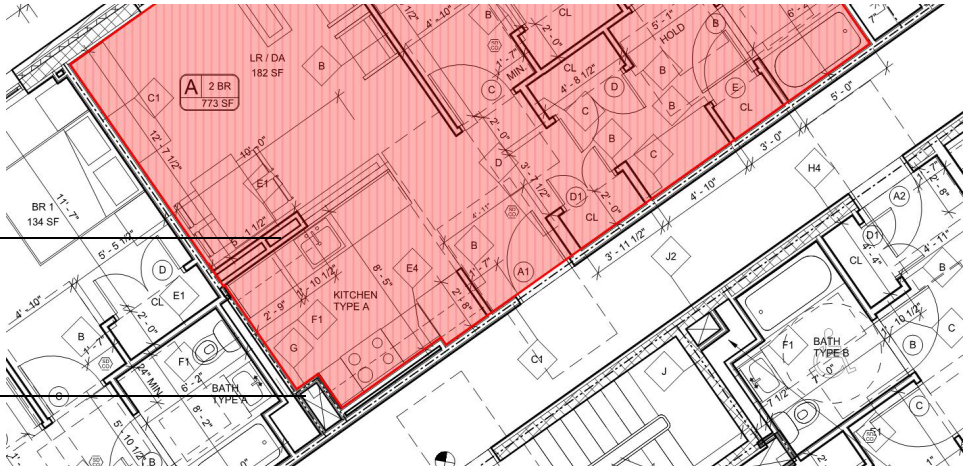

Freestanding structure is included in the unit area

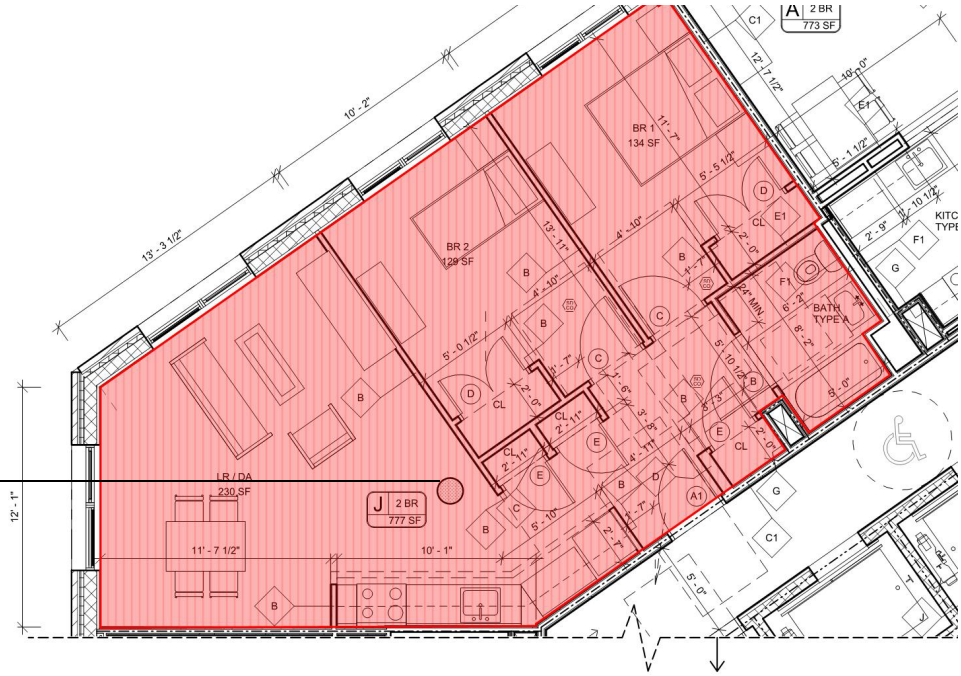

DETAIL OF AREA CALCULATION

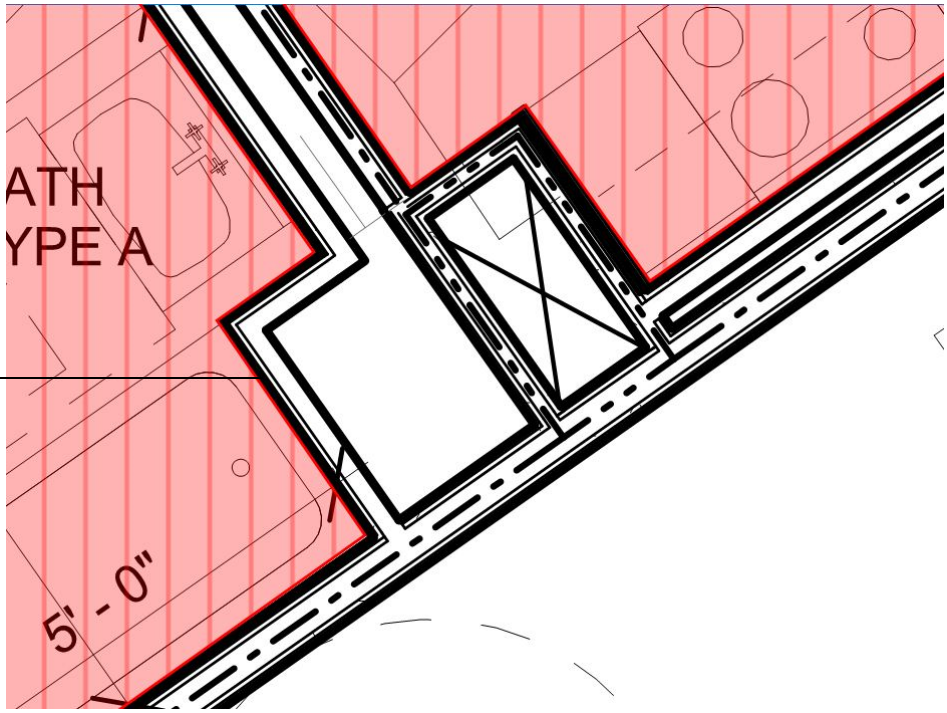

Measurement taken to the finished face of demising partitions and exterior walls

Design Requirements For 0-Bedroom Units

TYPES OF SPACES

The studio, or 0-bedroom unit, is a Class A apartment consisting of the following:

- *Living Room/ Dining Area /Sleeping Area* (LR/DA/SA)
- *Kitchenette** consisting at minimum of a 24-inch range, 24-inch refrigerator, 24-inch sink with a 30-inch removable base cabinet, one continuous 30-inch work surface with removable base cabinets underneath, and adequate wall hung cabinets above countertops and appliances. Countertop work surface segments must have a minimum width of nine (9) inches. Base cabinets must be two feet deep and countertops must be 25 inches deep. Shelving must be minimally 11.5 inches deep. A pantry / broom closet is encouraged. This kitchen must be accessible (see Accessibility Diagrams).
- *Bathroom* containing a bathtub with a showerhead, a sink, and a toilet. This bathroom must be accessible (see Accessibility Diagrams).
- *Adequate Storage* including clothing closets, linen closets, pantry, and/or bulk storage. All clothing closets must be at least two (2) feet deep. The clothing closet space may be divided, but must total no less than four (4) feet wide, and no segment may be less than two (2) feet wide. Separate linen closets are encouraged.

MINIMUM SIZES

The areas in the following table describe minimum areas and dimensions to the inside finished surfaces of the walls and partitions. All spaces must be accessible.

0-BR	LR/SA/DA	Storage	Target Net
Area	200 sf	10 sf	350 – 400 sf**
Min Dim	9'-0"	see description	-

**Requirements for appliance sizes are listed as absolutes, but nominal sizing may be applied, especially in the case of high-quality appliances. Verify market availability of selected appliances and provide product dimensions.*

***Units designed to the Universal Federal Accessibility Standards, in accordance with Section 504 of the Rehabilitation Act of 1973, and all units in vertical line with such units, may exceed target net area by up to 25 sf.*

SAMPLE 0-BEDROOM NEW CONSTRUCTION UNIT LAYOUTS

UNIT 0a
359 SF

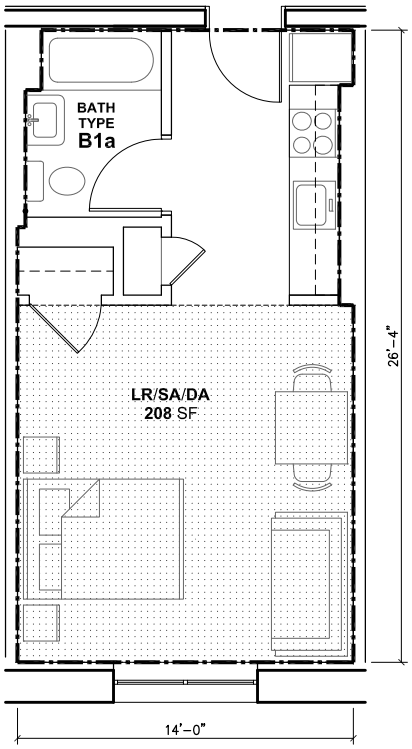

UNIT 0b
351 SF

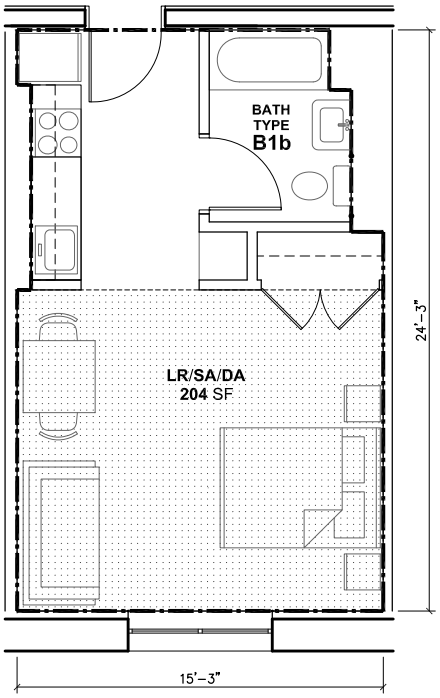

UNIT 0c UFAS Mobility Impaired Unit
361 SF

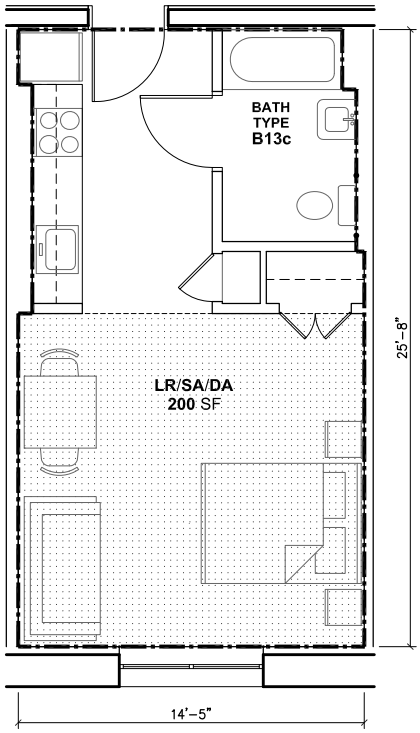

Design Requirements For 1-Bedroom Units

TYPES OF SPACES

The 1-bedroom unit is a Class A apartment consisting of the following:

- *Bedroom* with a closet, allowing flexible furniture arrangement.
- *Living Room / Dining Area* allowing suitable furniture placement
- *Kitchen / Kitchenette** consisting at minimum of a 27-inch range, 24-inch refrigerator, 24-inch sink with a 30-inch removable base cabinet, base cabinets with at least three (3) linear feet of countertop work surface (including one continuous 30-inch work surface with removable base cabinets underneath), and adequate wall hung cabinets over countertops and appliances. Countertop work surface segments must have a minimum width of nine (9) inches. Base cabinets must be two feet deep and countertops must be 25 inches deep. Shelving must be minimally 11.5 inches deep. A pantry / broom closet is encouraged. This room must be accessible (see Accessibility Diagrams).
- *Bathroom* containing a bathtub with a showerhead, a sink, and a toilet. This bathroom must be accessible (see Accessibility Diagrams).
- *Adequate Storage* including clothing closets, linen closets, pantry, and/or bulk storage. All clothing closets must be at least two (2) feet deep. The clothing closet space may be divided, but must total no less than four (4) feet wide, and no segment may be less than two (2) feet wide. BLDS will accept five (5)-foot wide removable 'flex closets' in bedrooms, where possible, to permit alternate furniture configuration according to resident preference. BLDS recommends providing a variety of closet configurations in similar layouts when possible. Separate linen closets are encouraged.

MINIMUM SIZES

The areas in the following table describe minimum areas and dimensions to the inside finished surfaces of the walls and partitions. All spaces must be accessible.

1-BR	BR	LR/DA	Storage	Target Net
Area	110 sf	170 sf	12 sf	500 – 550 sf**
Min Dim	9'-6"	9'-0"	see description	-

**Requirements for appliance sizes are listed as absolutes, but nominal sizing may be applied, especially in the case of high-quality appliances. Verify market availability of selected appliances and provide product dimensions.*

***Units designed to the Universal Federal Accessibility Standards, in accordance with Section 504 of the Rehabilitation Act of 1973, and all units in vertical line with such units, may exceed target net area by up to 25 sf.*

SAMPLE 1-BEDROOM NEW CONSTRUCTION UNIT LAYOUTS

UNIT 1a
514 SF

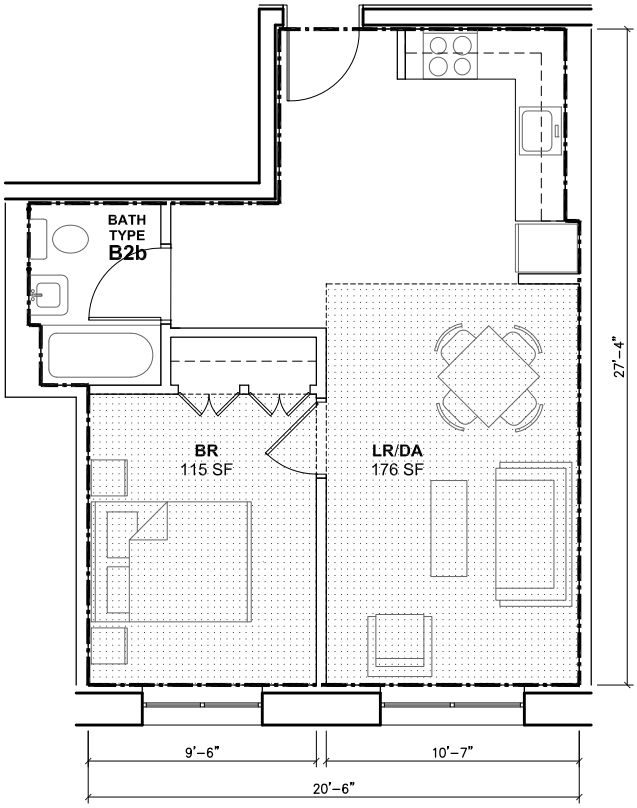

UNIT 1b UFAS Mobility Impaired Unit
550 SF

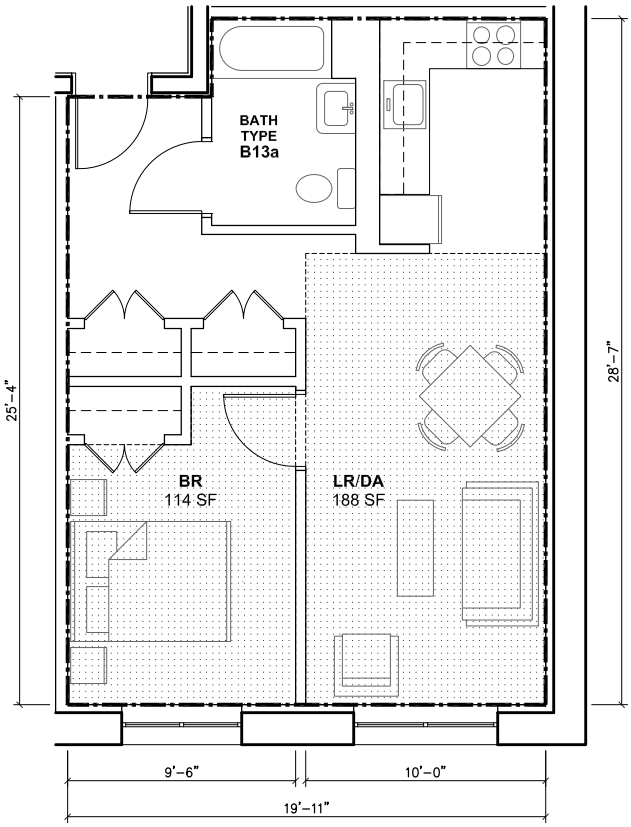

SAMPLE 1-BEDROOM NEW CONSTRUCTION UNIT LAYOUTS

UNIT 1c
518 SF

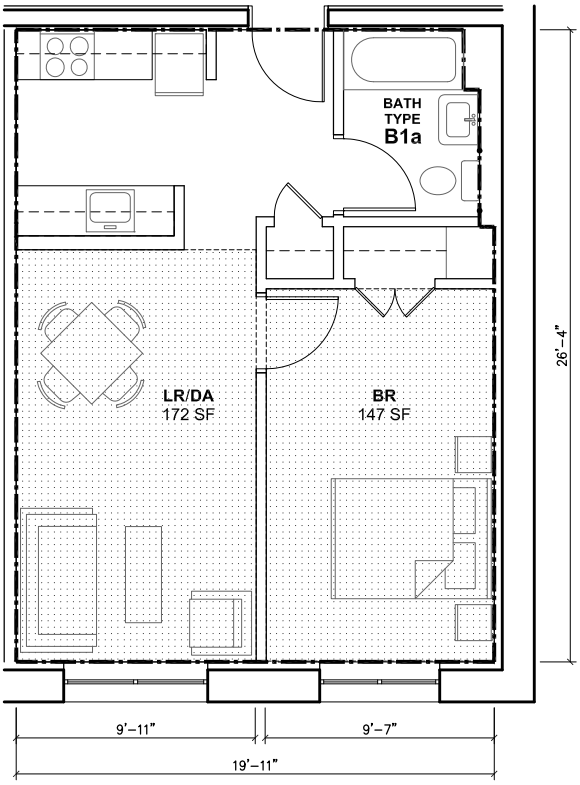

UNIT 1d UFAS Mobility Impaired Unit
504 SF

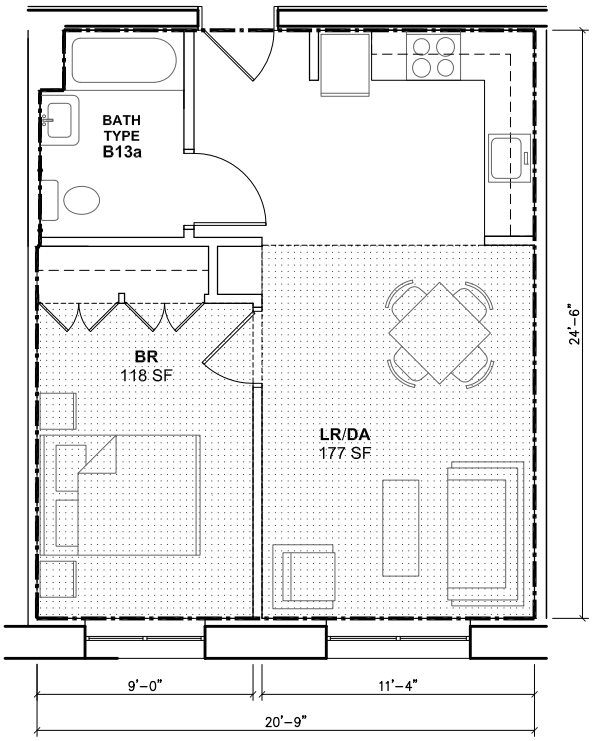

Design Requirements for 2-Bedroom Units

TYPES OF SPACES

The 2-bedroom unit is a Class A apartment consisting of the following:

- *Bedrooms*, each with a closet, allowing flexible furniture arrangement.
- *Living Room / Dining Area* allowing suitable furniture placement
- *Kitchen / Kitchenette** consisting at minimum of a 27-inch range, 30-inch refrigerator, 24-inch sink with a 30-inch removable base cabinet, base cabinets with at least three (3) linear feet of countertop work surface, (including one continuous 30-inch work surface with removable base cabinets underneath), and adequate wall hung cabinets over countertops and appliances. Countertop work surface segments must have a minimum width of nine (9) inches. Base cabinets must be two feet deep and countertops must be 25 inches deep. Shelving must be minimally 11.5 inches deep. A pantry / broom closet is encouraged. This room must be accessible (see Accessibility Diagrams).
- *Bathroom* containing a bathtub with a showerhead, a sink, and a toilet. This bathroom must be accessible (see Accessibility Diagrams).
- *Adequate Storage* including clothing closets, linen closets, pantry, and/or bulk storage. All clothing closets must be at least two (2) feet deep. The clothing closet space may be divided, but must total no less than eight (8) feet wide, and no segment may be less than two (2) feet wide. BLDS will accept five (5)-foot wide removable 'flex closets' in bedrooms, where possible, to permit alternate furniture configuration according to resident preference. BLDS recommends providing a variety of closet configurations in similar layouts when possible. Separate linen closets are encouraged.

MINIMUM ROOM SIZES

The areas in the following table describe minimum areas and dimensions to the inside finished surfaces of the walls and partitions. All spaces must be accessible.

2-BR	Primary BR	Secondary BR	LR/DA	Storage	Target Net
Area	110 sf	100 sf	170 sf	20 sf	650 – 725 sf**
Min Dim	9'-6"	9'-0"	10'-0"	see description	

**Requirements for appliance sizes are listed as absolutes, but nominal sizing may be applied, especially in the case of high-quality appliances. Verify market availability of selected appliances and provide product dimensions.*

***Units designed to the Universal Federal Accessibility Standards, in accordance with Section 504 of the Rehabilitation Act of 1973, and all units in vertical line with such units, may exceed target net area by up to 25 sf.*

SAMPLE 2-BEDROOM NEW CONSTRUCTION UNIT LAYOUTS

UNIT 2a
705 SF

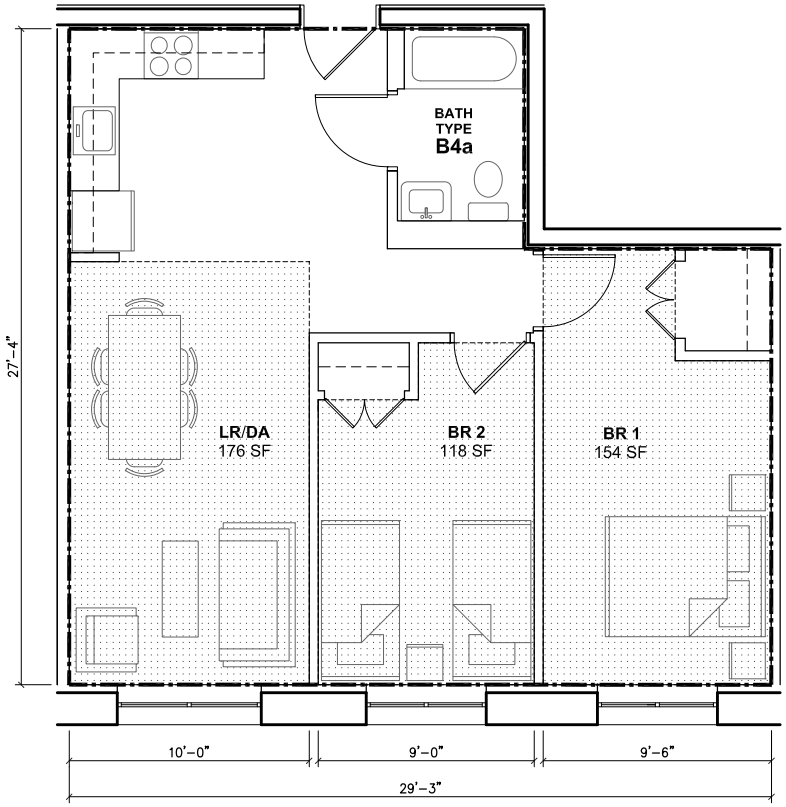

UNIT 2b UFAS Mobility Impaired Unit
719 SF

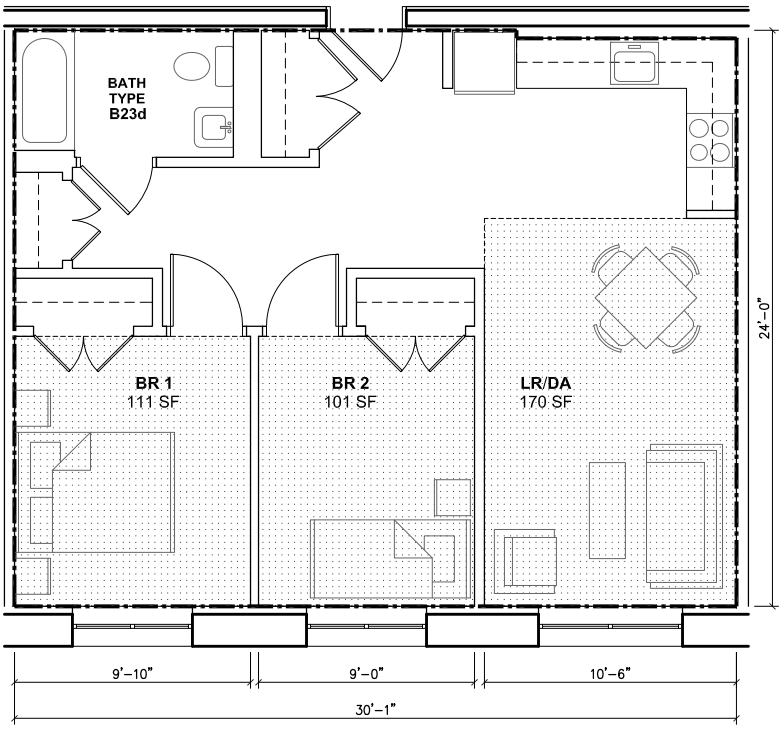

SAMPLE 2-BEDROOM NEW CONSTRUCTION UNIT LAYOUTS

UNIT 2c
653 SF

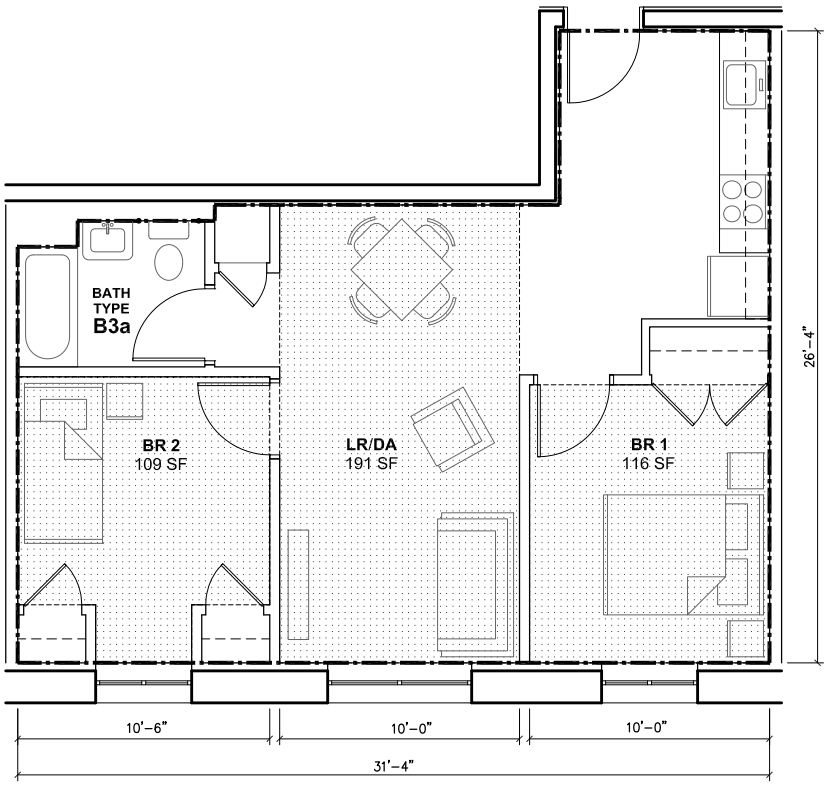

UNIT 2d
679 SF

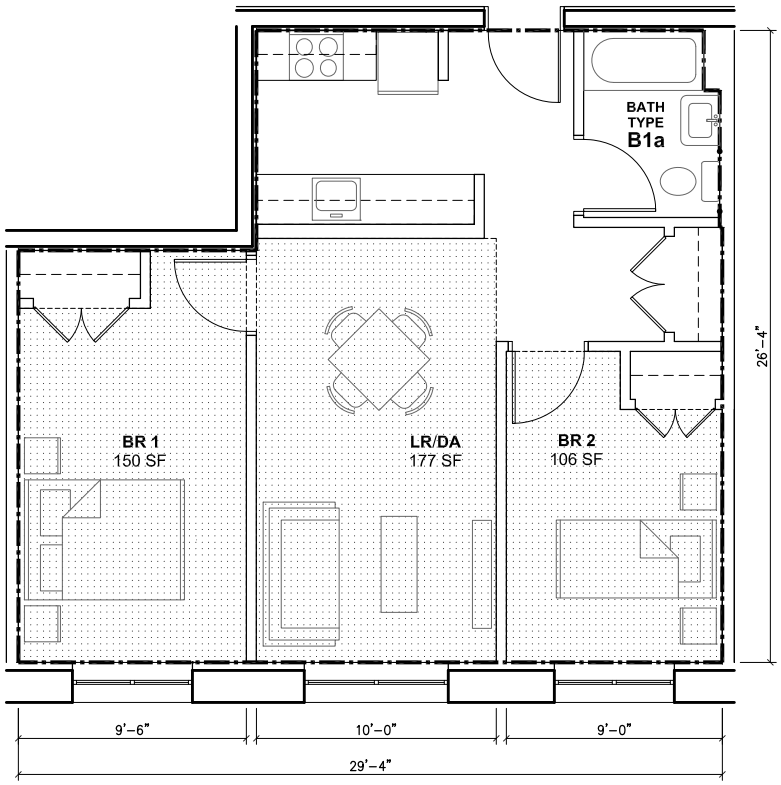

Design Requirements for 3-Bedroom Units

TYPES OF SPACES

The 3-bedroom unit is a Class A apartment consisting of the following:

- *Bedrooms*, each with a closet, allowing flexible furniture arrangement.
- *Living Room / Dining Area* allowing suitable furniture placement
- *Kitchen / Kitchenette** consisting at minimum of a 27-inch range, 30-inch refrigerator, 24-inch sink with a 30-inch removable base cabinet, base cabinets with at least three (3) linear feet of countertop work surface (including one continuous 30-inch work surface with removable base cabinets underneath), and adequate wall hung cabinets over countertops and appliances. Countertop work surface segments must have a minimum width of nine (9) inches. Base cabinets must be two feet deep and countertops must be 25 inches deep. Shelving must be minimally 11.5 inches deep. A pantry / broom closet is encouraged. This room must be accessible (see Accessibility Diagrams).
- *Bathroom* containing a bathtub with a showerhead, a sink, and a toilet. This bathroom must be accessible (see Accessibility Diagrams).
- *Secondary Bathroom / Half-bath* minimally containing a sink and toilet.
- *Adequate Storage* including clothing closets, linen closets, pantry, and/or bulk storage. All clothing closets must be at least two (2) feet deep. The clothing closet space may be divided, but must total no less than twelve(12) feet wide, and no segment may be less than two (2) feet wide. BLDS will accept five (5)-foot wide removable 'flex closets' in bedrooms, where possible, to permit alternate furniture configuration according to resident preference. BLDS recommends providing a variety of closet configurations in similar layouts when possible. Separate linen closets are encouraged.

MINIMUM ROOM SIZES

The areas in the following table describe minimum areas and dimensions to the inside finished surfaces of the walls and partitions. All spaces must be accessible.

3-BR	Primary BR	2nd BR	3rd BR	LR/DA	Storage	Target Net
Area	110 sf	100 sf	100 sf	170 sf	26 sf	850 – 950 sf**
Min Dim	9'-6"	9'-0"	9'-0"	10'-0"	see description	-

**Requirements for appliance sizes are listed as absolutes, but nominal sizing may be applied, especially in the case of high-quality appliances. Verify market availability of selected appliances and provide product dimensions.*

***Units designed to the Universal Federal Accessibility Standards, in accordance with Section 504 of the Rehabilitation Act of 1973, and all units in vertical line with such units, may exceed target net area by up to 25 sf.*

SAMPLE 3-BEDROOM NEW CONSTRUCTION UNIT LAYOUTS

UNIT 3a
877 SF

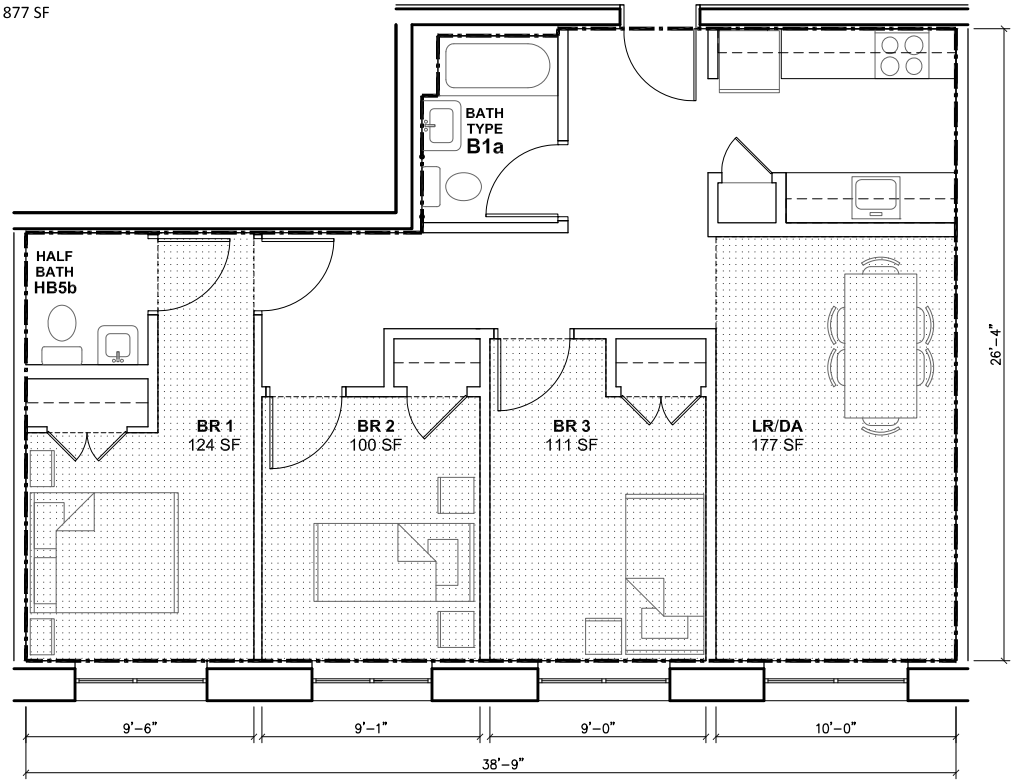

UNIT 3b
857 SF

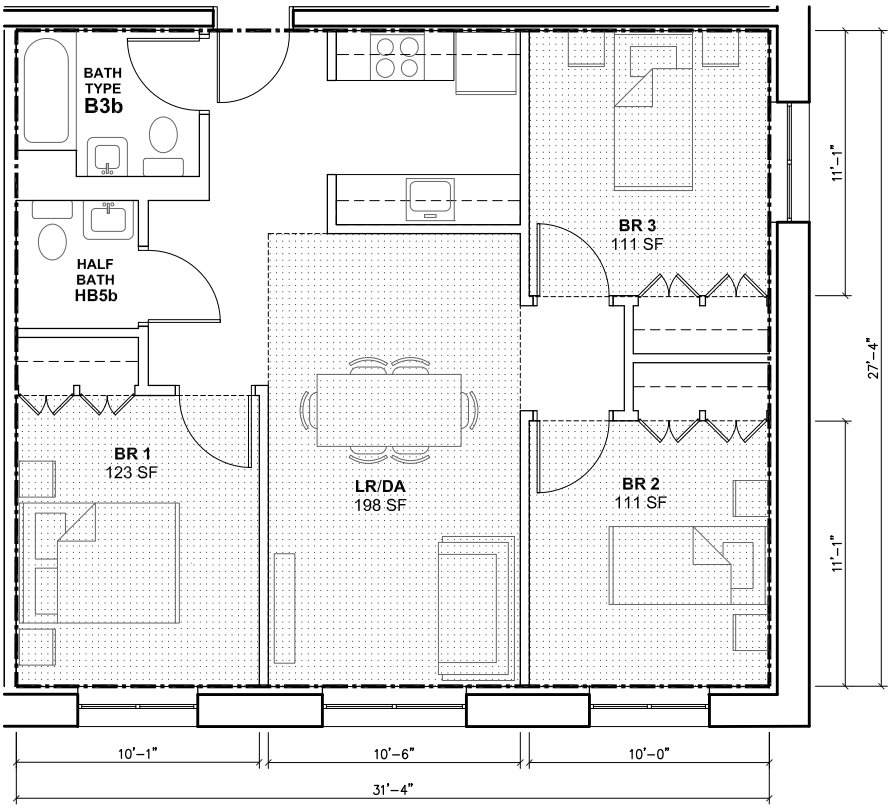

SAMPLE 3-BEDROOM NEW CONSTRUCTION UNIT LAYOUTS

UNIT 3c UFAS Mobility Impaired Unit

937 SF

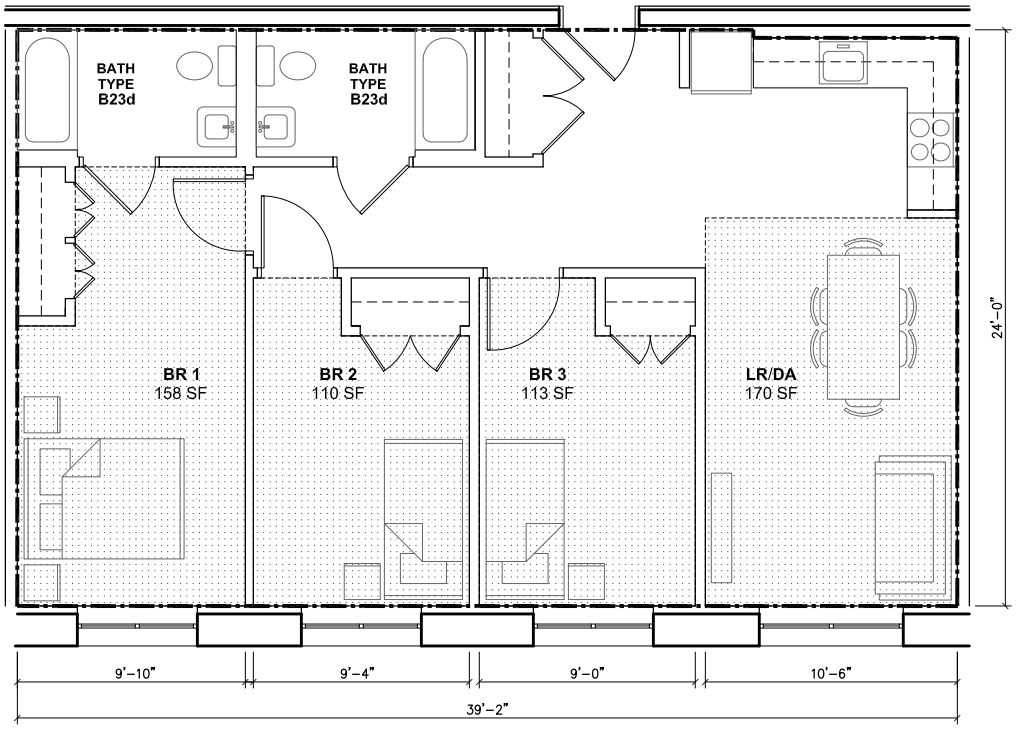

Design Requirements for 4-Bedroom Units

TYPES OF SPACES

The 4-bedroom unit is a Class A apartment consisting of the following:

- *Bedrooms*, each with a closet, allowing flexible furniture arrangement.
- *Living Room / Dining Area* allowing suitable furniture placement
- *Kitchen / Kitchenette** consisting at minimum of a 27-inch range, 30-inch refrigerator, 24-inch sink with a 30-inch removable base cabinet, base cabinets with at least three (3) linear feet of countertop work surface (including one continuous 30-inch work surface with removable base cabinets underneath), and adequate wall hung cabinets over countertops and appliances. Countertop work surface segments must have a minimum width of nine (9) o 3"inches. Base cabinets must be two feet deep and countertops must be 25 inches deep. Shelving must be minimally 11.5 inches deep. A pantry / broom closet is encouraged. This room must be accessible (see Accessibility Diagrams).
- *Bathroom* containing a bathtub with a showerhead, a sink, and a toilet. This bathroom must be accessible (see Accessibility Diagrams).
- *Secondary Bathroom / Half-bath* minimally containing a sink and toilet.
- *Adequate Storage* including clothing closets, linen closets, pantry, and/or bulk storage. All clothing closets must be at least two (2) feet deep. The clothing closet space may be divided, but must total no less than sixteen (16) feet wide, and no segment may be less than two (2) feet wide. BLDS will accept five (5)-foot wide removable 'flex closets' in bedrooms, where possible, to permit alternate furniture configuration according to resident preference. BLDS recommends providing a variety of closet configurations in similar layouts when possible. Separate linen closets are encouraged.

MINIMUM ROOM SIZES

The areas in the following table describe minimum areas and dimensions to the inside finished surfaces of the walls and partitions. All spaces must be accessible.

4-BR	Primary BR	2nd & 3rd BR	4th BR	LR/DA	Storage	Target Net
Area	110 sf	100 sf	88 sf	170 sf	32 sf	950 – 1075 sf**
Min Dim	9'-6"	9'-0"	9'-0"	10'-0"	see description	-

**Requirements for appliance sizes are listed as absolutes, but nominal sizing may be applied, especially in the case of high-quality appliances. Verify market availability of selected appliances and provide product dimensions.*

***Units designed to the Universal Federal Accessibility Standards, in accordance with Section 504 of the Rehabilitation Act of 1973, and all units in vertical line with such units, may exceed target net area by up to 25 sf.*

SAMPLE 4-BEDROOM NEW CONSTRUCTION UNIT LAYOUTS

UNIT 4a UFAS Mobility Impaired Unit

1,016 SF

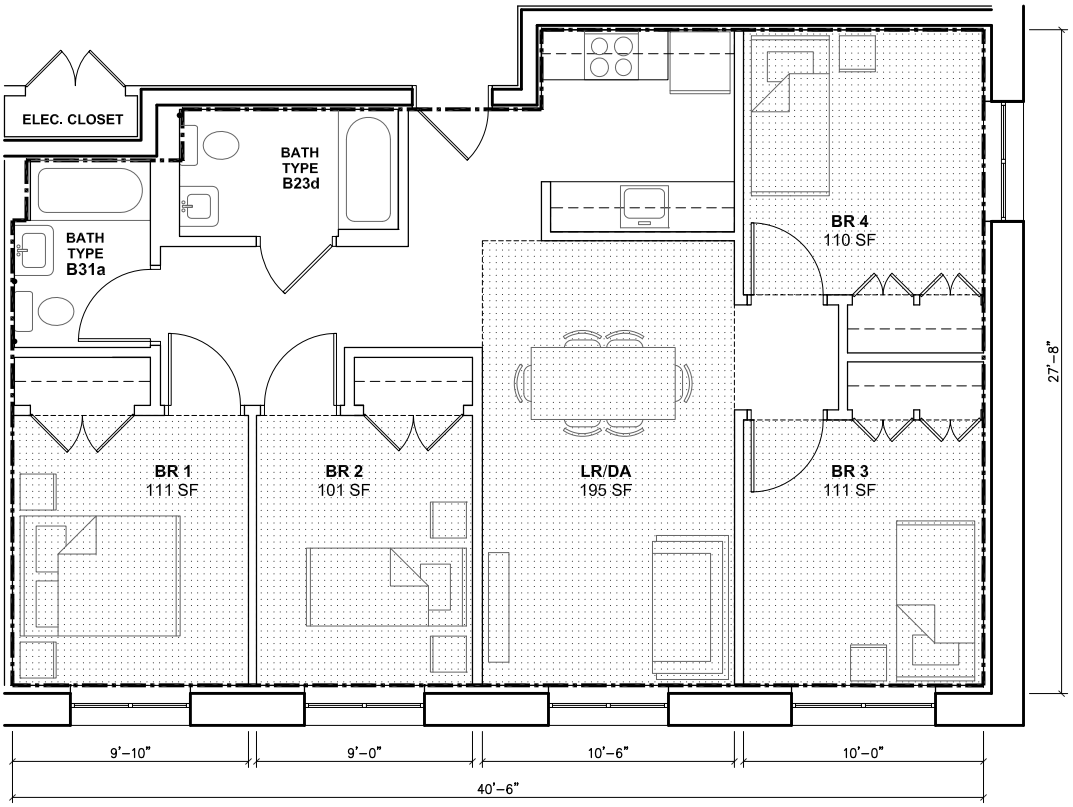

UNIT 4b

1,070 SF

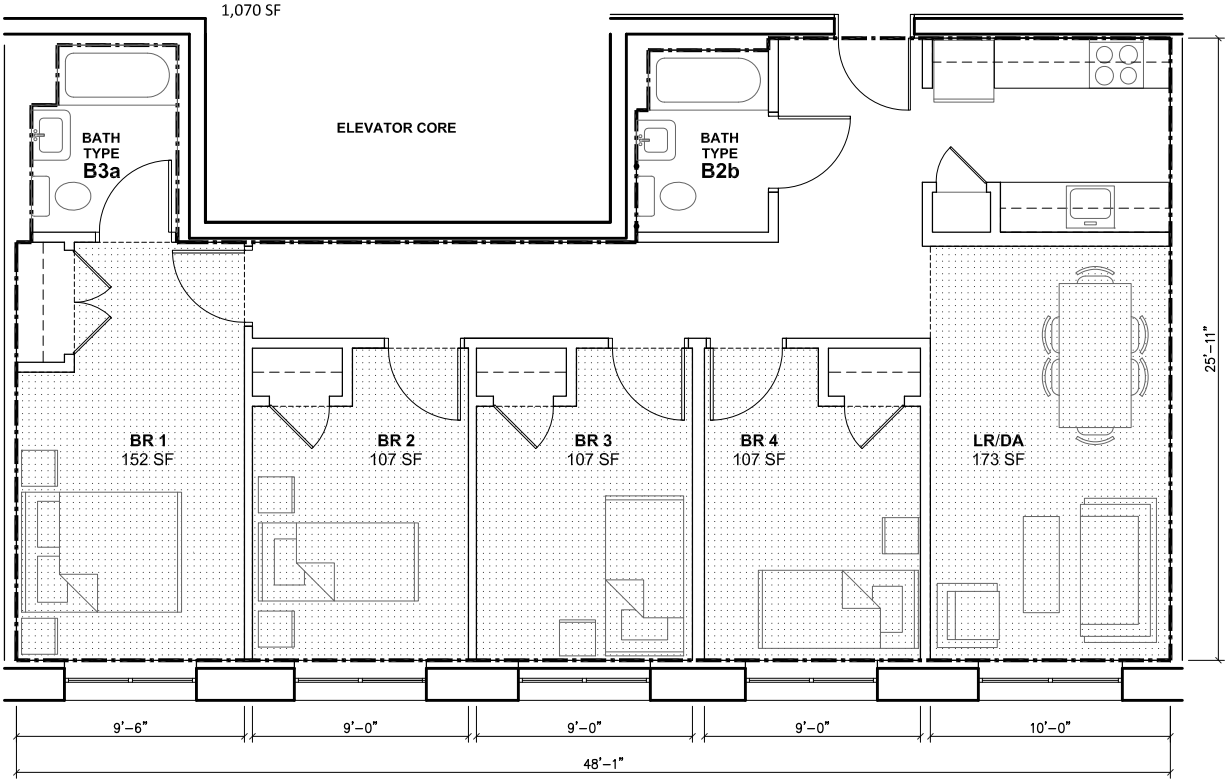

HPD BLDS Accessibility Diagrams

FOR KITCHENS AND BATHROOMS

ABBREVIATIONS:

ADA	The Americans with Disabilities Act–2010 ADA Standards
AFF	Above Finished Floor
ANSI	American National Standards Institute–ANSI/A117.1–1986
BC	2014 New York City Building Code
℄	Centerline
CFS	Clear Floor Space
Dia	Diameter
FHA	Fair Housing Act
Fig	Figure
ICC	International Code Council –ICC/A117.1–2009
K	Kitchen Layout Sheet (Ex K–1)
KR	Kitchen Reference Sheet (Ex KR–1)
max	Maximum
min	Minimum
NYC	New York City
Ref	Refrigerator
Sec	Section or Reference Section
SC	Sink+Counter
UFAS	Uniform Federal Accessibility Standards
WS	Work Surface

LEGEND:

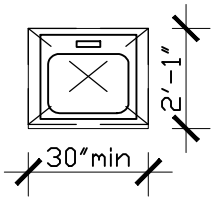

Kitchen Sink & Surrounding Counter, min 30" wide, with Removable Base cabinet below
As per
1. BC–Sec 1107.2.3, ICC–Sec 1003.12.4.1, Exception 2
2. UFAS–Sec 4.34.6.5(1) & (5), Fig 51

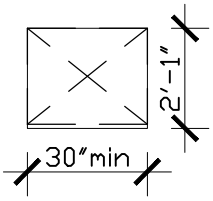

Work Surface, min 30" wide, with Removable Base cabinet below
As per
1. BC–Sec 1107.2.3, ICC–Sec 1003.12.3.1, Exception
2. UFAS–Sec 4.34.6.4(1) & (2), Fig 50

Refrigerator

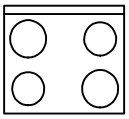

Range

Abbreviations & Legends for Kitchens

KR–1

NOTES:

1. Section 504 Mobility Impaired Unit (5% of total units) kitchens shall comply with UFAS, BC & FHA. All the rest including Section 504 Hearing/Visual Impaired Unit (2% of total units) kitchens shall comply with BC & FHA.
2. Please keep in mind that selected Safe Harbor for FHA compliance may effect these layouts.
3. The width and length of kitchen may change depending on the size of refrigerator & range.
4. Refrigerator is assumed to be 30" wide & 31" min deep with 1" air space behind the refrigerator.
5. Range is assumed to be 30" wide & 27" min deep.
6. Base Cabinet is assumed to be 24" deep & Counter to be 2'-1"(25") min deep.
7. Locate the required work surface in the kitchen against a full height wall so as to facilitate required wall cabinet or shelf above (see reference sheet KR-7).
8. Locate the refrigerator (Ref) so that the doors can swing open to a minimum of 90 degrees to facilitate parallel/forward approach.
9. In Section 504 Mobility Impaired Unit, range shall be self cleaning or be located adjacent to an adjustable height counter with knee space below, as per UFAS-Sec 4.34.6.7, Fig 52. (verify the market availability of range with self-cleaning ovens in the proposed dimensions).
10. In Section 504 Mobility Impaired Unit, either top of open Shelf or top of lowest shelf of wall cabinet above the required work surface shall be mounted at 48" maximum AFF, as per UFAS-Sec 4.34.6.10(1), Fig 50.
11. In Section 504 Mobility Impaired Unit, microwave shall be installed @ an accessible height as per UFAS-Sec 4.34.2(9).
12. In Section 504 Mobility Impaired Unit, depth of the sink bowl shall be no greater than 6½", as per UFAS-sec 4.34.6.5(3)

Notes for Kitchens

KR-2

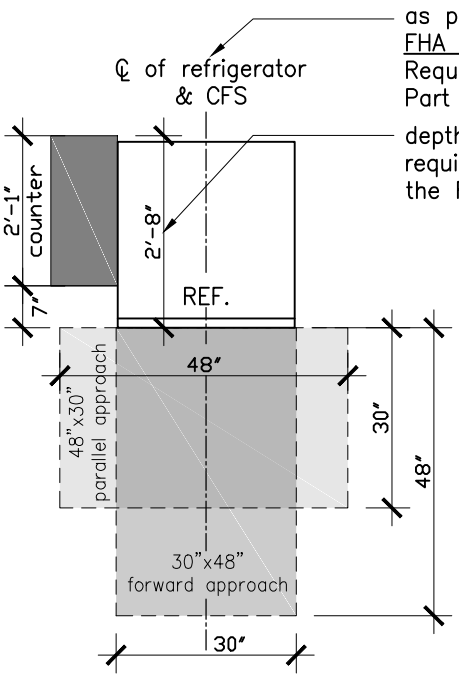

30"x48" CFS for Forward or Parallel Approach to Ref,
As per
1. FHA Requirement 7(1)(a)
2. UFAS–Sec. 4.34.6.2

OR

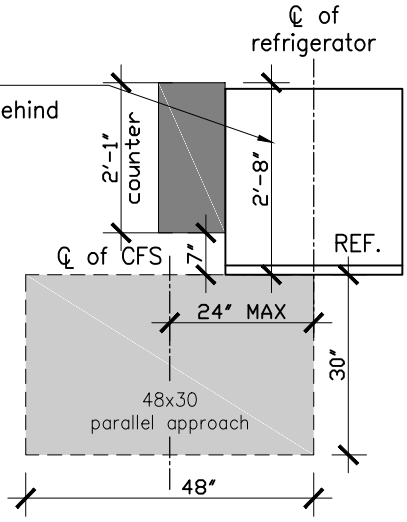

30"x48" CFS for Parallel Approach to Ref,
As per
1. BC–Sec 1107.2.3.3,
ICC–Sec 1003.12.5.6
2. UFAS–Sec. 4.34.6.2

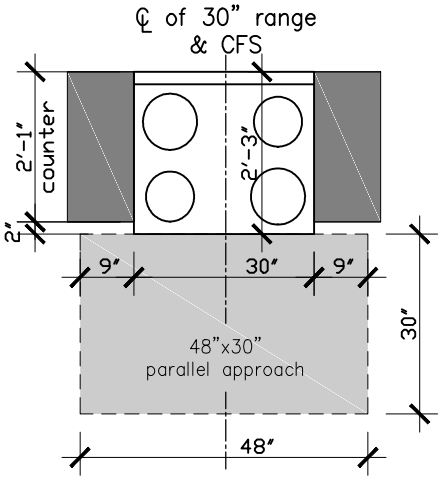

30"x48" CFS for
Parallel Approach to Range,
As per
1. FHA Design Manual–
Requirement 7, Part A, Page 7.4
2. BC–Sec 1107.2.3.4, ICC–Sec
1003.12.5.4.3
3. UFAS–Sec. 4.34.6.2

OR

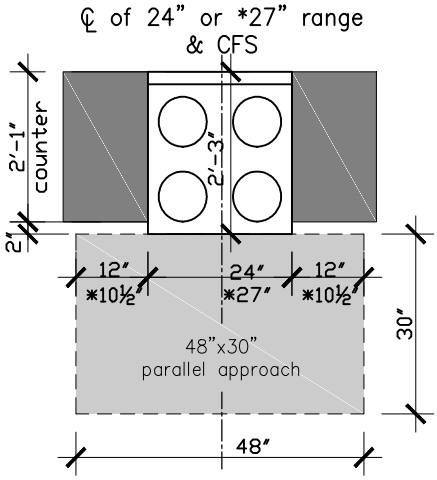

30"x48" CFS for
Parallel Approach to Range,
As per
1. FHA Design Manual–
Requirement 7, Part A, Page 7.4
2. BC–Sec 1107.2.3.4,
ICC–Sec 1003.12.5.4.3
3. UFAS–Sec. 4.34.6.2

Reference Sheet For CFS Requirements for
Refrigerator & Range

KR–3

OPTION 1:

Can be used for

1. Open Strip kitchen
2. Open "L" shaped kitchen
3. "U" shaped kitchen

(where 60" turning space is available or provided)

For Example
See Kitchen Layouts
K–1, K–3 & K–6

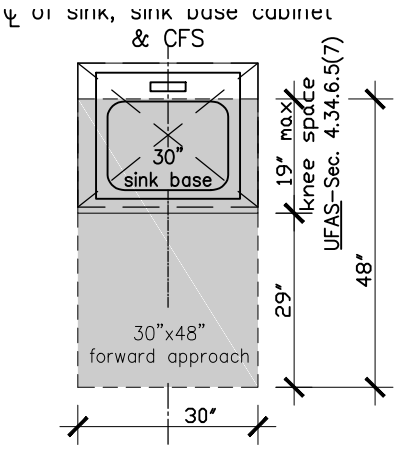

30"x48" CFS for
Forward Approach to Sink,
As per
1. FHA Design Manual
   –Requirement 7, Part A,
   Page 7.11
2. BC–Sec 1107.2.3,

&

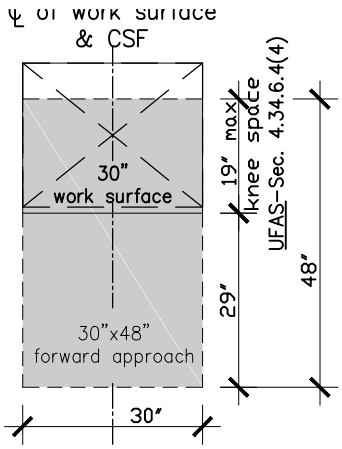

30"x48" CFS for
Forward Approach to WS,
As per
1. BC–Sec 1107.2.3,
   ICC–Sec 1003.12.3.1
2. UFAS–Sec. 4.34.6.4(4)

OPTION 2:

Can be used for

1. Enclosed Strip kitchen
2. Enclosed "L" shaped kitchen
3. "U" shaped kitchen

(where 60" turning space needs to be provided)

This option can also be used for any shape kitchen

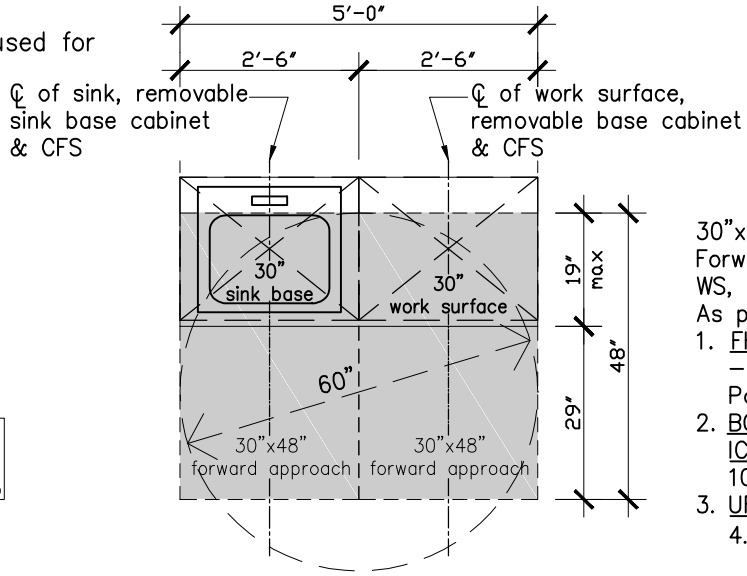

30"x48" CFS for
Forward Approach to Sink &
WS,
As per
1. FHA Design Manual
   –Requirement 7,
   Part A, Page 7.11.
2. BC–Sec 1107.2.3,
   ICC–Sec 1003.12.3.1,
   1003.12.4.1, & 304.3.1
3. UFAS–Sec. 4.34.6.4,
   4.34.6.5, & 4.34.2(2)

For Example
See Kitchen Layouts
K–2, K–4 K–5, K–7 & K–8

Reference Sheet For CFS Requirements for
Kitchen Sink & Work Surface

KR–4

OPTION 3:

Can be used for

1. Galley kitchen (where 60" turning space is not feasible)

This option can also be used for any shape kitchen

For Example
See Kitchen Layout
K–9

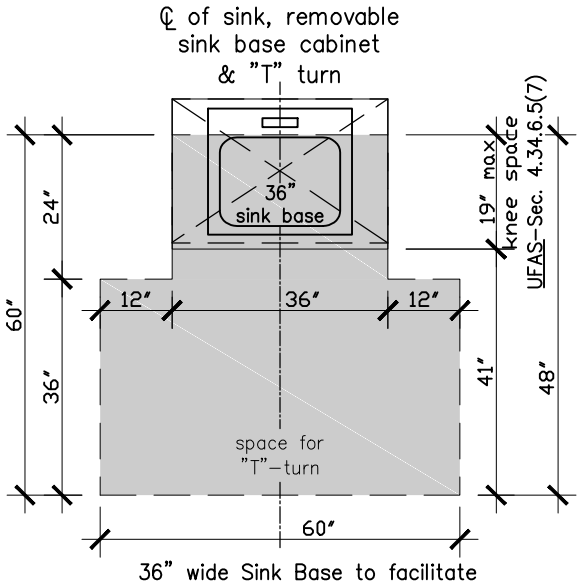

36" wide Sink Base to facilitate a "T" Turn.
As per
1. ICC–Sec 304.3.2 & 1013.3.2
2. UFAS–Sec 4.34.2(2)

&

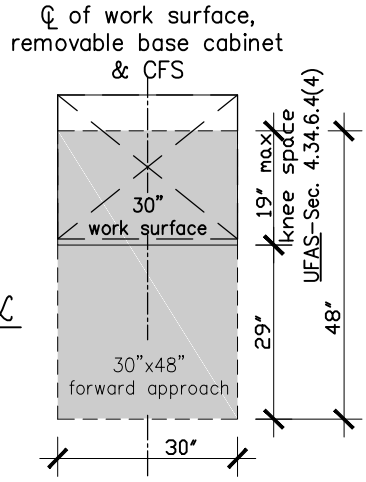

30"x48" CFS for Forward Approach to WS,
As per
1. BC–Sec 1107.2.3,
   ICC–Sec 1003.12.3.1
2. UFAS–Sec. 4.34.6.4(4)

OPTION 4:

Can be used for

1. Galley kitchen (where 60" turning space is not feasible)

This option can also be used for any shape kitchen

For Example
See Kitchen Layout
K–10

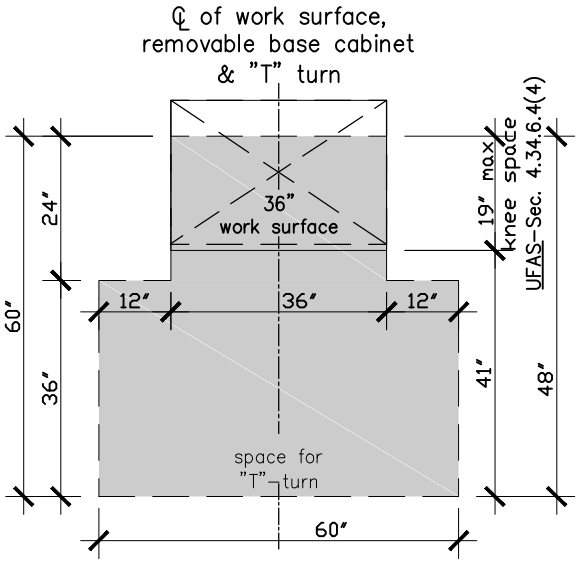

36" wide Base Cabinet Under 36" wide Work surface to facilitate a "T" Turn.
As per
1. ICC–Sec 304.3.2 & 1003.3.2
2. UFAS–Sec. 4.34.2(2)

&

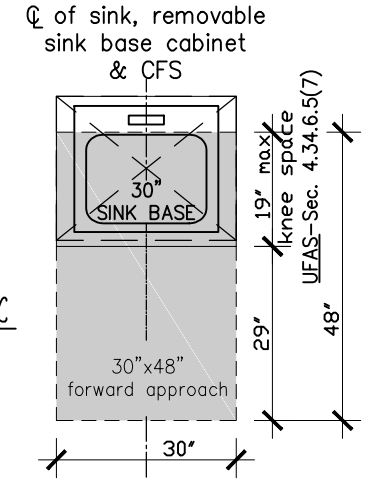

30"x48" CFS for Forward Approach to sink,
As per
1. FHA Design Manual
   –Requirement 7, Part A, Page 7.
2. BC–Sec 1107.2.3,
   ICC–Sec 1003.12.4.1
3. UFAS–Sec. 4.34.6.5(7)

Reference Sheet For CFS Requirements for Kitchen Sink & Work Surface

KR–5

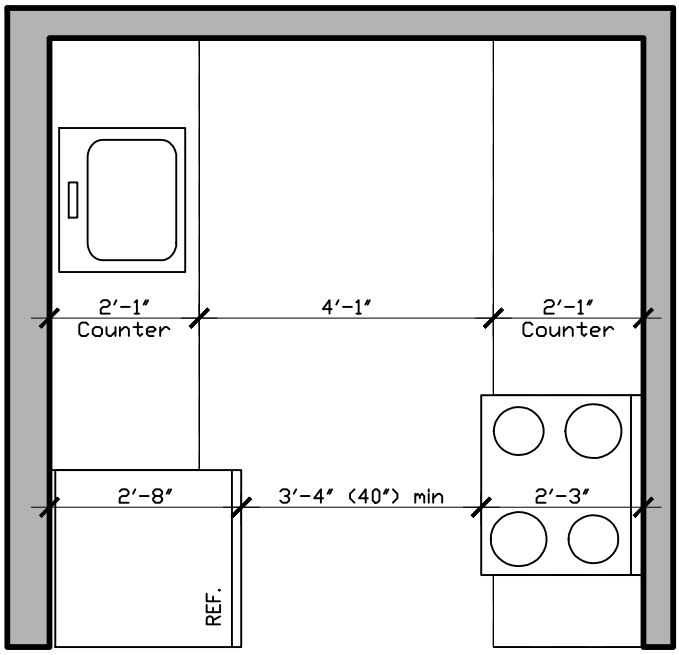

Minimum Kitchen Clearances

Minimum Clearance:

- Clearance between all opposing base cabinets, counter tops, appliances or walls shall be is at least 40" minimum As per
  1. FHA Requirement 7(1)(b)
  2. BC–Sec 1107.2.3,
     ICC–Sec 1003.12.1.1
  3. UFAS–Sec 4.34.6.1

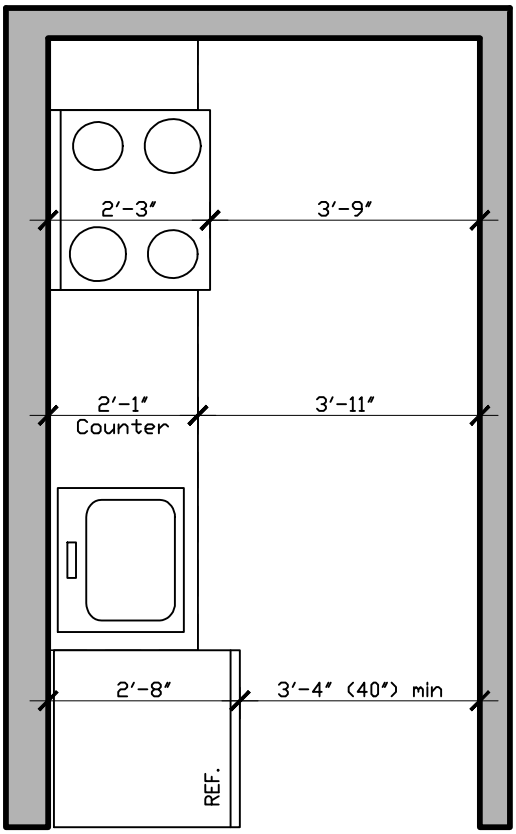

Minimum Kitchen Clearances

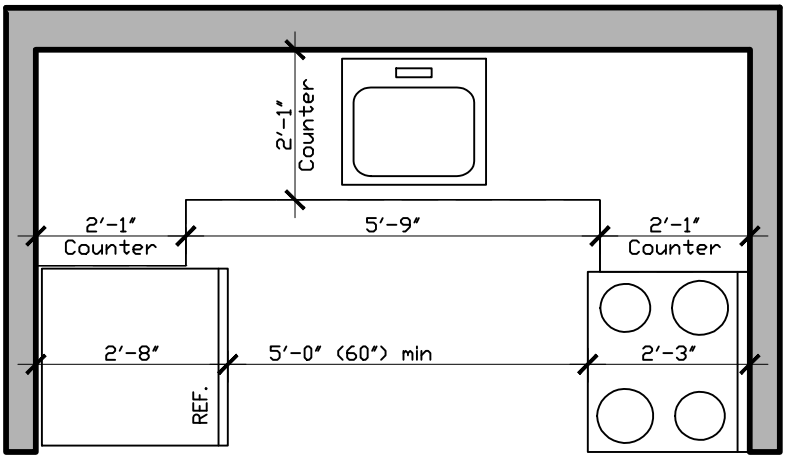

Minimum Clearances in U–Shaped Kitchen

NOTE:
Consider the most protruding element in the kitchen while calculating the clearances

"U" Shaped Kitchens:

- In kitchens with counters, appliances or cabinets on three contiguous sides, Clearance between all opposing base cabinets, counter tops, appliances or walls shall be is at least 40" minimum As per
  1. FHA Requirement 7(1)(c)
  2. BC–Sec 1107.2.3,
     ICC–Sec 1003.12.1.2
  3. UFAS–Sec 4.34.6.1

Reference Sheet for
Minimum Clearance Requirements
for Kitchens

KR–6

Option 1:

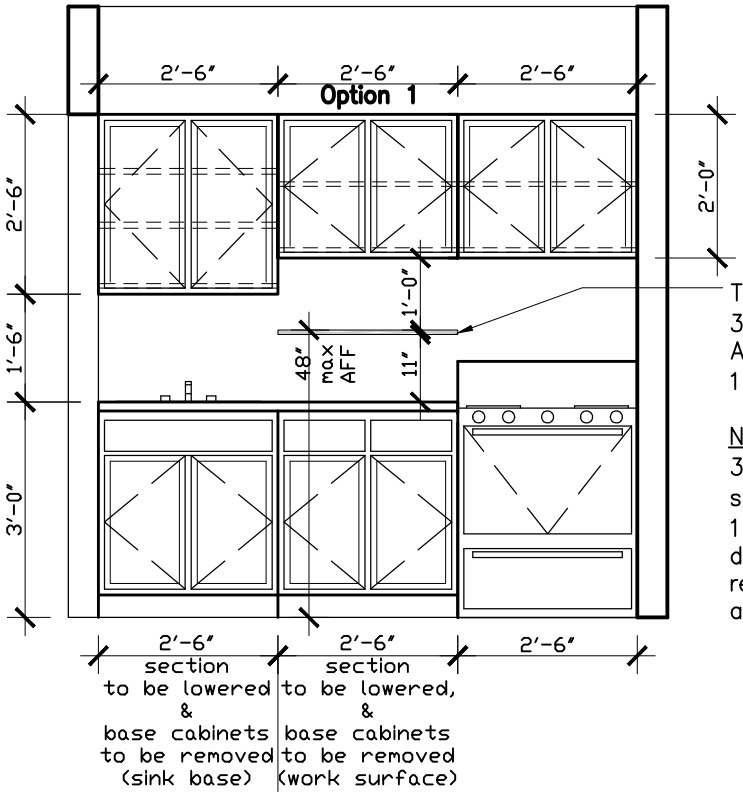

Top of Shelf @ 48" max AFF above 30" wide work surface
As per
1. UFAS–Sec 4.34.6.10(1)

NOTE:
30" wide shelf above 30" wide work surface @ 48" max AFF, with 9" to 12" clear storage height & same depth as wall cabinets, will provide reasonable storage space at an accessible height

Option 2, 3 & 4:

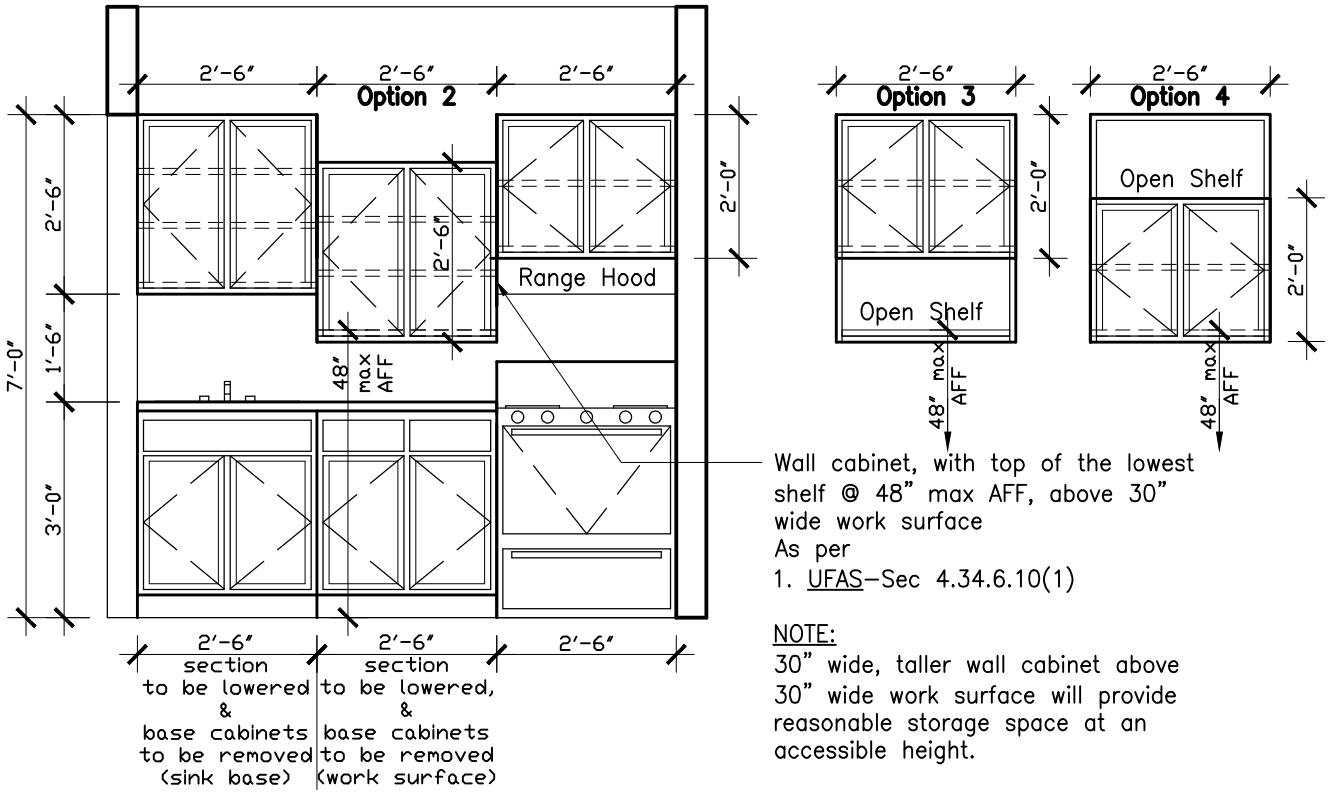

Wall cabinet, with top of the lowest shelf @ 48" max AFF, above 30" wide work surface
As per
1. UFAS–Sec 4.34.6.10(1)

NOTE:
30" wide, taller wall cabinet above 30" wide work surface will provide reasonable storage space at an accessible height.

Elevation of Wall Cabinet or Shelf above Work Surface for Section 504 Mobility Impaired Unit Kitchens; & Removable Base Cabinets Under Sink & Work Surface for all Kitchens

KR–7

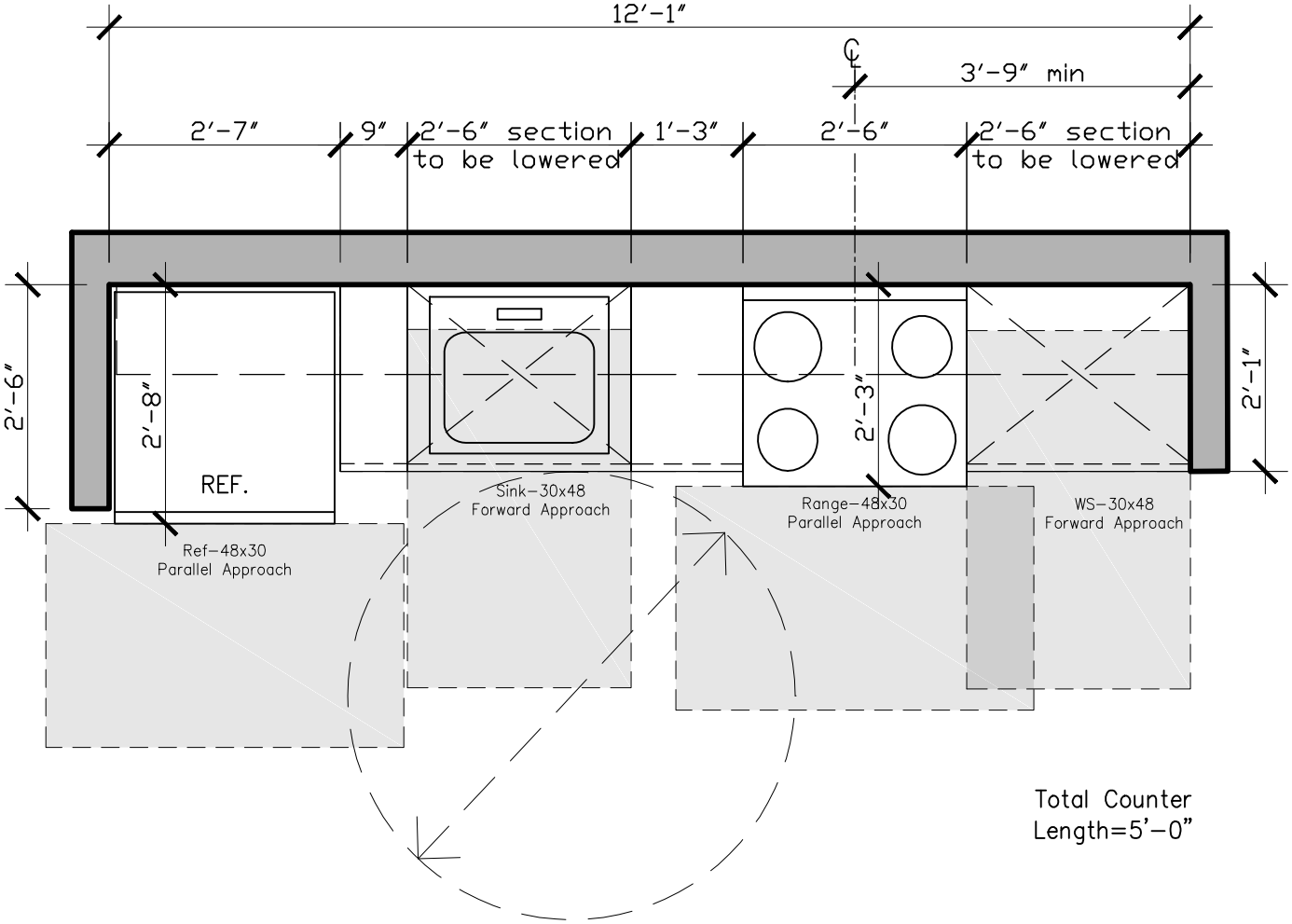

Min. Kitchen Size as per FHA, BC, & UFAS
with 60" Dia Turning Space for
Open Strip Kitchen Layout

K–1

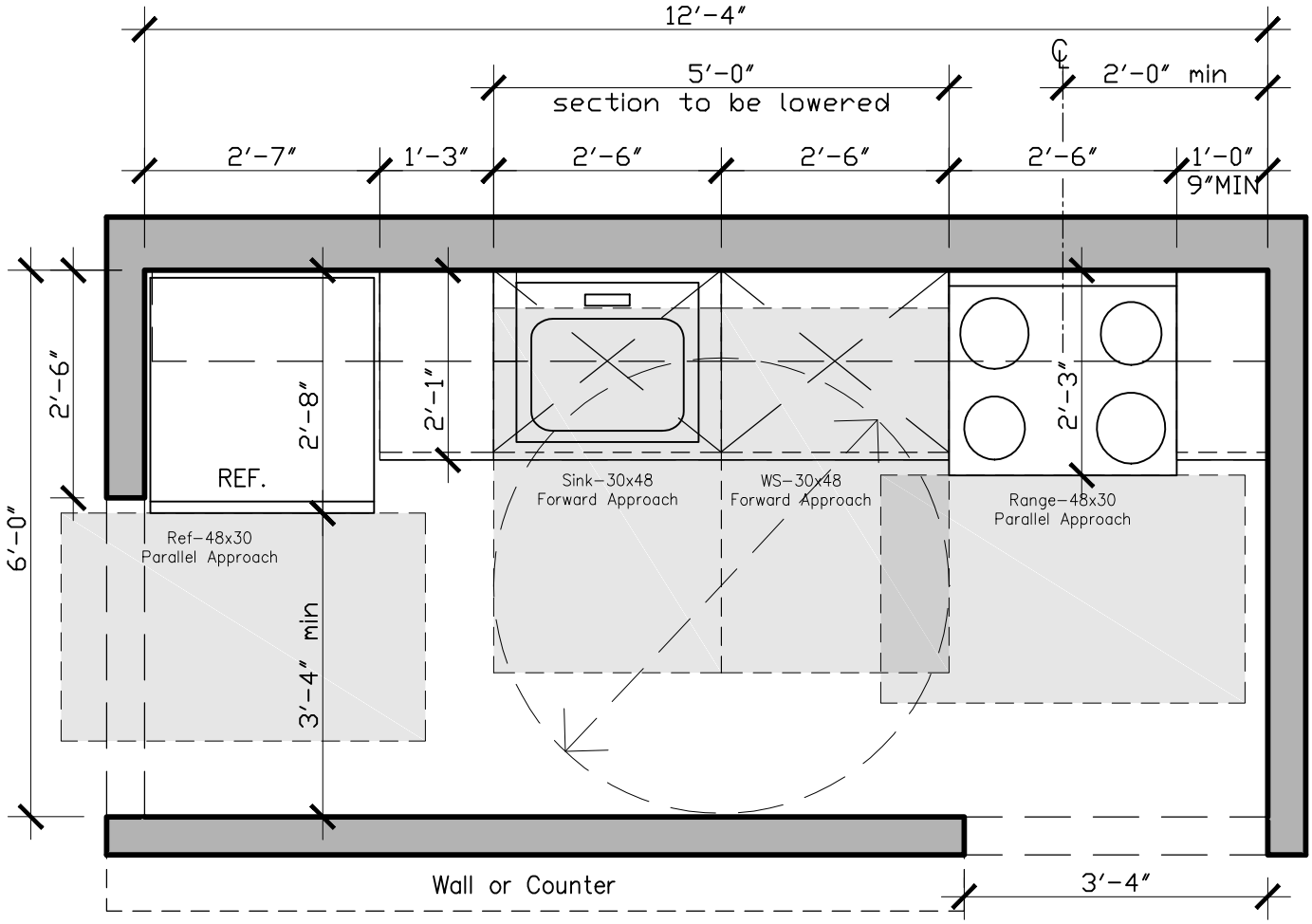

Total Counter
Length=5′-3″

Min. Kitchen Size as per FHA, BC, & UFAS
with 60″ Dia Turning Space for
Enclosed Strip Kitchen Layout

K-2

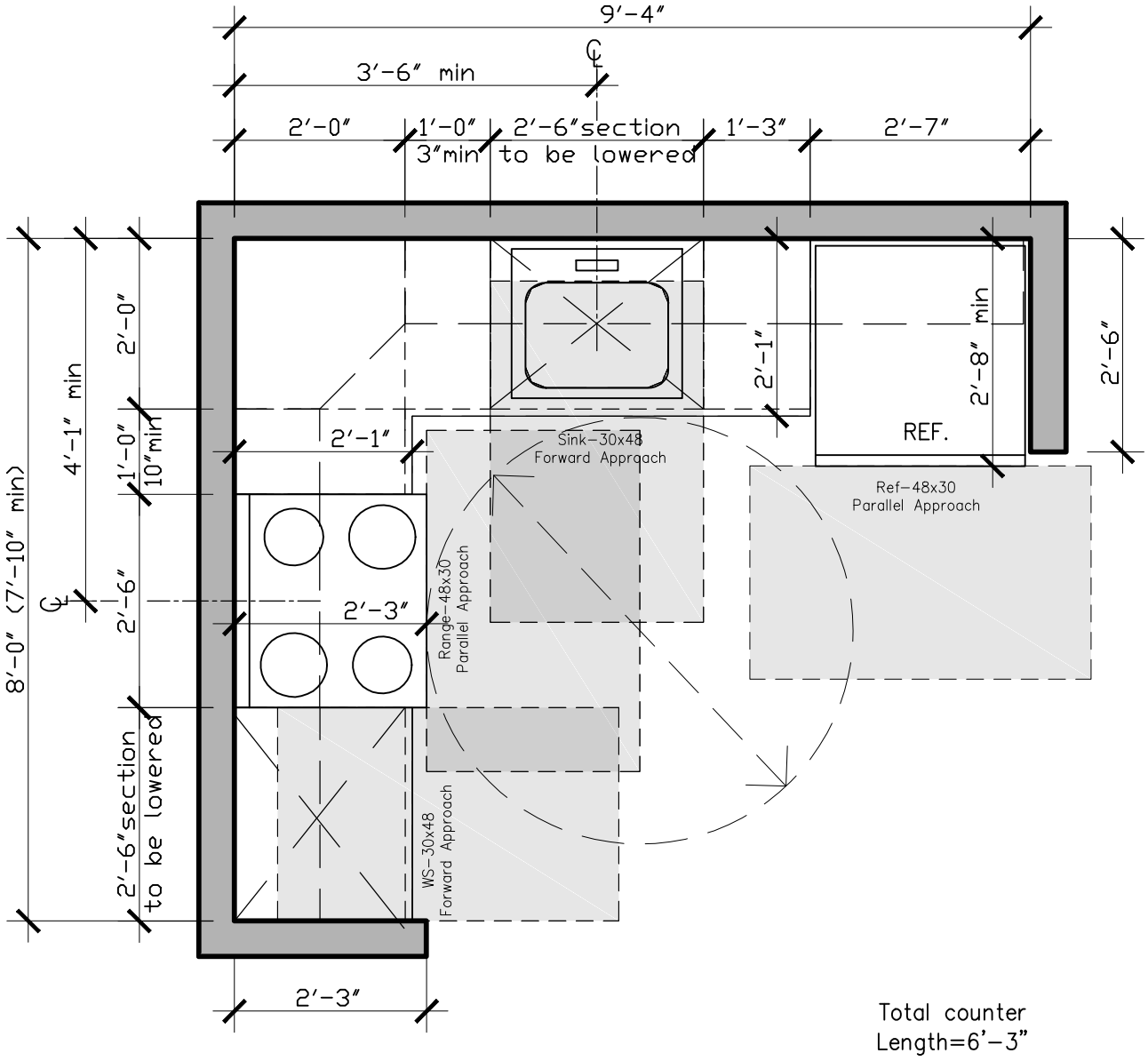

Min. Kitchen Size as per FHA, BC, & UFAS
with 60" Dia Turning Space for
Open "L" Shaped Kitchen Layout

K-3

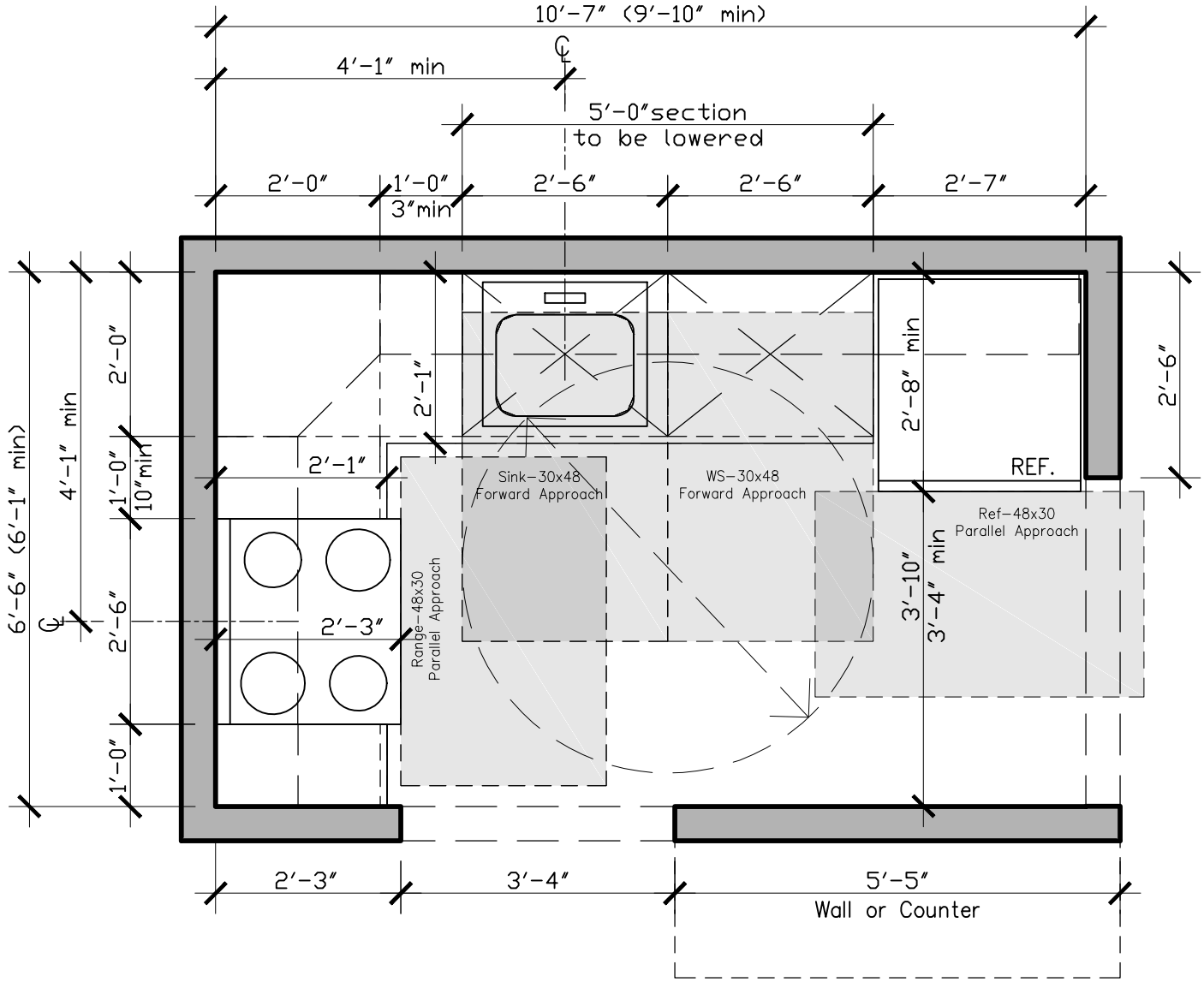

- Total counter Length=6'-0"
- Range shall be self cleaning in

Min. Kitchen Size as per FHA, BC, & UFAS
with 60" Turning Space for
Enclosed "L"Shaped Kitchen Layout

K-4

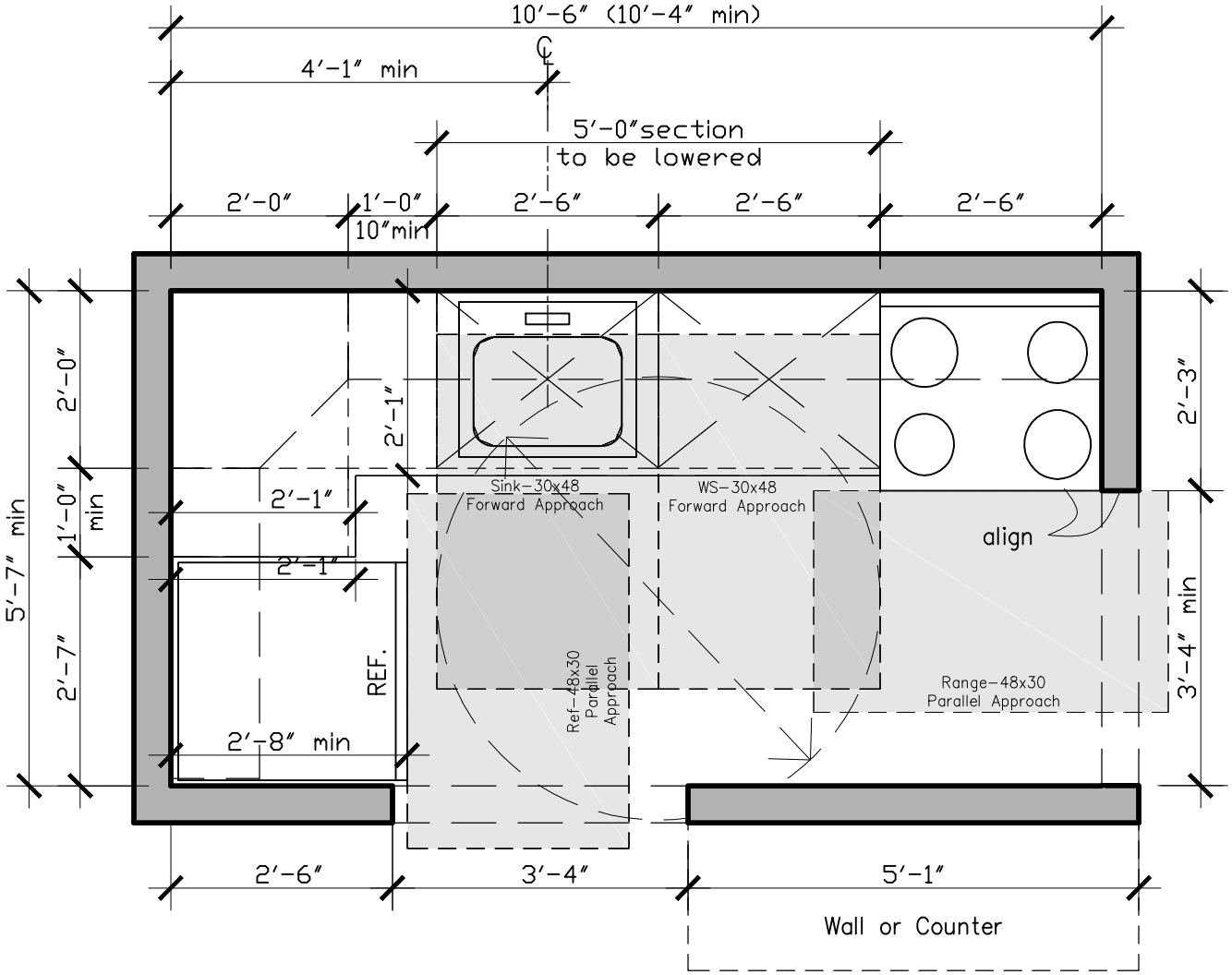

Total counter
Length=5′–0″

Min. Kitchen Size as per FHA, BC, & UFAS
with 60″ Turning Space for
Enclosed "L" Shaped Kitchen Layout

K–5

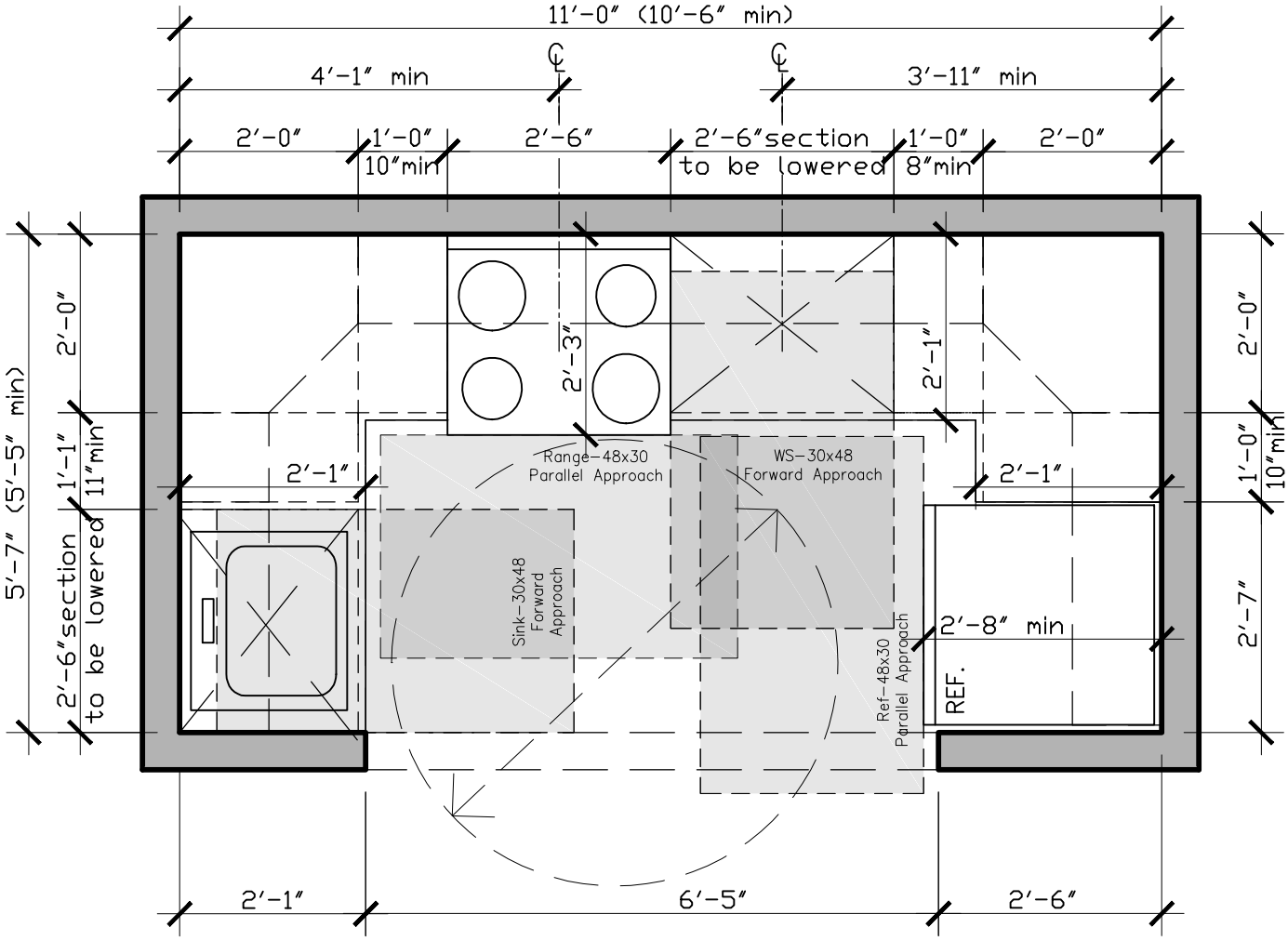

Total counter
Length=7'-0"

Min. Kitchen Size as per FHA, BC, & UFAS
with 60" Dia Turning Space for
"U" Shaped Kitchen Layout

K-6

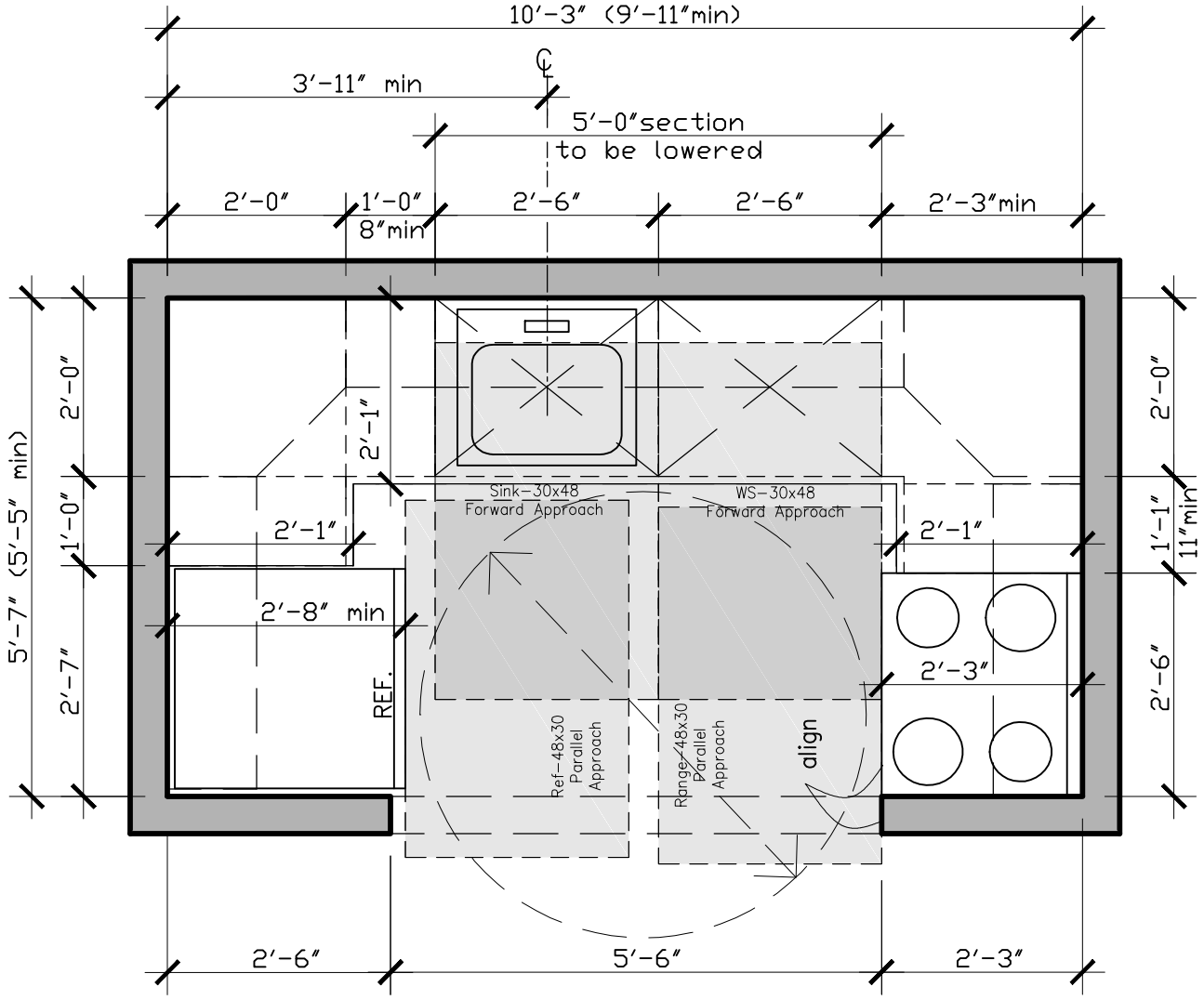

Min. Kitchen Size as per FHA, BC, & UFAS
with 60" Dia Turning Space for
"U" Shaped Kitchen Layout

K–7

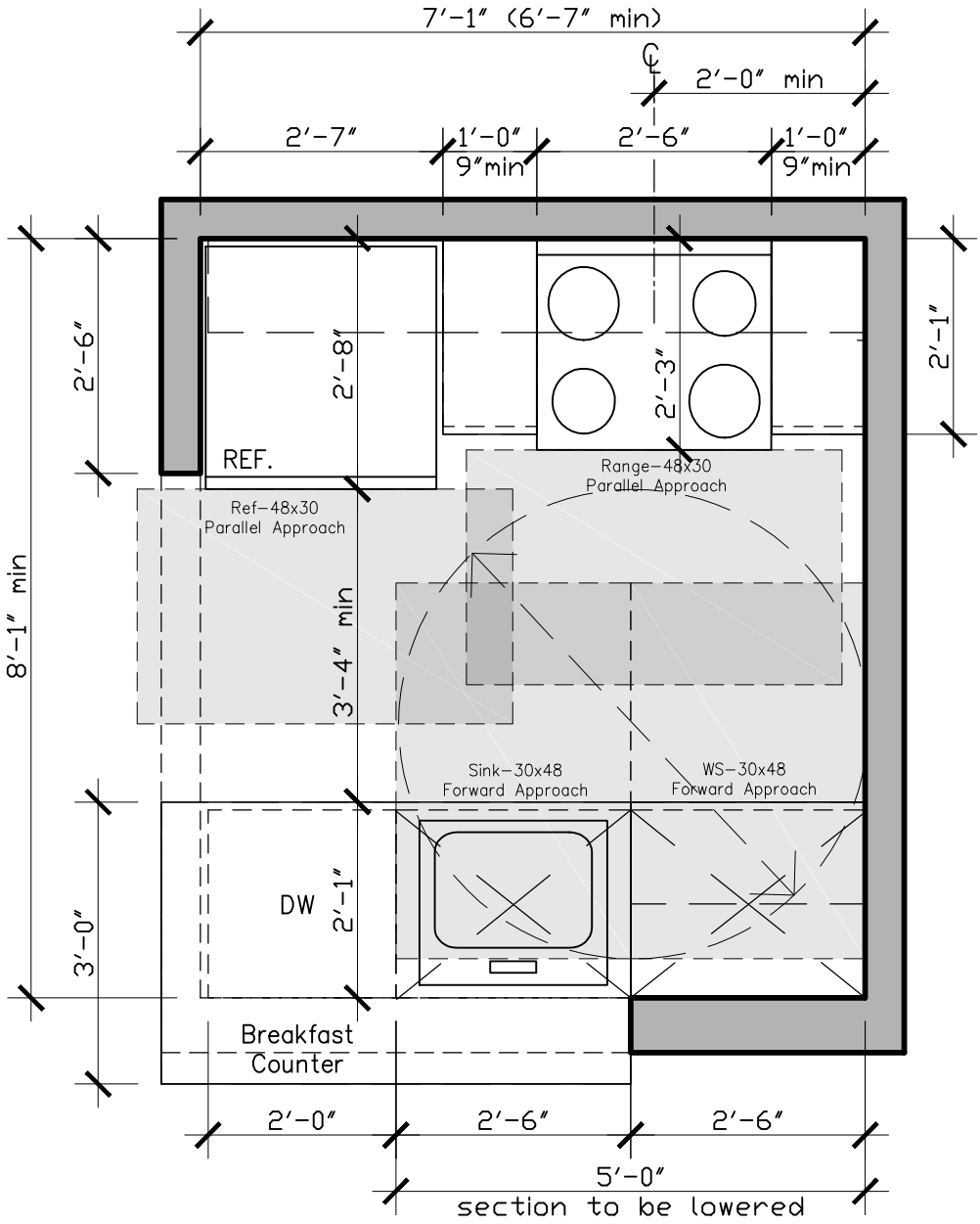

Total counter
Length=9′-6″

Min. Kitchen Size as per FHA, BC, & UFAS
with 60″ Dia Turning Space for
Galley Kitchen Layout

K-8

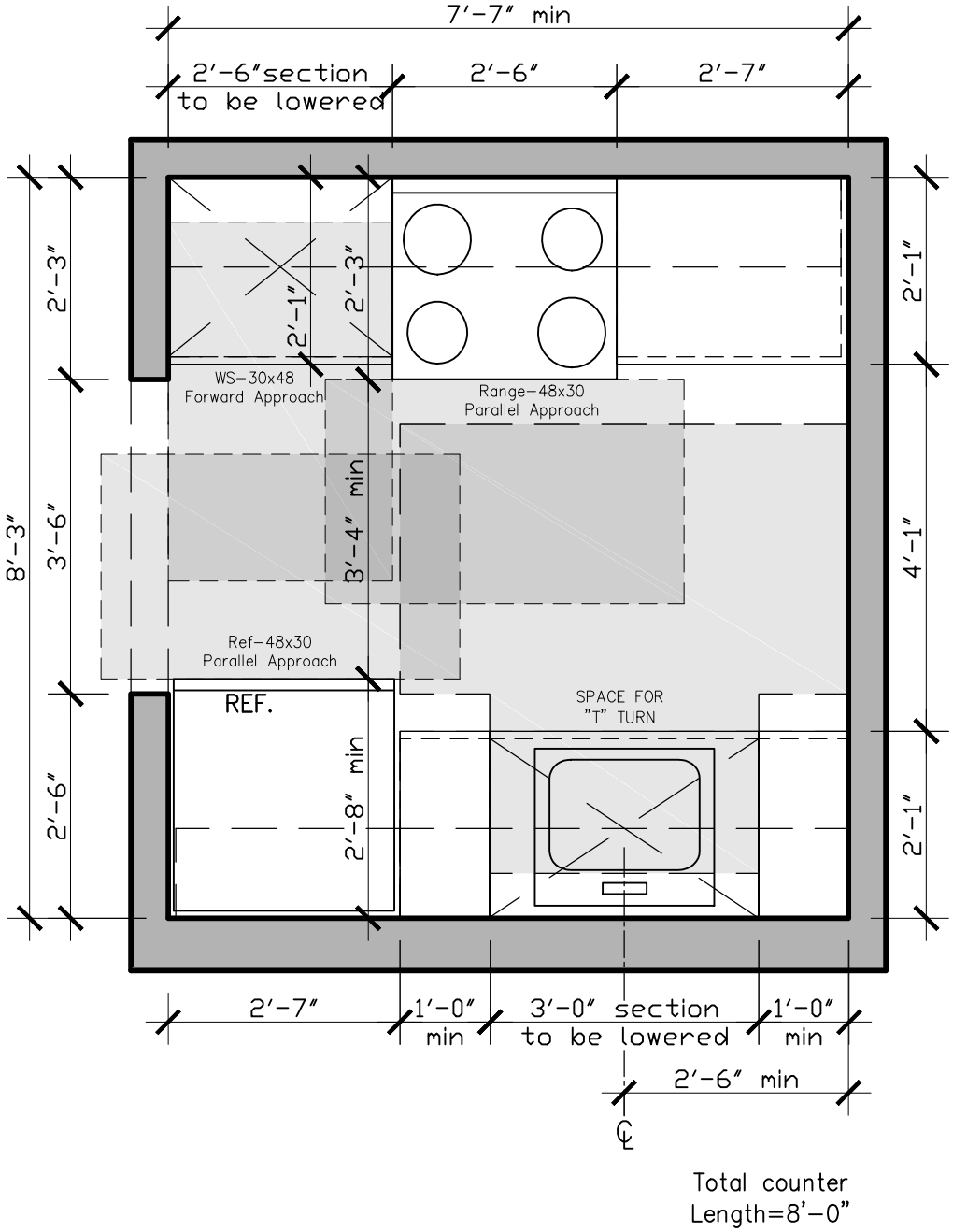

Total counter
Length=8'-0"

Min. Kitchen Size as per FHA, BC, & UFAS
with "T" Shaped Turning Space Under the SC for
Galley Kitchen Layout

K-9

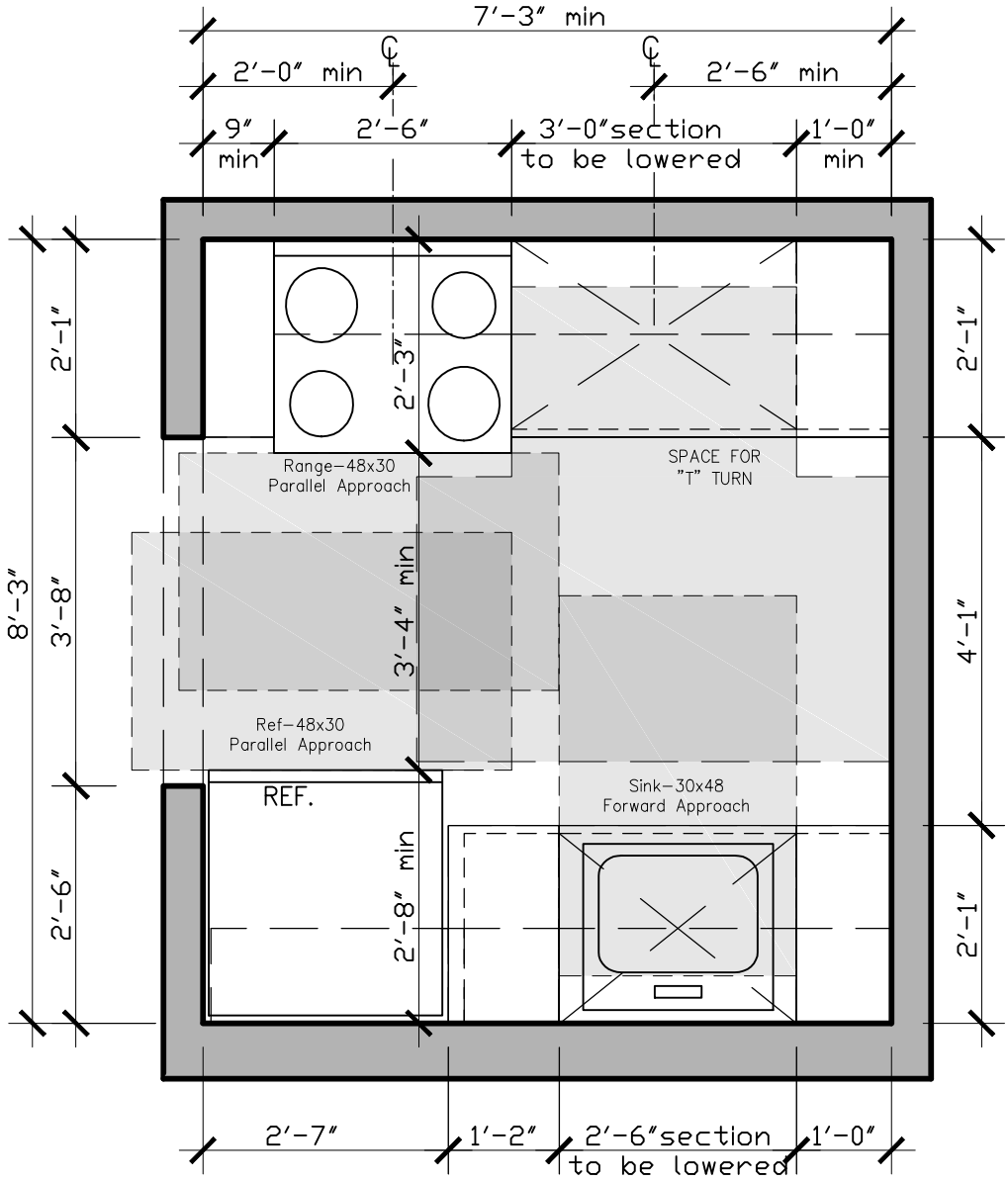

Total counter
Length 8'–0"

Min. Kitchen Size as per FHA, BC, & UFAS
with "T" Shaped Turning Space Under the WS for
Galley Kitchen Layout

K–10

ABBREVIATIONS:

ADA	The Americans with Disabilities Act–2010 ADA Standards
AFF	Above Finished Floor
ANSI	American National Standards Institute–ANSI/A117.1–1986
B	Full Bathroom Layout Sheet with Lav, WC & Tub (Ex B–1)
BC	2014 New York City Building Code
BR	Bathroom Reference Sheet (Ex BR–1)
℄ of VGB	Centerline Of Vertical Grab Bar
CFS	Clear Floor Space
Dia	Diameter
DMC	Door Maneuvering Clearance
FHA	Fair Housing Act
Fig	Figure
GB	Grab Bar
HB	Half (½) Bath Reference Sheet with Lav & WC only (Ex HB–1)
ICC	International Code Council –ICC/A117.1–2009
Lav	Lavatory
max	Maximum
min	Minimum
NYC	New York City
PT	Common/Public Single–User Toilets Reference Sheet with Lav & WC Only (Ex PT–1)
Sec	Section or Reference Section
TPH	Toilet Paper Holder
UFAS	Uniform Federal Accessibility Standards
WC	Water Closet

LEGEND

VGB	Vertical Grab Bar
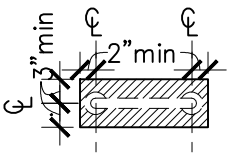	Grab Bar (GB) & Reinforcement: In Elevation
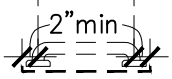	Grab Bar (GB) & Reinforcement: In Plan
	Direction of Approach to the Water Closet (WC)
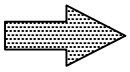	Direction of Approach to the Door
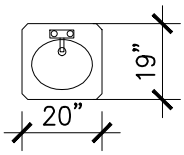	Wall–hung Lavatory
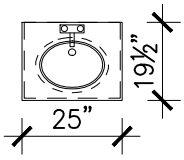	Countertop with Drop–in Lavatory

Abbreviations & Legends

BR–1

NOTES:

1. Section 504 Mobility Impaired Unit (5% of total units) bathrooms shall comply with UFAS, BC & FHA. All the rest including Section 504 Hearing/Visual Impaired Unit (2% of total units) bathrooms shall comply with BC & FHA.
2. Please keep in mind that selected Safe Harbor for FHA compliance may effect these layouts.
3. The width and length of bathroom and half–bath may change depending on the size of lavatory or countertop with drop–in lavatory; Depth of the water closet; Width of the toilet bowl; Width & Depth of the toilet tank; Size & Location of the grab bars; Size & Location of surface–mounted TPH
4. Lavatory is assumed to be 20" wide & 19" deep; Countertop to be 25" wide & 19½" deep with removable vanity to be 24" wide & 19" deep.
5. Depth of water closet is assumed to be 30"; Width of the toilet bowl is assumed to be 14½"; Width & Depth of the toilet tank to be 20" & 10" respectively.
6. Surface Mounted TPH is assumed to be 6¼" wide & 6" deep.
7. Diameter of the escutcheon for the grab bars is assumed to be 3".
8. Roll–in shower shall not have more than 1:50 (2% max) pitch as shower area is used for 60" Dia turning space &/or DMC.
9. As per UFAS–Sec 4.34.5.1, doors shall not swing into CFS required for any fixture.
10. All dimensions are from finished wall surface, including wall tiles.

Bathroom Notes

BR–2

Scenario 1

BC Compliant Adaptable Unit or
Section 504 Hearing/Vision Impaired Unit With 1 Bath

Appendix "P" Compliant Full Bath	Shall comply with: 1. Appendix "P" as per BC–Sec 1107.2.2 **Use Layouts B–1a to B–5b**

Scenario 2

Section 504 Mobility Impaired Unit with 1 Bath

UFAS & Appendix "P" Compliant Full Bath	Shall comply with: 1. UFAS–Sec 4.34.5 2. Appendix "P" as per BC–Sec 1107.2.2 **Use Bathroom Layouts B–11a to B–15**

Scenario 3

BC Compliant Adaptable Unit or Section 504 Hearing/Vision Impaired Unit With 2 or more Bathrooms
One Full Bath; plus either a full Bath or HB

Appendix "P" Compliant Full Bath	Shall comply with: 1. Appendix "P" as per BC–Sec. 1107.2.2 **Use Layouts B–1a to B–5b**

Appendix "P" Compliant Full Bath or HB	Shall comply with: 1. Appendix "P" as per BC–Sec 1107.2.2 **Use Layouts B–1a to B–5b / HB–1a to HB–5b**

Scenario 4

Section 504 Mobility Impaired Unit with 2 or more Bathrooms
One Full Bath; plus either a full Bath or HB

4a

UFAS & Type "A" of ICC Compliant Full Bath	Shall comply with: 1 UFAS–Sec 4.34.5 2. Type "A" of ICC–Sec 1003.11, as per BC–Sec 1107.2.2, Exception 1 **Use Layouts B–21a to B–26b**

Must comply with Type"A" as it is more stringent than UFAS

Indicated Sec. of ICC Compliant Full Bath or HB	Shall comply with: 1. Following Sections of ICC as per BC–Sec. 1107.2.2, Exception 2 • Sec 1004.3 • Sec 1004.4 • Sec 1004.5.2 • Sec 1004.9 • Sec 1004.11.1 • Sec 1107.2.1, Exception 5 **Use Layouts B–31 to B–33 / HB–11 to HB–15**

If this is a HB, then no reinforcement for grab bar @ WC is required.

4b

UFAS Compliant Full Bath	Shall comply with: 1 UFAS–Sec 4.34.5 **Use Bathroom Layouts B–11a to B–15**

Appendix "P" Compliant Full Bath or HB	Shall comply with: 1. Appendix "P" as per BC–Sec 1107.2.2 **Use Bathroom Layouts B–1a to B–5b / HB–1a to HB–5b**

NOTES:

1. All Bathrooms shall also comply with FHA.

Accessibility/Adaptibility Reference
Requirements for Baths & Half (½) Baths
in Dwelling Units

BR–3

NOTES:

1. If multiple single–user toilets, for public or common use, are clustered to be within sight of, or adjacent to one another at a single location at least 50%, but not less than one for each use at each cluster shall be accessible:
   As per
   - BC–Sec 1109.2, Exception(3)
   - ADA–Sec 213.2, Exception(4)

2. Where toilet rooms are provided for common use of residents or for public use, at least one fixture of each type provided must be accessible per room.:
   As per
   - FHA Guidelines, Item #11 of the chart of Requirement 2 in Section 5

3. If toilet facilities are provided, then each public use and common use toilet room shall be accessible:
   As per
   - UFAS–Sec 4.1.2(10)

Scenario 1

Cluster of toilets for Common Use:

FHA, BC, & UFAS Compliant

First 50% or at least one min

Shall comply with:

1. ANSI–Sec 4.22
2. ICC–Sec 604 & 606
3. UFAS–Sec 4.22

Use Layouts PT–1 to PT–6

ANSI & UFAS Compliant

The Remaining

Shall comply with:

1. ANSI–Sec 4.22
2. UFAS–Sec 4.22

Use Layouts PT–11 & PT–12

Scenario 2

Cluster of toilets for Public Use:

FHA, BC, UFAS & ADA Compliant

First 50% or at least one min

Shall comply with:

1. ANSI–Sec 4.22
2. ICC–Sec 604 & 606
3. UFAS–Sec 4.22
4. ADA–Sec 604 & 606

Use Layouts PT–1 to PT–6

ANSI & UFAS Compliant

The Remaining

Shall comply with:

1. ANSI–Sec 4.22
2. UFAS–Sec 4.22

Use Layouts PT–11 & PT–12

Accessibility Reference Requirements for Common/Public Single–User Toilet Rooms

BR–4

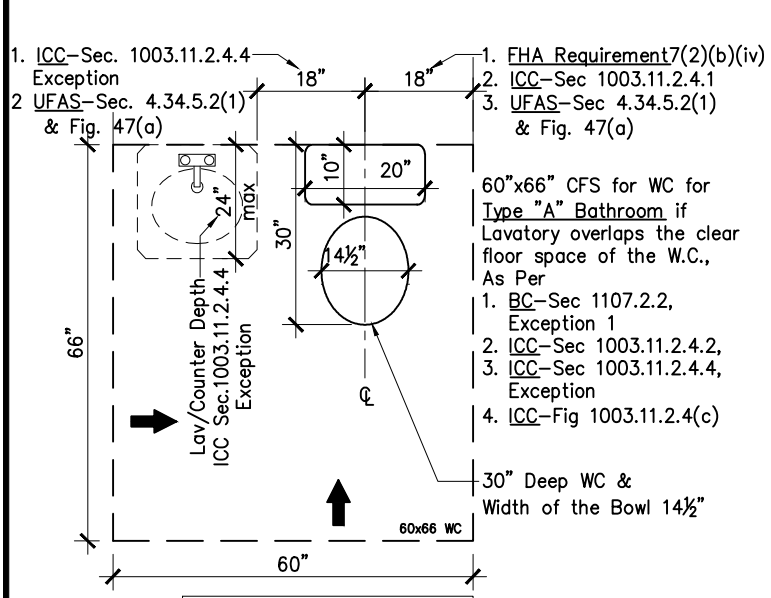

60"x66" CFS Forward or Side Approach for Type "A" Bathroom

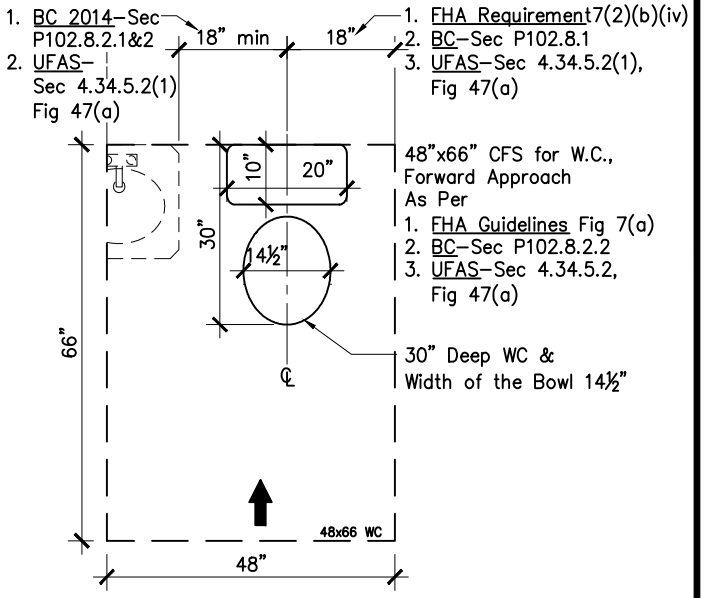

48"x66" CFS Forward Approach

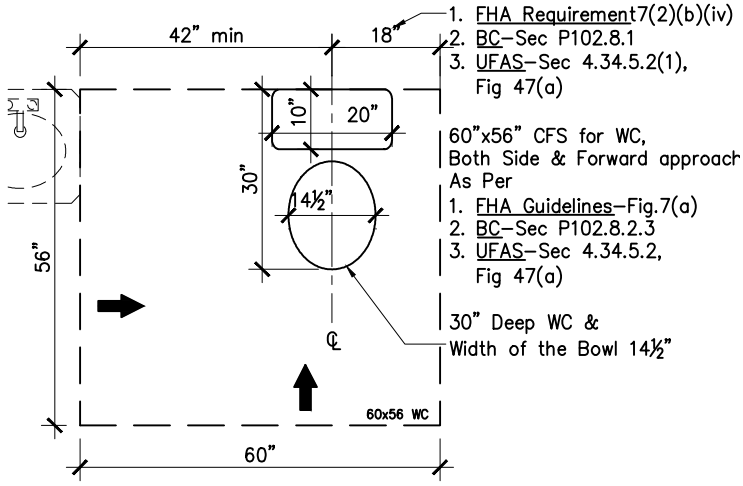

60"x56" CFS Forward or Side Approach

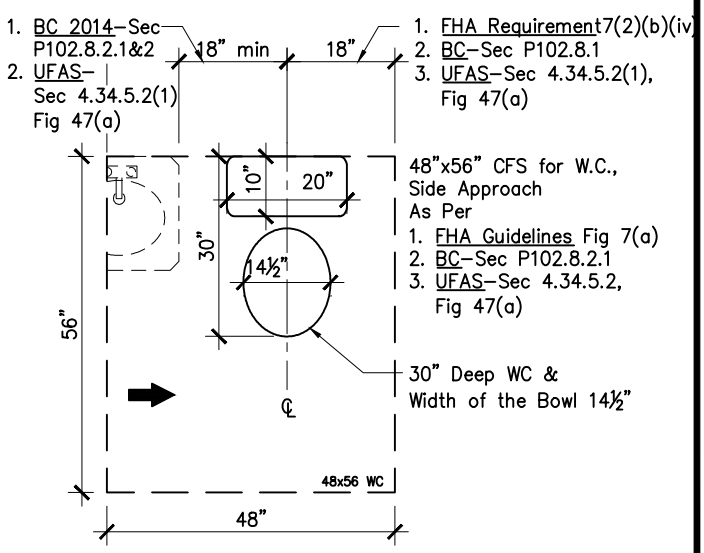

48"x56" CFS Side Approach

Reference Sheet for
CSF Requirements for WC
within the Dwelling Unit Bathroom

BR–5

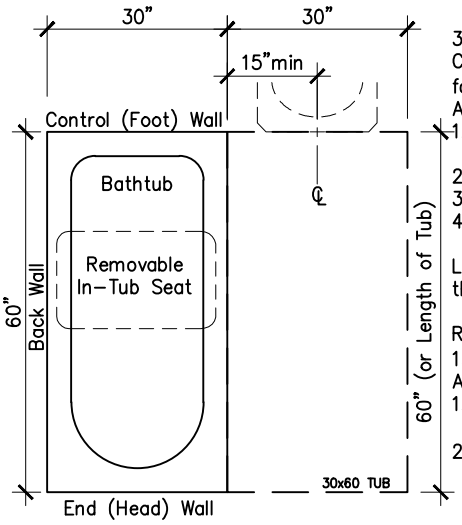

30"x60"(or length of tub) CFS for Tub for Type "A" Bathroom, As Per
1. BC–Sec 1107.2.2, Exception 1
2. ICC–Sec 1003.11.2.5.1
3. ICC–Fig 1003.11.2.5.1
4. ICC–Sec 607.2

Lavatory shall not overlap the CFS of the Tub.

Removable In–Tub Seat, 15"min to 16"max in depth As Per
1. BC–Sec P102.9.1 & ICC–Sec 607.3 & 610
2. UFAS–Sec 4.34.5.4(2), Fig 33(a)

30"x60" CFS for Type "A" Bathroom

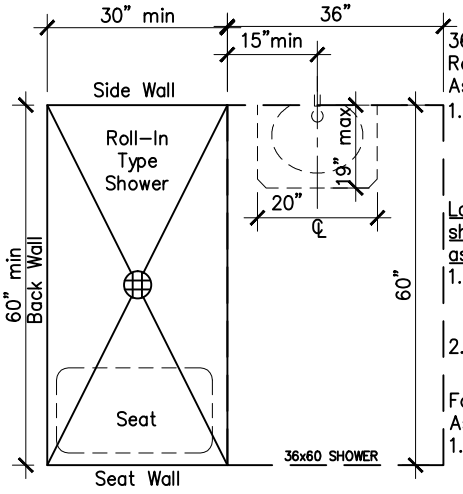

36"x60" min CFS for 30"x60" Roll–in Type Shower As Per
1. UFAS–Sec 4.34.5.5(1), Fig 35(b)

Lav shall be permitted as shown as per
1. BC–Sec P102.9.2, ICC–Sec 608.2.2.2,Exceptio & ICC–Fig 1003.11.2.5.2
2. UFAS–Fig 35(b)

Folding Shower Seat, As Per
1. BC–Sec P102.9.2.1 & ICC–Sec 608.2.2.3 & 610.3.1

36"x60" CFS

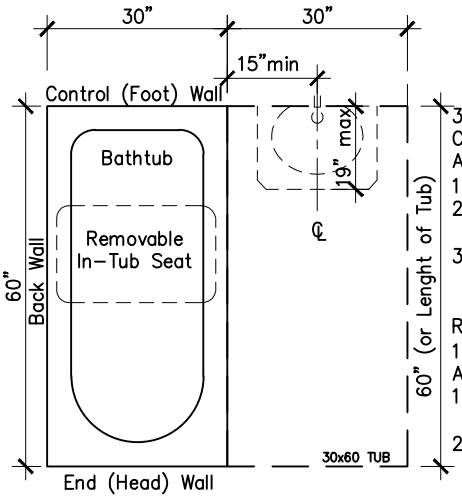

30"x60"(or length of tub) CFS for Tub As Per
1. FHA Guidelines Fig 7(b)
2. BC–Sec P102.9.1, & ICC–Sec 607.2
3. UFA–Sec 4.34.5.4(1), Fig 33(a)

Removable In–Tub Seat, 15"min to 16"max in depth As Per
1. BC–Sec P102.9.1 & ICC–Sec 607.3 & 610.2
2. UFAS–Sec 4.34.5.4(2), Fig 33(a)

30"x60" CFS

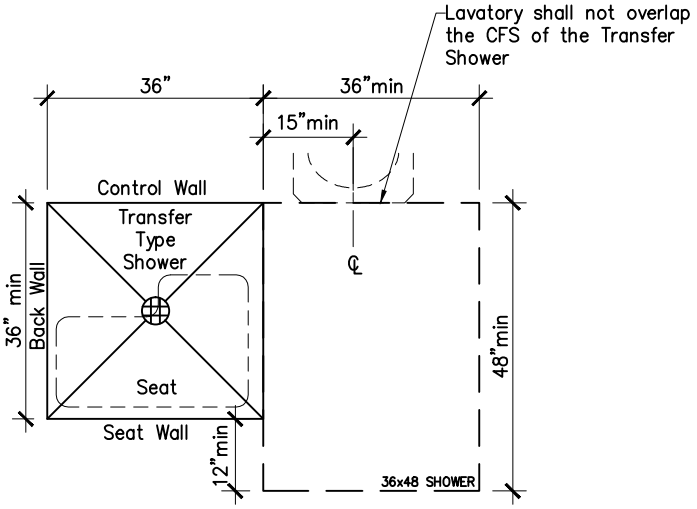

Transfer Shower Seat, As Per
1. BC 2014–Sec P102.9.2.1 & ICC–Sec 607.3 & 610.3.2
2. UFAS–Sec 4.34.5.4(2), Fig 35(a) & 36

36"x48" min CFS for 36"x36" Transfer Shower As Per
1. BC 2014–Sec P102.9.2 & ICC–Sec 608.2.1
2. UFAS–Sec 4.34.5.5, Fig 35(a)

36"x48" CFS

Reference Sheet for
CFS Requirement for Bathtubs & Showers
within the Dwelling Unit Bathroom

BR–6

Countertop with Drop-in Lavatory

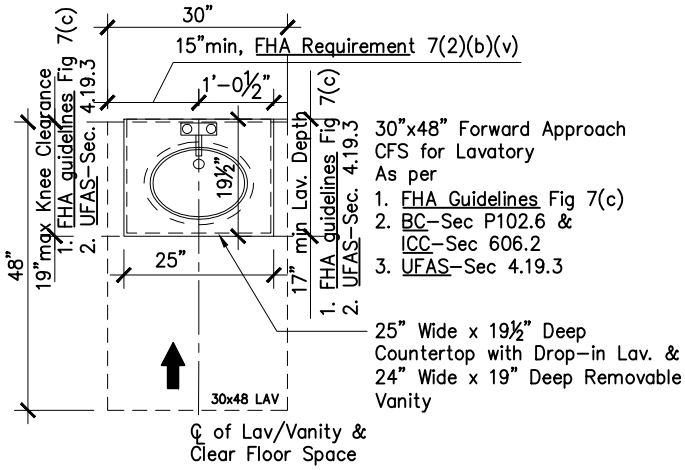

30"x48" CFS Forward Approach

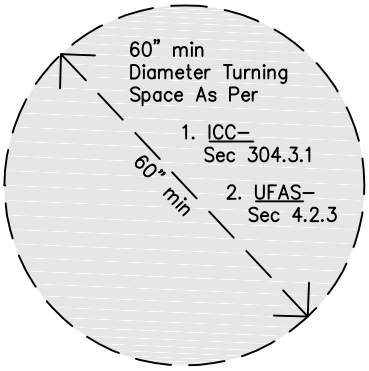

60" Dia Space for 180° Turn

Wall-hung Lavatory

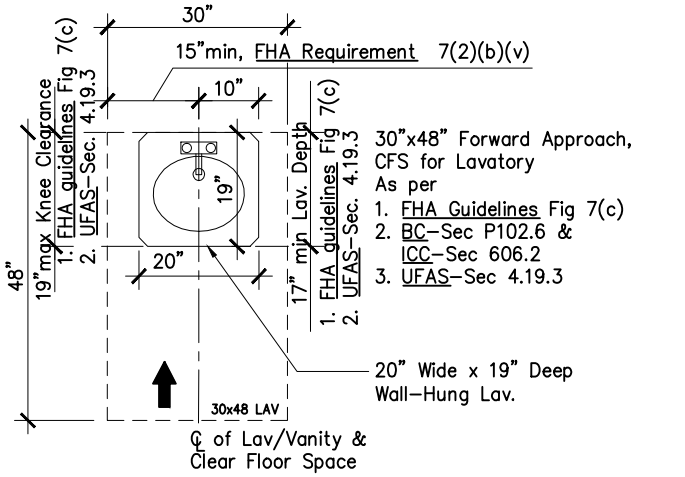

30"x48" CFS Forward Approach

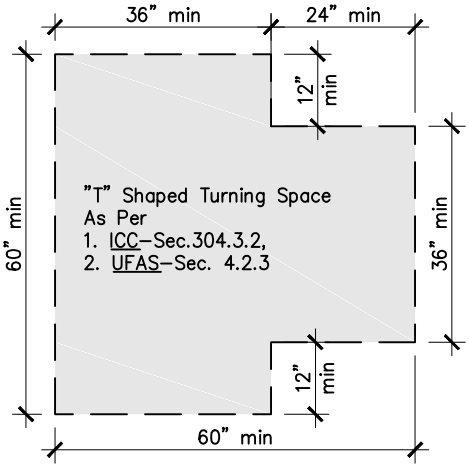

"T" Shaped Space for 180° Turn

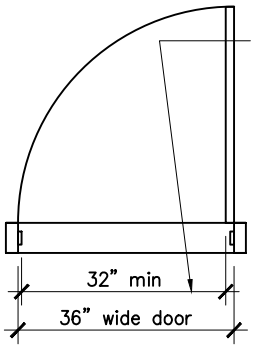

32" min Clear Opening Width As Per
1. BC-Sec 1107.2.1 & ICC-Sec 1003.5 & 404.2.2
2. UFAS-Sec 4.13.5

DMC Requirements
1. Appendix "P" Bathrooms / HB -Only outside
2. Type "A" and Section 504 Mobility Impaired bathrooms -both inside & outside
3. As per ICC-Sec 404.2.3 required DMC shall not include knee & toe clearance

Clear Opening Width at Bathroom Door

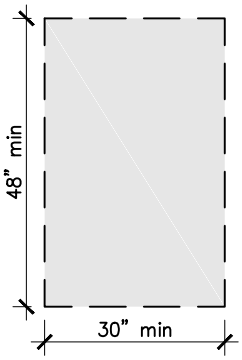

30"x48" CFS As Per
1. FHA Guidelines-Fig 6
2. ICC-Sec 305.3.
3. UFAS-Sec 4.2.4.1

30"x48" CFS is required beyond the arc of the door swing for dwelling unit bathroom As Per
1. FHA Requirement-7(2)(b)(i)
2. ICC-Sec P102.3 Exception
3. 2010 ADA-Sec 603.2.3, Exception 2

30"x48" CFS

Reference Sheet for Maneuvering Clearances for Wall-hung Lavatory & Countertop with Drop-in Lavatory within the Dwelling Unit Bathroom; 180 degree Turning Spaces & Clear Floor Space for Wheelchair; & Minimum Clear Opening at Bathroom Door

BR-7

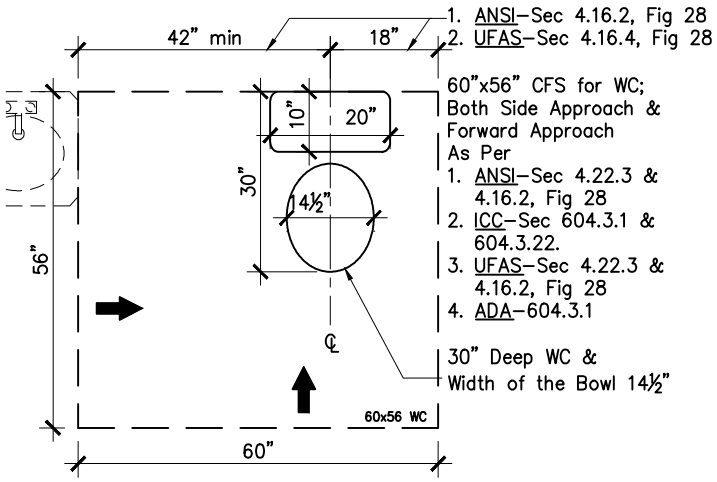

60"x56" CFS Forward or Side Approach

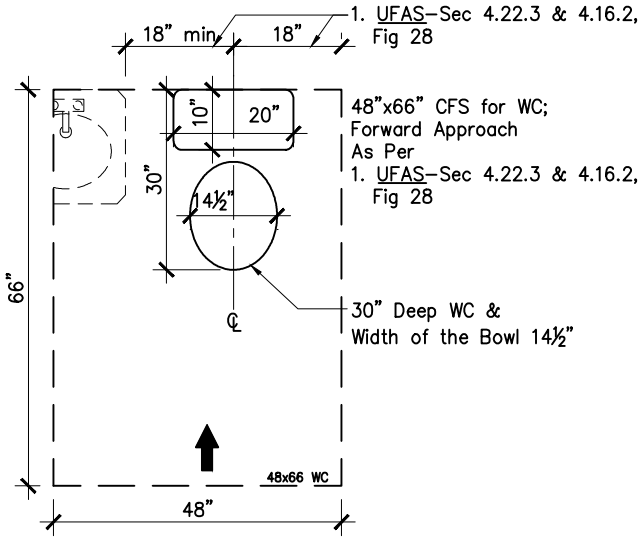

48"x66" CFS Forward Approach

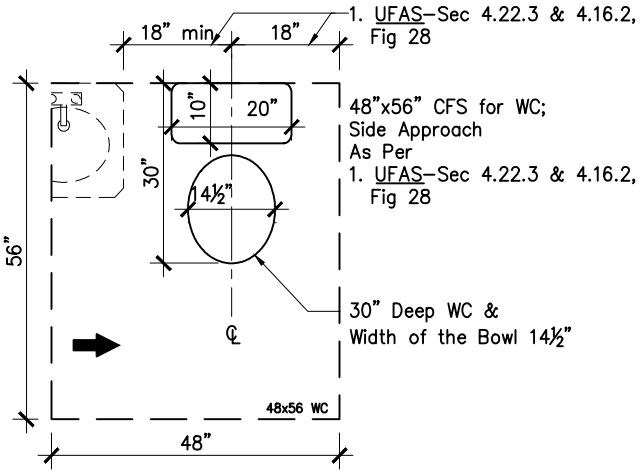

48"x56" CFS Side Approach

Reference Sheet for
CFS Requirements for WC
in Common/Public Single–User Toilet Rooms

BR–8

Countertop with Drop-in Lavatory

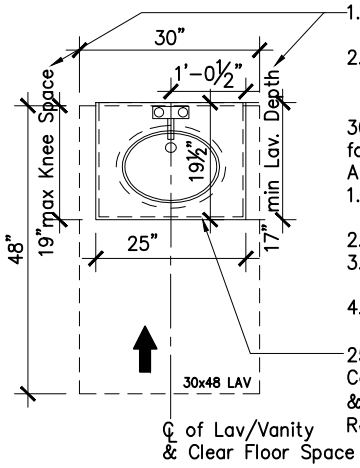

1. ANSI–Sec 4.22,3, & 4.19.3, Fig 31 & 32
2. UFAS–Sec 4.22,3, & 4.19.3, Fig 31 & 32

30"x48" Forward Approach CFS for Lavatory
As per
1. ANSI–Sec 4.22,3, & 4.19.3, Fig 32
2. ICC–Sec.606.2
3. UFAS–Sec 4.22,3, & 4.19.3, Fig 32
4. ADA–Sec 606.2

25" Wide x 19½" Deep Countertop with Drop-in Lav. & 24" Wide x 19" Deep Removable Vanity

30"x48" CFS Forward Approach

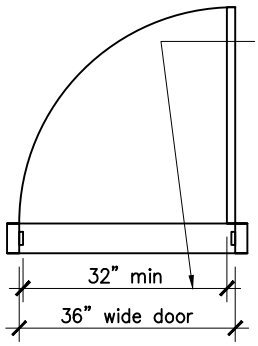

32" min Clear Opening Width
As Per
1. ANSI–Sec 4.13.5, Fig 24
2. ICC–Sec 404.2.2
3. UFAS–Sec 4.13.5, Fig 24
4. ADA–Sec 404.2.3

DMC Requirements
1. Both inside & outside
2. As per ICC–Sec 404.2.3, required DMC shall not include knee & toe clearance

Clear Opening Width at Toilet Room Door

Wall-hung Lavatory

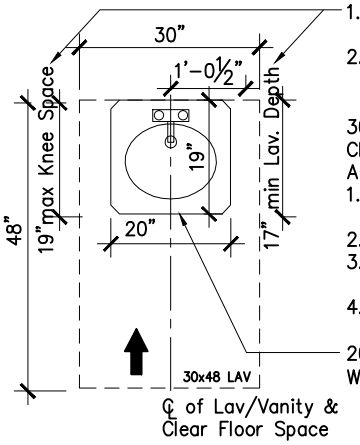

1. ANSI–Sec 4.22,3, & 4.19.3, Fig 31 & 32
2. UFAS–Sec 4.22,3, & 4.19.3, Fig 31 & 32

30"x48" Forward Approach, Clear Floor Space for Lavatory
As per
1. ANSI–Sec 4.22,3, & 4.19.3, Fig 32
2. ICC–Sec.606.2
3. UFAS–Sec 4.22,3, & 4.19.3, Fig 32
4. ADA–Sec 606.2

20" Wide x 19" Deep Wall-Hung Lav.

30"x48" CFS Forward Approach

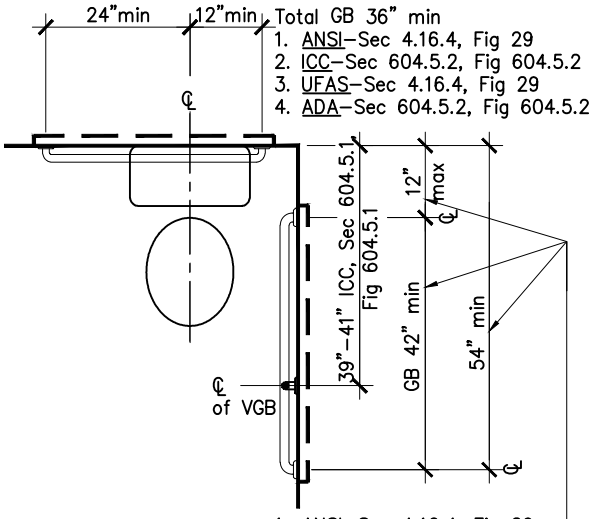

Total GB 36" min
1. ANSI–Sec 4.16.4, Fig 29
2. ICC–Sec 604.5.2, Fig 604.5.2
3. UFAS–Sec 4.16.4, Fig 29
4. ADA–Sec 604.5.2, Fig 604.5.2

1. ANSI–Sec 4.16.4, Fig 29
2. ICC–Sec 604.5.1, Fig 604.5.1
3. UFAS–Sec 4.16.4, Fig 29
4. ADA–Sec 604.5.1, Fig 604.5.1

Horizontal & Vertical Grab Bar Placement

Reference Sheet for Maneuvering Clearances for Wall-hung Lavatory & Countertop with Drop-in Lavatory; Grab Bar Locations; & Minimum Clear Opening at Bathroom Door in Common/Public Single-User Toilet Rooms

BR-9

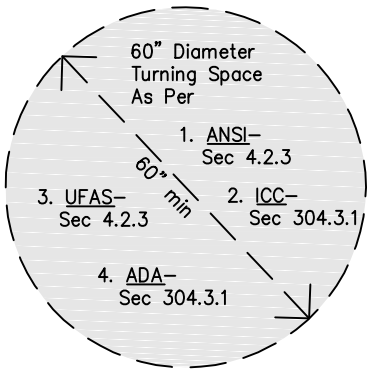

60" Dia Space for 180° Turn

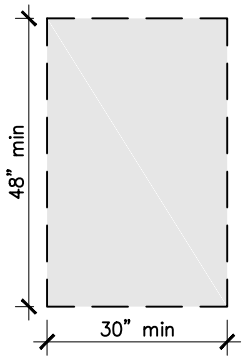

30"x48" clear floor space
As Per
1. FHA Guidelines Fig 6
2. ICC–Sec 305.3.
3. UFAS–Sec 4.2.4.1
4. ADA–Sec 305.3

30"x48" CFS

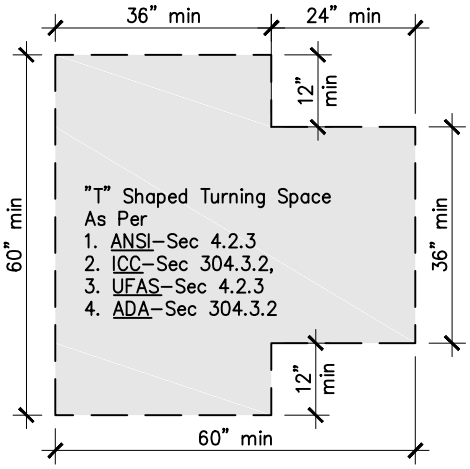

"T" Shaped Space for 180° Turn

Reference Sheet for
180 degree Turning Spaces, & CFS for Wheelchair
in Common/Public Single User Toilet Rooms

BR–10

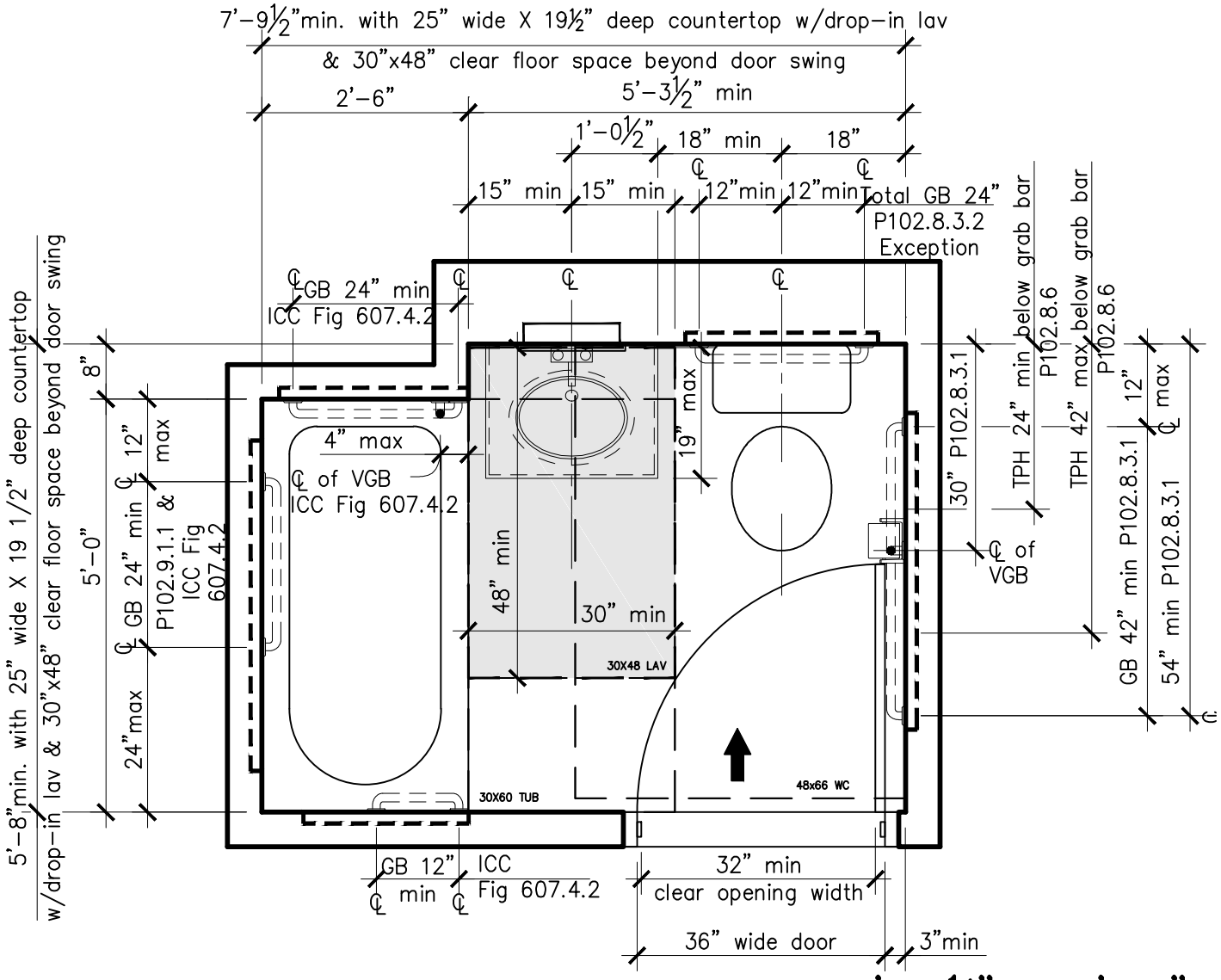

7'-9½" x 5'-8"

- door maneuvering clearance is required only outside of the bathroom
- When TPH is surface mounted, it shall be installed so as not to limit full 90 degree door swing.

Min. Bathroom Size as per BC-Appendix-"P"
with 30"x48" CFS Beyond In-Swing Door (Front Door, Opposite to WC);
Maneuvering Clearances at all Fixtures
& Grab Bar Locations;

B-1a

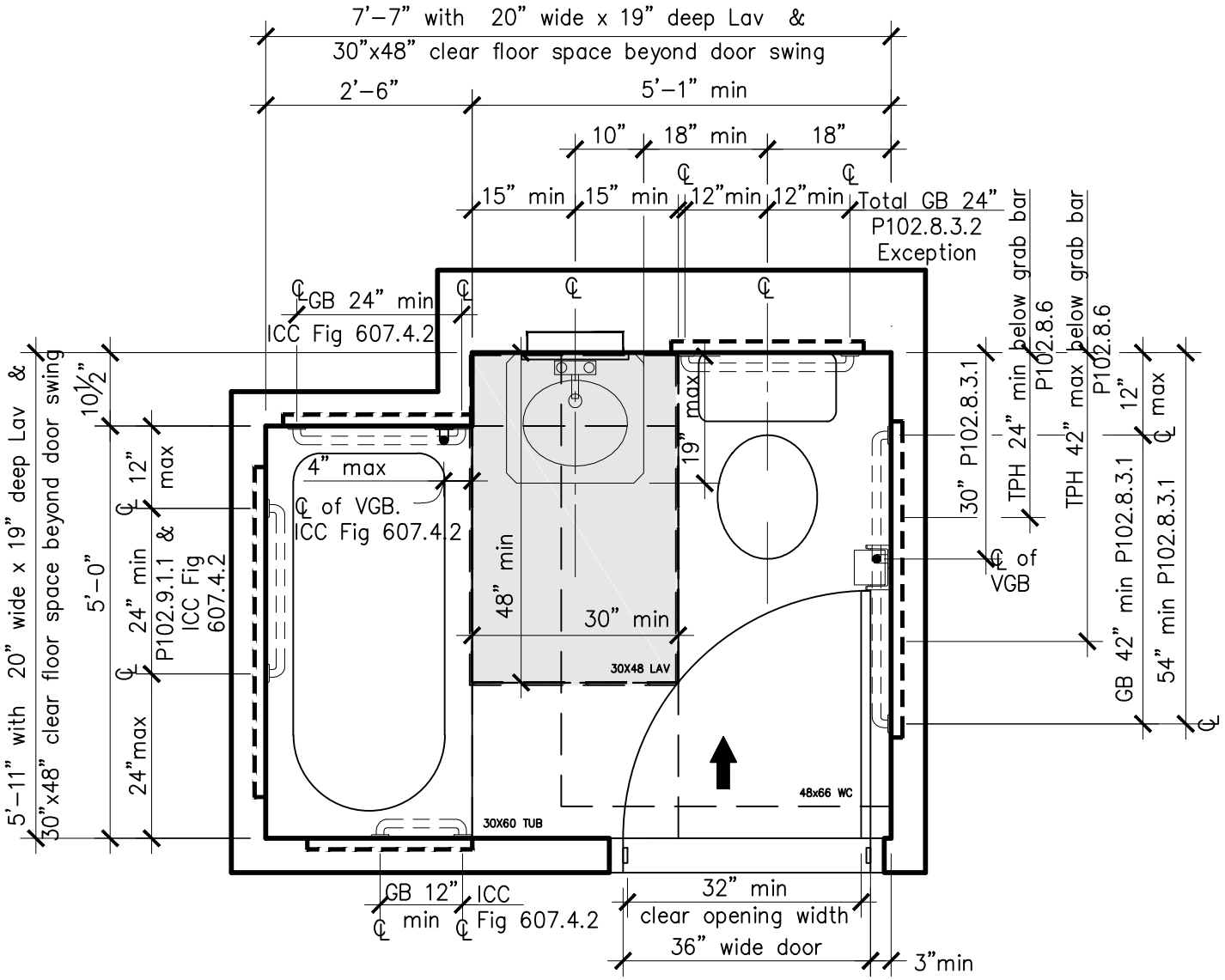

7'-7" x 5'-11"

- door maneuvering clearance is required only outside of the bathroom
- When TPH is surface mounted, it shall be installed so as not to limit full 90 degree door swing.
- Door may swing into CFS of fixtures where 30"x48" CFS is provided beyond the arc of the door as per BC-Sec P102.3, Exception.

Min. Bathroom Size as per BC-Appendix-"P"
with 30"x48" CFS Beyond In-Swing Door (Front Door, Opposite to WC);
Maneuvering Clearances at all Fixtures
& Grab Bar Locations;

B-1b

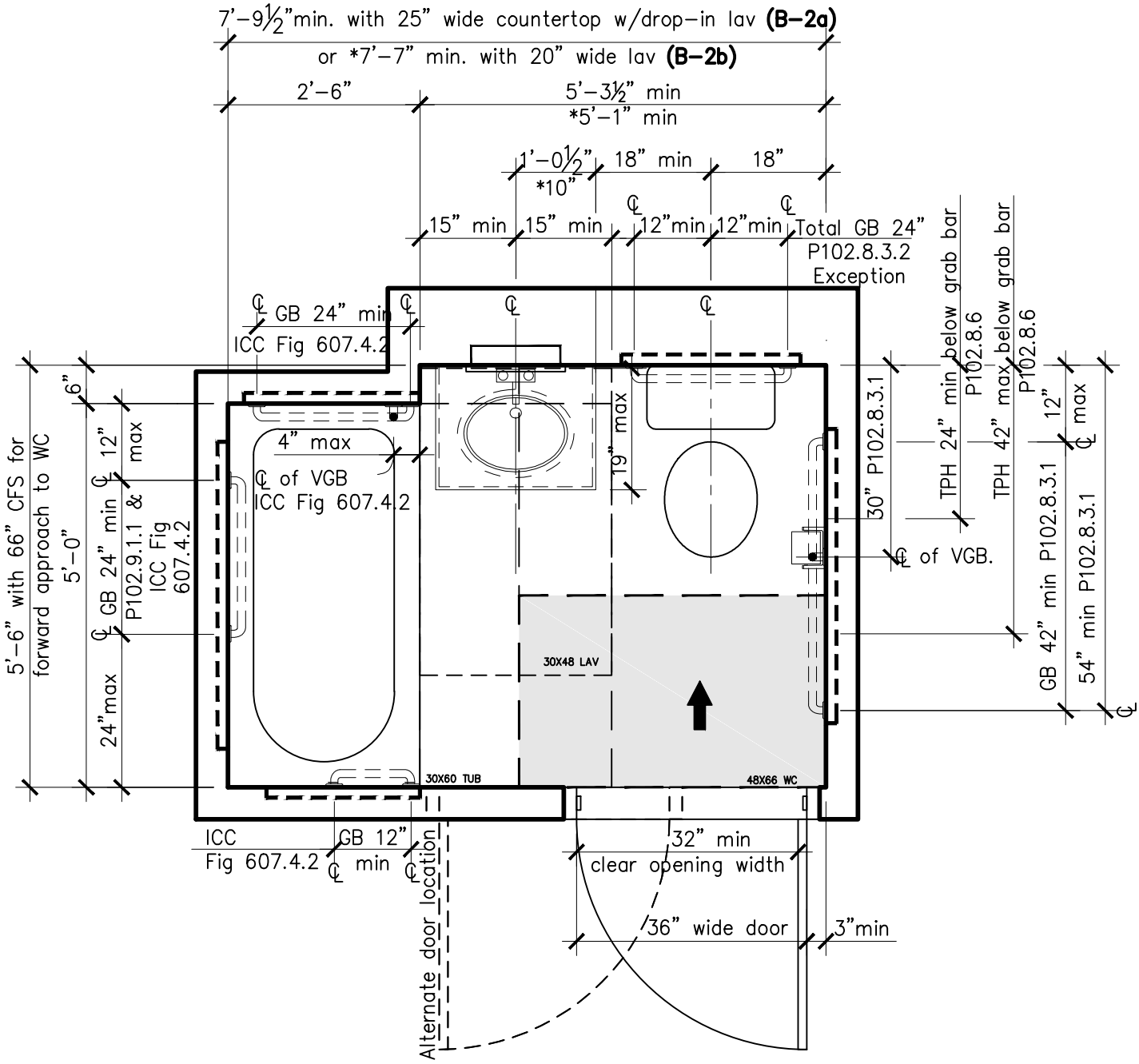

B-2a=7'-9½"x5'-6"

*B-2b=7'-7"x5'-6"

- door maneuvering clearance is required only outside of the bathroom

Min. Bathroom Size as per BC-Appendix-"P"
with Maneuvering Clearances at all Fixtures
(Front Door, Out-Swing, Opposite to WC or Lav);
& Grab Bar Locations

B-2a

B-2b

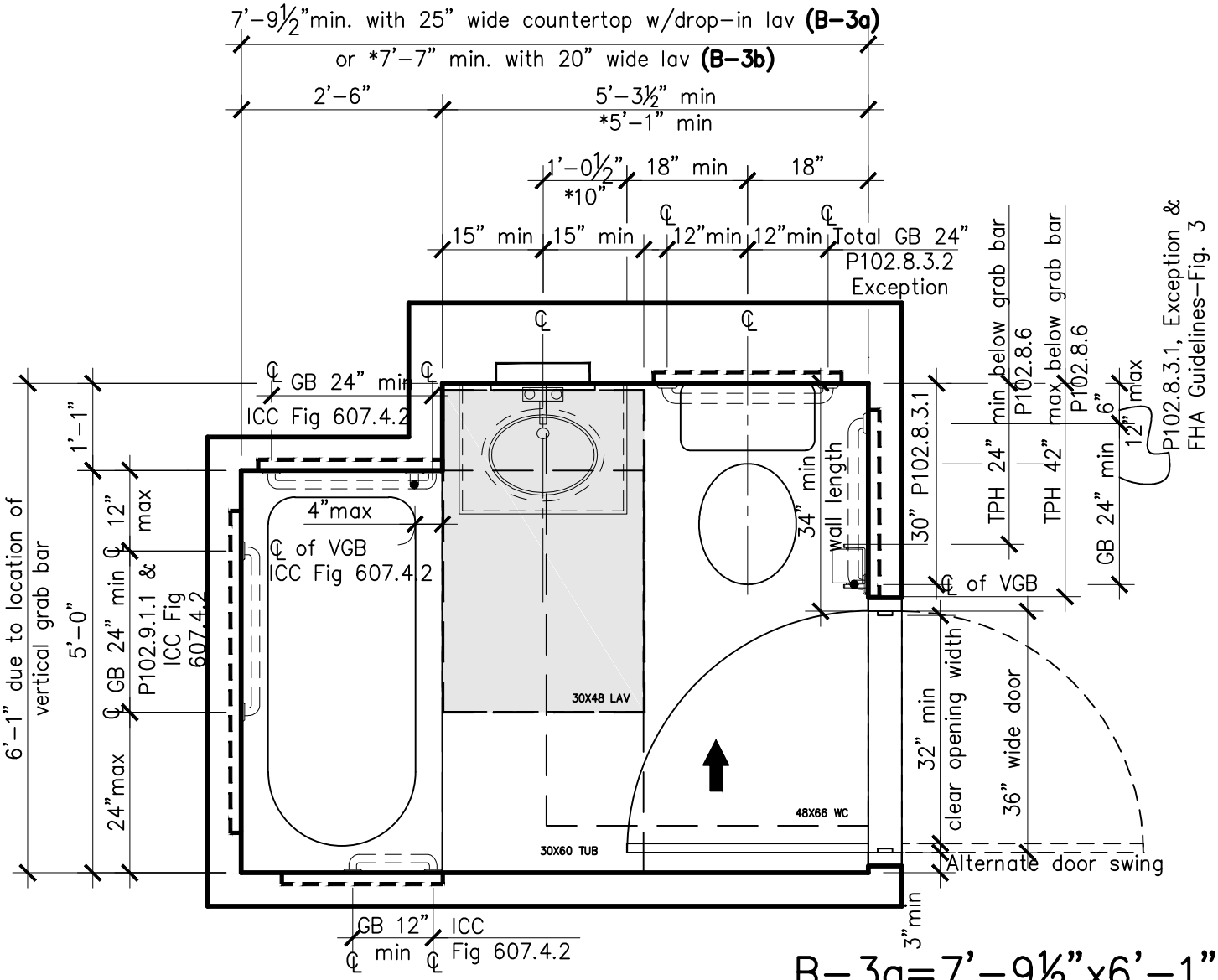

B-3a=7'-9½"x6'-1"

*B-3b=7'-7"x6'-1"

- door maneuvering clearance is required only outside of the bathroom
- Door may swing into CFS of fixtures where 30"x48" CFS is provided beyond the arc of the door as per BC-Sec P102.3, Exception

Min. Bathroom Size as per BC-Appendix-"P"
with 30"x48" CSF Beyond In-Swing or Out-Swing Door
(Side Door, Adjacent to WC); Maneuvering Clearances at all Fixtures
& Grab Bar Locations

B-3a

B-3b

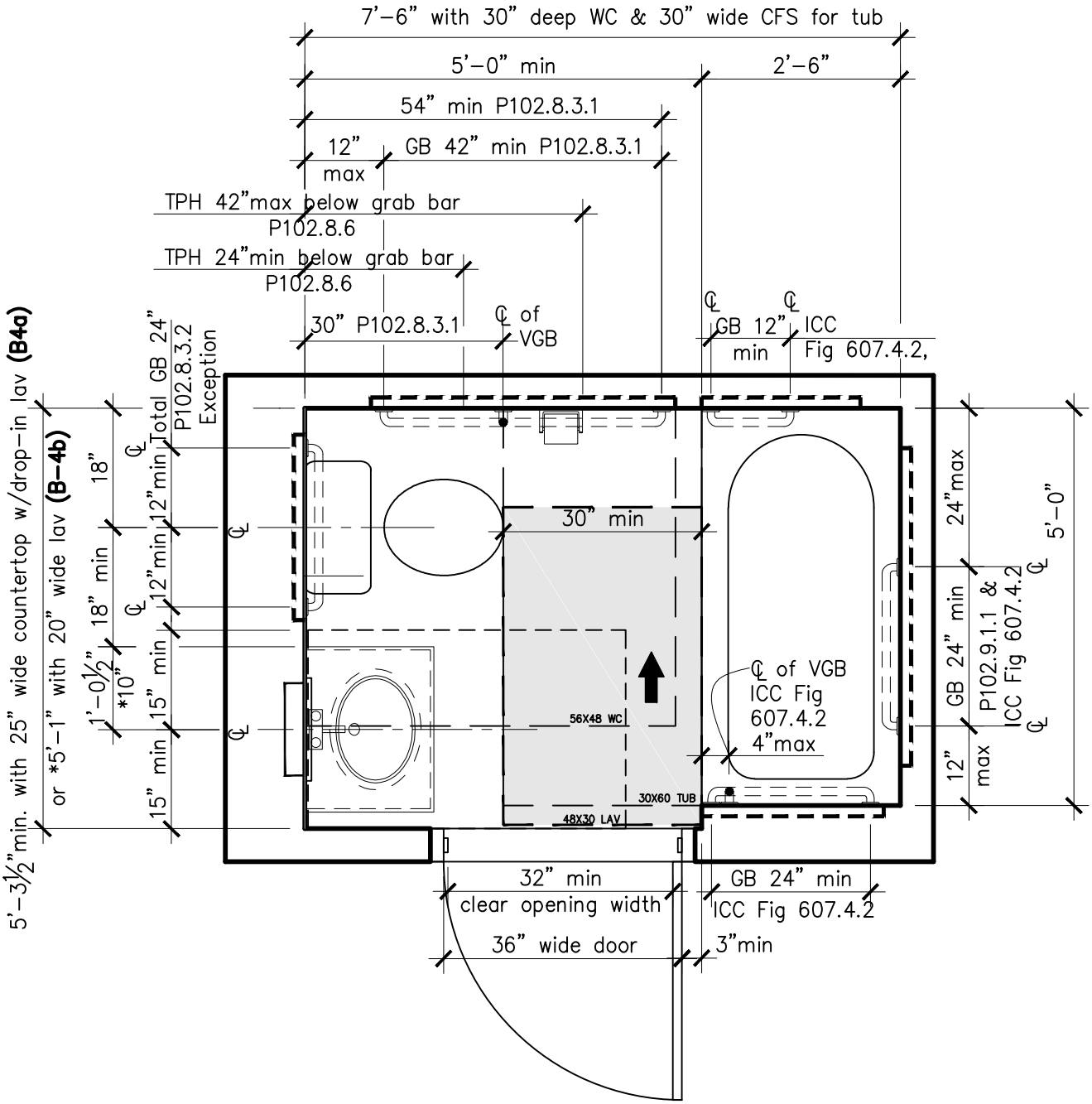

B-4a=7'-6"x5'-3½"

*B-4b=7'-6"x5'-1"

- door maneuvering clearance is required only outside of the bathroom

Min. Bathroom Size as per BC-Appendix-"P" with Maneuvering Clearances at all Fixtures & Grab Bar Locations (Front Center, Out-Swing, Adjacent to Lav);

B-4a

B-4b

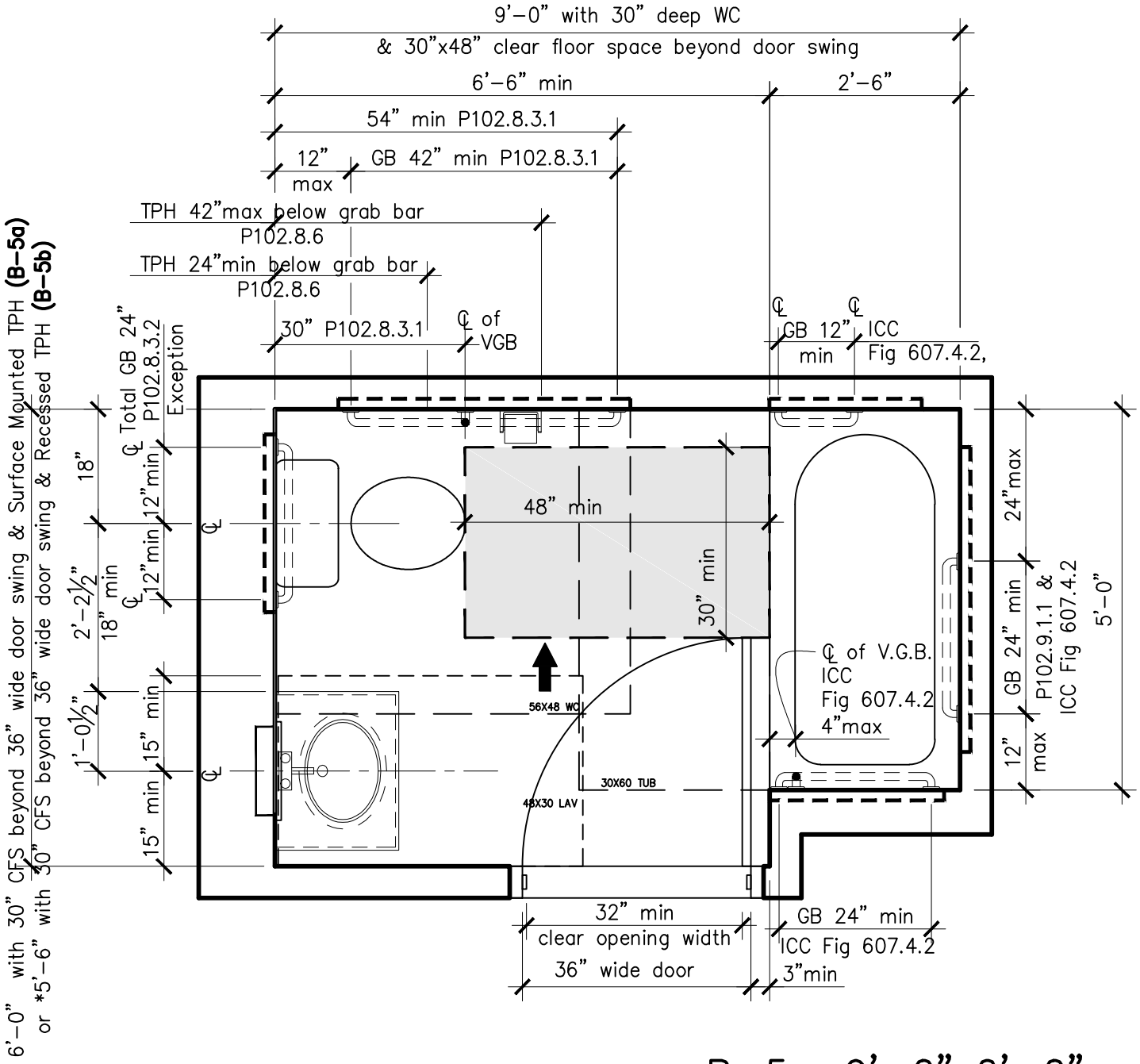

B–5a=9'–0"x6'–0"

*B–5b=9'–0"x5'–6"

- door maneuvering clearance is required only outside of the bathroom
- Door may swing into CFS of fixtures where 30"x48" CFS is provided beyond the arc of the door as per BC–Sec P102.3, Exception

Min. Bathroom Size as per BC–Appendix–"P"
with 30"x48" CSF Beyond In–Swing Door (Side Door, Adjacent to WC);
Maneuvering Clearances at all Fixtures
& Grab Bar Locations

B–5a
B–5b

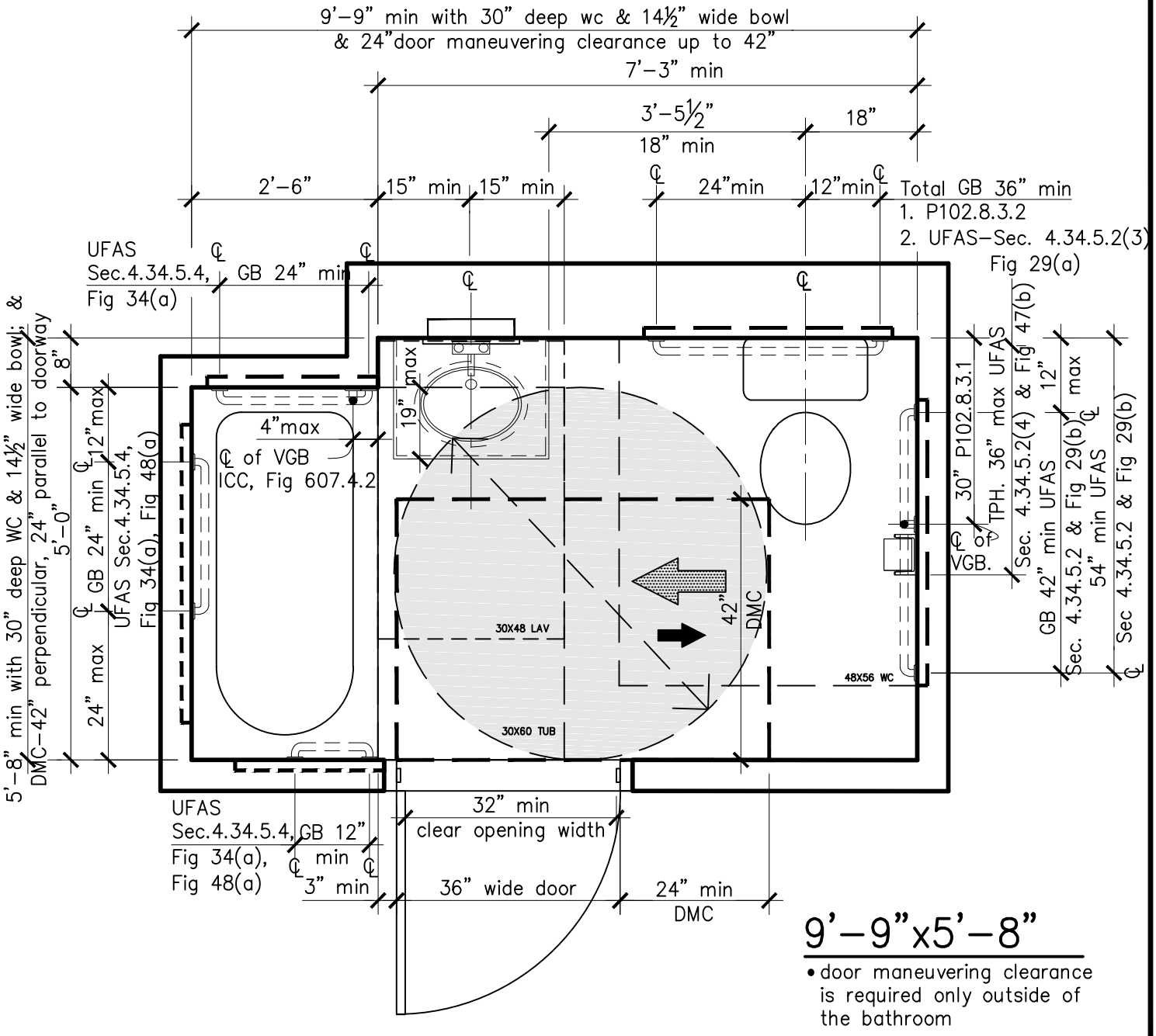

9'–9"x5'–8"

- door maneuvering clearance is required only outside of the bathroom

Min. Bathroom Size as per UFAS & BC–Appendix "P"
with 60" Dia Turning Space; Maneuvering Clearances at all Fixtures
& Door (Front Door, Opposite to Lav); & Grab Bar Locations

B–11a

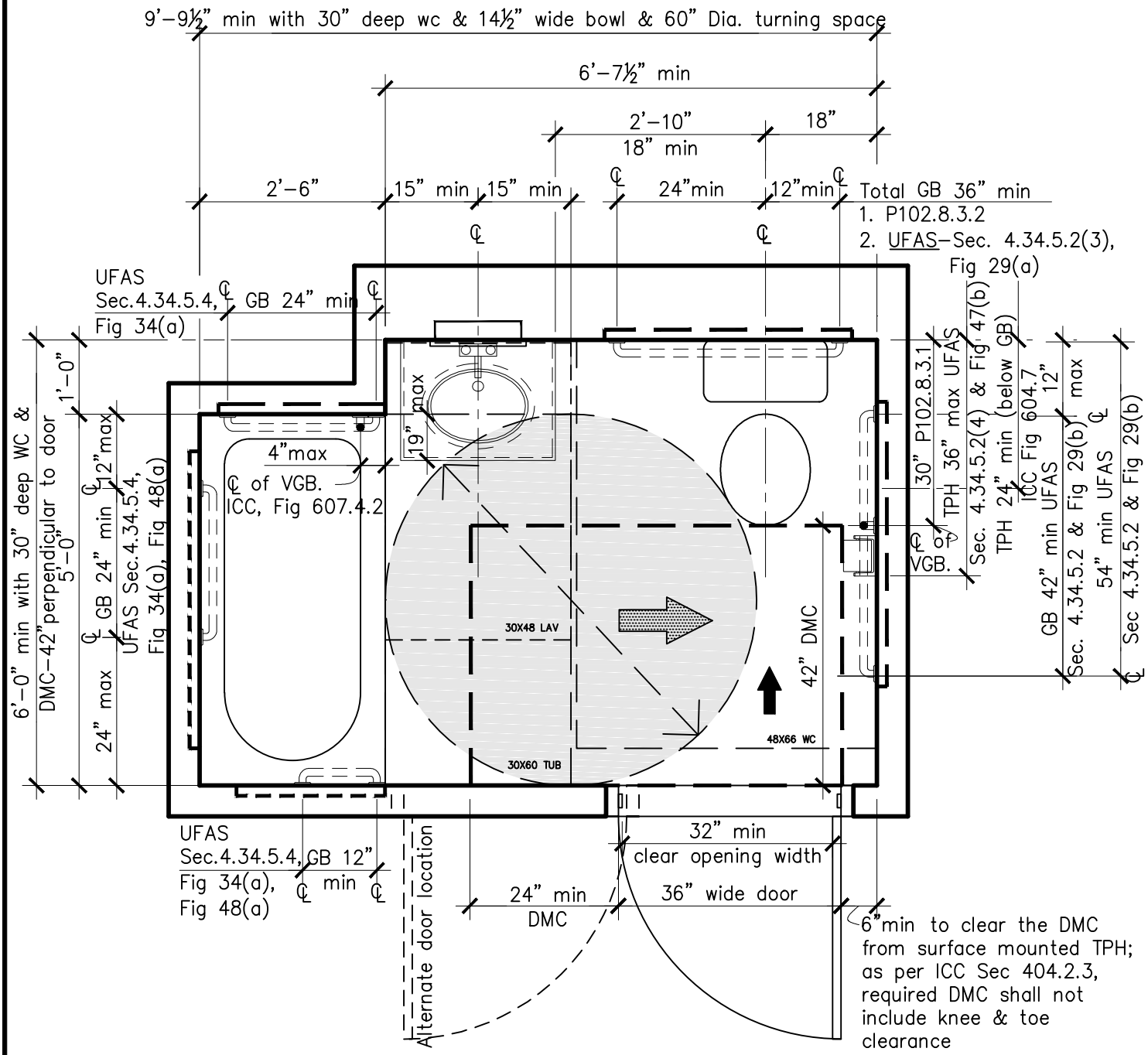

9'–9½"x6'–0"

- door maneuvering clearance is required only outside of the bathroom

Min. Bathroom Size as per UFAS & BC–Appendix "P" with 60" Dia Turning Space; Maneuvering Clearances at all Fixtures & Door (Front Door, Opposite to W.C. or Lav); & Grab Bar Locations

B–11b

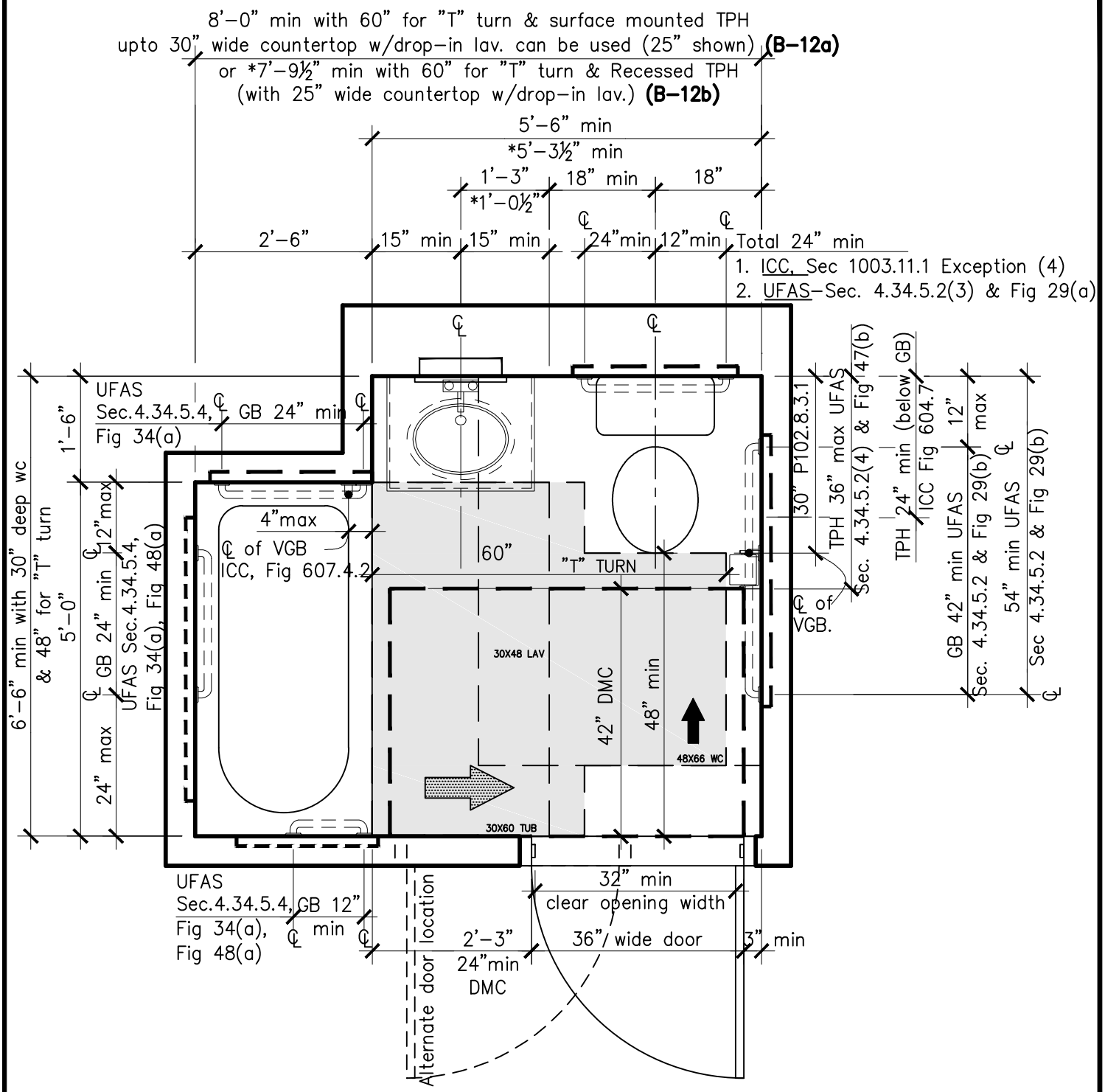

B-12a=8'-0"x6'-6"

*B-12b=7'-9½"x6'-6"

• door maneuvering clearance is required only outside of

Min. Bathroom Size as per UFAS & BC-Appendix "P" with "T" Shaped Turning Space; Maneuvering Clearances at all Fixtures & Door (Front Door, Opposite to WC or Lav); & Grab Bar Locations

B-12a

B-12b

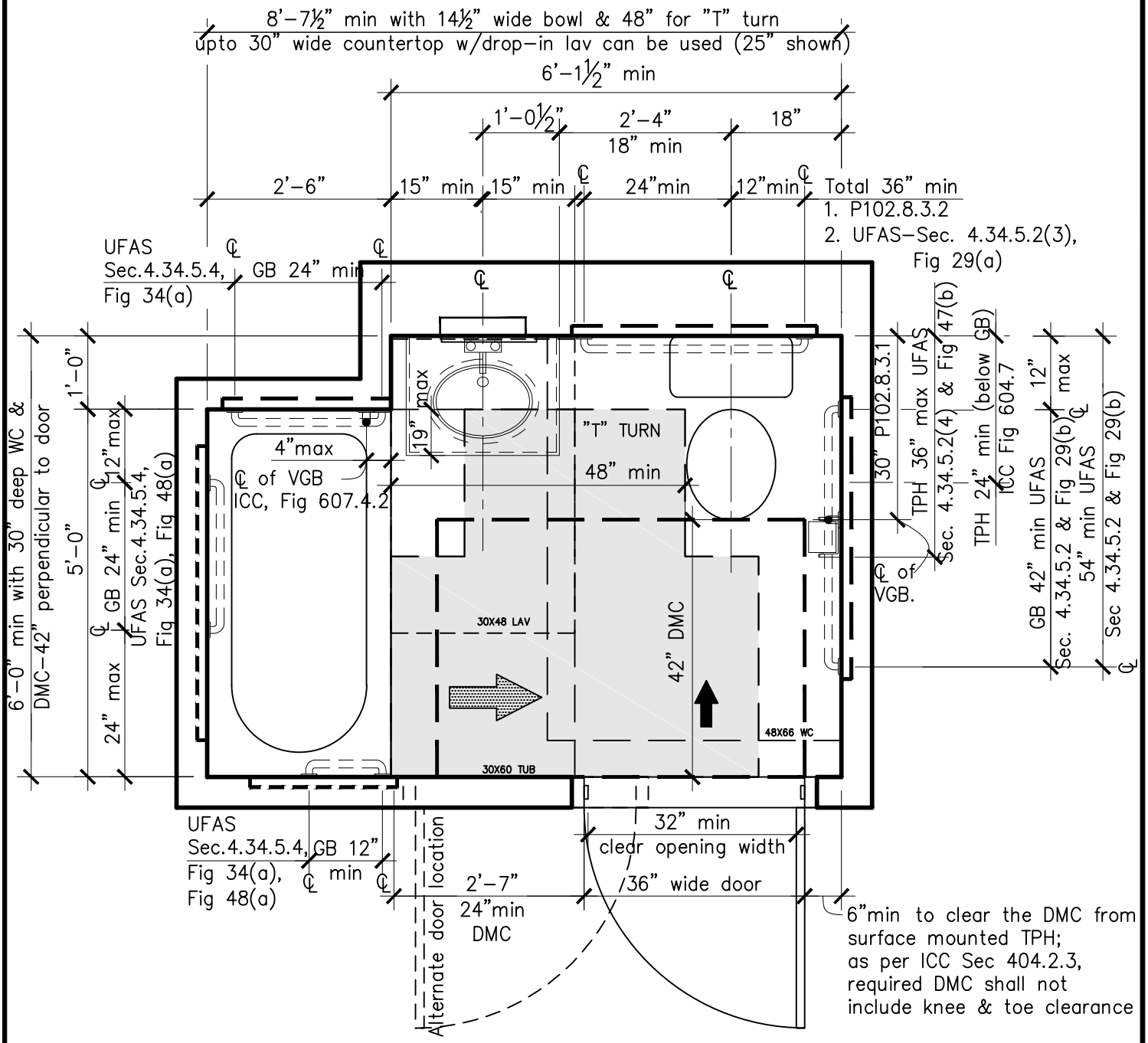

8'-7½"x6'-0"

- door maneuvering clearance is required only outside of the bathroom

Min. Bathroom Size as per UFAS & BC-Appendix "P" with "T" Shaped Turning Space; Maneuvering Clearances at all Fixtures & Door (Front Door, Opposite to WC or Lav); & Grab Bar Locations

B-13a

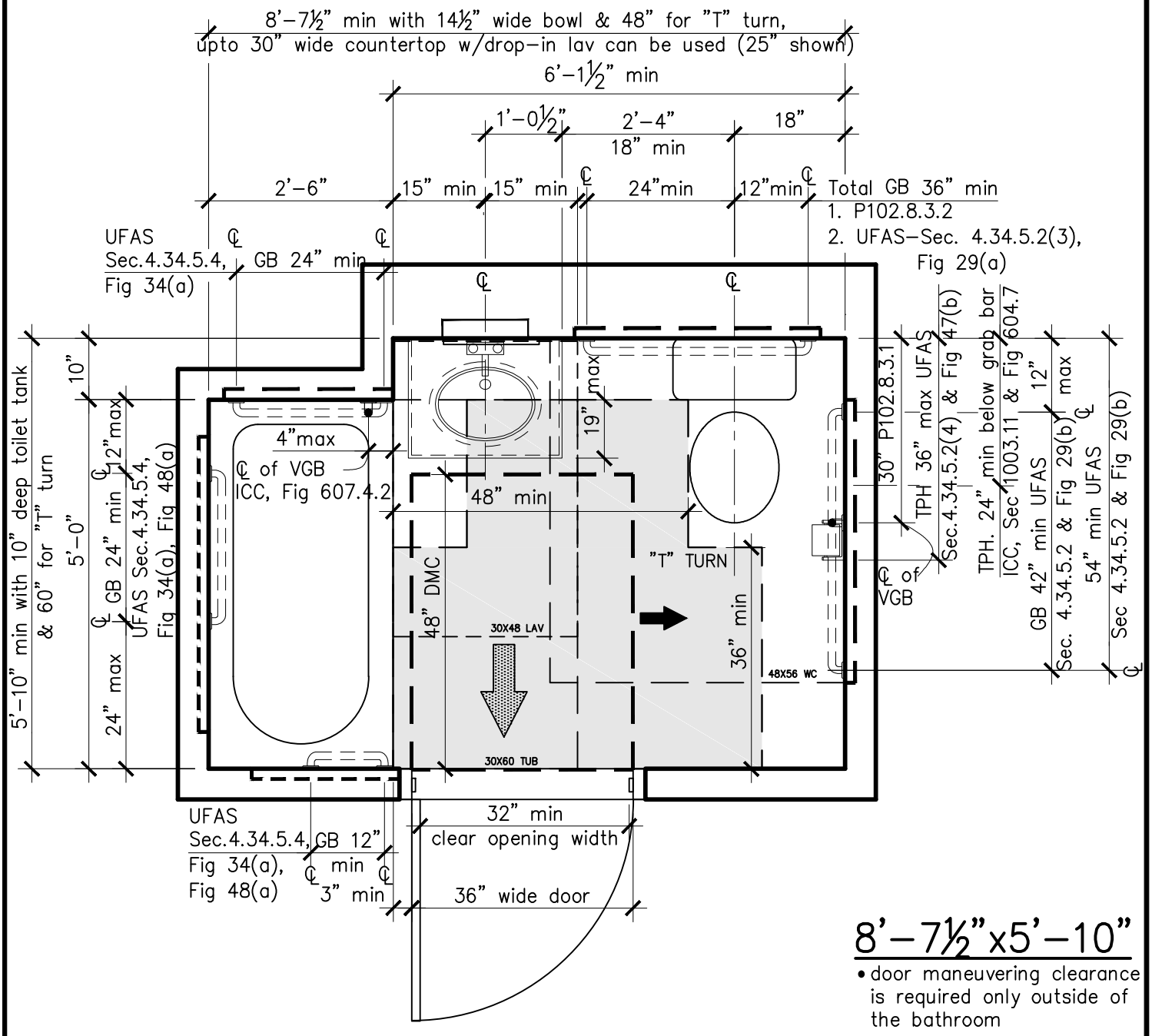

8'-7½"x5'-10"

- door maneuvering clearance is required only outside of the bathroom

Min. Bathroom Size as per UFAS & BC-Appendix "P" with "T" Shaped Turning Space; Maneuvering Clearances at all Fixtures & Door (Front Door, Opposite to Lav); & Grab Bar Locations

B-13b

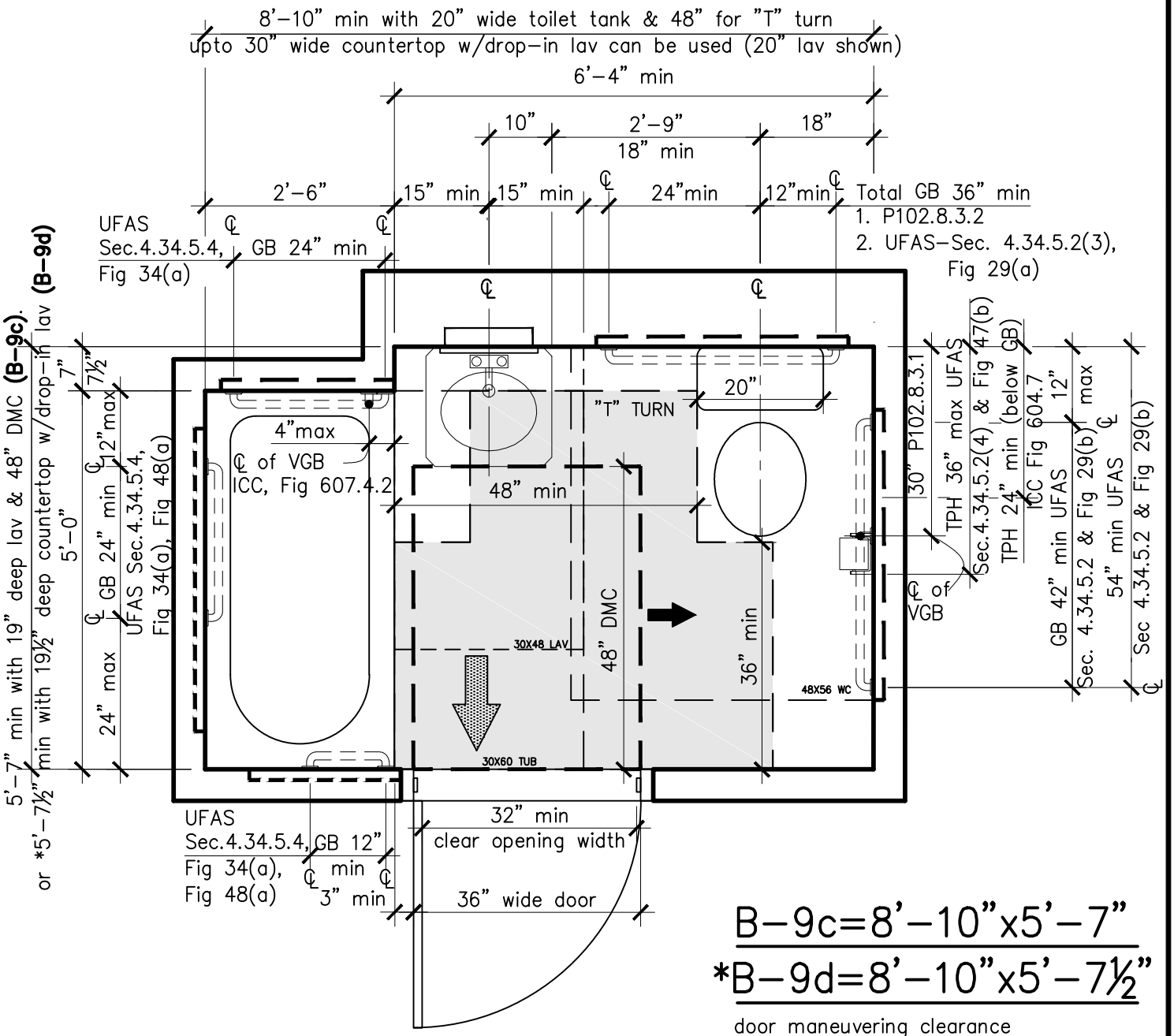

B–9c=8'–10"x5'–7"

***B–9d=8'–10"x5'–7½"**

door maneuvering clearance is required both inside & outside of the bathroom

Min. Bathroom Size as per UFAS & BC–Appendix "P" with "T" Shaped Turning Space; Maneuvering Clearances at all Fixtures & Door (Front Door, Opposite to Lav); & Grab Bar Locations

B–13c

B–13d

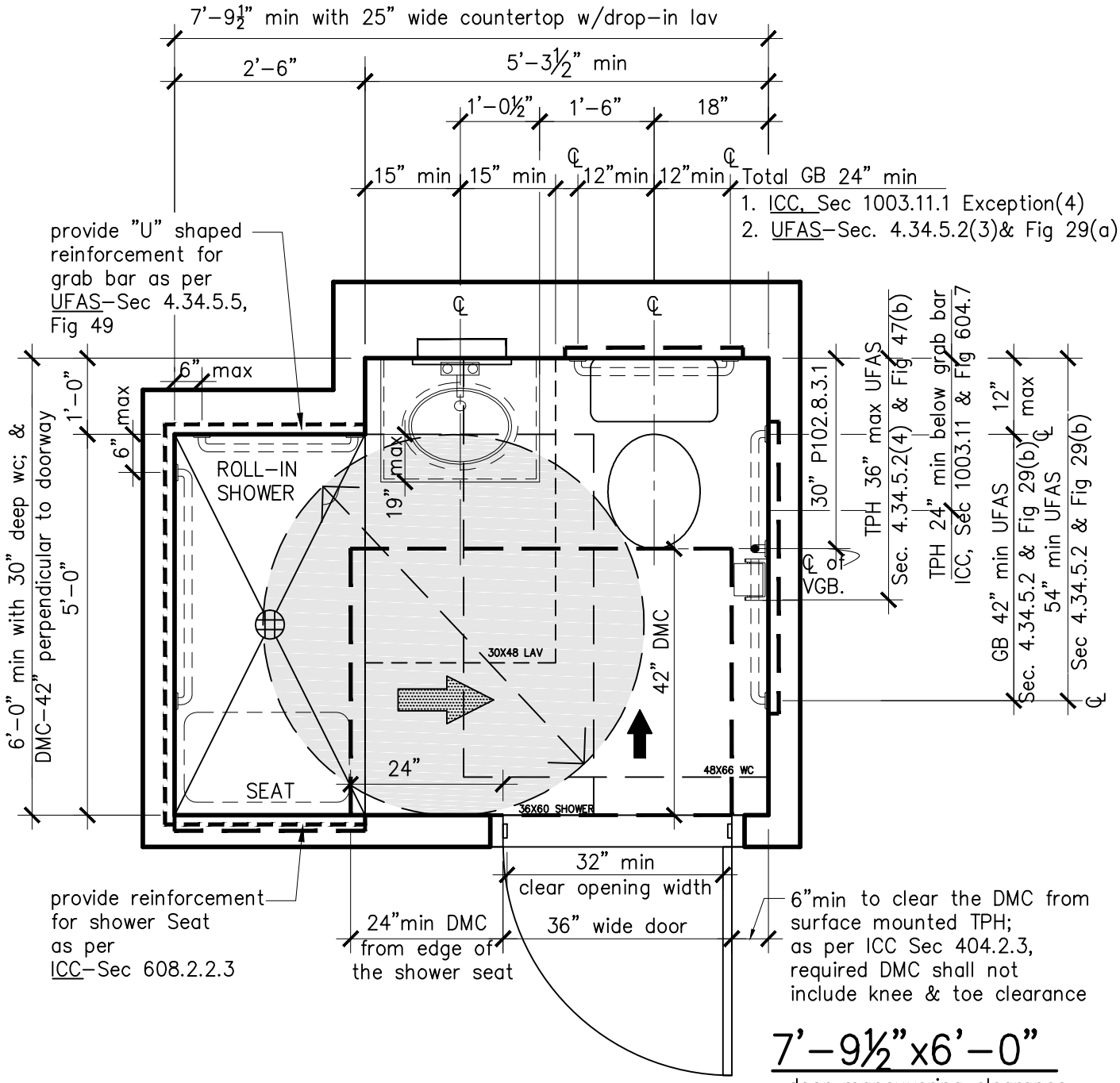

7'-9½"x6'-0"

- door maneuvering clearance is required only outside of the bathroom
- Roll-in shower shall not have more than 1:50 pitch (2% max.) as the shower area is used for 60" Dia turning space & DMC

Min. Bathroom Size with Roll-in Type Shower as per UFAS & BC-Appendix "P" with 60" Dia Turning Space; Maneuvering Clearances at all Fixtures & Door (Front Door, Opposite to WC); & Grab Bar Locations

B-14a

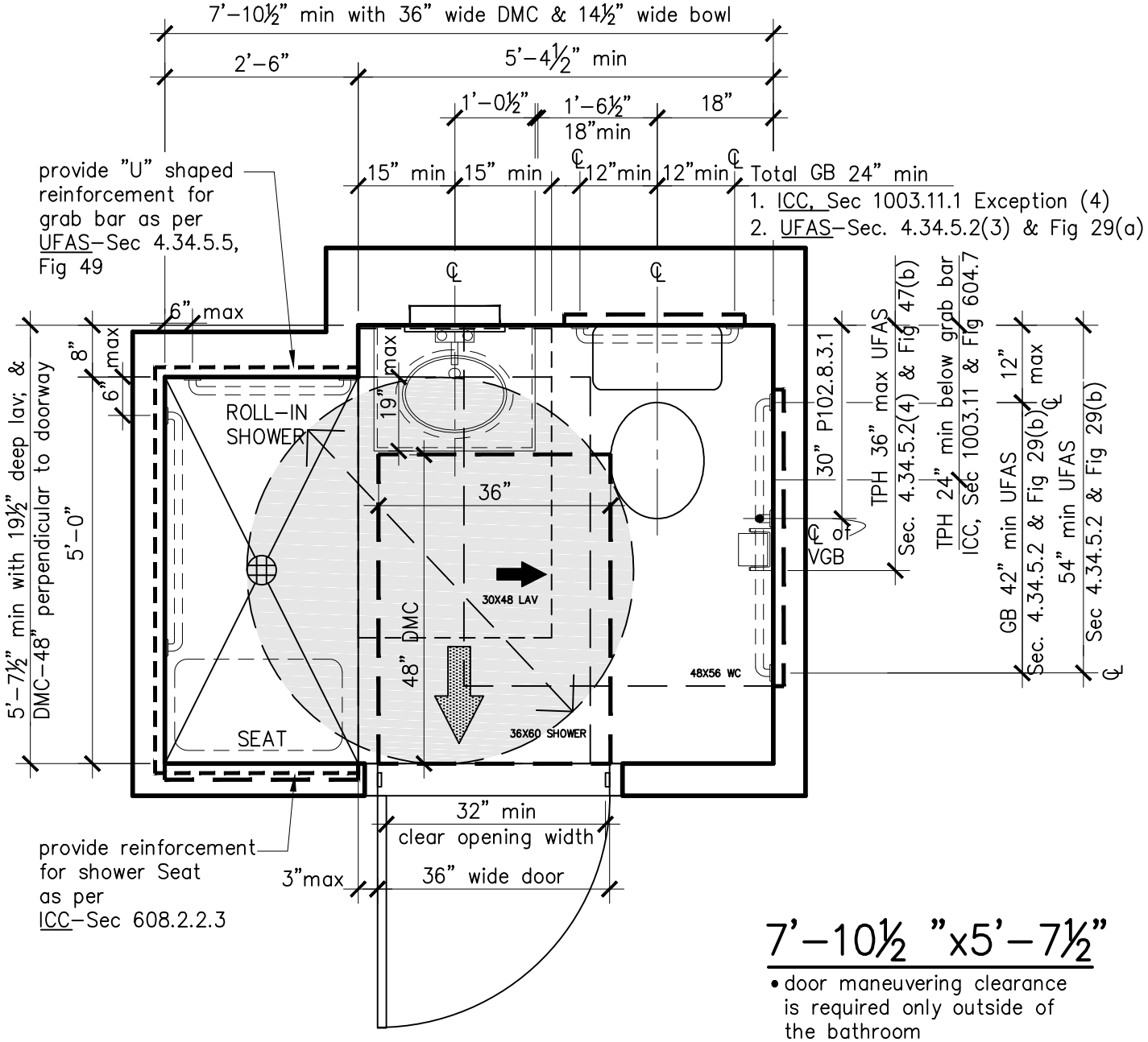

7'–10½ "x5'–7½"

- door maneuvering clearance is required only outside of the bathroom
- Roll–in shower shall not have more than 1:50 pitch (2% max.) as the shower area is used for 60" Dia turning space & DMC

Min. Bathroom Size with Roll–in Type Shower as per UFAS & BC–Appendix "P" with 60" Dia Turning Space; Maneuvering Clearances at all Fixtures & Door (Front Door, Opposite to Lav); & Grab Bar Locations

B–14b

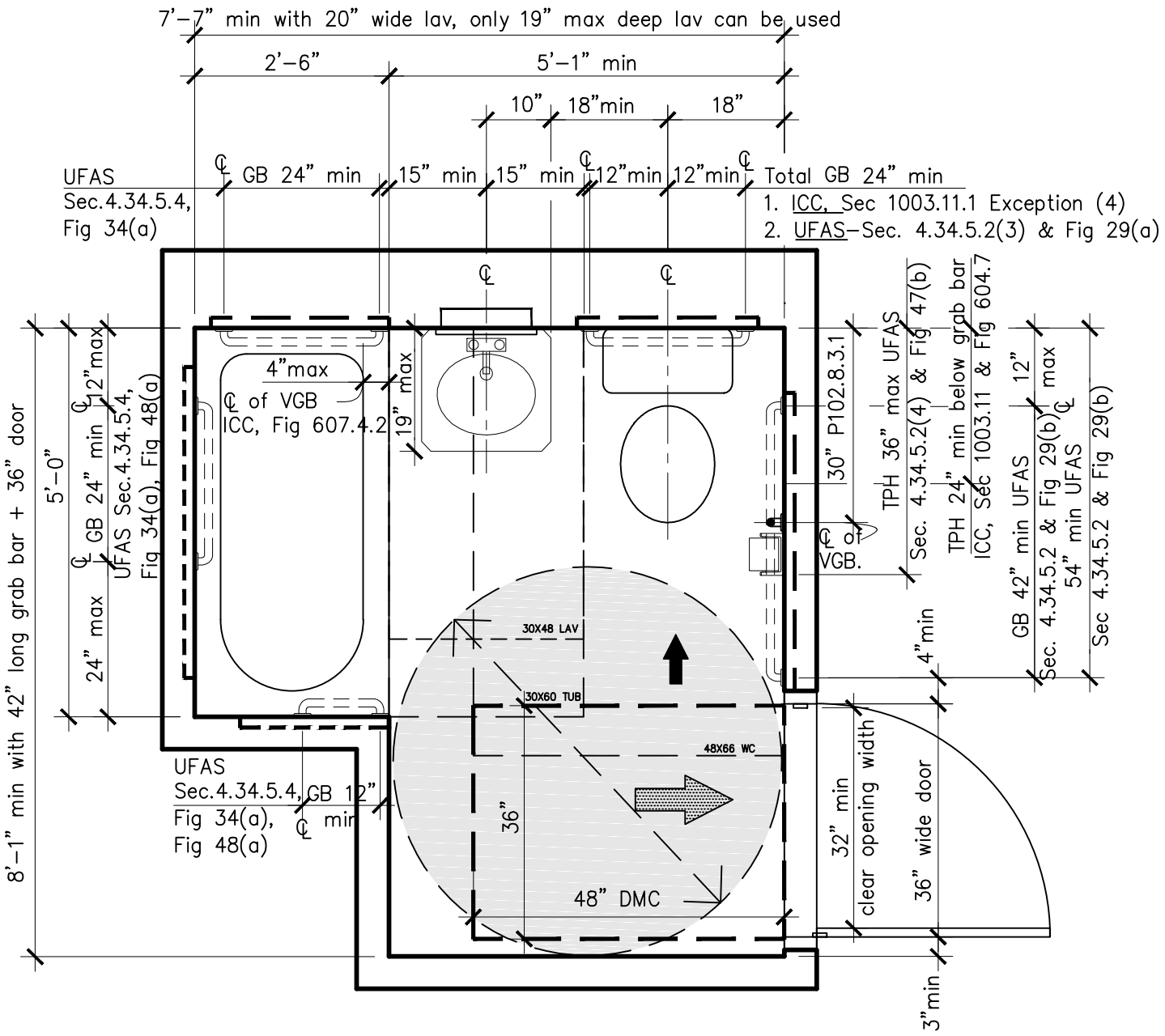

7'-7"x8'-1"

- door maneuvering clearance is required only outside of the bathroom

Min. Bathroom Size as per UFAS & BC-Appendix "P" with 60" Dia Turning Space; Maneuvering Clearances at all Fixtures & Door (Side Door-Corner, Adjacent to WC); & Grab Bar Locations

B-15

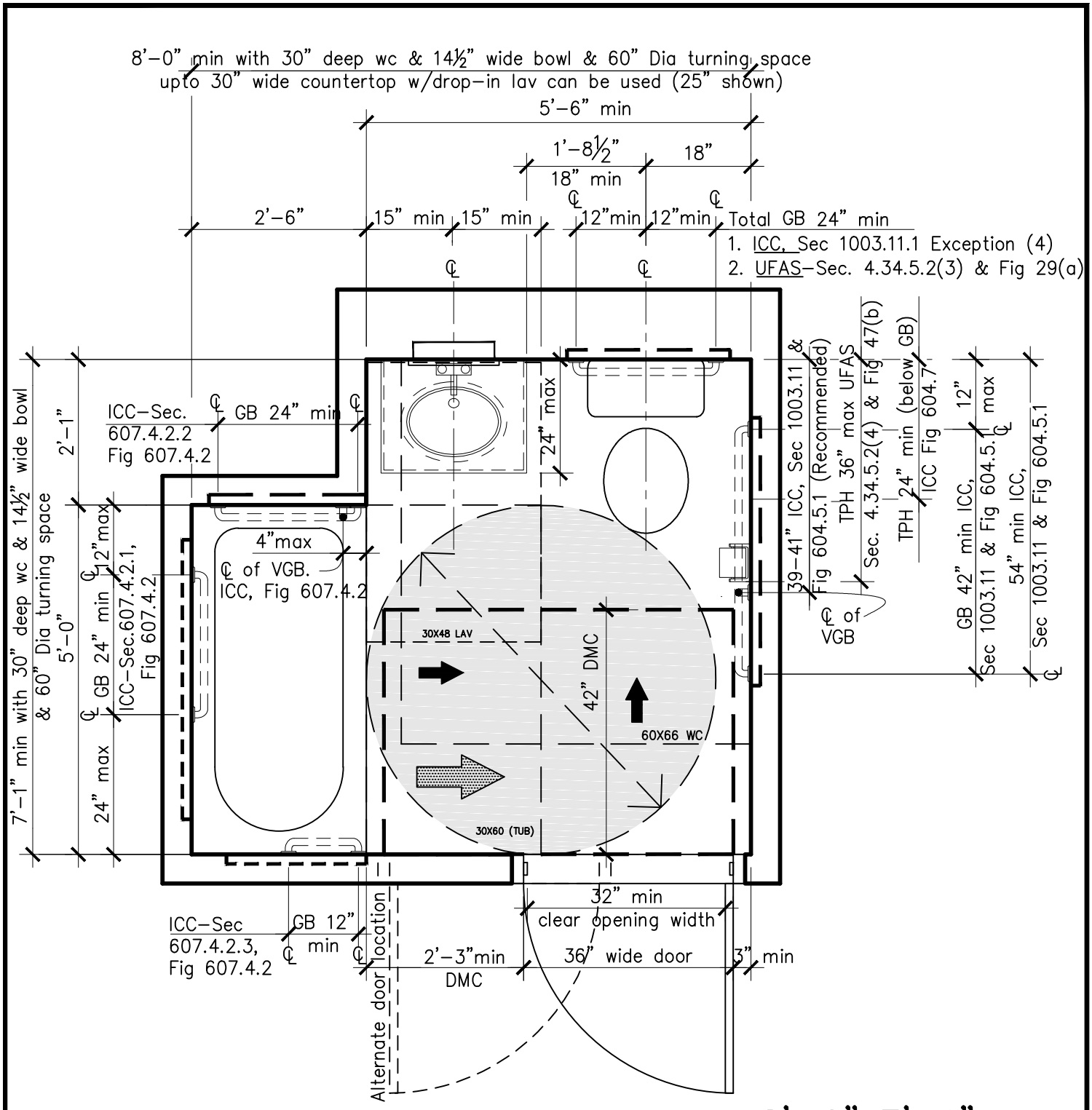

8'-0"x7'-1"

- door maneuvering clearance is required only outside of the bathroom
- Lav cannot overlap the required CFS of the tub

Min. Bathroom Size as per BC-Sec. 1107.2.2 Exception 1, i.e. Type "A" of ICC-Sec 1003.11; & UFAS with 60" Dia Turning Space; Maneuvering Clearances at all Fixtures & Door (Front Door, Opposite to WC or Lav); & Grab Bar Locations

B-21a

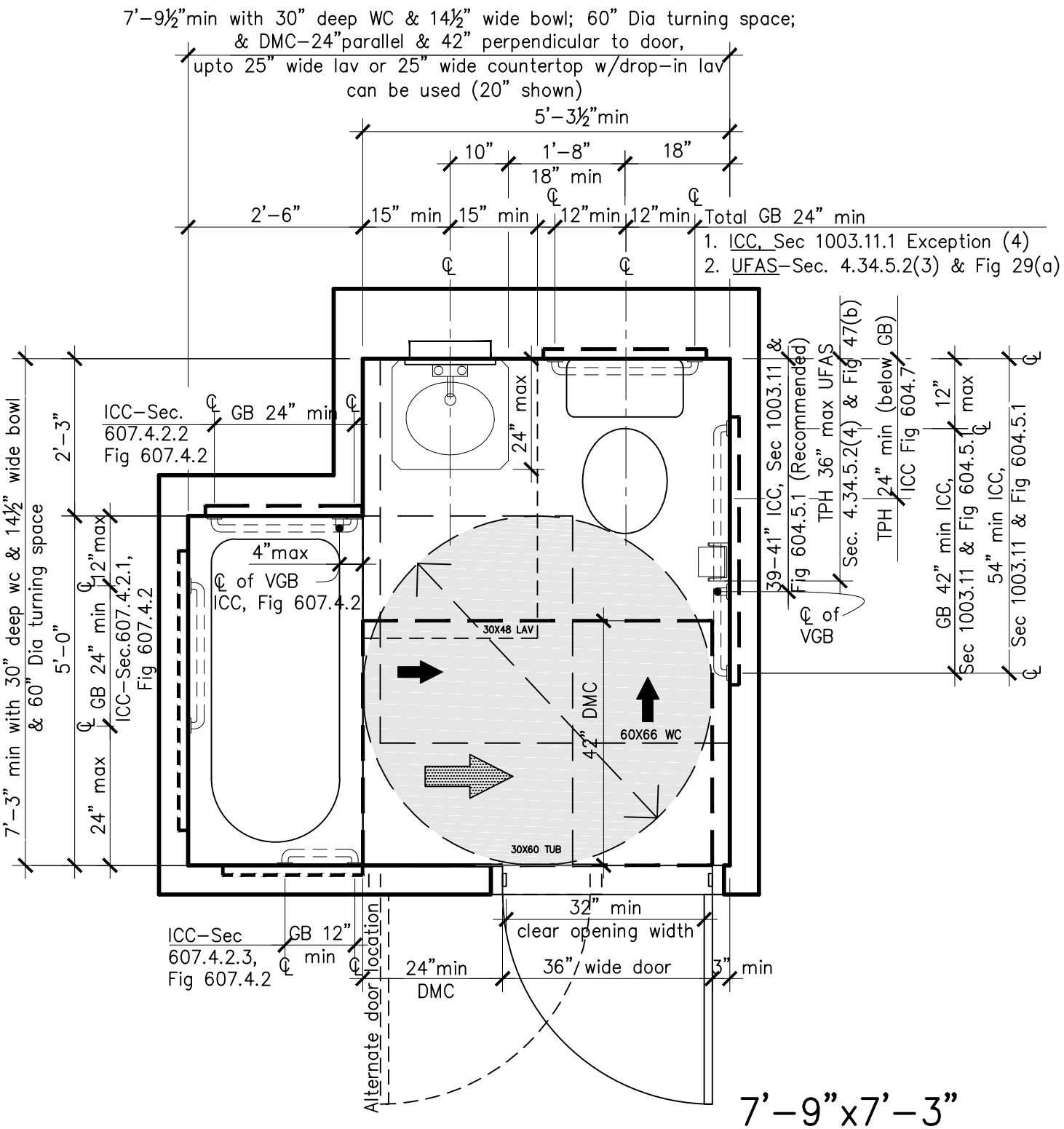

7'-9"x7'-3"

- door maneuvering clearance is required only outside of the bathroom
- Lav cannot overlap the required CFS of the tub

Min. Bathroom Size as per BC-Sec. 1107.2.2 Exception 1, i.e. Type "A" of ICC-Sec 1003.11 & UFAS with 60" Dia Turning Space; Maneuvering Clearances at all Fixtures & Door (Front Door, Opposite to WC or Lav); & Grab Bar Locations

B-21b

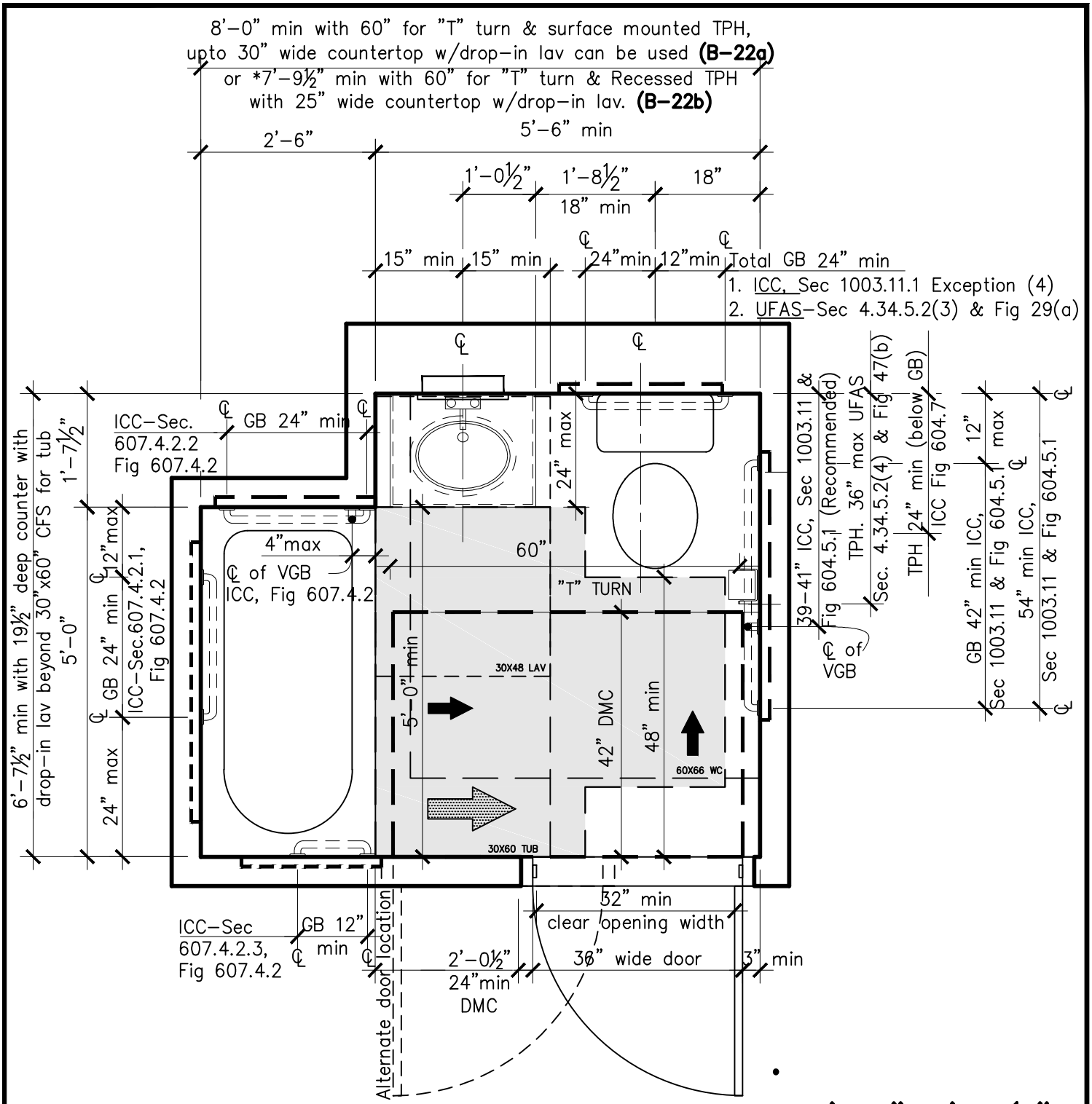

B–22a=8'–0"x6'–7½"

*B–22b=7'–9½"x6'–7½"

- door maneuvering clearance is required only outside of the bathroom
- Lav cannot overlap the required CFS of the tub

Min. Bathroom Size as per BC–Sec. 1107.2.2 Exception 1, i.e. Type "A" of ICC–Sec. 1003.11 & UFAS with "T" Turning Space; Maneuvering Clearances at all Fixtures & Door (Front Door, Opposite to WC or Lav); & Grab Bar Locations

B–22a

B–22b

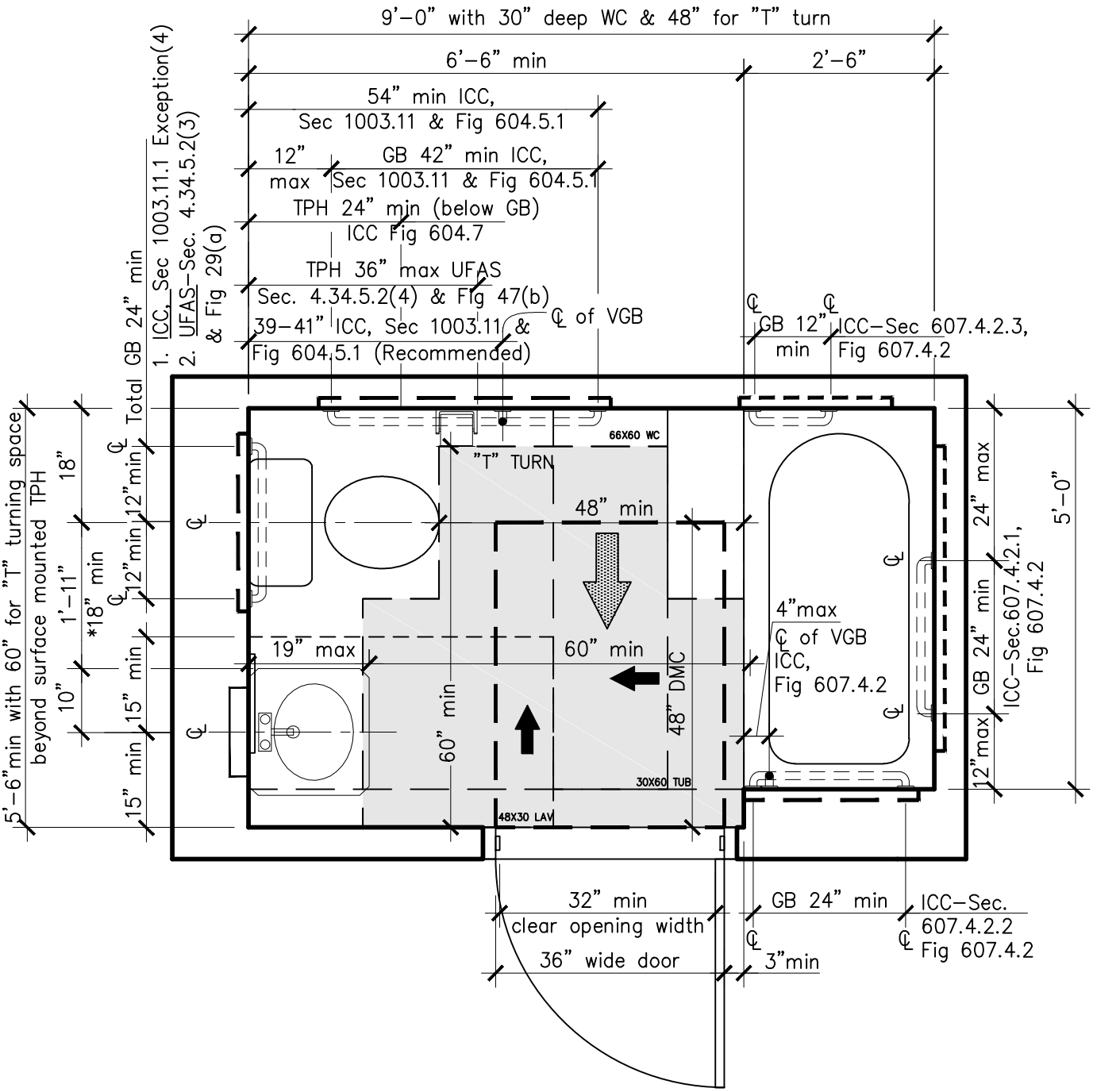

B-23a=9'-0"x5'-6"

- door maneuvering clearance is required only outside of the bathroom

Min. Bathroom Size as per BC-Sec. 1107.2.2 Exception 1, i.e. Type "A" of ICC-Sec 1003.11; & UFAS with "T" Turning Space; Maneuvering Clearances at all Fixtures & Door (Front Door, Center, Adjacent to Lav); & Grab Bar Locations

B-23a

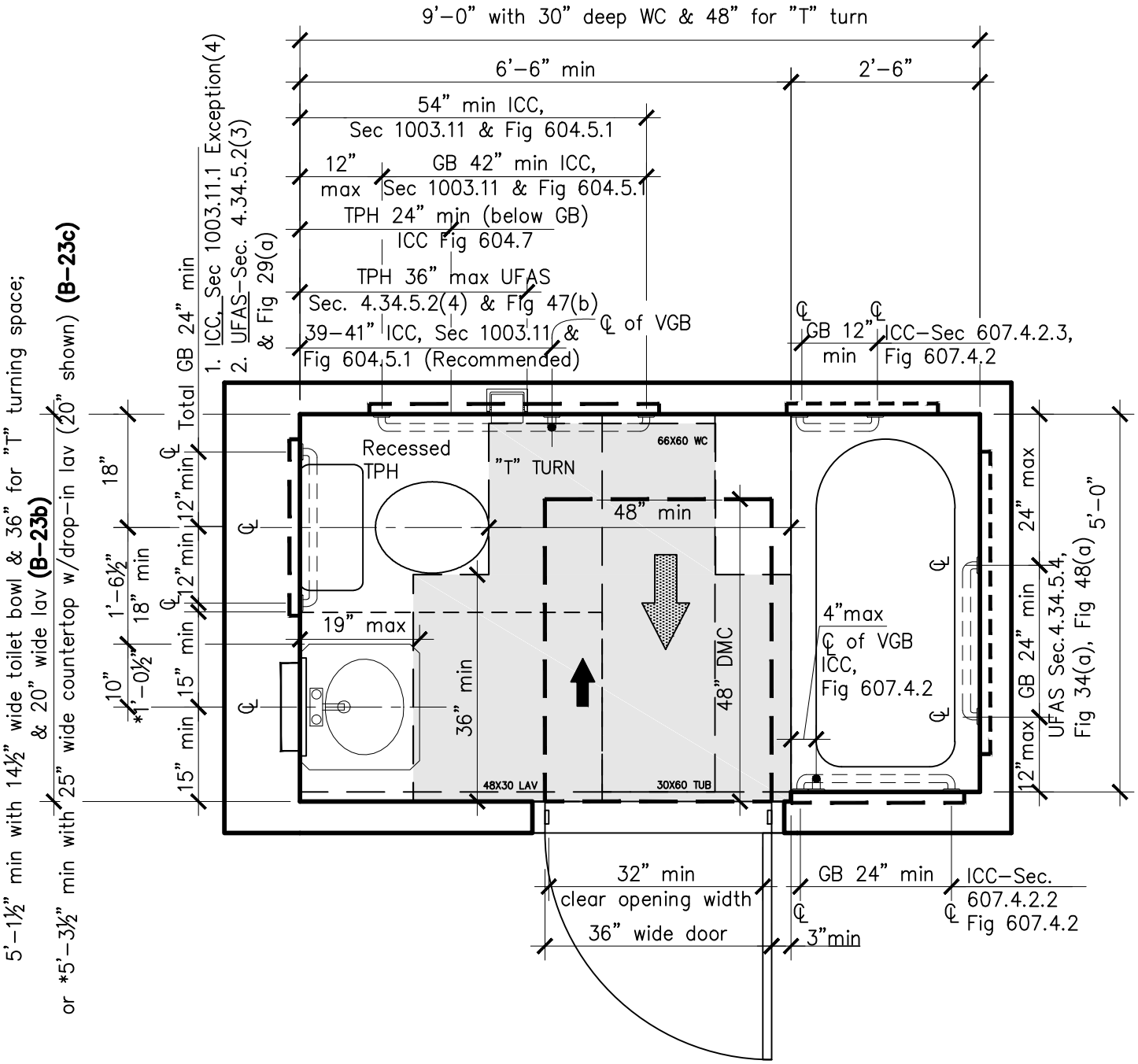

B–23b=9'–0"x5'–1½"

***B–23c=9'–0"x5'–3½"**

- door maneuvering clearance is required only outside of the bathroom

Min. Bathroom Size as per BC–Sec. 1107.2.2 Exception 1, i.e. Type "A" of ICC–Sec 1003.11; & UFAS with "T" Turning Space; Maneuvering Clearances at all Fixtures & Door (Front Door, Center, Adjacent to Lav); & Grab Bar Locations

B–23b

B–23c

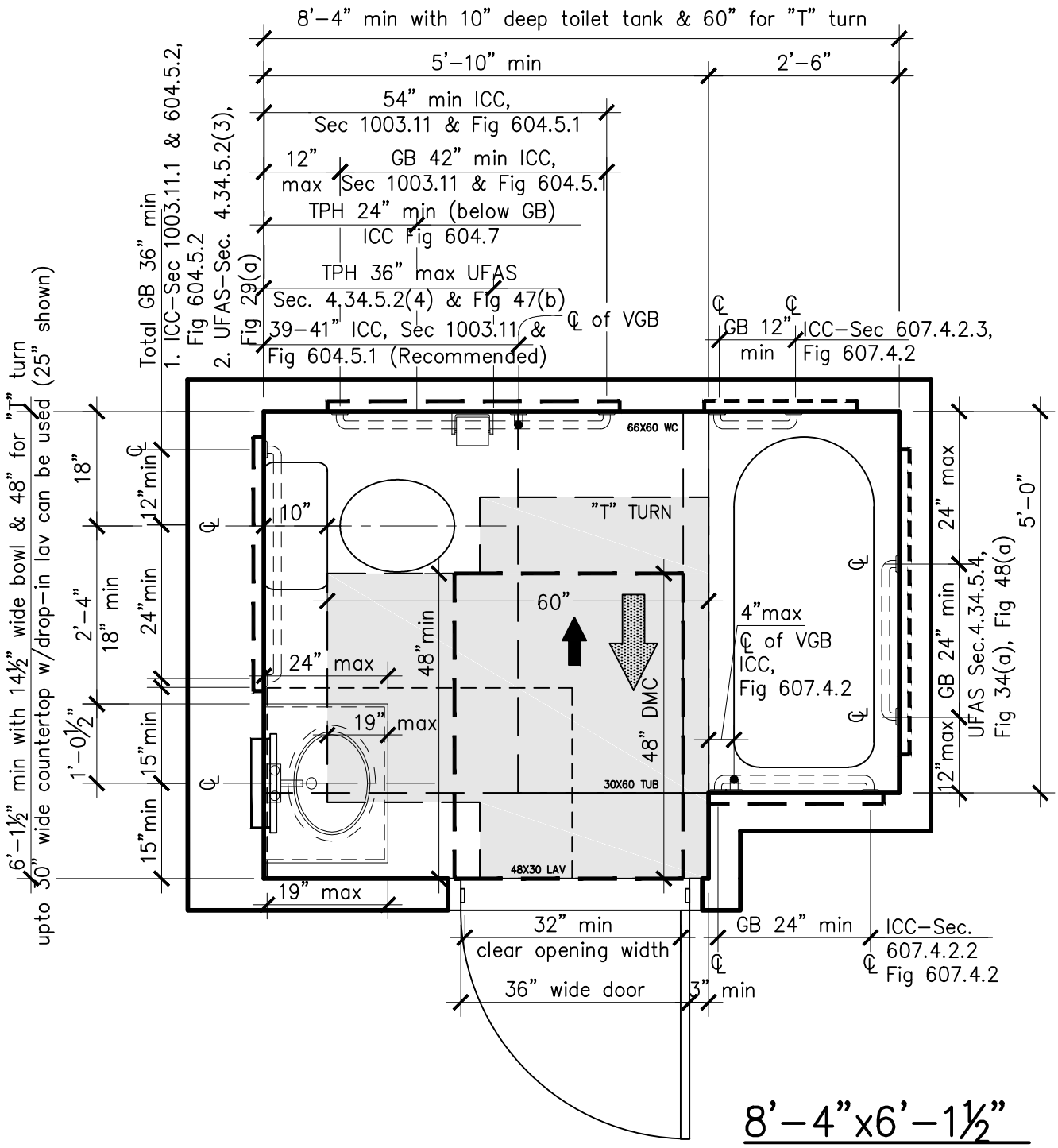

8'-4"x6'-1½"

- door maneuvering clearance is required only outside of the bathroom

Min. Bathroom Size as per BC-Sec. 1107.2.2 Exception 1, i.e. Type "A" of ICC-Sec 1003.11; & UFAS with "T" Turning Space; Maneuvering Clearances at all Fixtures & Door (Front Door, Center, Adjacent to Lav); & Grab Bar Locations

B-24

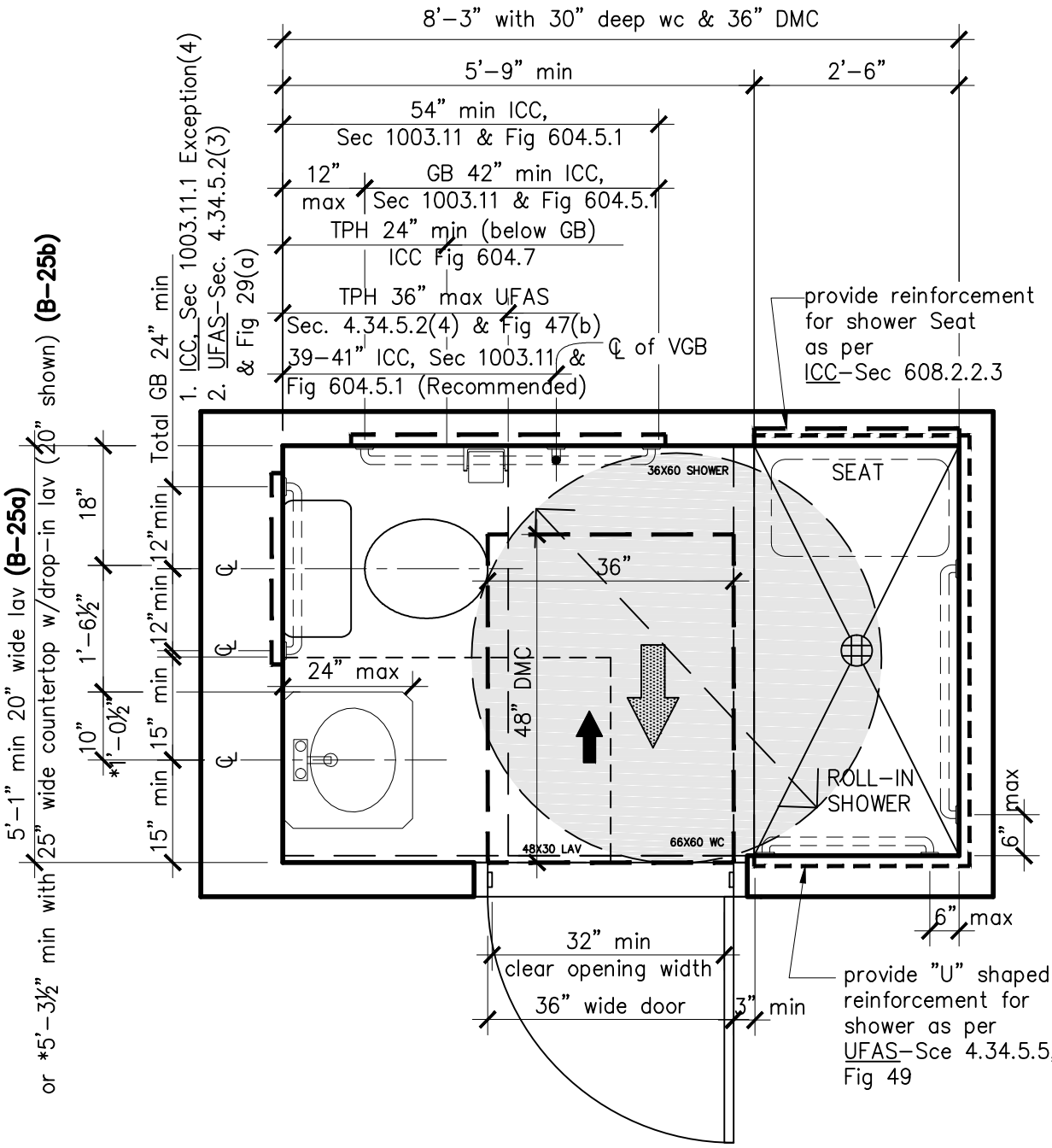

B-25a=8'-3"x5'-1"

*B-25b=8'-3"x5'-3½"

- door maneuvering clearance is required only outside of the bathroom
- Roll-in shower shall not have more than 1:50 pitch (2% max.) as the shower area is used for 60" Dia turning space & DMC

Min. Bathroom Size as per BC-Sec. 1107.2.2 Exception 1, i.e. Type "A" of ICC-Sec 1003.11; & UFAS with 60" Dia Turning space; Maneuvering Clearances at all Bathroom Fixtures & Door (Front Door, Center, Adjacent to Lav); & Grab Bar Locations

B-25a

B-25b

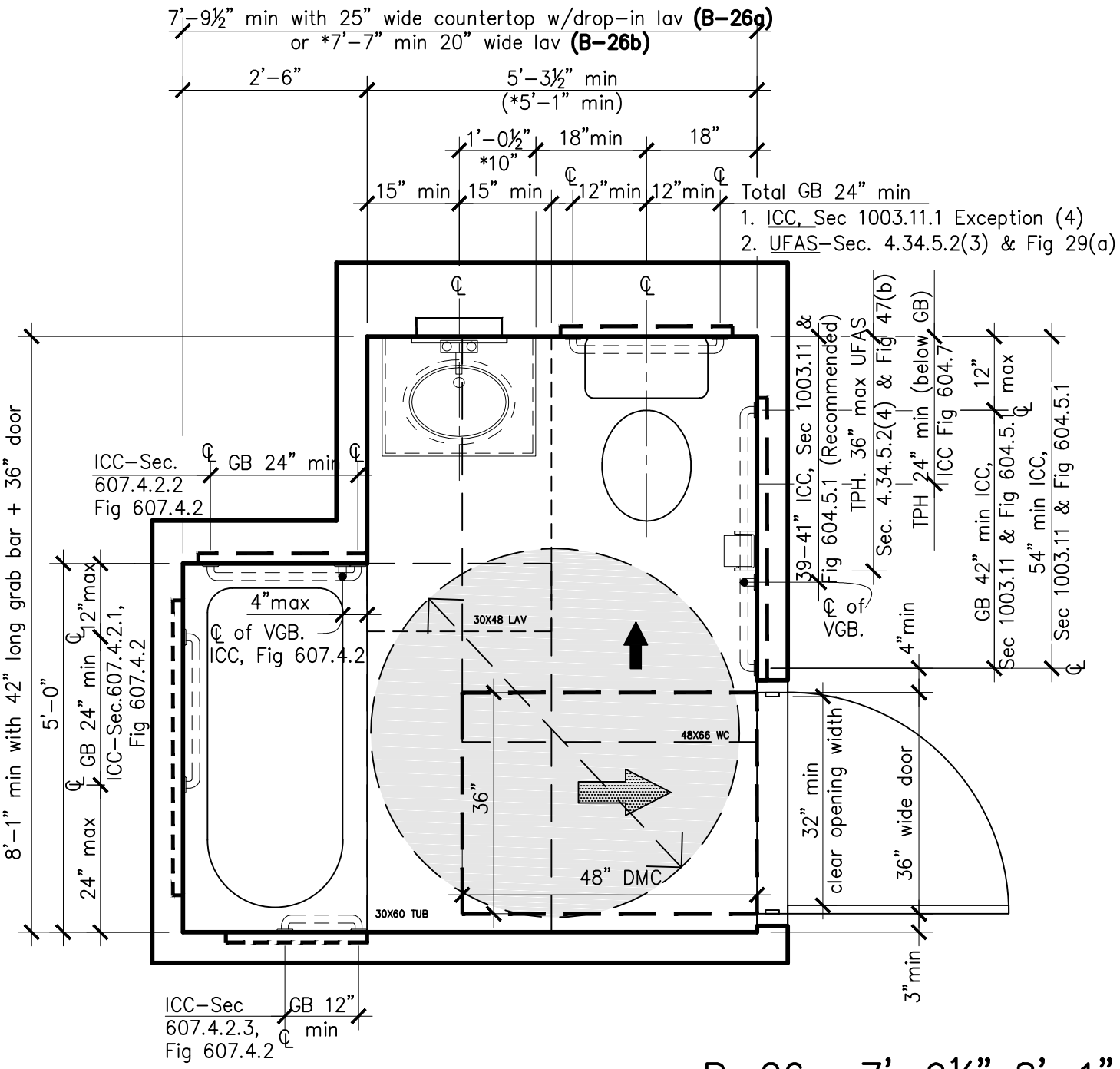

B-26a=7'-9½"x8'-1"

*B-26b=7'-7"x8'-1"

• door maneuvering clearance is required only outside of the bathroom

Min. Bathroom Size as per BC-Sec. 1107.2.2 Exception 1, i.e. Type "A" of ICC-Sec 1003.11; & UFAS with 60" Dia Turning space; Maneuvering Clearances at all Fixtures & Door (Side Door-Corner, Adjacent to WC); & Grab Bar Locations

B-26a

B-26b

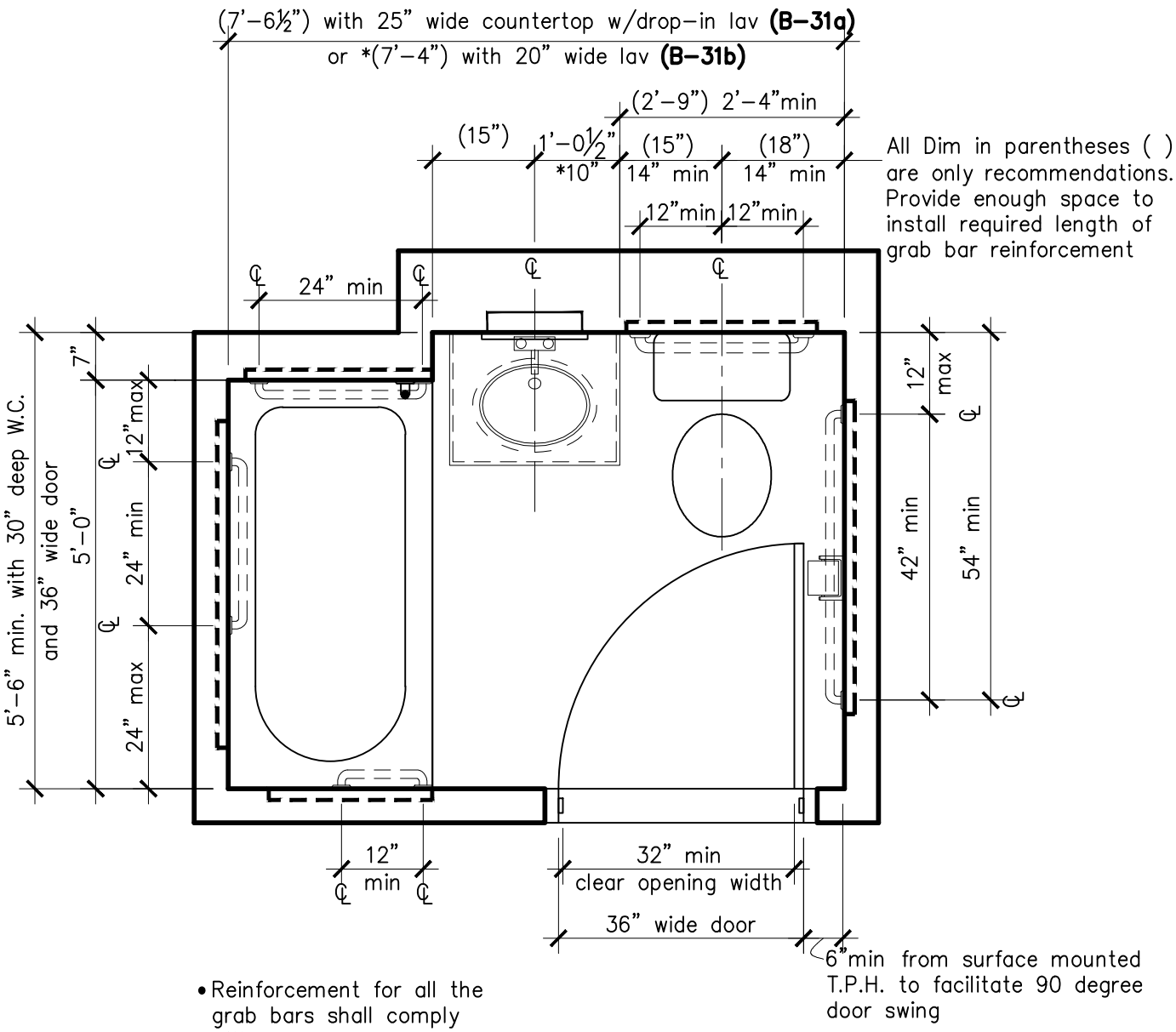

- Reinforcement for all the grab bars shall comply with

1. FHA Guidelines, Requirement 6, Fig 3,4, & 5
2. ICC 2009–Sec 1104.11.1, 604.5, 607.4, & 608.3 As per BC 2014–Sec 107.2.2,

B–31a=7'–6½"x5'–6"

*B–31b=7'–4"x5'–6"

- door maneuvering clearance is only required outside of the bathroom

Min. Bathroom Size as per BC–Sec 1007.2.2, Exception 2
(Front Door, In–Swing, Opposite to WC)

B–31a
B–31b

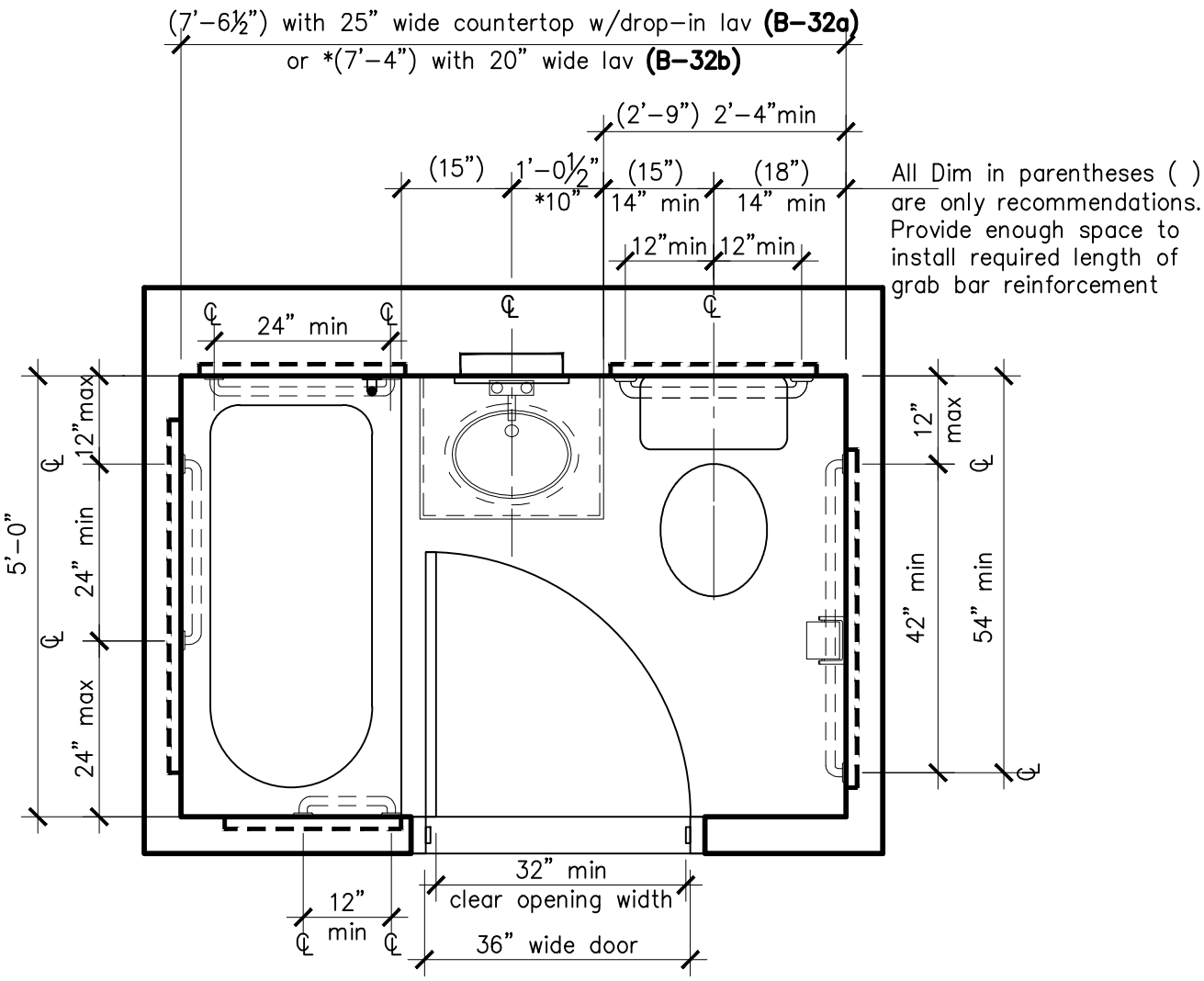

- Reinforcement for all the grab bars shall comply with

1. FHA Guidelines, Requirement 6, Fig 3,4, & 5
2. ICC 2009–Sec 1104.11.1, 604.5, 607.4, & 608.3 As per BC 2014–Sec 107.2.2,

B–32a=7'–6½"x5'–0"

*B–32b=7'–4"x5'–0"

- door maneuvering clearance is only required outside of the bathroom

Min. Bathroom Size as per BC–Sec 1007.2.2, Exception 2
(Front Door, In–Swing, Opposite to WC)

B–32a
B–32b

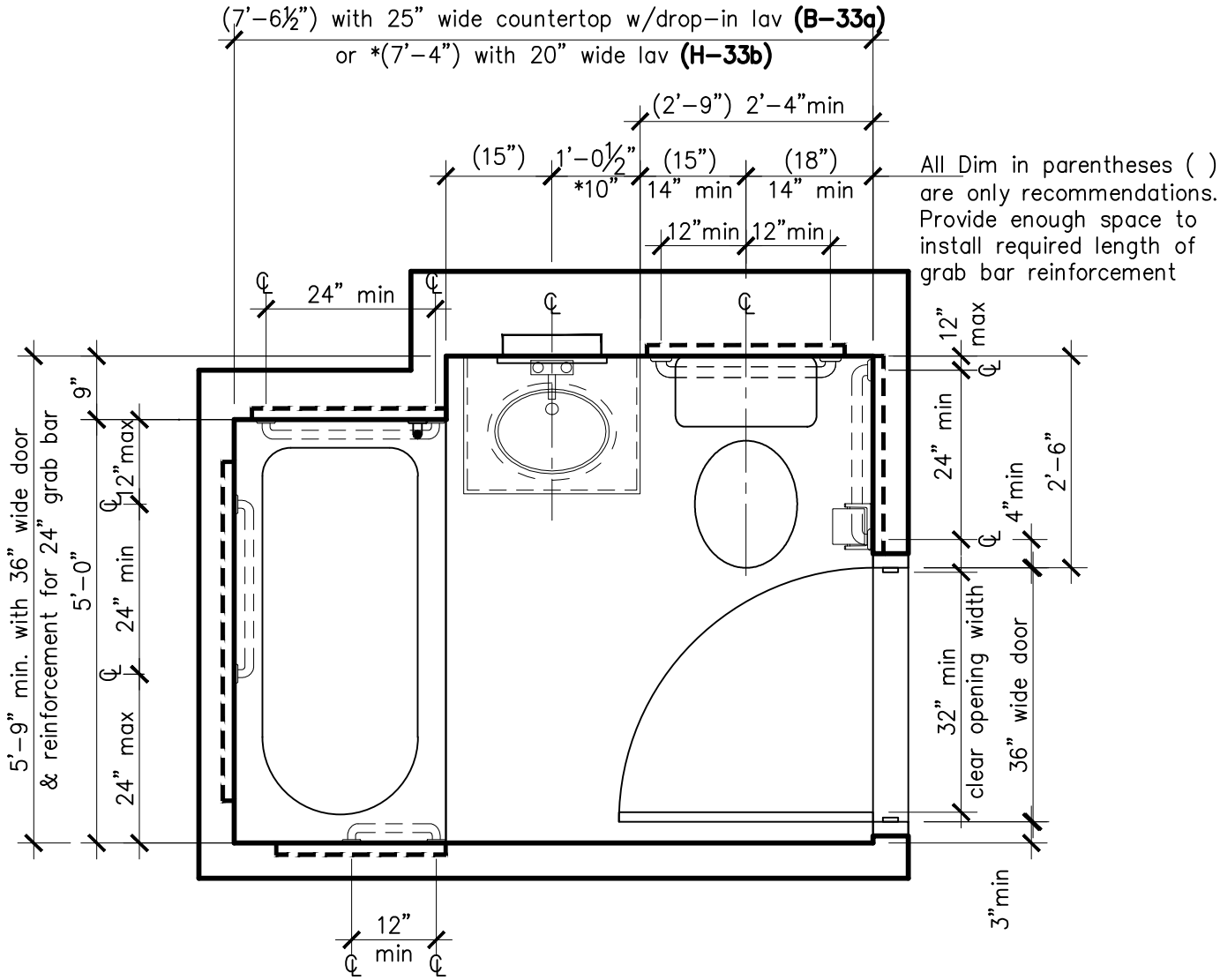

- Reinforcement for all the grab bars shall comply with

1. FHA Guidelines, Requirement 6, Fig 3,4, & 5
2. ICC 2009–Sec 1104.11.1, 604.5, 607.4, & 608.3 As per BC 2014–Sec 107.2.2,

B–33a=7'–6½"x5'–9"

*B–33b=7'–4"x5'–9"

- door maneuvering clearance is only required outside of the bathroom

Min. Bathroom Size as per BC–Sec 1007.2.2, Exception 2
(Side Door, In–Swing, Adjacent to WC)

B–33a
B–33b

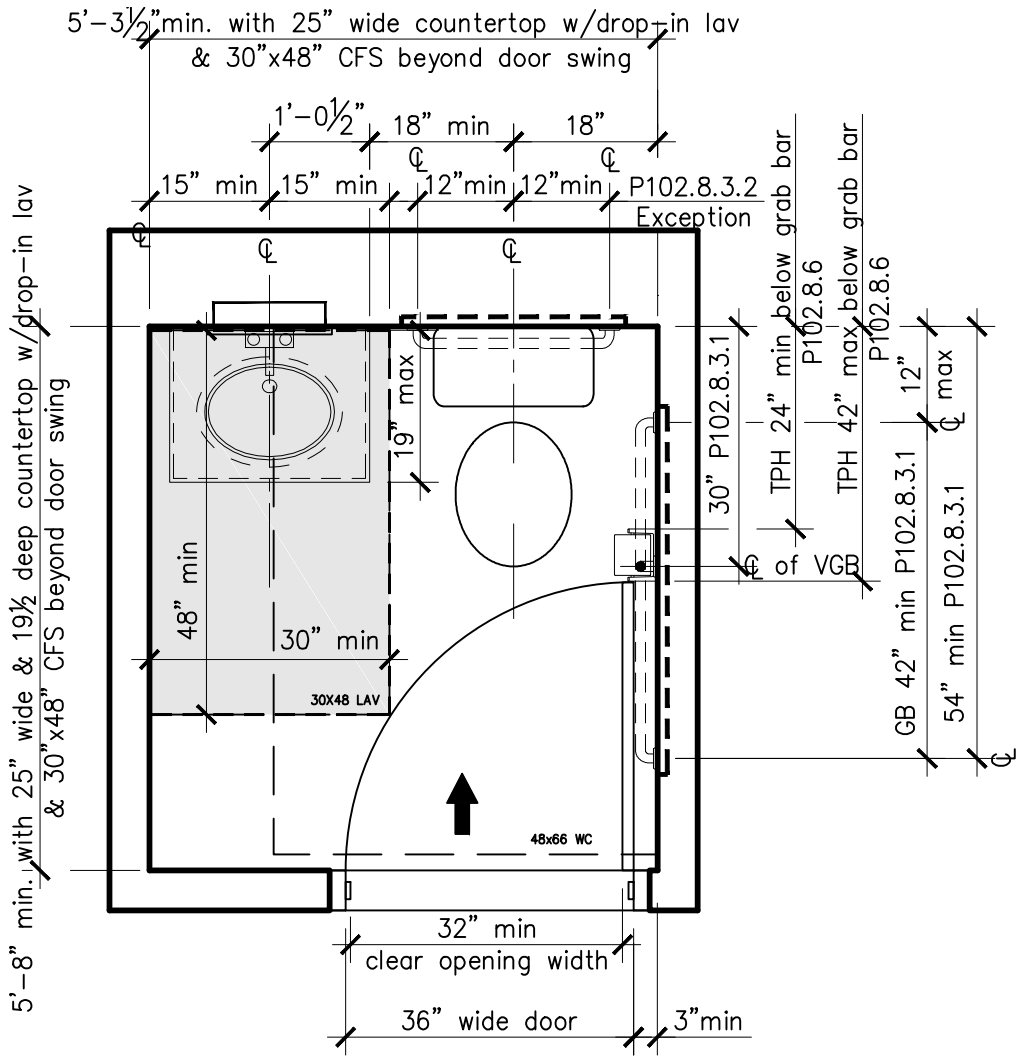

5'-3½" x 5'-8"

- door maneuvering clearance is required only outside of the bathroom
- Door may swing into CFS of fixtures where 30"x48" CFS is provided beyond the arc of the door as per BC-Sec P102.3, Exception

Min. Half-Bath CFS Size as per BC-Appendix "P"
with 30"x48" CFS Beyond In-Swing Door
(Front Door, Opposite to WC); Maneuvering Clearances at all Fixtures; & Grab Bar Locations

HB-1a

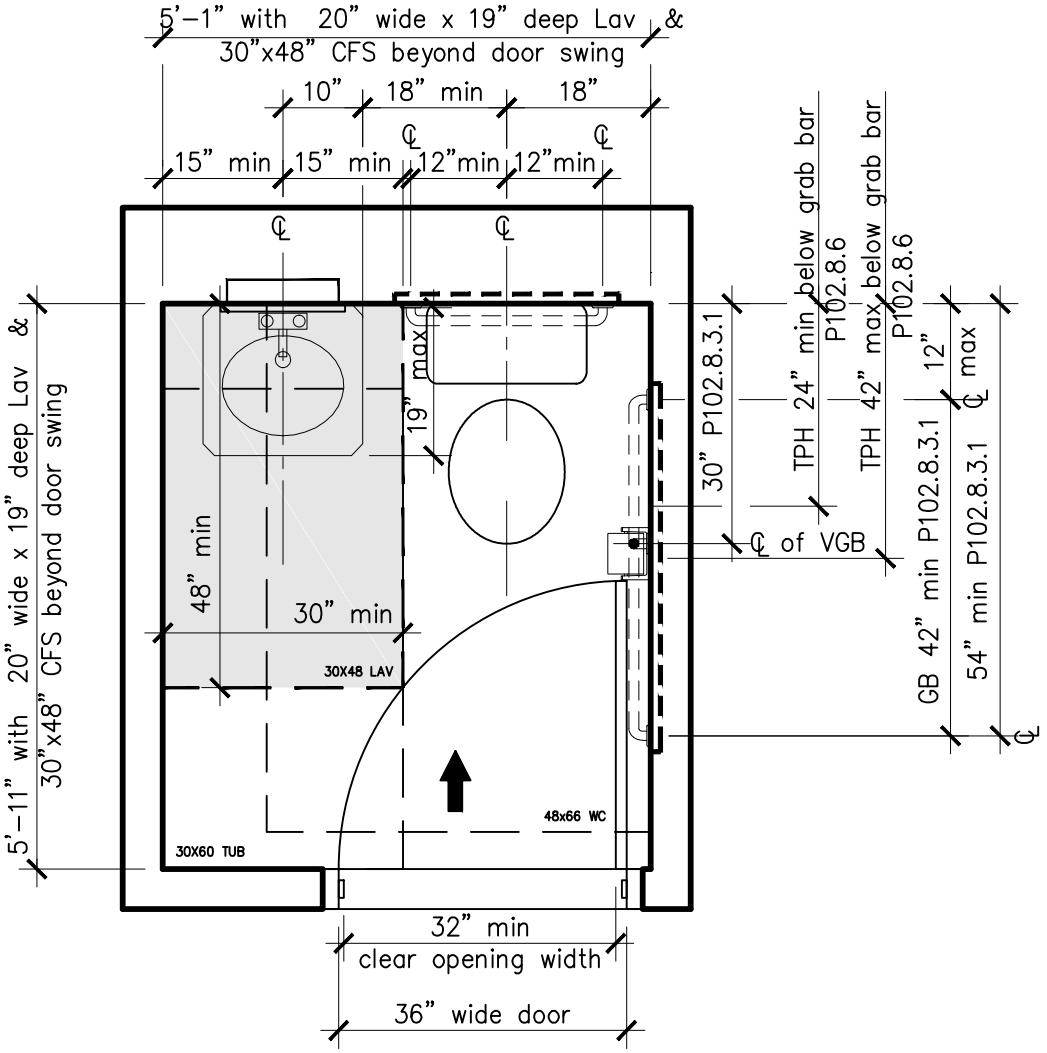

5'–1" x 5'–11"

- door maneuvering clearance is required only outside of the bathroom
- Door may swing into CFS of fixtures where 30"x48" CFS is provided beyond the arc of the door as per BC–Sec P102.3, Exception

Min. Half–Bath Size as per BC–Appendix "P" with 30"x48" CFS Beyond In–Swing Door (Front Door, Opposite to WC); Maneuvering Clearances at all Fixtures; & Grab Bar Locations

HB–1b

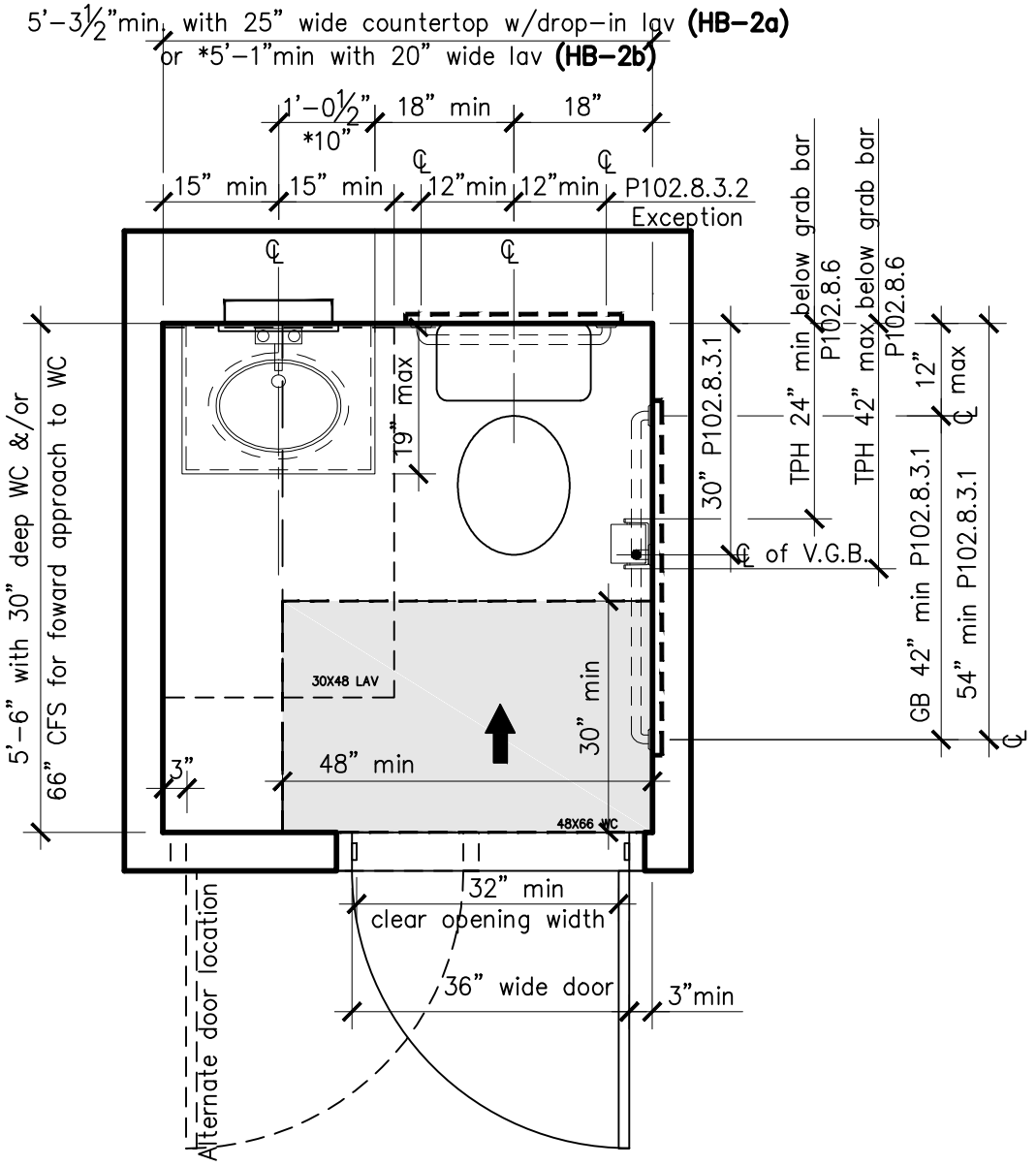

HB-2a=5'-3½"x5'-6'

*HB-2b=5'-1"x5'-6"

- door maneuvering clearance is required only outside of the bathroom

Min. Half-Bath Size as per BC-Appendix "P"
with Maneuvering Clearances at all Fixtures; & Grab Bar locations
(Front Door, Out-Swing, Opposite to WC or Lav)

HB-2a
HB-2b

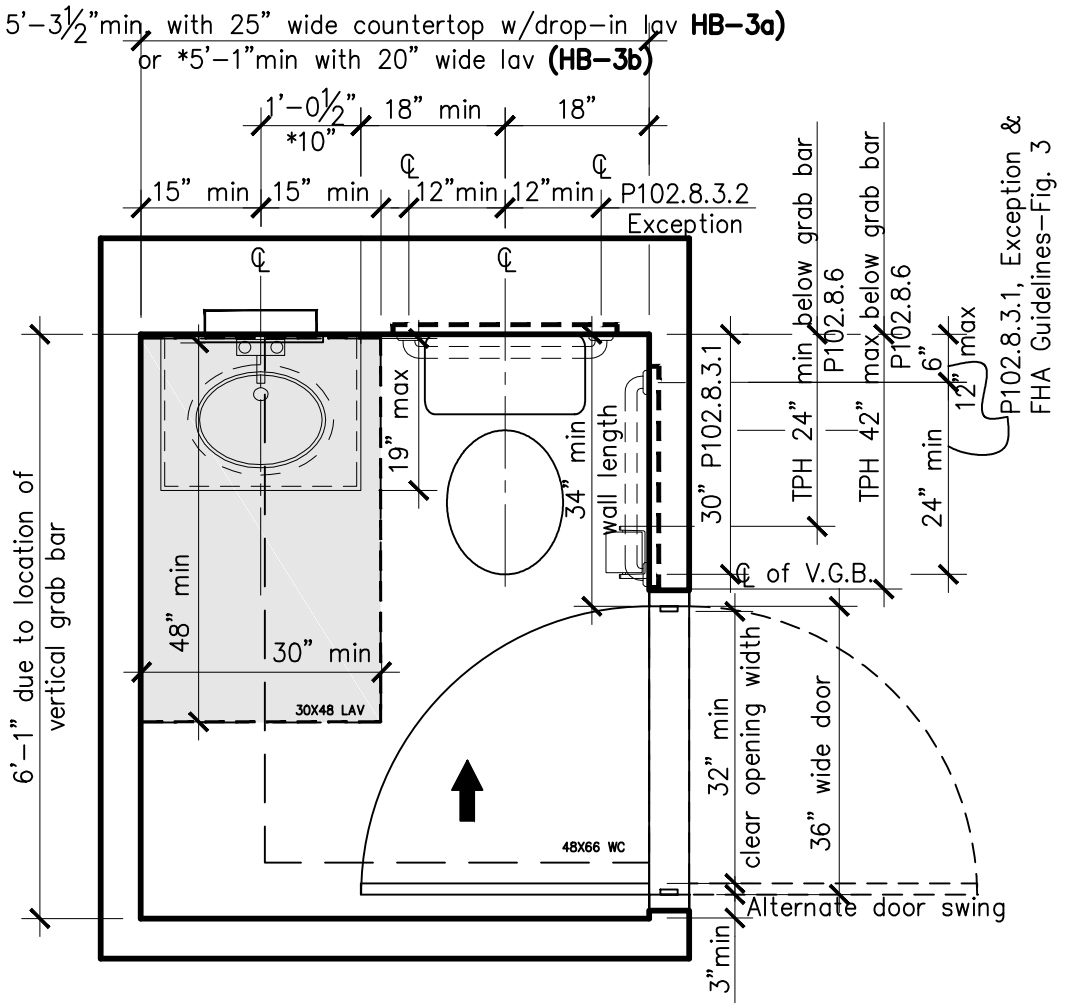

HB-3a=5'-3½"x6'-1"

*HB-3b=5'-1"x6'-1"

- door maneuvering clearance is required only outside of the bathroom
- Door may swing into CFS of fixtures where 30"x48" CFS is provided beyond the arc of the door as per BC-Sec P102.3, Exception

Min. Half-Bath Size as per BC-Appendix "P"
with 30"x48" CFS Beyond In-Swing Door
(Side Door, In-Swing or Out-Swing, Adjacent to WC);
Maneuvering Clearances at all Fixtures; & Grab Bar Locations

HB-3a
HB-3b

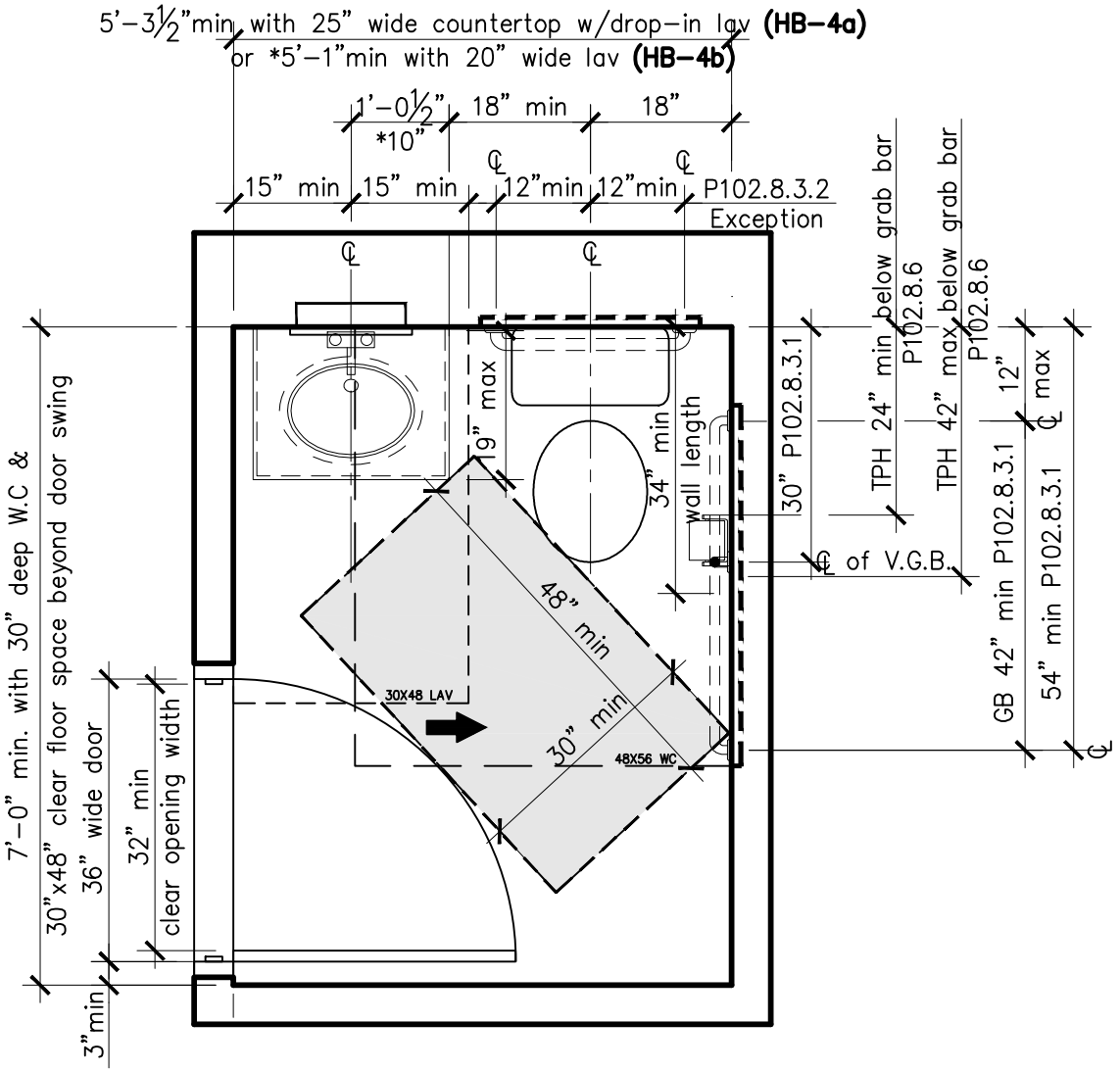

HB-4a=5'-3½"x7'-0"

*HB-4b=5'-1"x7'-0"

- door maneuvering clearance is required only outside of the bathroom
- Door may swing into CFS of fixtures where 30"x48" CFS is provided beyond the arc of the door as per BC-Sec P102.3, Exception

Min. Half-Bath Size as per BC-Appendix "P" with 30"x48" CFS Beyond In-Swing Door (Side Door, Adjacent to Lav); Maneuvering Clearances at all Fixtures; & Grab Bar Locations

HB-4a

HB-4b

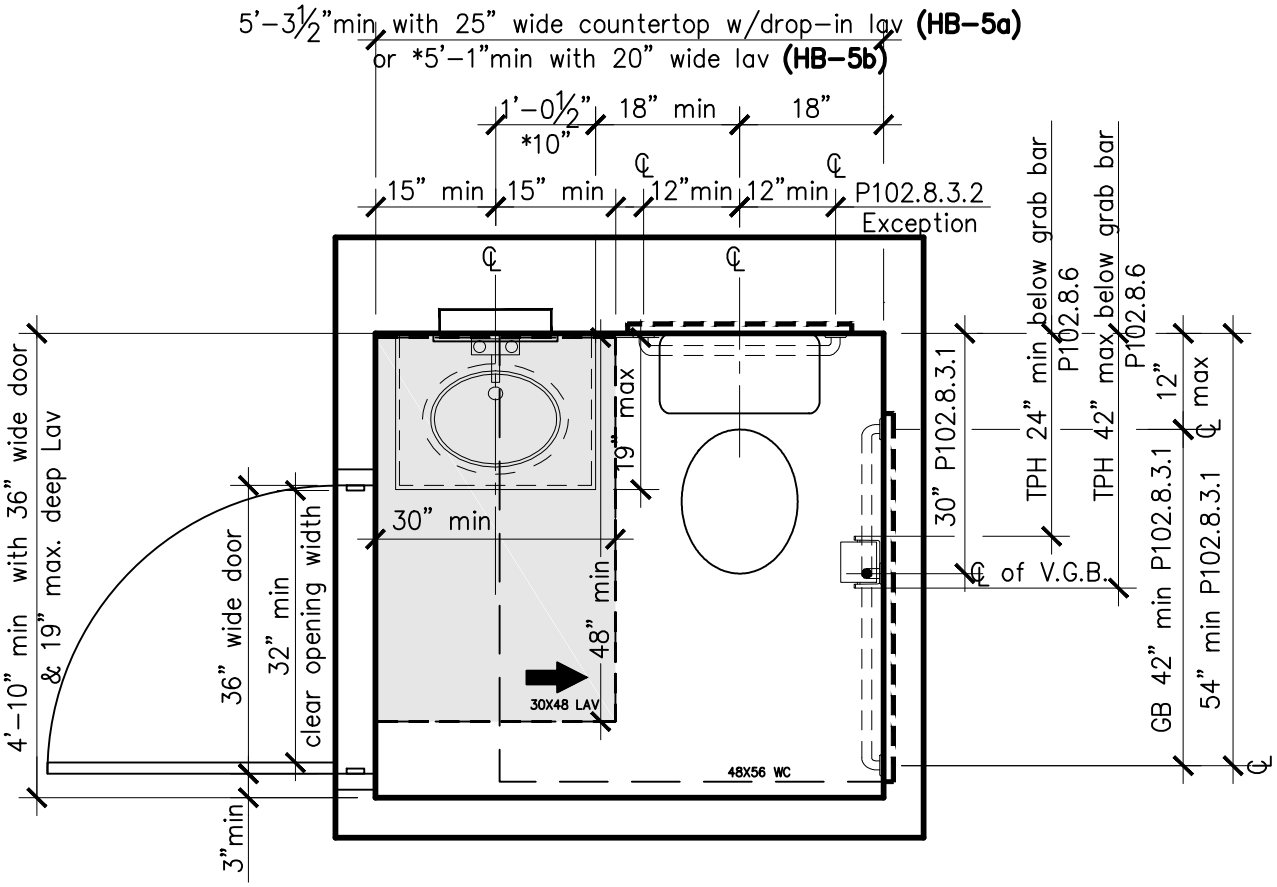

HB-5a=5'-3½"x5'-0'

*HB-5b=5'-1"x5'-0"

- door maneuvering clearance is required only outside of the bathroom

Min. Half-Bath Size as per BC-Appendix "P"
with Maneuvering Clearances at all Fixtures; & Grab Bar Locations
(Side Door, Out-Swing, Adjacent to Lav)

HB-5a
HB-5b

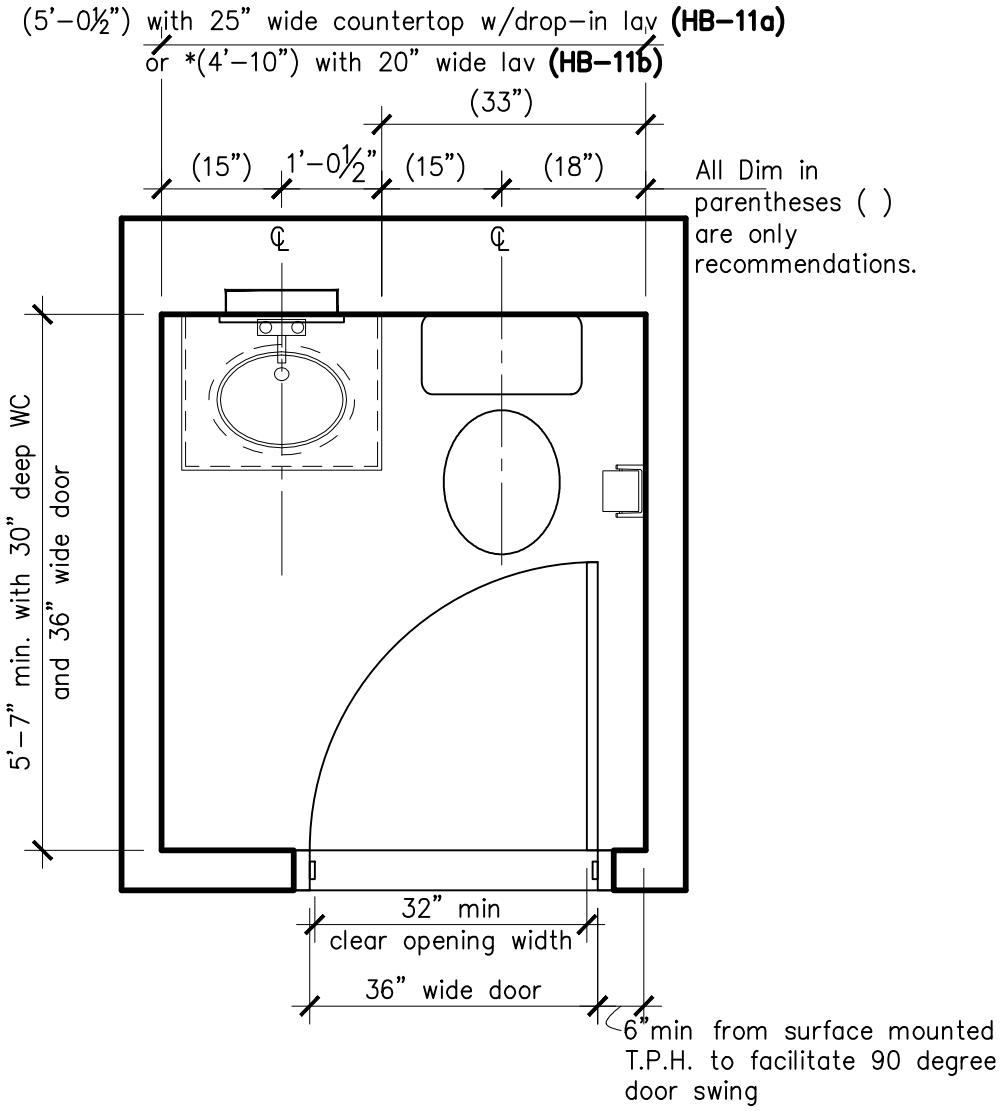

HB–11a=5'–0½"x5'–7"

*HB–11b=4'–10"x5'–7"

- door maneuvering clearance is only required outside of the bathroom

Min. Half–Bath Size as per BC–Sec 1007.2.2, Exception 2
(Front Door, In–Swing, Opposite to WC)

HB–11a
HB–11b

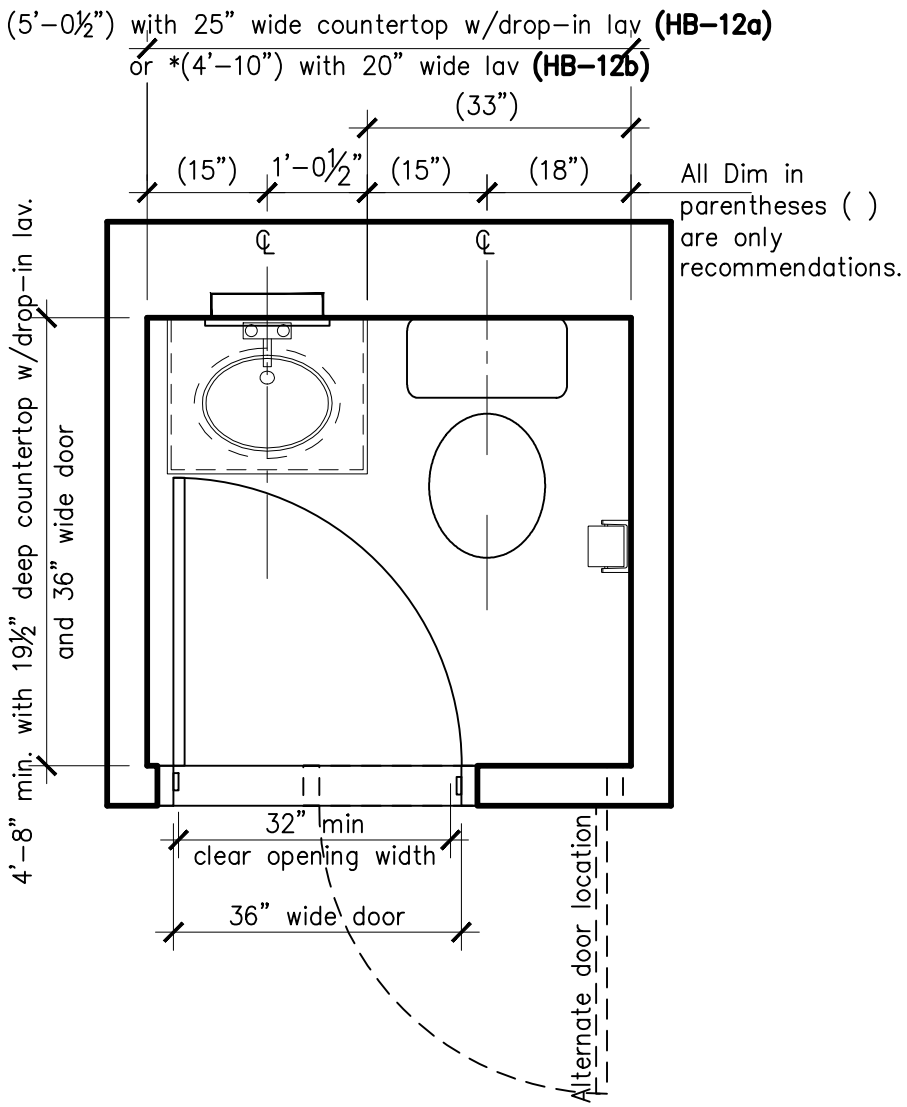

HB–12a=5'–0½"x4'–8'

*HB–12b=4'–10"x4'–8"

- door maneuvering clearance is only required outside of the bathroom

Min. Half–Bath Size as per BC–Sec 1007.2.2, Exception 2
(Front Door, In–Swing, Opposite to Lav/
or Out–Swing, Opposite to WC)

HB–12a

HB–12b

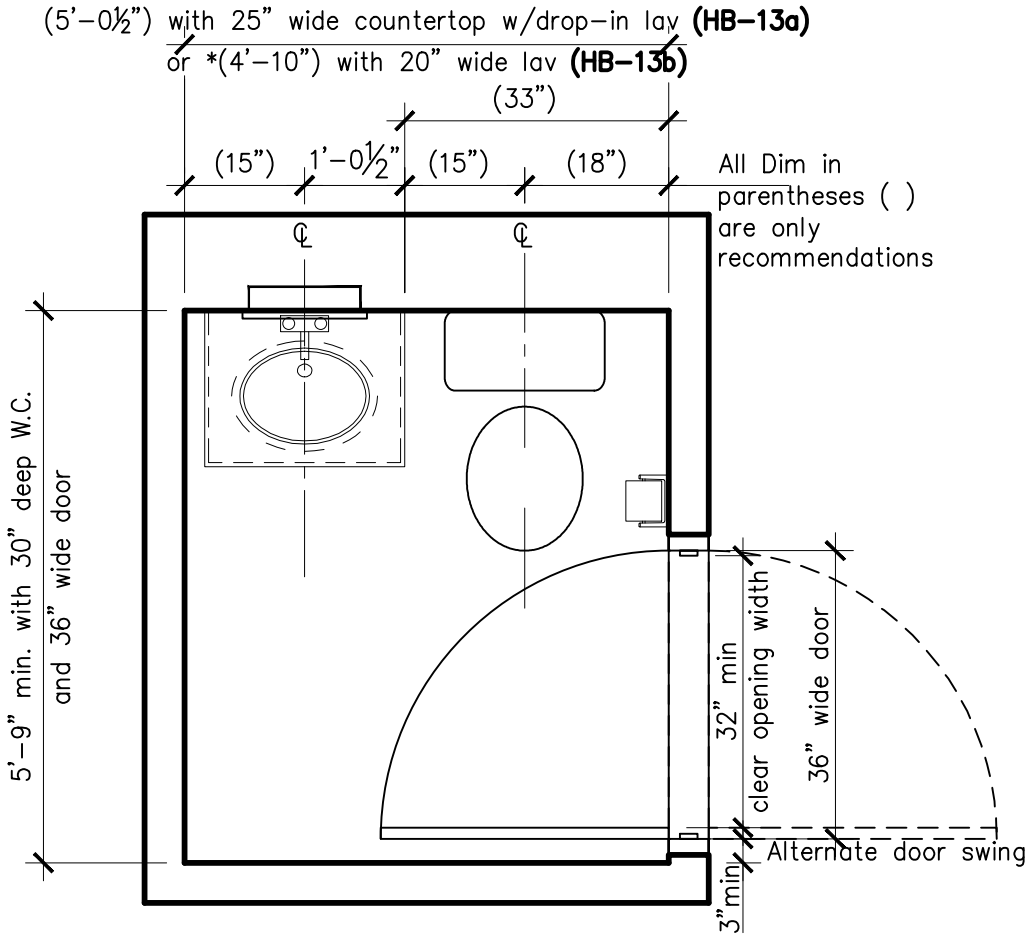

HB–13a=5'–0½"x5'–9"

*HB–13b=4'–10"x5'–9"

- door maneuvering clearance is only required outside of the bathroom

Min. Half–Bath Size as per BC–Sec 1007.2.2, Exception 2
(Side Door, In–Swing or Out–Swing, Adjacent to WC)

HB–13a
HB–13b

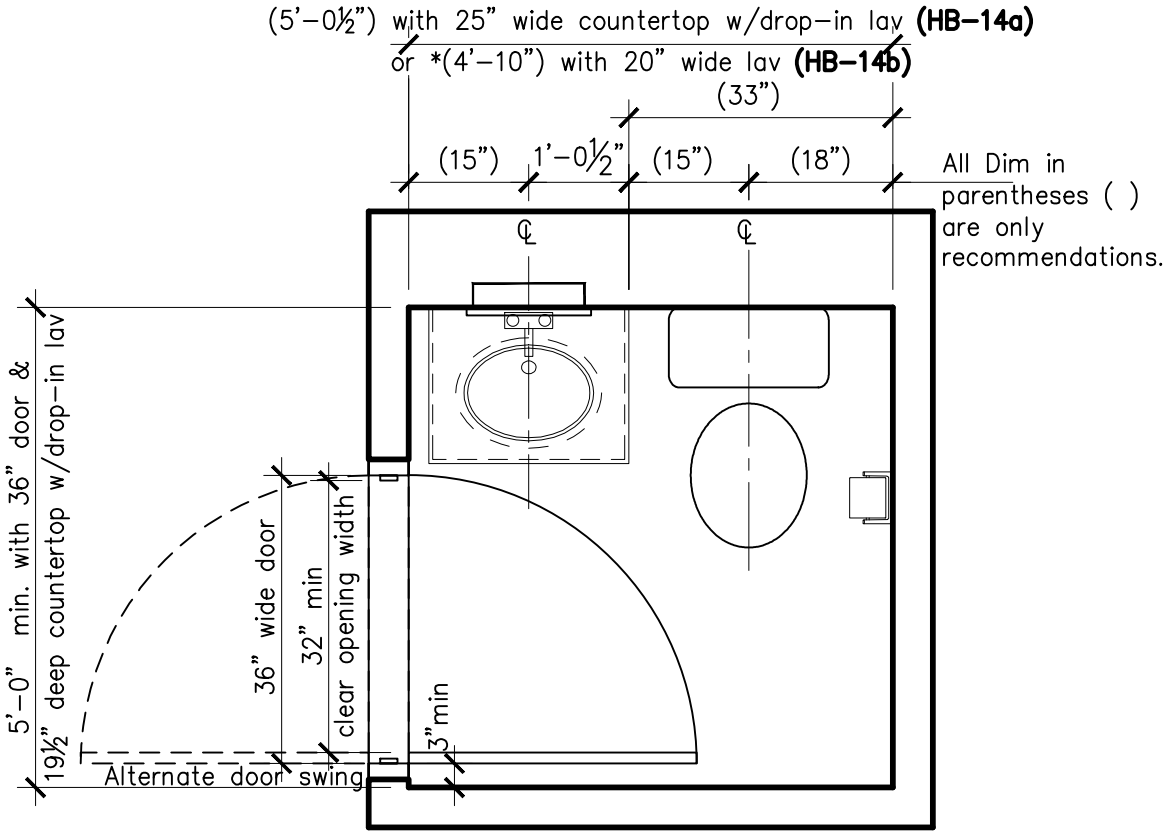

HB–14a=5'–0½"x5'–0"

*HB–14b=4'–10"x5'–0"

- door maneuvering clearance is only required outside of the bathroom

Min. Half–Bath Size as per BC–Sec 1007.2.2, Exception 2
(Side Door, In–Swing or Out–Swing, Adjacent to Lav)

HB–14a
HB–14b

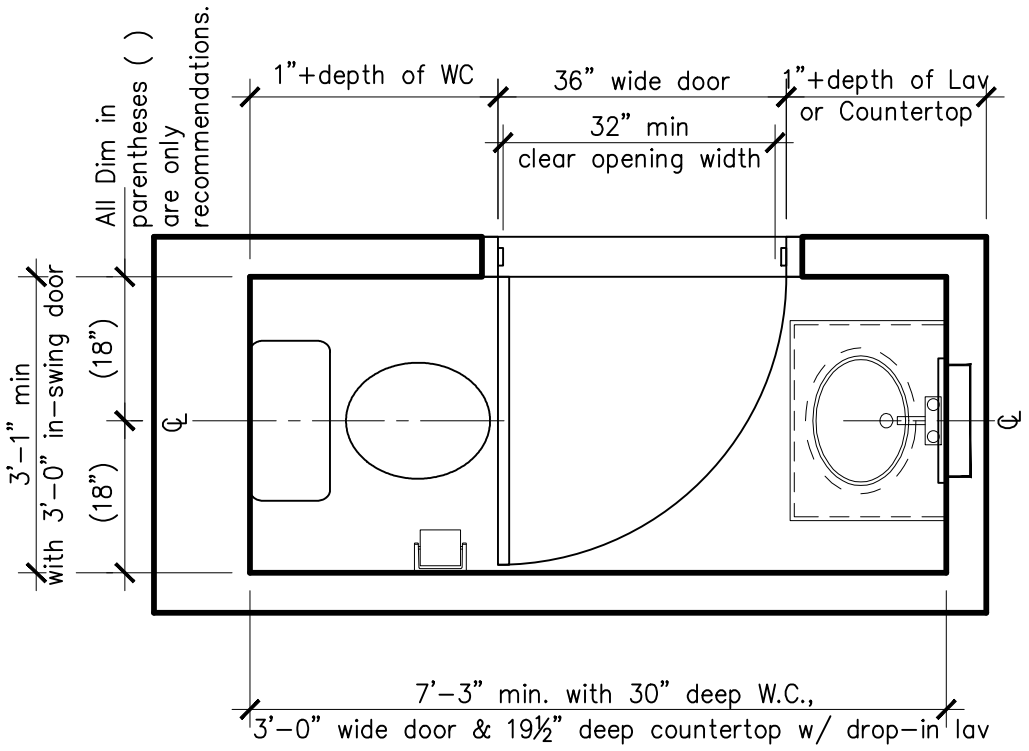

PR-4=7'-2"x3'-1"

- door maneuvering clearance is only required outside of the bathroom

Min. Half-Bath Size as per BC-Sec 1007.2.2, Exception 2
(Front Door-Center, In-Swing)

HB-15

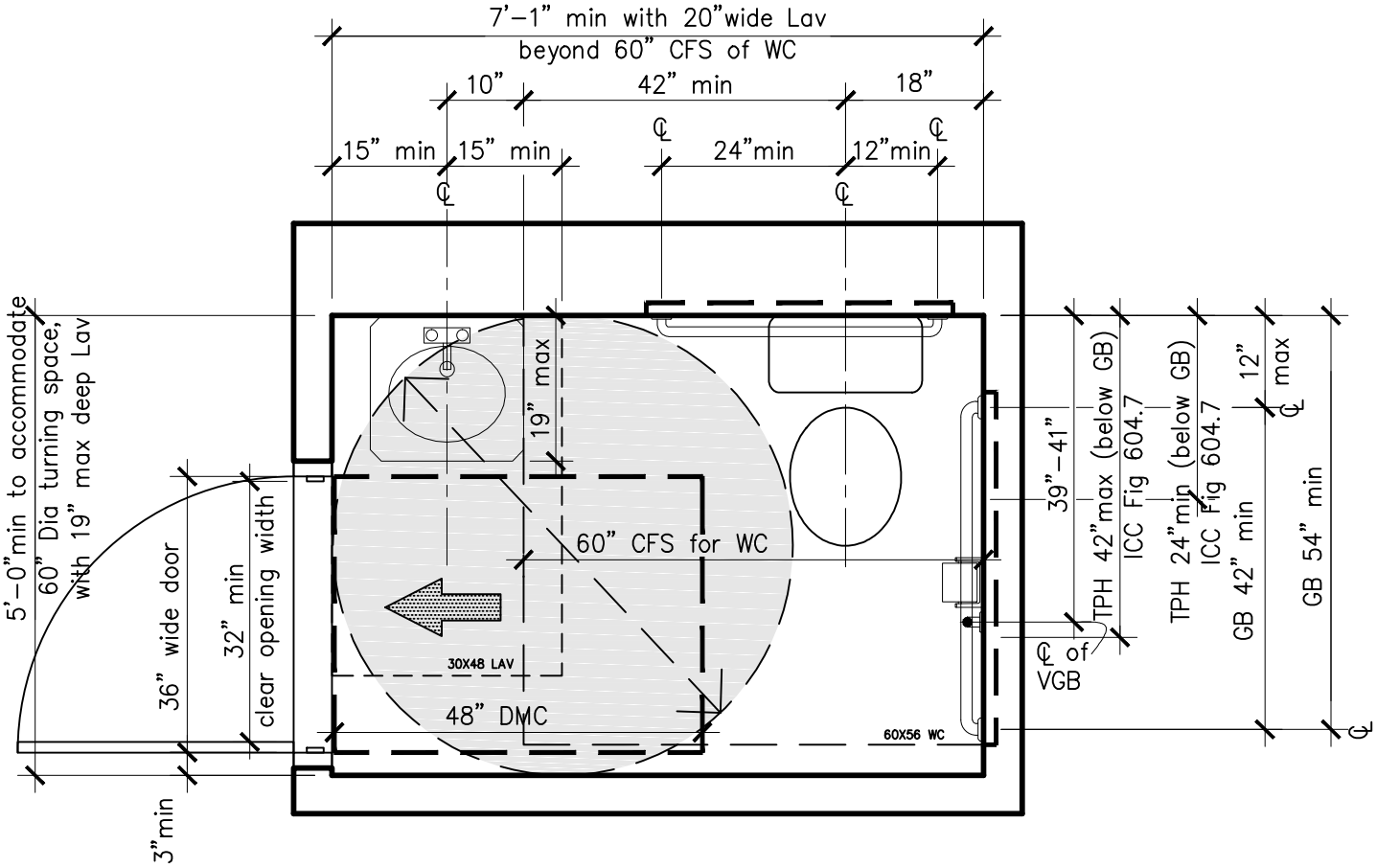

7'–1"x5'–0"

- door maneuvering clearance is required both inside & outside of the bathroom
- Lav cannot overlap the required clear floor space of the WC

Min. Common/Public Single–User Toilet Room as per ANSI, BC, UFAS & ADA with 60" Dia Turning Space; Maneuvering Clearances at all Fixtures & Door (Side Door, Out–Swing, Adjacent to Lav); & Grab Bar Locations

PT–1

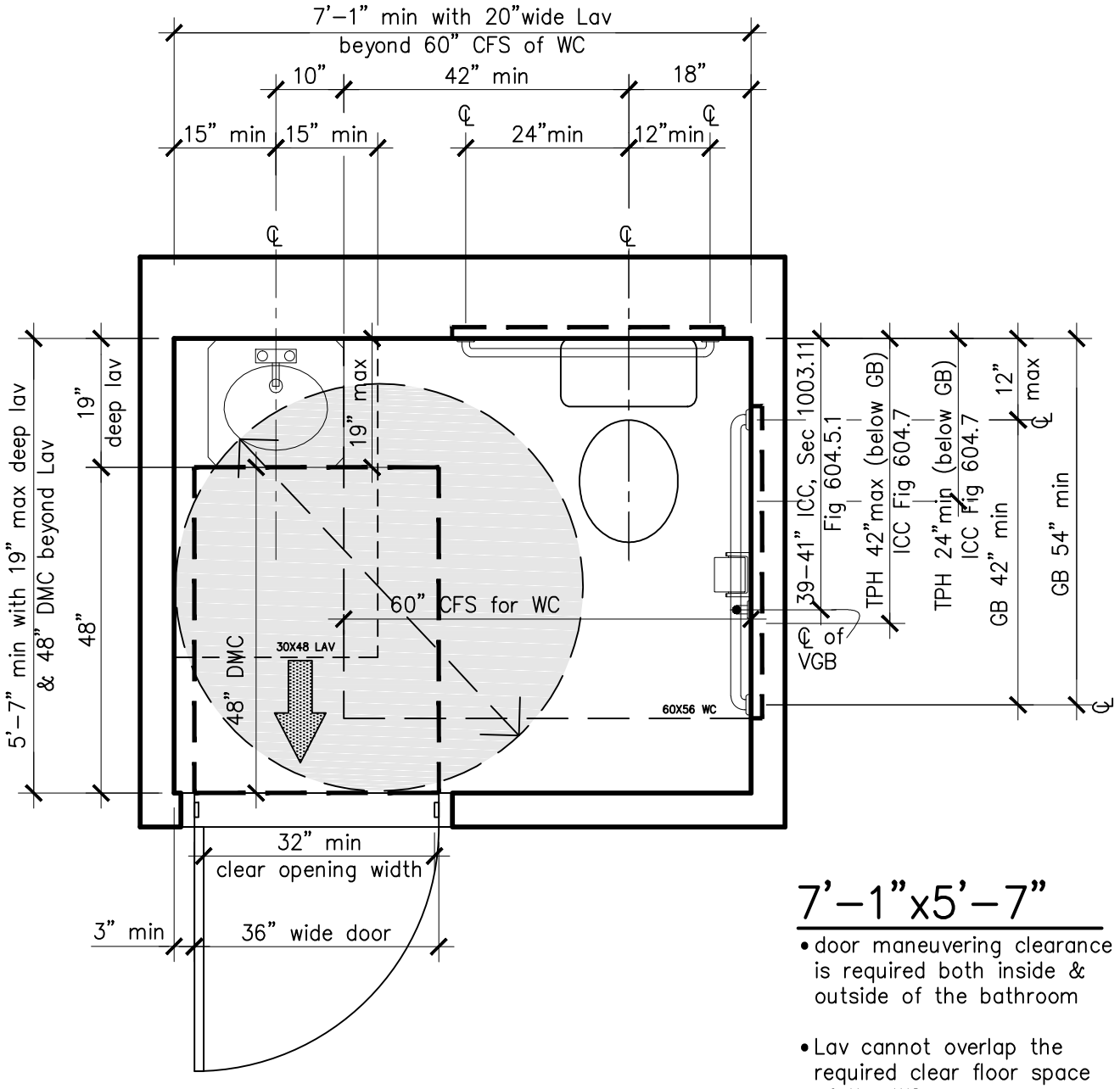

7'–1"x5'–7"

- door maneuvering clearance is required both inside & outside of the bathroom
- Lav cannot overlap the required clear floor space of the WC

Min. Common/Public Single–User Toilet Room as per ANSI, BC, UFAS & ADA with 60" Dia Turning Space; Maneuvering Clearances at all Fixtures & Door (Front Door, Out–Swing, Opposite to Lav); & Grab Bar Locations

PT–2

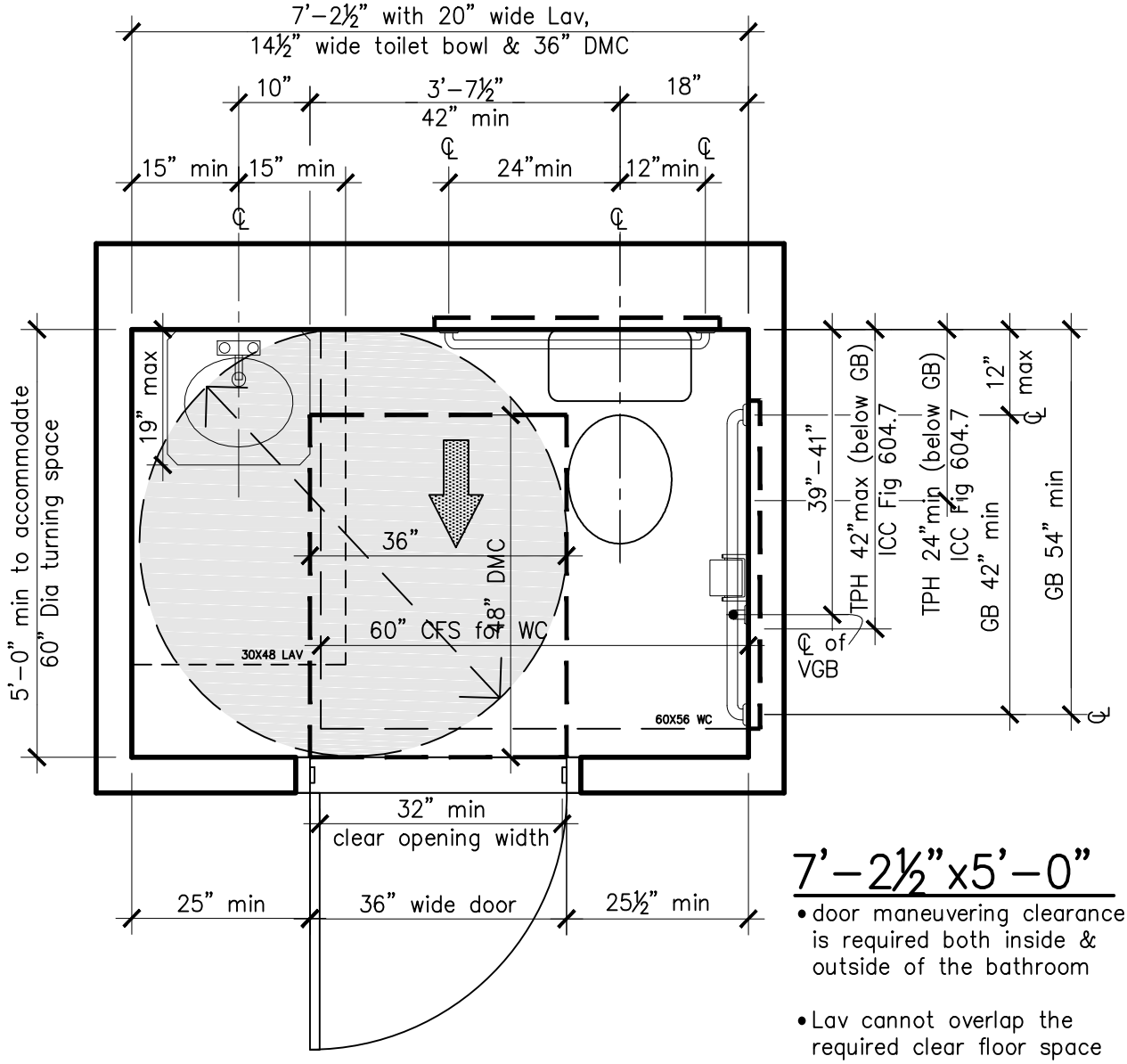

7'–2½"x5'–0"

- door maneuvering clearance is required both inside & outside of the bathroom
- Lav cannot overlap the required clear floor space of the WC

Min. Common/Public Single–User Toilet Room as per ANSI, BC, UFAS & ADA with 60" Dia Turning Space; Maneuvering Clearances at all Fixtures & Door (Front Door–Center, Out–Swing,); & Grab Bar Locations

PT–3

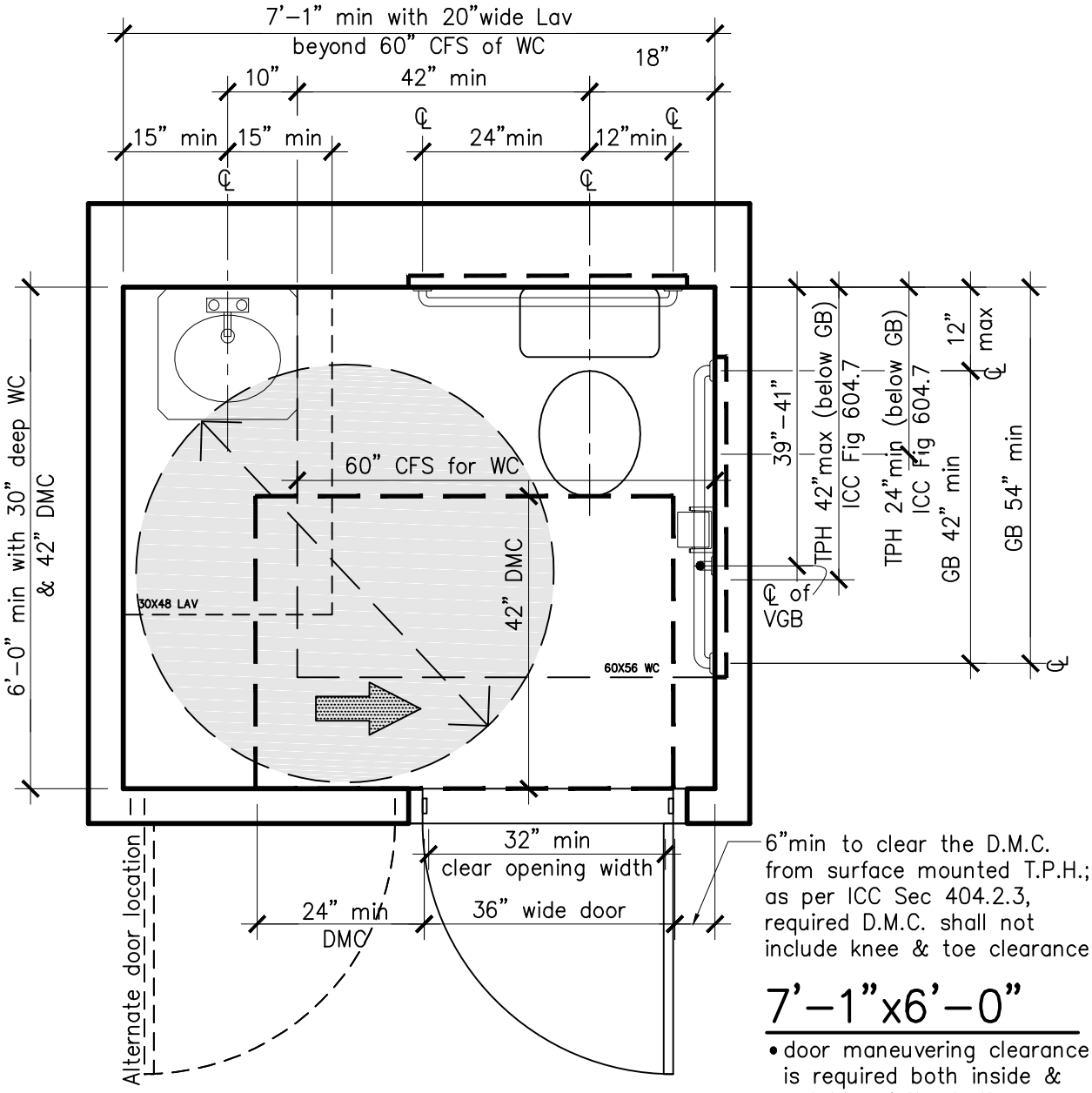

6"min to clear the D.M.C. from surface mounted T.P.H.; as per ICC Sec 404.2.3, required D.M.C. shall not include knee & toe clearance

7'–1"x6'–0"

- door maneuvering clearance is required both inside & outside of the bathroom
- Lav cannot overlap the required clear floor space of the WC

Min. Common/Public Single–User Toilet Room as per ANSI, BC, UFAS & ADA with 60" Dia Turning Space; Maneuvering Clearances at all Fixtures & Door (Front Door, Out–Swing, Opposite to WC); & Grab Bar Locations

PT–4

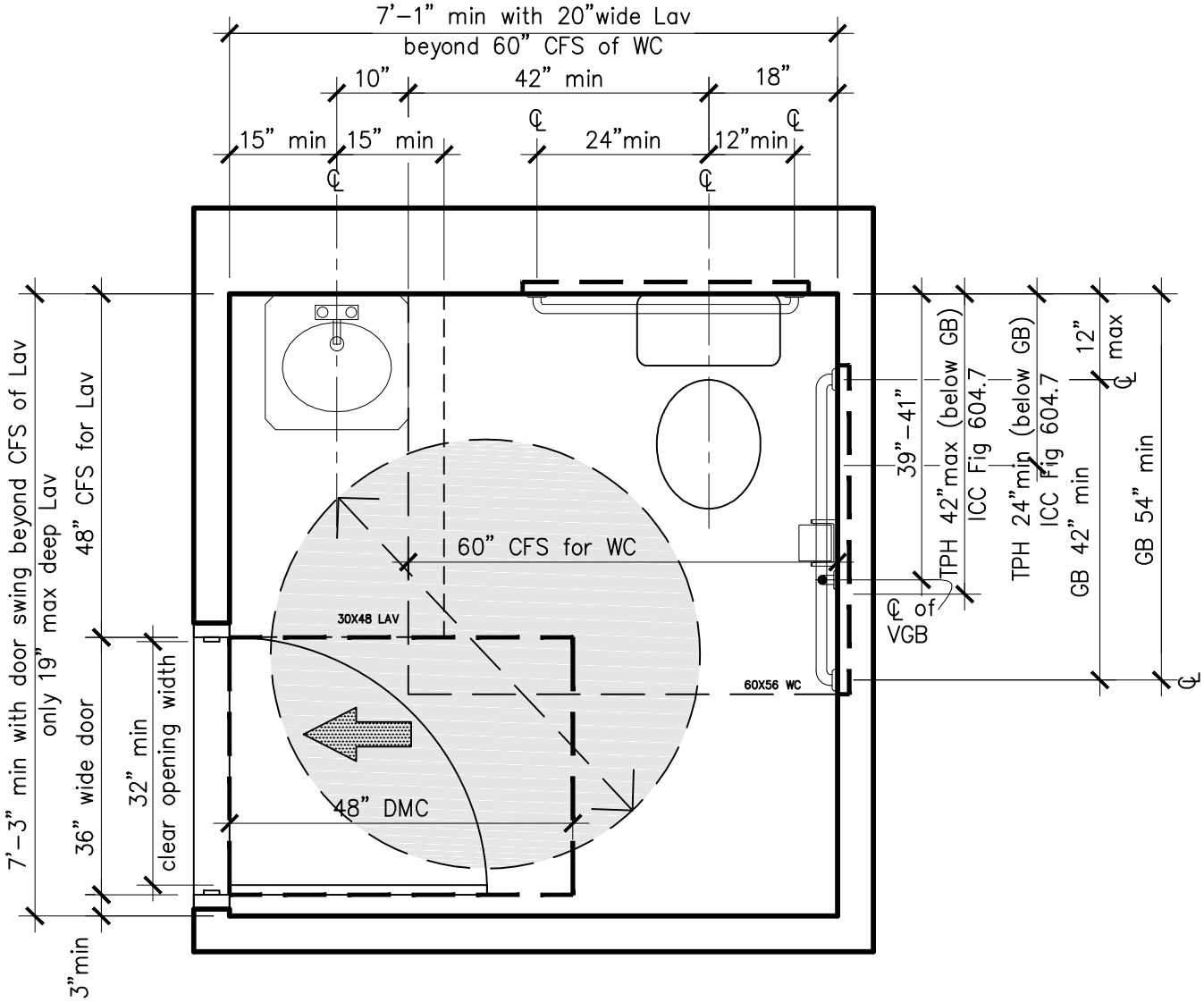

7'–1"x7'–3"

- door maneuvering clearance is required both inside & outside of the bathroom
- Lav cannot overlap the required clear floor space of the WC

Min. Common/Public Single–User Toilet Room as per ANSI, BC, UFAS & ADA with 60" Dia Turning Space; CFS of Lav & WC beyond In–Swing Door (Side Door, Adjacent to Lav); Maneuvering Clearances at all Fixtures & Door & Grab Bar Locations

PT–5

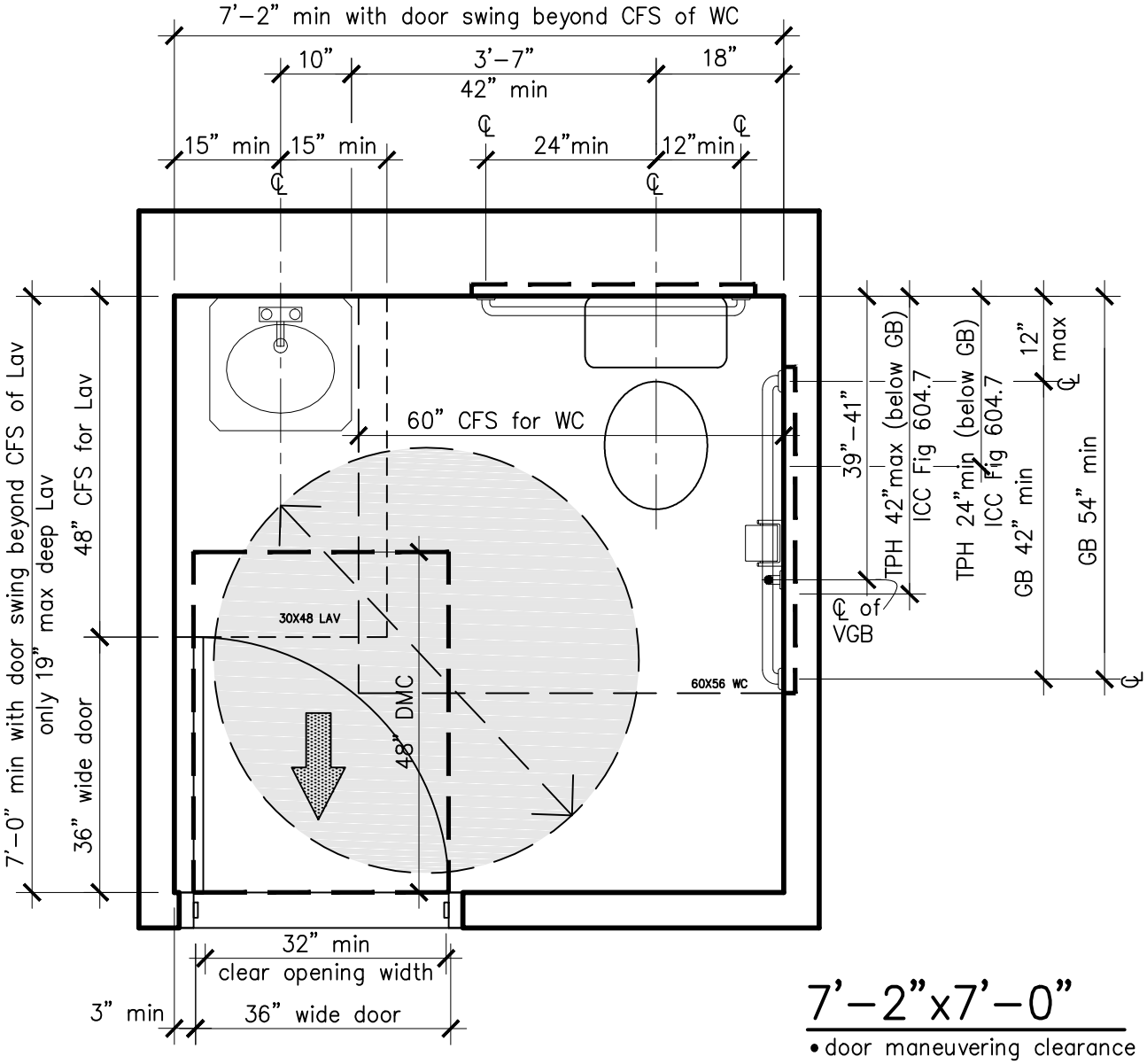

7'–2"x7'–0"

- door maneuvering clearance is required both inside & outside of the bathroom
- Lav cannot overlap the required clear floor space of the WC

Min. Common/Public Single–User Toilet Room as per ANSI, BC, UFAS & ADA with 60" Dia Turning Space; CFS of Lav & WC beyond In–Swing Door (Front Door, Opposite to Lav); Maneuvering Clearances at all Fixtures & Door; & Grab Bar Locations

PT–6

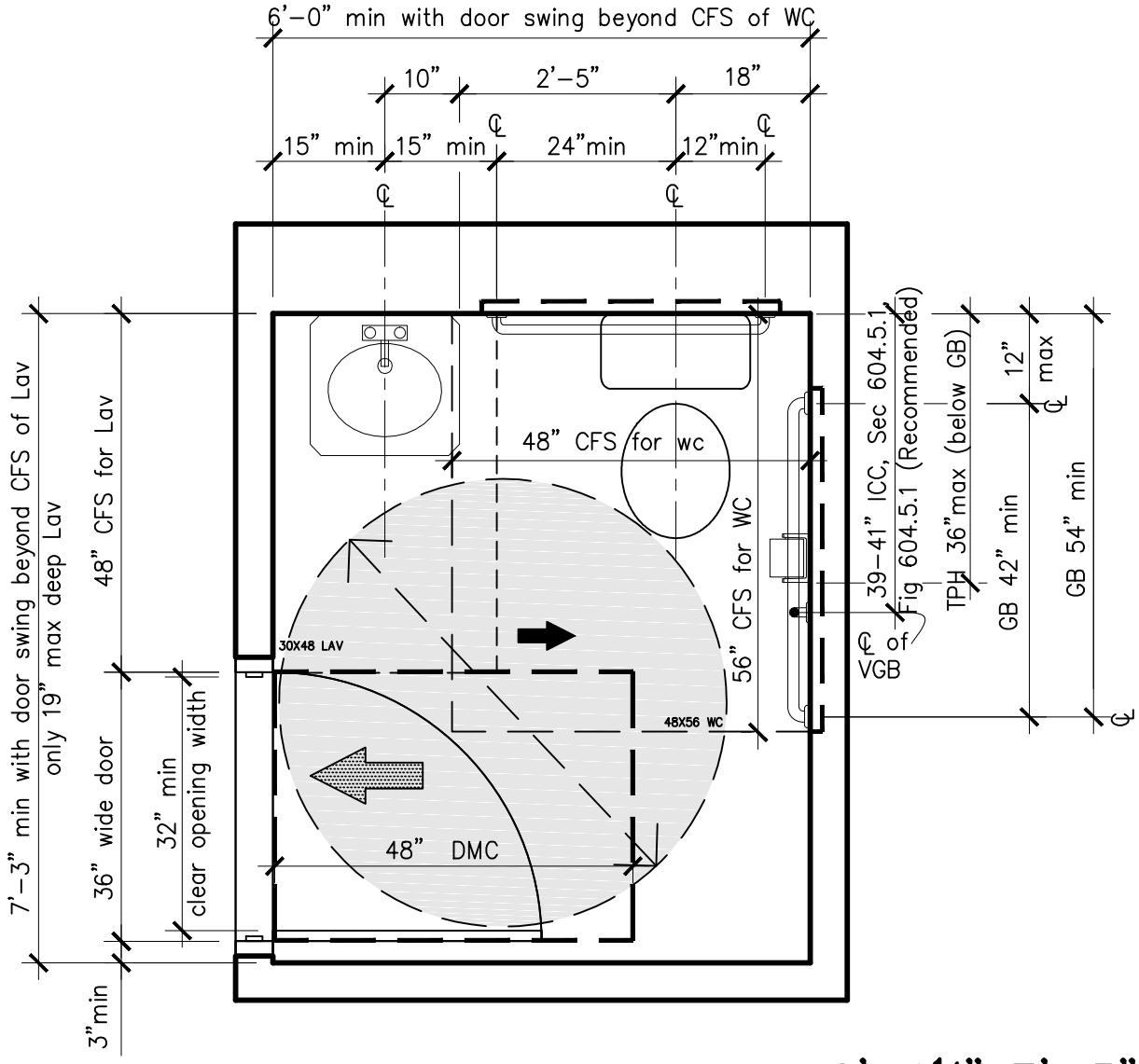

6'–1½"x7'–3"

- door maneuvering clearance is required both inside & outside of the bathroom

Min. Common/Public Single–User Toilet Room as per ANSI & UFAS with 60" Dia Turning Space; CFS of Lav & WC beyond In–Swing Door; Maneuvering Clearances at all Fixtures & Door (Side Door, Adjacent to Lav); & Grab Bar Locations

PT–11

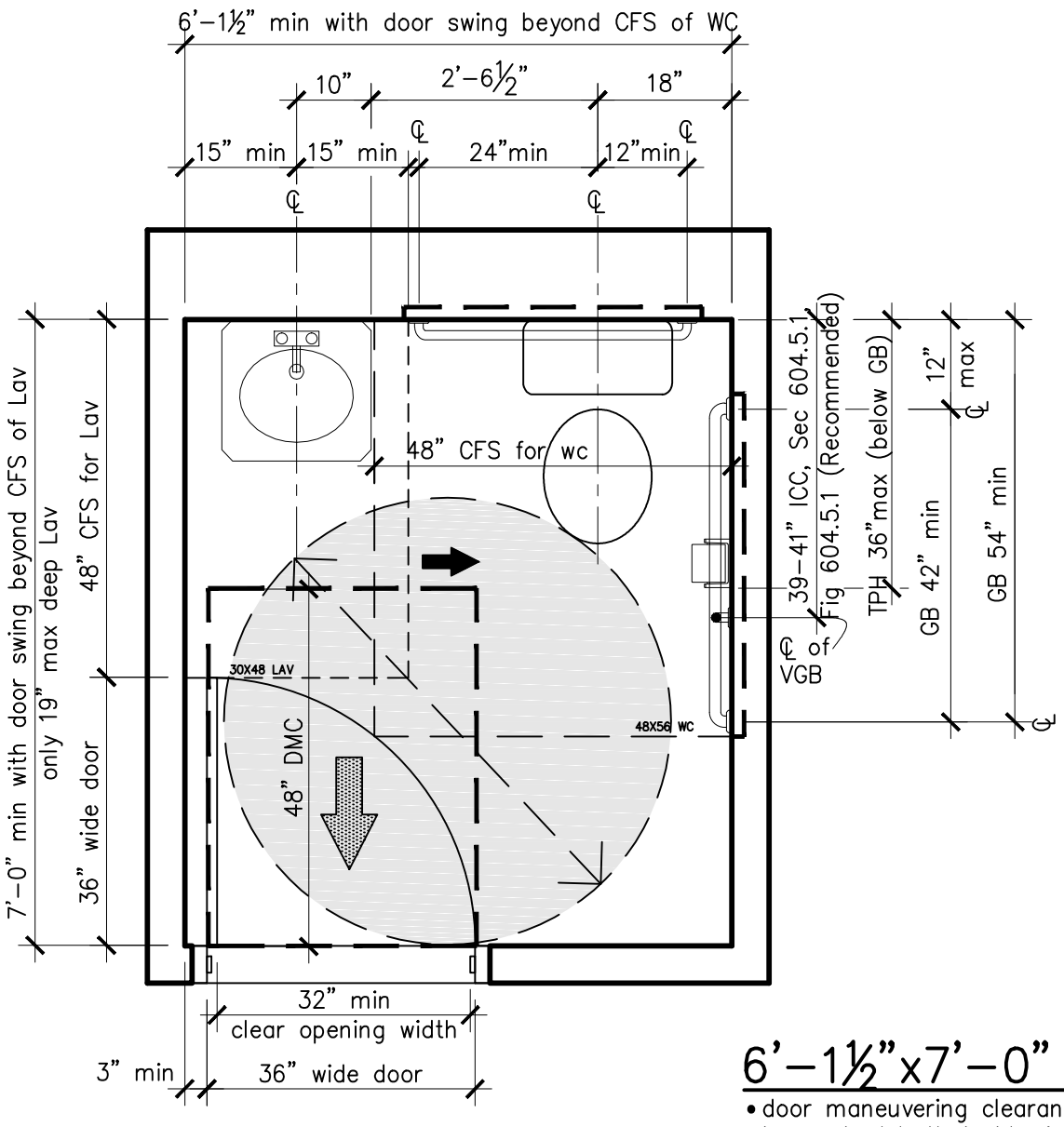

6'–1½"x7'–0"

- door maneuvering clearance is required both inside & outside of the bathroom

Min. Common/Public Single–User Toilet Room as per ANSI & UFAS with 60" Dia Turning Space; CFS of Lav & WC beyond In–Swing Door; Maneuvering Clearances at all Fixtures & Door (Front Door, Opposite to Lav); & Grab Bar Locations

PT–12

APPENDIX H:
Laying the Groundwork Design Guidelines

Laying the Groundwork

Design Guidelines for Retail and Other Ground-Floor Uses in Mixed-Use Affordable Housing Developments

A project of the Design Trust for Public Space in partnership with NYC Department of Housing Preservation and Development

NYC Department of Housing Preservation & Development

DESIGN TRUST FOR PUBLIC SPACE

“Good standards and guidelines for street level commercial uses do not change whether the project is market rate or affordable.”

Reese W. Fayde
REESE FAYDE & ASSOCIATES

Laying the Groundwork

Design Guidelines for Retail and Other Ground-Floor Uses in Mixed-Use Affordable Housing Developments

A project of the Design Trust for Public Space in partnership with NYC Department of Housing Preservation and Development

NYC Department of Housing Preservation & Development

DESIGN TRUST FOR PUBLIC SPACE

Design Trust for Public Space
designtrust.org

NYC Department of Housing Preservation and Development
nyc.gov/hpd

Laying the Groundwork Fellows

Fiona Cousins
ENGINEERING FELLOW

Penny Hardy
GRAPHIC DESIGN FELLOW

Hayes Slade
ARCHITECTURE FELLOW

James Slade
ARCHITECTURE FELLOW

Design Trust Staff

Susan Chin, FAIA, Hon. ASLA
EXECUTIVE DIRECTOR

Rosamond Fletcher
DIRECTOR OF PROGRAMS

Ozgur Gungor
COMMUNICATIONS MANAGER

Joseph Huennekens
PROGRAM ASSOCIATE

Kelly Mullaney
DEVELOPMENT MANAGER

Martha Snow
EXECUTIVE ASSISTANT AND
SPECIAL PROJECTS ASSOCIATE

NYC Department of Housing Preservation and Development Staff

Brian Baldor
DIRECTOR OF DESIGN CONSULTATIONS
AND STRATEGIES, BUILDING AND LAND
DEVELOPMENT SERVICES

Jonathan Beuttler
DIRECTOR OF MIXED-INCOME PROGRAMS,
NEW CONSTRUCTION FINANCE

Arielle Goldberg
SENIOR PLANNER AND POLICY ANALYST,
PLANNING AND PREDEVELOPMENT

Joanna Kandel
PROJECT MANAGER,
NEW CONSTRUCTION FINANCE

Greg Kelly
SENIOR BUSINESS ANALYST,
TECHNOLOGY AND STRATEGIC DEVELOPMENT

Authors
Fiona Cousins
Rosamond Fletcher
Joseph Huennekens
Hayes Slade
James Slade

Editors
Rosamond Fletcher
Joseph Huennekens

Publication Design
Penny Hardy,
PS New York

Drawings
Hayes Slade, James Slade,
Slade Architecture

© 2015 by the Design Trust for Public Space and NYC Department of Housing Preservation and Development.
All rights reserved. No portion of this publication can be reproduced without the prior permission of the Design Trust for Public Space.

ISBN 978-0-9968944-0-1

Printed and bound in New York
by Vanguard Printing

This publication was printed on recycled paper containing 10% postconsumer recycled fiber, reflecting the Design Trust's commitment to protecting our environment.

Contents

04 Preface
Design Trust for Public Space

05 Preface
NYC Department of Housing Preservation and Development

07 Introduction
08 Design Guidelines: Improving the Baseline, Inviting Innovation
09 Why Now?
10 How to Use the Guidelines
13 Critical Success Factors Checklist for Ground-Floor Retail and Community Use

14 SECTION 1 **Facade and Signage**
24 SECTION 2 **Exterior Access and Streetscape**
34 SECTION 3 **Interior Architecture**
42 SECTION 4 **Mechanical**
52 SECTION 5 **Electrical**
56 SECTION 6 **Plumbing and Fire Protection**

63 Applications
64 Design Guidelines for Small Retail Space
67 Design Guidelines for Large Retail Space
72 Sample Configurations of Ground-Floor Retail Tenants

80 Appendices
80 Tenant Lease Checklist
82 Glossary

85 Acknowledgments

Preface
Design Trust for Public Space

Mixed-use affordable housing developments have an important role to play in stabilizing and strengthening communities. When designed well, they provide high-quality residential units and flexible ground-floor space for a diverse range of retail and community tenants. Often, when designed with only the housing in mind, the ground-floor spaces remain vacant and blight the very neighborhoods the developments were intended to serve.

In 2014, the Design Trust for Public Space conducted an open request for proposals called *The Energetic City* to find projects that spoke to our commitment to develop public spaces that connect people and give life to the city. An independent jury selected a proposal by NYC Department of Housing Preservation and Development (HPD) to partner with the Design Trust in generating a set of design guidelines for ground-floor space in mixed-use affordable housing developments. The jury contended that the Design Trust was uniquely positioned to help HPD realize the immense opportunities mixed-use developments can bring to the public realm of neighborhoods across the five boroughs.

The Design Trust was founded in 1995 to unlock the potential of New York City's shared spaces. Today we are a nationally recognized incubator that transforms and evolves the city's landscape with city agencies and community collaborators. Our work can be seen, felt, and experienced throughout all five boroughs—from parks and plazas to streets and public government.

At the outset of the **Laying the Groundwork** project, our Fellows team identified several guiding principles—ground-floor space should be: flexible, distinctive, connected to the street and passersby, transparent, and continuous. Based on the feedback of a broad range of stakeholders and peer reviewers, these principles evolved into a set of nine 'critical success factors' and the detailed guidelines found herein.

Most importantly, these pioneering guidelines are the critical result of the Design Trust Fellows and the many individuals and organizations who contributed so much of their intelligence and effort. We truly appreciate HPD for presenting this significant opportunity and working thoughtfully and effectively with our Fellows as an integral part of the project team. We thank the National Endowment for the Arts, Design Trust Founder's Circle, and our donors for their generous support and dedication to our work.

Susan Chin

Susan Chin, FAIA, Hon. ASLA

EXECUTIVE DIRECTOR
DESIGN TRUST FOR PUBLIC SPACE

Preface
NYC Department of Housing Preservation and Development

Mixed-use projects play a critical role in supporting the City's goal to foster diverse, livable neighborhoods, a key tenet of Mayor Bill de Blasio's *Housing New York* plan. This type of development not only provides much-needed affordable housing to New Yorkers, but also provides an array of amenities and services to help improve the quality of life in our neighborhoods. This is especially true in communities that are underserved by retailers and service providers.

Several years ago, HPD initiated an effort to better understand the specific challenges faced by affordable housing developers when building mixed-use developments. We consulted a broad range of stakeholders, including developers, lenders, commercial brokers, property managers, and community organizations. From across these groups, we heard that poor physical design can be one of the most significant barriers to lease-up. When a building is not planned and constructed with quality design in mind, the pool of tenants willing and able to lease a space dwindles. This increases the chance for vacancies, and vacancies threaten the viability of our projects, detract from the quality of neighborhood street life, and waste an opportunity to increase local employment. These experts identified better design as a primary need, but were not in a position to suggest specific design principles that would help meet that need.

Collaborating with the Design Trust for Public Space on **Laying the Groundwork** has strengthened our expertise in the design of retail and community facility spaces in order to fill this crucial gap. The project has codified a set of guidelines that capture best practices for mixed-use projects. These guidelines will be used as a resource by our development and technical staff, and by other city agencies, developers, and community organizations that participate in our development and neighborhood planning initiatives.

This project would not have come to fruition without the hard work and vision of the Design Trust and its Fellows, the dedicated team at HPD, the workshop participants and peer reviewers, and the other City agencies who provided feedback on the **Laying the Groundwork** project. We are grateful for their creativity and attention to detail.

Vicki Been

Vicki Been
COMMISSIONER
NYC DEPARTMENT OF HOUSING PRESERVATION AND DEVELOPMENT

Introduction

Ground-floor space in affordable mixed-use housing is inextricably connected to the pedestrian experience of our city's largest public space, the sidewalk. A well-designed storefront and retail level, including community use, has the potential to provide much-needed services and amenities to local residents, while contributing significantly to the quality of a neighborhood's streetscape and economic vitality. Good retail design extends far beyond the attractiveness and immediacy of the built environment. Benefits include positive changes to the social, economic, and environmental health of our communities.

Design Guidelines: Improving the Baseline, Inviting Innovation

Good retail design is holistic and flexible to allow for a diversity of uses that may evolve over time. Key design concepts include:

Maximum spatial flexibility to facilitate a variety of tenant types and merchandising strategies

Retail presence that activates the streetscape and is differentiated from residential entrances

Mechanical, electrical, and plumbing (MEP) services that allow for individual tenants to control their own environment

MEP services with the capacity to foster a mix of retail uses

Plans that incorporate these factors can significantly improve the baseline of design in mixed-use affordable housing developments, contributing to greater marketability and improved rates for leasing retail space. In turn, the quality and diversity of retailers will improve, linking residents to local goods, services, and job opportunities. The increased continuity of commercial corridors will create lively, active streetscapes that invite people to gather in the public realm and promote community engagement. Although designing spaces to these guidelines may involve additional up-front costs, the benefits include:

Increased leasing opportunities

Increased rent potential

Improved quality of the leased space

Reduced need for modifications to the building envelope to accommodate retail tenants

These guidelines aim to advance the quality of mixed-use affordable housing developments. With this administration's focus on housing, each project's developer and architect has a tremendous opportunity to think creatively about how to capitalize on this initiative. Designers are invited to think more innovatively about how the scale of the new building will interplay with the scale of the neighborhood. How can the transparency and proportions of the storefront facade encourage interaction and activity among retail tenants and residents? How can a better streetscape attract people to the building's uses? How can greenscape improvements contribute to the community's health and resiliency?

An analysis by the **New Construction Finance** division of **NYC Department of Housing Preservation and Development** found that the cost of applying most of these guidelines was negligible, with the exception of ceiling height and MEP recommendations. A detailed COST ESTIMATE TOOL, developed by **Arup** for the **Design Trust for Public Space,** can be used to determine how the MEP guidelines may affect project budgets. http://www.designtrust.org/projects/groundwork/activities-and-outputs/.

Why Now?

Office of the Mayor, City of New York
HOUSING NEW YORK
http://www.nyc.gov/html/housing/assets/downloads/pdf/housing_plan.pdf

Mayor Bill de Blasio's **Housing New York: A Five-Borough, Ten-Year Housing Plan**—an initiative to create or preserve 200,000 units over the course of a decade—will reshape New York's urban fabric and offers an opportunity for the City and developers to create dynamic, well-designed ground-floor space in mixed-use affordable housing developments. The extensive plan calls for a holistic approach to community development that will support diverse, livable neighborhoods.

FISCAL YEAR 2015 HPD HOUSING STARTS BY BOROUGH

BOROUGH	NEW CONSTRUCTION	PRESERVATION	TOTAL
Manhattan	2,193	3,817	6,010
Bronx	2,360	2,621	4,981
Brooklyn	3,069	3,846	6,915
Queens	637	553	1,190
Staten Island	224	1,005	1,229
TOTAL	**8,483**	**11,842**	**20,325**

DATA: NYC DEPARTMENT OF HOUSING PRESEVATION AND DEVELOPMENT

The NYC Department of Housing Preservation and Development (HPD)—the largest municipal housing preservation and development agency in the nation, committed to strengthening neighborhoods while preserving the stability and affordability of New York City's housing stock—found that ground-floor space that is not thoughtfully designed to be attractive and accommodating to a wide variety of retail and community tenants may be difficult and undesirable to lease, resulting in underutilized or vacant storefronts in mixed-use developments. HPD asked a diverse group of development partners and stakeholders how to address this challenge and what would contribute to successful mixed-use affordable housing. High-quality design was one of the key factors contributing to effective retail outcomes, along with the perception of a strong commercial market and adequate demand for uses or services, and access to capital for retail and other ground-floor uses.

HPD approached the Design Trust for Public Space—a nonprofit dedicated to the future of public space in New York City—to develop design guidelines for ground-floor space as part of an agency-wide initiative to improve retail outcomes and create vibrant neighborhoods. The resulting **Laying the Groundwork** project and this publication aim to increase the flexibility of retail space, and consequently the diversity of ground-floor uses, to meet the needs of communities across the city as they evolve over time. These design guidelines have been developed at an opportune moment to play a critical role in the City's housing plan, informing criteria for requests for proposals (RFPs), the evaluation of development proposals, and the review of architectural plans.

How to Use the Guidelines

For additional information on incorporating the guidelines into specific projects consult the following **NYC Housing Preservation and Development** resources.

NYC DEPARTMENT OF HOUSING PRESERVATION AND DEVELOPMENT GUIDE TO BUILDING AND LAND DEVELOPMENT SERVICES (BLDS)
http://www1.nyc.gov/site/hpd/developers/guide-to-building-land-development-services.page

NYC DEPARTMENT OF HOUSING PRESERVATION AND DEVELOPMENT REQUEST FOR PROPOSALS (RFPS)
http://www1.nyc.gov/site/hpd/developers/rfp-rfq-rfo.page if applicable.

›

p 63 Applications

The Applications section provides a matrix overview of the guidelines by use-type, for both small and large retail space.

Who is this publication for?

Developers and design professionals working in the affordable housing industry may use this publication as a tool to achieve best practices in the design of retail and other ground-floor spaces in mixed-use developments. These guidelines are based on projects typical to HPD and the New York City context but are relevant to other cities as well. These best practices may also be useful for developers undertaking mixed-use market-rate housing.

What does it cover?

For the purpose of this publication, the term 'retail' refers to any ground-floor use that generates commercial activity or fills a community need and activates the streetscape. The guidelines address new construction projects only, focusing on physical elements—structure and systems—that are challenging or prohibitively expensive to modify after a building is constructed, such as floor and ceiling heights, glazing, entrance and egress points, loading docks, column spacing, and building system requirements.

What types of retail and community space are included?

To find the best mix of retail and community tenants for a specific neighborhood or development, market studies are ideal. Developers can also conduct preliminary community engagement to get input from residents, local businesses, and local nonprofits about what uses are needed and/or desired. HPD and the Design Trust project team identified the following uses as amenities or services that are frequently prioritized by local residents and stakeholders. The guidelines focus on an analysis of the specific design and MEP requirements for these uses.

Bank

Full-Service Pharmacy

Full-Service Restaurant

Grocery Store

Laundromat

Major Drugstore with Pharmacy

Supermarket

Community Use
- **Childcare/Pre-K Center**
- **Health Facility**
- **Cultural Space**

Some of these uses require more specific infrastructure and upfront investment in the build-out phase. The guidelines highlight the design needs for uses with significant up-front architectural and MEP demands, such as supermarkets, restaurants, and laundromats. For uses that also have specific design needs—community uses such as Childcare/Pre-K, Health Facilities, and Cultural Spaces—developers may integrate their specific requirements into the planning phases. Developers should work with a proposed tenant/partner from the earliest stages of the process in order to ensure the resulting space serves the needs of the organization or institution and meets local building requirements.

What is 'Base Retail Space'?

While this project does not feature every type of retail, the Base Retail Space, with two size distinctions, has been developed with a diverse set of uses and flexibility in mind. Please refer to Design Guidelines for Small and Large Retail Space on page 63.

›

p 63 Applications

The **Design Guidelines for Small and Large Retail Space** matrices shows how the Base Retail Space accommodates a broad set of uses.

Base Retail Space – Small < 4,000 square feet

Base Retail Space – Large ≥ 4,000 square feet

The following detailed guidelines outline the architectural and service needs for a flexible combined Base Retail Space of approximately 12,000 square feet, which can be used as one large space or a mix of smaller and medium-size retail spaces, with an average minimum size of 2,000 square feet. Minimum-size spaces are referred to as a "bay," corresponding to the column grid. The size of uses depicted in the Applications section can be inferred by the number of bays required (one or more). Developer/landlord provision of mechanical, electrical, plumbing, and fire protection services has been included in the Base Retail Space to improve the leasability of retail spaces. Examples of potential use configurations, how different retail tenants can be accommodated and the resultant design and service needs, are provided in the Applications section of the guidelines.

›

p 80–81 Appendices

The **Tenant Lease Checklist** provides an itemized list of standards that can be incorporated into tenant leases.

How are the guidelines organized?

The following six sections of this publication are organized around key components of ground-floor design—**Facade and Signage**, **Exterior Access and Streetscape**, **Interior Architecture**, **Mechanical**, **Electrical**, and **Plumbing and Fire Protection**. Each section outlines the key objectives, the elements that contribute to effective, high-quality design, and related references to consider exploring further. These sections are followed by the Applications section, which provides a matrix overview of the design guidelines by use and a diagrammatic overview of potential use configurations. Two appendices provide a Tenant Lease Checklist and Glossary.

A detailed tool, developed by **Arup** for the **Design Trust for Public Space**, can be used to determine how the MEP guidelines may impact project budgets.

COST ESTIMATE TOOL
http://www.designtrust.org/projects/groundwork/activities-and-outputs/

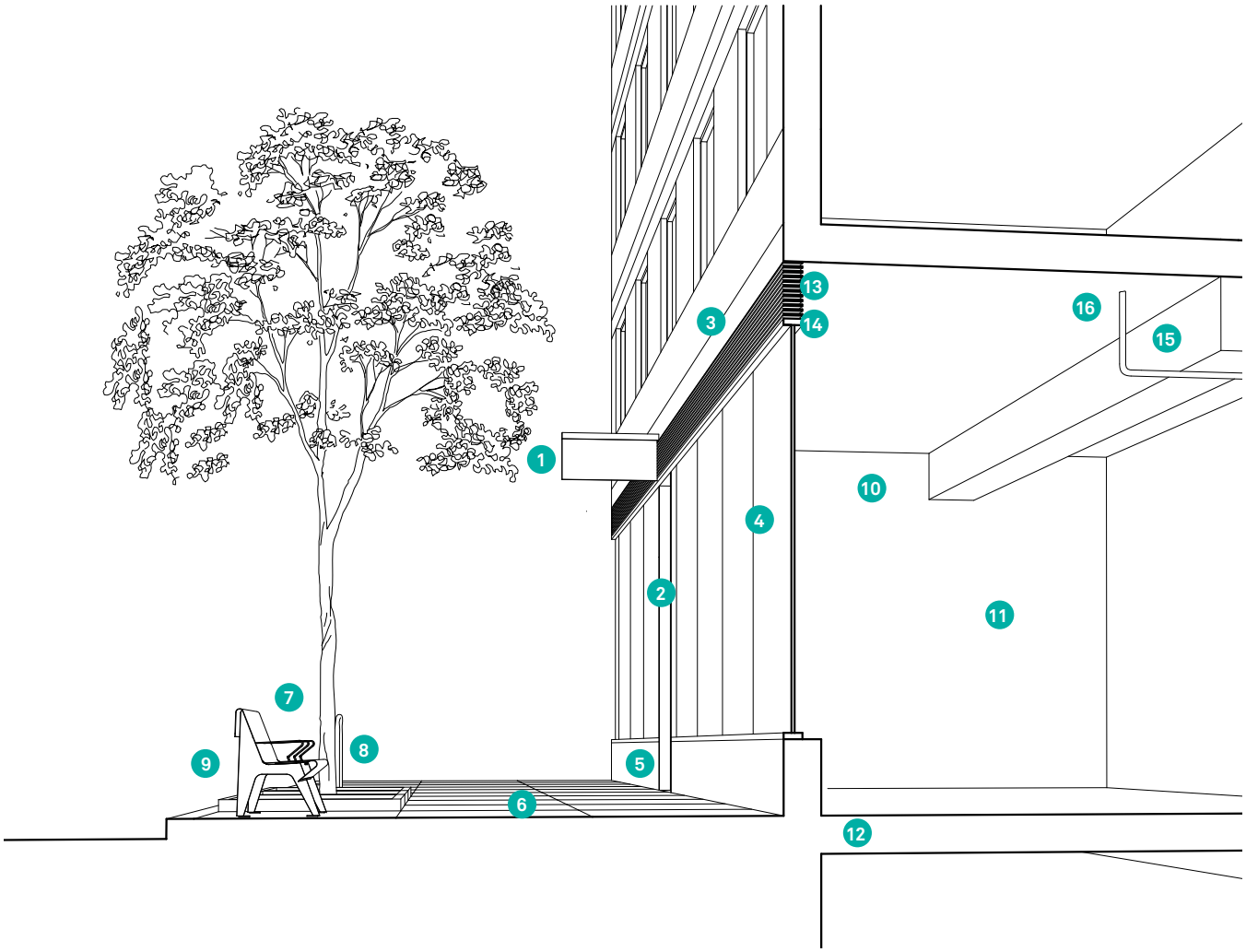

SECTION PERSPECTIVE OF SUCCESSFUL GROUND-FLOOR SPACE

1 | Blade Signage
2 | Entry Integrated with Storefront System
3 | Flush Louvers
4 | Maximum Transparency
5 | On-Grade Entry
6 | Clear Pedestrian Path
7 | Adequate Tree-Pits
8 | Bike Racks
9 | Benches
10 | Adequate Floor-to-Floor Height
11 | Deep and Wide Bay
12 | Floor Slab Coordinated to Grade
13 | Louvers 10' Above Sidewalk
14 | Independent Ventilation
15 | Fire Alarm System
16 | Wet Sprinkler System

Critical Success Factors Checklist for Ground-Floor Retail and Community Use

FACTOR 1 Maximum facade transparency with measures in place for attractive privacy solutions

FACTOR 2 Well-defined retail presence, separate from residential entry

FACTOR 3 Organized and distinct retail signage

FACTOR 4 Exterior lighting that promotes activity and security

FACTOR 5 On-grade entrances, and potential for future on-grade entrances, to each retail space

FACTOR 6 Inclusion and maintenance of peripheral amenities such as benches and bike racks to support a variety of retail tenants, including small-scale, local merchants

FACTOR 7 Adequate height clearances to facilitate a variety of tenant build-outs and maximize utility of leasable retail space

FACTOR 8 Organized, convenient column grid spacing for the greatest flexibility across retail program types and tenant merchandising

FACTOR 9 Sufficient, individually metered utilities and MEP service to support a variety of retail tenants—appropriately supplemented as required for priority tenant types (restaurants, grocery stores, etc.)

SECTION 1 ELEMENTS

1.1 | Glazing / Fenestration
1.2 | Entrances
1.3 | Louvers
1.4 | Signage
1.5 | Awnings
1.6 | Exterior Lighting
1.7 | Security Gates

SECTION 1

Facade and Signage

OBJECTIVES

A well-designed ground-floor facade contributes to an active street life by engaging passersby and connecting interiors to the street. Facades that clearly and distinctly define retail and residential uses attract customers from many locations on the block and beyond.

Ensuring high visibility into and out of retail spaces promotes safety. A transparent storefront welcomes customers inside with products and services on display, discourages crime with more of what urban theorist Jane Jacobs called “eyes on the street,” reduces energy consumption by letting in natural light, and enhances the curb appeal and value of the store and the entire neighborhood.

ELEMENTS

1.1 Glazing/Fenestration

Making the facade as transparent as possible allows for a two-way visual exchange between the exterior and interior. Occupants in the retail space see what is happening on the street and pedestrians outside see the activity and offerings in the retail spaces. This symbiotic relationship benefits both patrons and retailers.

›

p 80-81 Appendices

When privacy is needed for specific uses, refer to the PRIVACY STRATEGY DIAGRAM in the TENANT LEASE CHECKLIST.

.1 Provide continuous ground-to-ceiling glazing, with integral doors. Where ground-to-ceiling glazing is not possible, meet a target of 70% transparency between 2 feet and 10 feet above the sidewalk.

.2 Coordinate glazing zones with the building's structure, louvers, and other base elements.

.3 Design glazing to meet NYC code regulations as well as any State and Federal rules that apply. For projects located within Federal Emergency Management Agency (FEMA) flood zones, alternative approaches should be considered to maximize transparency while following building regulations.

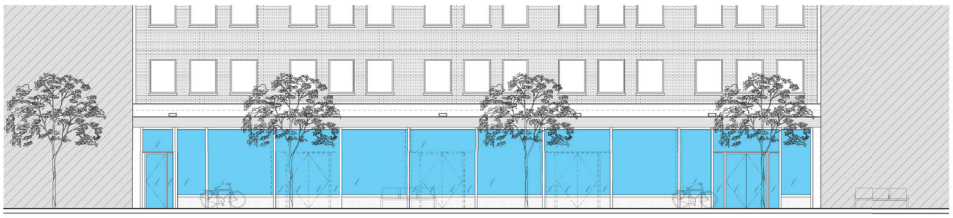

MINIMUM 70% CLEAR GLAZING BETWEEN 2 AND 10 FEET

CASE STUDY

CRITICAL SUCCESS FACTOR 1 MAXIMUM FACADE TRANSPARENCY

DANA WALL

501 W. 51ST STREET

501 W. 51st Street provides 31 affordable units to long-term residents of New York's Clinton/Hell's Kitchen neighborhood. The project comprises two parts: a historic renovation and a new addition. The six-story building includes two small retail spaces, each occupied by a local business. The commercial spaces are glazed to the maximum extent allowed by the historic structure. To achieve transparency, the facade features two sets of windows above a 2-foot baseboard. The first set of windows is aligned with the top of the doorway. The second set of glazing is inserted between the door and cornice. Signage pasted onto the windows, while not ideal, is minimal and discreet. The result is two cheerful and modern retail spaces that blend old and new.

DEVELOPER
Clinton Housing Development Company (CHDC)

DESIGN ARCHITECT
Edelman, Sultan, Knox, Wood / Architects

LOCATION
New York, NY

1.2 Entrances

A continuous retail storefront enlivens the street. Retail and residential entrances that are distinct and clearly marked facilitate wayfinding. Good retail spaces are designed to be flexible so they can be conveniently subdivided when necessary; this requires a design that can accommodate multiple direct entries to the subdivided spaces. Internal vestibules can offer an efficient way of providing a single point of entry for two or more tenants and help maintain thermal separation between interior and exterior spaces.

.1 Plan for flexibility in the subdivision of the retail space when designing the facade.

.2 Integrate entrances in the storefront system and maximize transparency into the retail interior.

.3 Provide fully accessible entrances and comply with all current applicable code requirements.

.4 Maximize potential entry locations by coordinating with the grade of the site. This will increase the flexibility of the retail space for subdivision as well as for egress requirements. See Element 2.1 On-Grade Entry.

.5 Where entry vestibules are required by code or for energy conservation, design them to maintain maximum transparency into the retail interior.

.6 Consider the protection and utility of entrances for street deliveries.

Center for Active Design
ACTIVE DESIGN GUIDELINES: PROMOTING PHYSICAL ACTIVITY AND HEALTH IN DESIGN
http://centerforactivedesign.org/dl/guidelines.pdf

›

p 73–75 Applications

For further information on separate service entrances refer to TENANT DIAGRAM 1: SUPERMARKET.

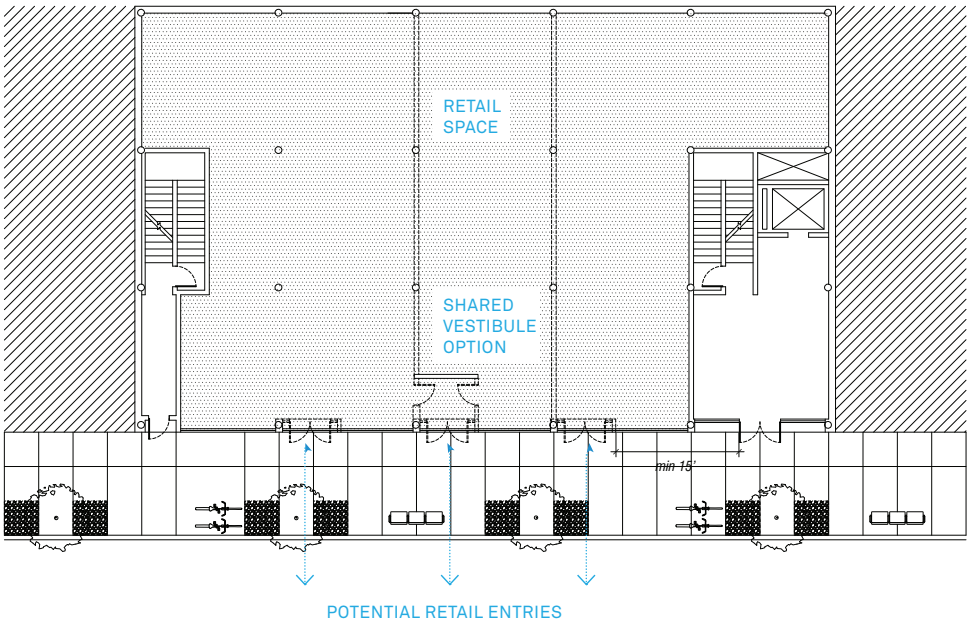

.7 Separate and differentiate retail entries from residential entrances in location as well as articulation so that there is a clear distinction between them. Maintain a minimum of 15 feet between the residential entrance and the closest retail entrance location.

.8 Provide separate service entry for retail spaces over 6,000 square feet. Locate as far as possible from residential and retail entries. Ideally the service entry is located near the garbage collection location to minimize congestion on the sidewalk.

.9 On corner lots, locate the residential entry on the side street and locate retail entries on the main street.

CASE STUDY

CRITICAL SUCCESS FACTOR 2 SEPARATE ENTRANCES

ART GRAY PHOTOGRAPHY FOR PATRICK TIGHE ARCHITECTURE

DEVELOPER
West Hollywood Community Housing Corporation (WHCHC)

DESIGN ARCHITECT
Tighe Architecture

LOCATION
West Hollywood, CA

SIERRA BONITA

Sierra Bonita provides 41 affordable housing units in a five-story building easily distinguished by its unique solar panels and bold mesh window screens. The ground-floor of Sierra Bonita houses retail space, social service offices, and the nonprofit developer's main office. The residential entry for Sierra Bonita is located on the west side of the building in order to maximize retail frontage. This preserves the entirety of the building's frontage for commercial uses and prevents tenants from having to enter and exit their home along a heavily trafficked corridor. The separation of the entrances distinguishes the two components of the building and enhances the experience of both commercial and residential tenants.

1.3 Louvers

In most cases, the interior heating, ventilation, and air-conditioning (HVAC) requirements within the retail space necessitate street facade louvers. Well-planned placement of louvers enhances the facade and the quality of the retail storefront.

.1 Provide a clear zone for louvers on the exterior storefront. This typically runs continuously along the facade above the storefront-glazing band.

.2 Finish louvers to match the color of the surrounding storefront elements so that they are an integral part of the facade design.

.3 Size the louvers according to the heating and cooling system that is being used. If a remote condenser (located outside of the retail space) is used, the dimension of the exterior louver can be 1 foot tall as it will only be used for fresh air/make-up air. If a ducted condenser unit is going to be required within the retail space, the louvers will need to be a minimum of 18 inches tall. Please refer to Sections 4–6 (Mechanical, Electrical, and Plumbing and Fire Protection).

.4 Do not install air-conditioning units over doorways or allow them to protrude through the facade.

.5 Provide insulated panels behind louvers that can be removed if the louver is needed.

1.4 Signage

Retailers draw customers from different directions, vantage points, and distances. Signage that projects from the facade perpendicularly can attract pedestrians or drivers who are looking obliquely at the facade from a distance. Facades with organized, adequate, and legible signage contribute to an attractive street front.

NYC Department of Small Business Services
FACADE GUIDE TO STOREFRONT DESIGN
http://www.nyc.gov/html/sbs/downloads/pdf/neighborhood_development/sbs_documents/sbs_updated%20facade_guide.pdf

.1 Consider the context, traffic patterns, sidewalk widths, and any governing rules, regulations, and codes when choosing signage placement. Zoning and building code requirements in NYC limit location, type, and size of signage. Zoning regulations are specific to the zoning district. Signage may require a separate permit depending on size and zoning regulations.

.2 Include provisions for signage in the design of the retail facade. Signage should be uniform across the length of the street front facade, creating a signage band above the storefront.

.3 Use blade signage to supplement the signage band. Signage that is placed perpendicular to the facade enhances visibility from a distance down the street.

.4 Coordinate signage lighting with the facade design. The design should prevent light pollution above the sign, and should particularly avoid illuminating the residential interiors. See Element 1.6 Exterior Lighting. Illuminated signage may not be permitted in certain zoning districts.

CASE STUDY

DANA WALL

CRITICAL SUCCESS FACTOR 3 ORGANIZED AND DISTINCT SIGNAGE

CHELSEA PARK

Chelsea Park, a mixed-income building in Manhattan, features 41 affordable units. 31,000 square feet of retail space wrap around the 12-story LEED-Silver building. This large retail area is subdivided into smaller spaces occupied by a mix of local and national commercial tenants. Retail signage at Chelsea Park maintains common standards but allows retailers to distinguish their establishments. Overhead signs advertise tenants and blade signs project from the facade. These highly visible signs entice customers walking up and down the street. Chelsea Park's signage creates an attractive pedestrian experience and differentiates between diverse retail types without appearing cluttered.

DEVELOPER
The Heller Organization

DESIGN ARCHITECT
GF55 Partners

LOCATION
New York, NY

1.5 Awnings

NYC Department of Transportation
STREET DESIGN MANUAL
http://www.nyc.gov/html/dot/html/pedestrians/streetdesignmanual.shtml#download

Well-designed awnings provide signage and protection from inclement weather. They can also shade the retail space from direct sunlight, reducing energy costs. Awnings are used by retailers to identify and differentiate their businesses. They are often a tenant fit-out item. If awnings are anticipated, provisions should be made to regulate their appearance, provide structural support, and ensure proper maintenance.

.1 Consider the width of the sidewalk or public way and any governing rules, regulations, and codes when designing awnings. Zoning rules in NYC limit the location, size, and signage of awnings. Regulations are specific to the zoning district.

.2 Maintain a uniform profile, projection, height, color, and material palette across the entire facade. Coordinate awning size/spacing with facade bays and with all retail tenant awnings. Branding for each retailer can be customized within these unifying standards.

.3 Specify open ends and bottoms on all awnings in order to maintain a clean and light appearance. Front lips are recommended, but should not exceed 1 foot in depth.

.4 Specify stainless steel supports and fasteners to prevent rusting. Awning support should be considered in the structural design of the building and facade.

.5 Clearly define responsibility for and maintenance of awnings in the lease agreement. Poorly maintained awnings can make a street front look unkempt and unattractive. See Tenant Lease Checklist on page 80–81.

.6 Integrate provisions for the support of retractable awnings into the design of the base building. Retractable awnings are often installed by restaurant tenants over sidewalk dining areas and can be deployed when weather is appropriate for outdoor dining.

1.6 Exterior Lighting

Storefront lighting helps maintain a friendly and safe environment, and increases the physical safety of retail and residential entrances. It is a proven crime deterrent. Exterior illumination provides light on the sidewalk and highlights the facade at night. Exterior lighting can also be used to accent trees and planting.

CASE STUDY

CRITICAL SUCCESS FACTOR 4 EXTERIOR LIGHTING FOR ACTIVITY AND SECURITY

JIM SIMMONS PHOTOGRAPHY FOR KILLEFER FLAMMANG ARCHITECTS

NEW GENESIS

New Genesis provides 106 efficiency apartments for low-income and formerly homeless individuals. The ground-floor of the six-story building features two retail establishments, a generously sized community room, and an interior courtyard. Given the project's at-risk population and downtown location, lighting is especially important at New Genesis. The design of the building takes care to provide adequate illumination of retail spaces without disturbing residents living on the second to sixth floors. The building features sconce lights along the ground-floor facade and pendant lights that hang from steel awnings atop the residential and commercial entrances. These downward-facing overhead lights illuminate pedestrian spaces but avoid unnecessary light pollution. Exterior lighting at New Genesis addresses security concerns and integrates the building into the vibrant surrounding neighborhood.

DEVELOPER
Skid Row Housing Trust

DESIGN ARCHITECT
Killefer Flammang Architects

LOCATION
Los Angeles, CA

Illuminating Engineering Society
LIGHTING FOR EXTERIOR ENVIRONMENTS
http://www.ies.org/store/product/recommended-practice-for-the-economic-analysis-of-lighting-1360.cfm

International Dark-Sky Association
DARK SKY APPROVED LIGHTING
http://darksky.org/fsa/dark-sky-friendly-devices/

Exterior building lighting is necessary if street lighting is insufficient or inadequately placed. Minimum lighting requirements from the NYC Department of Transportation (DOT) Street Design Manual call for average illuminance of 5 foot-candles and illuminance uniformity of 4:1.

.1 Coordinate placement of interior lighting with security gates or other obstructions to ensure lighting is effectively illuminating the exterior.

.2 Direct exterior lights downward to avoid illuminating residential windows. Consider specifying full cutoff fixtures to minimize light pollution.

.3 Coordinate exterior lighting with ground-floor and residential glazing.

.4 Ensure that lighting is energy efficient and meets Energy Star and energy code requirements.

1.7 Security Gates

The need for after-hours security must be balanced with maintaining an inviting visual connection to the street. An active, well-illuminated street frontage improves safety for retailers, residents, and the neighborhood. It also reduces the need for security gates by creating a safer street front. Ideally, security gates should not be allowed in retail spaces under lease agreements. There are many other mechanisms for providing security, including security systems with video, sensors, alarms, etc.

.1 If security gates are required, provide internally housed roll-down security grilles mounted on the interior of the storefront. These gates roll down inside of the display window and door.

.2 Specify that all security grilles must be of the open mesh variety in order to maintain transparency. Solid sections may be provided if they align with opaque portions of the facade. The minimum transparency allowed is 70% within 2 and 10 feet above the sidewalk.

.3 Prevent security grilles from obscuring or detracting from the design and details of the existing storefront. Integrate all security gates or grilles with the design and construction of a new storefront.

.4 Coordinate the location of security grilles so they do not interfere with exterior louvers.

SECTION 2 ELEMENTS

2.1 | On-Grade Entry
2.2 | Clear Pedestrian Path
2.3 | Recycling and Trash Disposal Area
2.4 | Loading and Curb Cuts
2.5 | Parking
2.6 | Planting
2.7 | Stormwater Capture
2.8 | Bike Racks
2.9 | Benches
2.10 | Exterior Power
2.11 | Open Store Frontage

SECTION 2

Exterior Access and Streetscape

OBJECTIVES

The streetscape fosters social interaction and facilitates pedestrian engagement with ground-floor retail spaces, enhancing the local environment. Streetscape amenities should maintain unimpeded flow for pedestrians and goods, aim for environmental sustainability, and enrich the sidewalk experience for pedestrians and residents.

It is advantageous for everyone involved (landlord, commercial and residential tenants, pedestrian, and patron) to create an attractive and engaging street experience. Well-designed sidewalks provide opportunities for a variety of pedestrian activities at various speeds: shopping, leisurely strolls, stopping for conversations, sitting, etc.

ELEMENTS

2.1 On-Grade Entry

Providing the potential for on-grade pedestrian entries allows for flexibility if the space is subdivided in the future. Aligning sidewalk levels and doorways allows for multiple future on-grade entrances.

NYC Department of Transportation
STREET DESIGN MANUAL
http://www.nyc.gov/html/dot/html/pedestrians/streetdesignmanual.shtml

.1 Set the retail floor slab at the lowest possible access point for the overall project area. Setting the slab at a higher point will preclude additional subdivisions in the future without ramps or mechanical solutions to negotiate the grade change.

.2 Create additional entry points by infilling up to the street level.

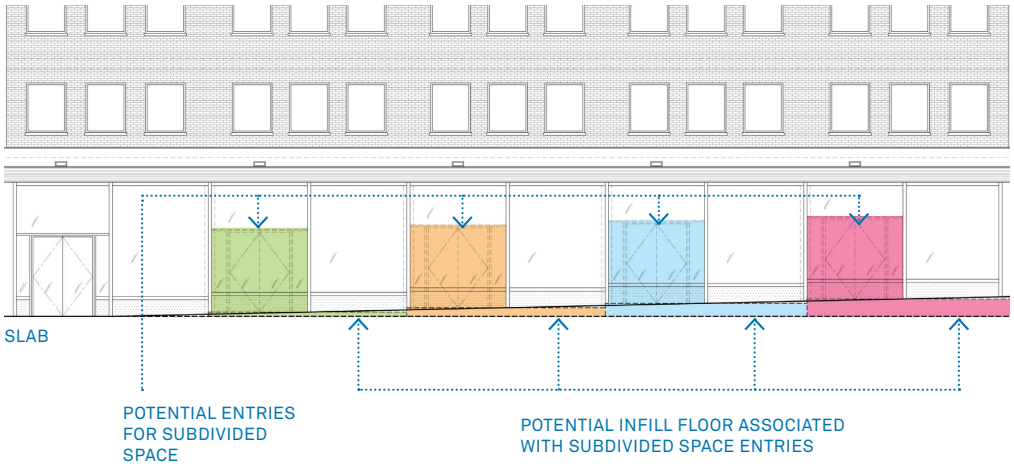

CASE STUDY

CRITICAL SUCCESS FACTOR 5 ON-GRADE ENTRY

MERRITT CROSSING

Merritt Crossing provides 70 affordable one- and two-bedroom apartments to low-income seniors in Oakland, California. The first floor of the LEED-Platinum building is devoted entirely to community space and social service offices. Merritt Crossing navigates a grade change along its east facade yet still incorporates multiple on-grade entrances. To achieve this, the slab is constructed at the lowest point of the building with office and residential entrances at different heights. Placing the slab at the lowest level leaves room for additional on-grade entrances and provides flexibility if additional subdivision of the ground floor is required.

DEVELOPER
Satellite Affordable Housing Associates (SAHA)

DESIGN ARCHITECT
Leddy Maytum Stacy Architects

LOCATION
Oakland, CA

LEDDY MAYTUM STACEY ARCHITECTS

2.2 Clear Pedestrian Path

A wide and clear pedestrian path makes room for residents, shoppers, and passersby. It also enhances the accessibility of retail spaces and may increase foot traffic.

.1 Provide a clear 8-to10-foot path for travel parallel to the facade. The width can be reduced to 6 feet at tree pits or bioswales of no more than 10 feet in length.

2.3 Recycling and Trash Disposal Area

Retailers require convenient recycling and trash disposal. These areas must be easily accessible to the sanitation department for pickup and should be located out of the view and travel path of residents and pedestrians.

.1 Locate recycling bins and trash collection areas out of view from the sidewalk and main building entrances.

.2 Allow retailers to securely store at least three days' worth of garbage within the interior or a designated off-street location. If a loading dock is provided, this area could be adjacent to the dock. Make sure the garbage area is big enough to house the proper number of garbage receptacles with secure lids.

.3 Designate a pick-up area that is remote from the residential entry. If there is a separate service door, locate trash collection directly outside of this entrance, rather than down the street, which would require transporting refuse down the sidewalk.

2.4 Loading and Curb Cuts

A well-designed loading area takes into consideration pedestrian and resident flow in order to allow for unimpeded sidewalk passage and access to the building. Coordinate with NYC Department of Transportation (DOT) to provide necessary street parking restrictions as well as approvals for a loading dock, if appropriate.

Larger retail spaces may require a loading dock to maximize their marketability. In the absence of a loading dock, a secure area for a receiving entrance should be included for back-of-house deliveries.

.1 Provide a convenient loading area for retail tenants. In the event that a permanently designated loading dock location is not possible, ensure that street parking regulations allow for loading and unloading on a regular schedule convenient for retailers.

.2 Coordinate curb cuts with loading areas and with DOT requirements. Obtain permit for curb cuts and loading docks from NYC Department of Buildings (DOB).

.3 Accommodate a minimum 8-foot-6-inch wide truck width in all loading docks. Provide doors with 8 to 10 feet of clearance in height, along with a designated service area for waste receptacles.

.4 Locate loading docks on side streets when a lot has two corners. Do not locate loading docks on the same street as the residential entry.

2.5 Parking

Parking needs are highly dependent on the location of the development. In dense urban locations where mass transit is available, a parking lot for retail at the front of the building is unnecessary. It is also not desirable, as it impedes sightlines and access to retail frontage. For these locations, limited curbside parking with a frequent turnover (1 hour metered limits) is ideal to increase retail turnover. In less dense, more suburban locations, parking is expected and sought out by potential patrons.

.1 If parking is provided, ensure well-lit, secure lot locations that are visible from the sidewalk and the main street.

.2 Consider providing sub-grade parking. This is crucial for large, destination retailers. Access ramps to sub-grade parking should be located to avoid disrupting continuous street-level retail frontage and pedestrian flow.

2.6 Planting

Trees and plantings improve the street experience for pedestrians, residents, and retailers. They also provide environmental benefits, including aiding stormwater drainage, cleaning the air, and offering shade. Design the location of plantings to maintain unimpeded pedestrian flow, clear access to entrances, and best practices for plant health.

.1 Plan tree pits and plantings in accordance with the current DOT street design guidelines and NYC Department of Parks and Recreation requirements.

.2 Provide a subsurface trench filled with soil and covered with pervious pavement in the areas immediately adjacent to tree pits. For example, refer to Hudson Square Standard (diagram on page 31). This is critical to maintaining the tree root system and protecting the investment in the planting for the long term. Note that any permeable pavement will require a Sidewalk, Curb, and Roadway Application (SCARA) application and maintenance agreement prior to approval.

.3 Follow DOT requirements for all barriers around tree pits and allow for water flow. Avoid solid surrounding curbs or raised beds.

.4 Provide plantings and tree pits in compliance with more rigorous requirements for stormwater capture when locating a project within a NYC Department of Environmental Protection (DEP) Priority Tributary Area. Refer to DEP Priority CSO (Combined Sewer Overflow) Tributary Area Map as well as DOT Street Design Manual for stormwater capture installations.

.5 Provide a freeze-proof, tamper-proof water spigot on the exterior for cleaning the sidewalk and watering trees and plants.

Hudson Square Business Improvement District
HUDSON SQUARE IS PLANTING TREES: THE HUDSON SQUARE STANDARD
http://www.hudsonsquarebid.org/wordpress/wp-content/uploads/2014/04/hudson-squarestandard_interactive.pdf

NYC Department of Environmental Protection
PRIORITY CSO TRIBUTARY AREA MAP
http://www.nyc.gov/html/dep/pdf/green_infrastructure/green_infrastructure_combined_sewer_reference_map.pdf

2.7 Stormwater Capture

NYC Department of Environmental Protection
GUIDELINES FOR THE DESIGN AND CONSTRUCTION OF STORMWATER MANAGEMENT SYSTEMS

http://www.nyc.gov/html/dep/pdf/green_infrastructure/stormwater_guidelines_2012_final.pdf

NYC Department of Environmental Protection
STANDARDS FOR GREEN INFRASTRUCTURE

http://www.nyc.gov/html/dep/pdf/green_infrastructure/bioswales-standard-designs.pdf

Stormwater runoff poses harm to the health and long-term sustainability of New York City's waterways. Most of New York City relies on a combined sewer system, in which sewage and stormwater share the same pipe. During storm events, excess stormwater overwhelms the system and excess stormwater and untreated sewage discharges directly from outfalls into waterways. When building within a DEP Priority Tributary Area, designs must include measures to capture runoff by introducing stormwater detention and retention infrastructure and permeable areas. Refer to DEP Priority CSO Tributary Area Map. These requirements will typically be satisfied by a bioswale or purpose-designed water catchment area.

.1 Provide planting and trees in stormwater capture areas and/or bioswales when they are located on the main thoroughfare frontage. Refer to DOT Street Design Manual for stormwater capture installations. For siting and design refer to DEP Office of Green Infrastructure "Standards for Green Infrastructure" and DEP "Guidelines for the Design and Construction of Stormwater Management Systems."

CASE STUDY

CRITICAL SUCCESS FACTOR 6 INCLUSION AND MAINTENANCE OF PERIPHERAL AMENITIES

DANA WALL

AVA AND AVALON WEST CHELSEA

AVA and its adjacent sister property Avalon West Chelsea are mixed-income developments that feature 142 affordable housing units. The LEED-Silver buildings house 40,000 square feet of retail beneath a 14-story and 30-story residential tower. AVA and Avalon West Chelsea have an array of streetscape amenities that improve the pedestrian experience. Building management installed specialty bike racks that align with the look of the adjacent residential entrance. Extra-large street-tree pits along both street faces shade residents and passersby. The clean and well-maintained streetscape at AVA and Avalon West Chelsea improves the marketability of retail spaces and visually unifies the two buildings. It also integrates the project into the surrounding community and enhances the public realm.

DEVELOPER
Avalon Bay Communities

DESIGN ARCHITECT
Fogarty Finger

LOCATION
New York, NY

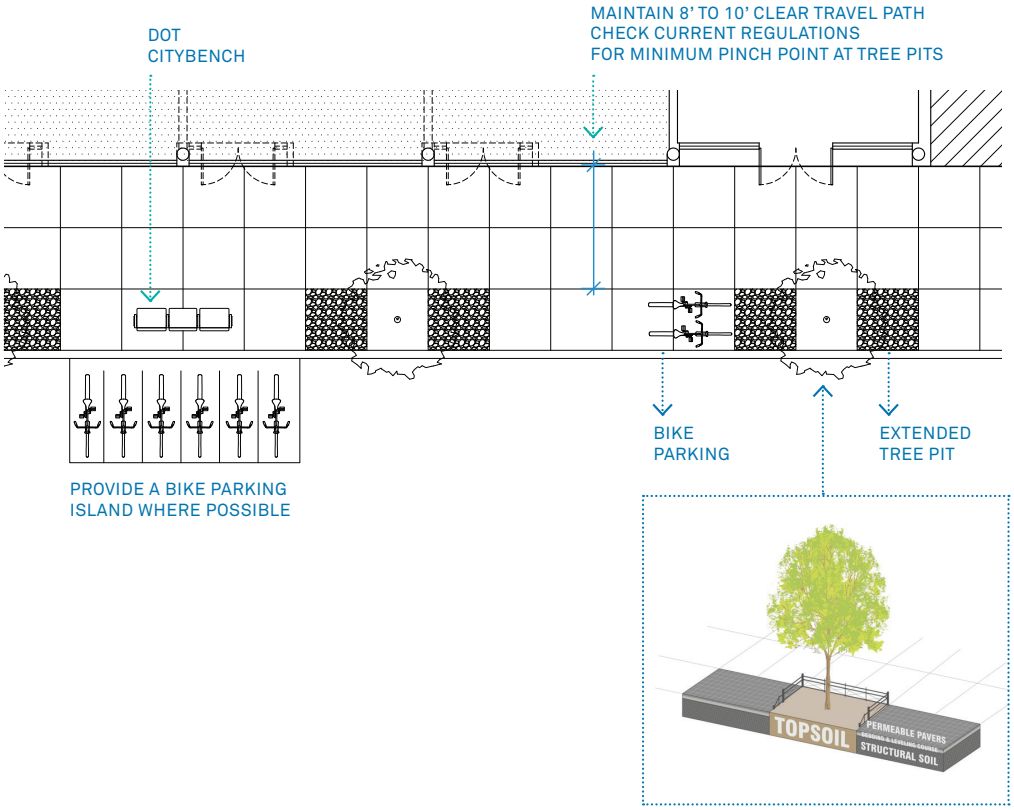

HUDSON SQUARE BID

2.8 Bike Racks

Increasing connectivity and supporting multimodal transportation options is vital to enhancing the attractiveness of retail locations. Improved access increases resident mobility, retailer traffic, and potential rental rates. Biking reduces air pollution and encourages physical activity, promoting health within the community.

.1 Provide bike racks and/or bike share facilities in an area convenient to retail locations.

.2 Locate bike rack/bike share in a secured area with good visibility and lighting.

.3 Work with DOT to install bike corrals where a car parking space might otherwise be located as an alternative to bike racks on the sidewalk.

.4 Refer to zoning ordinances for minimum bike parking requirements.

Center for Active Design

ACTIVE DESIGN GUIDELINES: PROMOTING PHYSICAL ACTIVITY AND HEALTH IN DESIGN

http://centerforactivedesign.org/dl/guidelines.pdf

NYC Department of City Planning

ACTIVE DESIGN: SHAPING THE SIDEWALK EXPERIENCE

http://www.nyc.gov/html/dcp/pdf/sidewalk_experience/active_design.pdf

NYC Department of City Planning

ACTIVE DESIGN: SHAPING THE SIDEWALK EXPERIENCE SUPPLEMENT

http://www.nyc.gov/html/dcp/pdf/sidewalk_experience/tools_resources.pdf

2.9 Benches

Benches support community interaction and enhance bus stops, particularly near facilities that serve families or seniors. They may be strategically installed on the street side of the sidewalk facing the building or along the storefront facing the street. They can also serve as tree guards.

NYC Department of Transportation
CITYBENCH
http://www.nyc.gov/html/dot/html/pedestrians/citybench.shtml

.1 Provide backs and dividers on benches. Backs are not required for bus stops or for benches that are against the facade. Refer to DOT's CityBench program for more details.

.2 Maintain an 8 foot clear space on sidewalk path for unimpeded sidewalk traffic. For high-pedestrian-traffic areas, maintain 10 feet clear.

NYC Department of Environmental Protection
STANDARDS FOR GREEN INFRASTRUCTURE
http://www.nyc.gov/html/dep/pdf/green_infrastructure/bioswales-standard-designs.pdf

2.10 Exterior Power

Exterior electrical outlets are beneficial to the building staff for maintenance and the local community for events. Locations and access to outlets should be conveniently placed.

.1 Provide exterior outlets that lock and ensure that they are secured properly to protect the public and minimize liability.

2.11 Open Store Frontage

An operable facade that opens onto the sidewalk can be highly desirable for pedestrians as well as retailers at restaurant and supermarket locations. Sidewalk seating or retail displays can enhance activity and visual interest. Refer to code and zoning regulations when planning an operable facade.

.1 Consider providing an operable facade in spaces where a restaurant tenant is a priority.

.2 Plan for an operable facade from the outset of the design and provide support for panels; coordinate slab and grade levels with required services.

SECTION 3 ELEMENTS

3.1 | Ceiling Height
3.2 | Footprint/Area
3.3 | Column Spacing
3.4 | Floor Slab
3.5 | Storage

SECTION 3

Interior Architecture

OBJECTIVES

Well-designed and flexible retail space can accomodate a variety of tenants, provide amenities to neighborhoods, increase the connection between the interior and exterior, and make retail spaces more desirable and leasable to tenants. Designs that facilitate a range of uses can also better adapt to changes in the market.

ELEMENTS

3.1 Ceiling Height

Tall ceilings help create an open, inviting environment. Adequate ceiling heights accommodate mechanical, lighting, and sprinkler systems. Greater heights also improve the look and proportion of retail spaces. From the street, a higher ceiling allows for greater visibility into the retail space above cars, pedestrians, and other elements in the foreground.

CASE STUDY

CRITICAL SUCCESS FACTOR 7 ADEQUATE HEIGHT

JOSEPH HUENNEKENS

EXTRA PLACE

Extra Place Apartments provides 41 units of affordable housing in New York's rapidly changing East Village. The two-tone brick building features five floors of affordable units on top of a large first-floor retail space. Extra Place's high ceilings grant retail tenants significant flexibility in fitting out the space. The ample height can accommodate a wide variety of tenant types and mechanical, electrical, and plumbing (MEP) systems without sacrificing transparency. The investment in high ceilings makes the building more attractive to potential retailers and neighborhood residents.

DEVELOPER
Phipps Houses

DESIGN ARCHITECT
Arquitectonica

LOCATION
New York, NY

Typically, block-and-plank structures create greater limitations on ceiling height because they tend to require deeper spanning beams at the ground-floor ceiling. Reinforced concrete structures often carry the loads directly through the ground floor and are less limiting because deep transfer beams are not required. Adequate ceiling heights should be provided regardless of the structural system that is used.

.1 Provide a minimum of 15 feet floor-to-floor height and a minimum 14 feet, 4 inches clear floor-to-underside of slab height in the retail areas.

.2 Maintain a clear span of 12 feet above the finish floor level (AFFL). No pipe, conduit, or other utility running horizontally in the ceiling should be lower than 12 feet above the retail floor slab. Particular attention should be paid to the turnout for plumbing stacks, drain lines, and other systems coming from the residential spaces above the retail space. To the degree possible, horizontal pipe runs should be installed as close to the underside of the floor slab above as possible in order to facilitate tenant fit-out and maintain higher ceiling heights.

.3 Coordinate the ground-floor ceiling height with the facade to ensure that louvers, mechanical, electrical, and plumbing (MEP) equipment, and security gates (if required) all clear the structure at the facade while providing the required storefront glazing zone.

.4 Design the second-floor slab to support heating, ventilation, and air-conditioning (HVAC) equipment in the ceiling of the retail space below. If the intent is to have packaged units in the retail space rather than remote air handlers, the space should be designed to accommodate the additional load and isolate vibrations. Refer to Sections 4-6: Mechanical, Electrical, and Plumbing and Fire Protection.

.5 Avoid locating building shutoff valves and access panels in the ceiling of the commercial space to eliminate access problems for retailers and building maintenance staff. Refer to Sections 4-6: Mechanical, Electrical, and Plumbing and Fire Protection.

3.2 Footprint/Area

Contiguous retail space within a development is ideal because it provides the most flexibility for configuring a variety of retail tenant types. By offering the largest possible footprint, the space can be leased by a single tenant or sub-divided for multiple smaller tenants. A contiguous ground-floor space provides a more continuous retail presence on the facade, contributing to a more active street life.

Square footage for uses prioritized in these guidelines are:

Small < 4,000 square feet
Laundromat
Community Use • Childcare/Pre-K Center • Health Facility • Cultural Space

Large ≥ 4,000 square feet
Bank
Full-Service Pharmacy
Full-Service Restaurant
Grocery Store
Major Drugstore with Pharmacy (>10,000 sf)
Supermarket (>10,000 sf)
Community Use • Childcare/Pre-K Center • Health Facility • Cultural Space

.1 Design storefronts to be at least 23 feet wide. At no point should storefronts be less than 18 feet wide.

.2 Design the retail space to be a minimum of 65 feet deep from facade to rear wall. At no point should storefronts be less than 30 feet deep from facade to rear wall.

.3 For larger stores, design the maximum depth of the retail space to be 70 feet. Space behind this depth is often used for storage or administration.

.4 Locate residential entry and egress corridors to minimize the disruption of the continuous retail floor plate.

.5 Determine whether a second means of egress is required by code if planning for a larger store.

3.3 Column Spacing

Column spacing affects a retailer's ability to lay out fixtures and displays in an organized way. Typically, column layout at the ground floor is dictated by the structural requirements of the housing above. Careful planning of the structural layout of residential units, with the objective of making a more regular and open column layout at the ground floor, can help produce a better retail space without additional construction costs. However, the column layout must never compromise the efficiency or legal compliance of the unit layouts of the building.

.1 Maximize column spacing to allow for more flexibility in the layout of retail space, thus appealing to a greater number of retailers.

.2 Regularize column spacing, and extend the grid from the interior to the street. This simplifies interior layouts and allows for flexibility with shelving and displays.

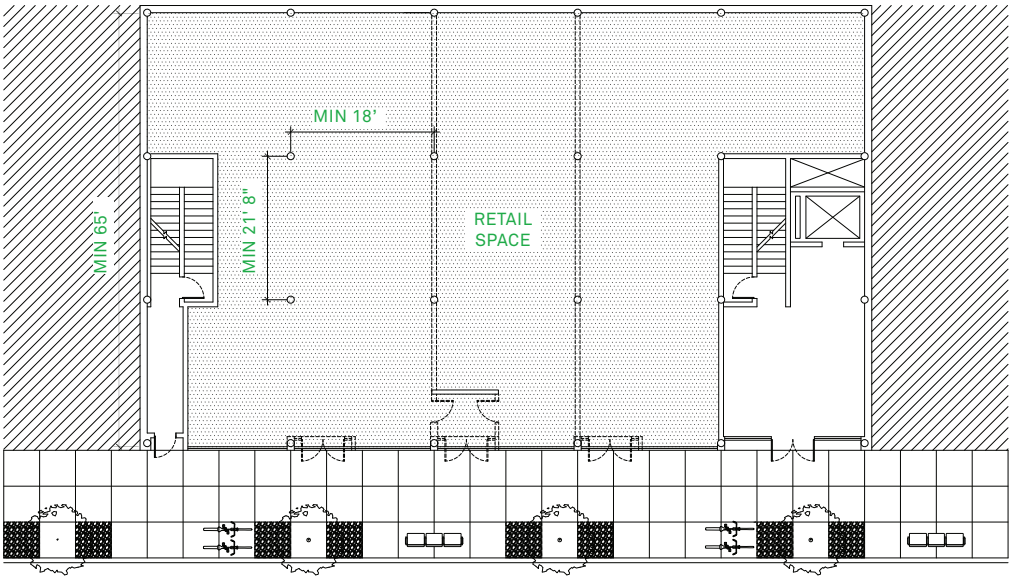

CASE STUDY

CRITICAL SUCCESS FACTOR 8 ORGANIZED COLUMN GRID

HALKIN MASON PHOTOGRAPHY FOR WRT

PASEO VERDE

Paseo Verde is a LEED-Platinum complex housing 120 affordable and workforce rental units. The building features 4,000 square feet of retail space within a ground-floor retail and office podium. Paseo Verde provides much-needed commercial space in a neighborhood lacking in retail diversity. The project's straightforward column grid allows the space to accommodate a diversity of tenant types. The regularized grid grants tenants the ability to easily install fixtures and displays. This adds value to the retail spaces, attracts higher-quality retail tenants, and enhances quality of life for residents and the community.

DEVELOPER
Asociación de Puertorriqueños en Marcha (APM) and Jonathan Rose Companies

DESIGN ARCHITECT
WRT

LOCATION
Philadelphia, PA

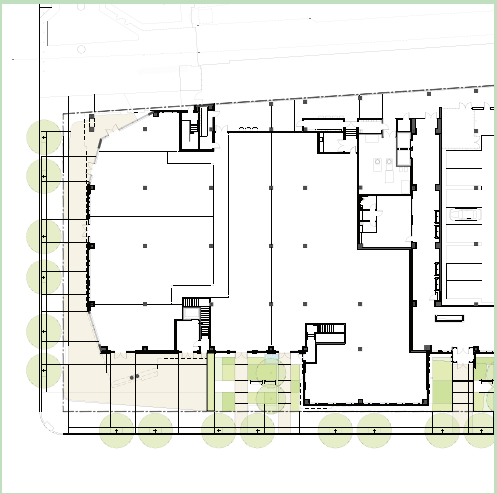

WRT

3.4 Floor Slab

Setting the interior elevation of the retail floor slab to the exterior sidewalk is an important decision that can affect the accessibility of the space as well as the flooring material options for tenant fit-outs.

.1 Coordinate the elevation of the retail floor slab with the exterior grade and sidewalk conditions in order to maximize accessibility from the sidewalk into the entire retail floor plate. Refer to 2.1 On-Grade Entry.

.2 Set the retail floor slab at the lowest access point in locations with a significant grade-change. In the future, additional access points can then be added by infilling. Failing to set the slab at the lowest point precludes additional subdivisions in the future without ramps, steps, or mechanical solutions to grade change.

.3 Provide an accessible space beneath the slab (basement, cellar, or crawl space) whenever possible in order to accommodate MEP requirements of future ground-floor retail tenants. If a basement/cellar cannot be accommodated, a crawl space should be at least 2 feet deep to facilitate future mechanical systems.

.4 Consider the thickness of possible future floor finishes when setting the rough slab and finish floor height. Typically, thicker materials like terrazzo and stone require minimum slab depressions of 2 inches. Even thin materials such as VCT (vinyl composition tile) or linoleum usually require a self-leveling floor preparation before the floor finish is installed. For this reason a minimum depression of a half-inch below the anticipated finished floor elevation is recommended.

3.5 Storage

Designated storage is not essential in attracting most retail tenants. However, the less retail floor area that a tenant has to dedicate for storage, the more they will pay for this floor area. If additional storage is available in the basement or in an adjacent ground-floor space, locate the storage areas to be directly accessible from the retail space.

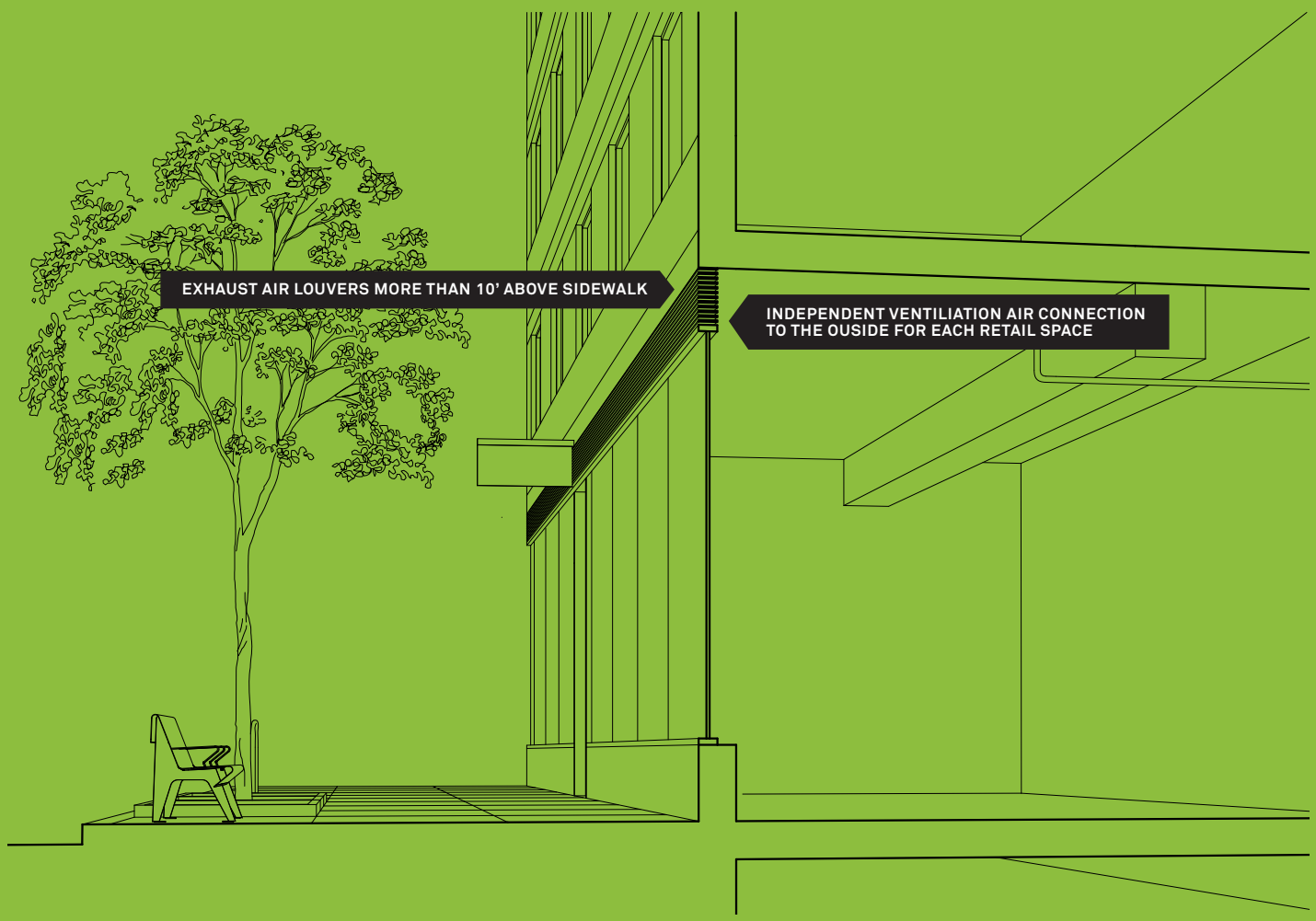

SECTION 4 ELEMENTS

4.1 | Heating
4.2 | Cooling
4.3 | Fresh-Air Ventilation
4.4 | Air-Side Economizers
4.5 | Exhaust Air
4.6 | Kitchen Exhaust
4.7 | Air-Handling Units
4.8 | AHU Intake and Exhaust
4.9 | Base-Building Requirements
4.10 | Separate Metering

SECTION 4

Mechanical

OBJECTIVES

Mechanical services include heating, cooling, and ventilation. These services are typically provided by the developer or the tenant. The mechanical system can be provided through separate systems, or two or more of the services can be provided through one system.

The descriptions below outline the most frequently specified systems in New York City and are intended to provide enough information for planning purposes. Systems must be designed to current codes by registered professionals and submitted for permitting to the appropriate agencies.

Good mechanical design can make retail spaces more attractive to tenants by making them easier and faster to fit out and by allowing for flexibility of retail uses and configurations. Each retail space should have enough flexibility in the installed services to accommodate a number of different retail, community, or cultural uses. Services should be provided to allow for different sizes of retail units ranging from 2,000 square feet to 10,000 square feet. This improves spatial flexibility and can be achieved through design of the retail module.

Mechanical fit-out should be possible without undue impact on residential tenants or other retailers. A smooth fit-out simplifies negotiation and lowers costs. Where possible, the base-building systems should be designed to include capacity for heating and cooling for the retail units. This reduces the impact of new services on the building infrastructure and tenants. It may also help minimize the overall energy use of the building.

Base-building services should not be located inside the retail units whenever possible. Locating base-building valves, meters, and other equipment that requires access outside of retail spaces minimizes tenant disruption. Hot water from heating and chilled water for heating, ventilation, and air-conditioning (HVAC) provided by the landlord, or steam provided by the utility, is preferred because it minimizes the number and complexity of the systems that the tenants need to provide and that need to be retrofitted into the building. Using base-building chilled water for cooling will eliminate the tenants' need for exterior space for heat rejection.

ELEMENTS

4.1 Heating

›

p 72–79 Applications

For examples of how mechanical services differ by use, refer to the mechanical overlay of each SAMPLE CONFIGURATION OF GROUND-FLOOR RETAIL TENANTS diagram.

Four options are described, in order of preference:

A Developer provides a boiler or heat pump which supplies metered heating hot-water for connection to a tenant's air-handling system that includes a hot-water coil. If the unit is not leased, a connection should be made to a temporary hot-water unit heater to maintain freeze protection for sprinklers and other wet services. This is the preferred option because it eliminates the need for combustion air for boilers and reduces the amount of leased space needed for the boiler flue.

B Developer provides condenser water connection to a tenant's air-handling system that includes a heat pump. If the unit is not leased, a heat pump will be connected by the landlord to maintain freeze protection. A larger tenant electrical service will be required than for Option A.

C Utility company provides steam to the tenant space. Utility steam meters are large, so steam use by the tenant should be metered by the landlord from the landlord service. If the unit is not leased, steam should be provided to a unit heater or perimeter heating for freeze protection.

D Tenant provides a boiler within the tenant space. This will require a gas connection, combustion air make-up, and a boiler flue. It is not recommended because it does not provide freeze protection to unleased space and is complicated and costly to install for a single tenant.

4.2 Cooling

Five options are described, in order of preference:

A Developer installs a chiller or heat pump which provides metered chilled water for connection to a tenant's air-handling system that includes a chilled-water coil. If the unit is not leased, this connection will be capped. This is the preferred option because it is energy-efficient, operates quietly, and does not require tenant access to roof or courtyard space. This option assumes that chilled water will be provided to the residential units, which may not be cost-effective in affordable housing.

B Developer provides condenser water for connection to a tenant's air-handling system that includes a heat pump. This requires that the building has a condenser water loop connected to a cooling tower. This is a good option but is less energy-efficient and noisier than Option A. A larger electrical service will be required for this option than for Option A. This option does not require tenant access to roof or courtyard space. This option assumes that condenser water will also be provided to the residential units, which may not be cost-effective in affordable housing.

C Developer provides connection to a tenant's air-handling system that includes a variable refrigerant flow (VRF)/refrigerant cooling coil. This requires that the building has a refrigerant system available. This option is not applicable for buildings taller than 160 feet (due to limitation of refrigerant system design). This system is atypical in New York but is energy-efficient, operates quietly, and does not require tenant access to the building's roof or courtyard. A single VRF system could serve a number of retail spaces.

D Tenant provides direct expansion (DX) refrigerant cooling system. In this case the tenant will provide an air-handling system that includes a refrigerant cooling coil (also known as an evaporator section) and an external condenser unit. The external unit will be located on a roof or courtyard. The maximum height difference between the evaporator and condenser units is 160 feet (due to limitation of refrigerant system design). The maximum piping distance between the evaporator and condenser units is 540 feet. The developer provides a pathway from the tenant space to the external unit for refrigerant piping and tenant power. Refrigerant piping and conduit for power should be installed during base-building construction.

E Tenant provides DX refrigerant cooling system integrated into an air-handling unit (AHU). In this case the tenant will provide a ceiling-mounted air-handling system that includes a refrigerant cooling coil (also known as an evaporator section) and a condenser section that is separately ducted to the outside through louvers. This option is less energy-efficient and noisier for the tenants than all other options. It also requires additional louver area to allow for the cooling of the condenser section. This option is appropriate only for tenant spaces less than 4,000 square feet.

US Green Building Council
LEED GREEN BUILDING RATING SYSTEM
http://www.usgbc.org/Docs/LEEDdocs/LEED_RS_v2-1.pdf

City of New York
ONE CITY: BUILT TO LAST
http://www.nyc.gov/html/builttolast/pages/home/home.shtml

New York State Energy Research and Development Authority
ENERGY EFFICIENCY INCENTIVES
http://www.nyserda.ny.gov/All-Programs, http://www.nyserda.ny.gov/Business-and-Industry/Retail

4.3 Fresh-Air Ventilation

Ventilation removes odors and provides fresh air for occupants and operation of mechanical equipment. A mechanical ventilation system is required by code unless there is a minimum operable facade area equal to 4% of the occupiable floor area. For a 2,000-square-foot unit, the required operable area would be 80 square feet. A typical door opening is around 20 square feet. As this example illustrates, it is probably impractical for most retail tenants to rely on natural ventilation. Provision should be made for air intakes and exhausts to serve each retail space. Sizes are described in the intake and exhaust section. These will connect to an air-handling system that may be located in the ceiling of the retail unit, on the roof above the retail unit, or in a space to the rear of the retail unit.

3.1 Provide each retail space with its own independent connection to the outside for ventilation air. This can be provided through louvers on the street face of the retail unit for ceiling-mounted AHUs or directly into the unit by externally mounted AHUs. The base building must be designed to allow for the installation of retailer ventilation.

3.2 Follow NYC Building Code minimum fresh-air ventilation rates. These rates depend on expected occupancy and space definition. A preliminary working assumption is that a minimum of 0.3 cfm/sf of outside air should be provided for all retail spaces, but this must be checked against the proposed use of the retail space.

3.3 Follow NYC Building Code guidelines for the location of fresh air openings. In general, fresh air intakes must be located 20 feet from the nearest contaminant source (or be at least 2 feet below it), and 10 feet from the lot line unless they are on the street side, in which case they can be 10 feet from the centerline of the street and 10 feet from any building on the same lot.

4.4 Air-Side Economizers

In temperate climates like New York, energy savings can often be made by using an air-side economizer. An air-side economizer works by providing more fresh air to the AHU when the outside conditions are closer to the required supply condition than the return air is. Economizers allow for 'free' cooling and are required on AHUs above a minimum size.

4.1 Determine whether an air-side economizer is required by following the minimum size given in the NYC Energy Code. An initial working assumption is 5,000 cfm. If an economizer is required, then the working assumption for fresh air provision is 1 cfm/sf of outside air for all retail spaces.

4.5 Exhaust Air

A means of exhausting air will be needed for restrooms and kitchens. Exhaust may also be required from dryers in laundromats. Particular retail uses such as printers, nail salons, or hairdressers may have additional ventilation requirements for the associated chemicals used in the space. Noxious exhaust air from these uses cannot be recirculated and must be exhausted using a separate fan.

5.1 Follow NYC Building Code guidance for the location of exhaust air openings. In general, exhaust air louvers are located 10 feet above the sidewalk, 10 feet from any window in an adjacent building, and 10 feet from a residential window in the same building. If the exhaust can be considered a contaminant source it must be located 20 feet from the nearest intake (or be at least 2 feet above it).

Enterprise Green Communities
2015 ENTERPRISE GREEN COMMUNITIES CRITERIA
http://www.enterprisecommunity.com/solutions-and-innovation/enterprise-green-communities/criteria

New York City Department of Housing Preservation and Development
ENTERPRISE GREEN COMMUNITIES CRITERIA CERTIFICATION OVERLAY FOR NYC HPD PROJECTS
http://www1.nyc.gov/assets/hpd/downloads/pdf/developers/HPD-Overlay.pdf

›

p 77 Applications

For an example of an exhaust system in a laundromat, refer to TENANT DIAGRAM 2: THREE TENANTS MEP.

4.6 Kitchen Exhaust

›

p 77, 79 Applications

For examples of kitchen exhaust systems, refer to TENANT DIAGRAM 2: THREE TENANTS MEP and TENANT DIAGRAM 3: FIVE TENANTS MEP.

NYC Department of Buildings
2014 CONSTRUCTION CODES
http://www.nyc.gov/html/dob/html/codes_and_reference_materials/2014_construction_code.shtml

When restaurant or food tenants are desired, designers must plan for kitchen exhaust. Kitchen exhaust air requirements are much larger than normal retail exhaust requirements. Exact sizes depend on the type of cooking and the size of the grease hood. There are many NYC Building Code requirements.

.1 Follow all NYC Building Code requirements for kitchen exhaust. For initial planning, the following elements are important:

- **Horizontal duct runs must be sloped**
- **Ducts must be thicker-gauge steel than most ductwork**
- **Accessible reservoirs must be provided at each vertical riser**
- **Fire protection is required where the duct passes through a rated wall or floor and must be continuous until the duct terminates**
- **Kitchen exhaust is considered to be contaminant exhaust and must be at least 10 feet from all intake openings and 10 feet above grade**
- **Ducts must be enclosed in a fire-rated enclosure**
- **Access may be required at intervals along the exhaust. Required access points should not be located in tenant space.**

The base building should include kitchen exhaust ducts, to accommodate food-related tenants, according to the total retail square footage of the building:

TOTAL RETAIL AREA	NUMBER OF KITCHEN EXHAUST DUCTS
< 5,000 SF	None
5,000 SF – 10,000 SF	1
10,000 SF – 20,000 SF	2

.2 Ensure that all exhaust ducts run within a fire-rated enclosure, with access points as defined by code, running from a designated kitchen area to the roof. The duct should be capped until a tenant requiring a kitchen is secured. The landlord should then install and maintain the kitchen exhaust fan at the roof. Electricity used to run the fan should be charged to the tenant. The tenant installs all required hoods and kitchen ventilation equipment within the retail space. Additional make-up air or heating may be required due to high exhaust rates. The base-building design team should consider the possible advantages and code implications of using an ozone or other grease removal system within the tenant space. This will add cost to the system overall but will reduce the requirements for clean-outs and extend the life of the kitchen exhaust fan.

A detailed tool, developed by **Arup** for the **Design Trust for Public Space**, can be used to determine how the MEP guidelines may impact project budgets.
COST ESTIMATE TOOL
http://www.designtrust.org/projects/groundwork/activities-and-outputs/

4.7 Air-Handling Units

Typical mechanical ventilation systems for retail units provide heating, cooling, and ventilation. A common solution is an air-handling unit that draws air from outside, mixes it with air from within the space, filters the air, and then cools or heats it depending on the requirements. This AHU may be suspended from the slab above the retail space, placed on a roof directly above the retail space, or located in a room adjacent to the retail space. The choice of location will depend on the size of the retail space, the available ceiling height, the location of supply air louvers, and the cost and energy efficiency of the AHU. Where heating and cooling will be installed by the retailer, space (shafts, roof area) must be allowed for these services.

Four options are described, in order of preference:

A Tenant installs a ceiling-mounted, single-zone or two-zone AHU in the retail space with louvered connections to the outside on the street face of the retail space, and an independent demand-controlled exhaust fan to serve the staff restroom and storage areas. This allows the retail unit to be self-contained. This is practical only for small retail units where no economizer is required.

RETAIL UNIT SIZE	AHU SIZE
< 4,000 SF	6' long, 4' wide, 2' 6" tall

B Tenant installs a ceiling-mounted, single-zone or multizone AHU in the retail space with a connection to the outside at the roof level in the building or rear yard. Ducts to and from the roof will serve multiple retail units. Independent, demand-controlled exhaust fans serve the staff restroom and storage areas. This option eliminates the need for louvers at the building facade. Additional space is needed for the supply ducts to run through the residential part of the building. The retail tenant requires no roof access.

RETAIL UNIT SIZE	AHU SIZE
< 4,000 SF	6' long, 4' wide, 2' 6"tall
4,000 SF – 6,000 SF	8–10' long, 4'wide, 3' 6"tall
6,000 SF –10,000 SF	12–15' long, 6–8' wide, 5–8' tall

C Tenant installs a roof-mounted, multizone AHU above the retail space. Outside air connections are made directly into the AHU. Independent, demand-controlled exhaust fans are installed to serve the staff restroom and storage areas. This option is likely to be most appropriate for large retail spaces. The tenant will need access to outside space. There may be nuisance noise issues if apartments front onto the mechanical area. Sizes are the same as for Option B.

D Tenant installs a single- or multi-zone AHU mounted in the mechanical room to the rear of the retail space or above a storage space within the retail unit. Fresh air intake is from the rear yard or roof as in Option B. Sizes are the same as for Option B.

CASE STUDY

CRITICAL SUCCESS FACTOR 9 ADEQUATE, INDIVIDUALLY METERED UTILITIES AND MEP SERVICE

JOSEPH HUENNEKENS

GOTHAM WEST

Gotham West features 682 affordable units in a mixed-income building. The base of the 31-story complex includes a 10,000-square-foot food hall, green-space for tenants, and a new building for Elias Howe School PS 51. Gotham West's food hall requires a complex mechanical, electrical, and plumbing (MEP) system that can accommodate a large amount of kitchen exhaust. The visual impact of the MEP system is minimized through the integration of louvers into the facade. The majority of the exhaust is directed toward the sides of the building to shield pedestrians and enhance the attractiveness of the building's front. All louvers are located flush with the building and are made of the same dark metal as the windows and doors. They are also fitted with steel supports that echo the rhythm of the mullions below. These design choices temper the visual impact of the large MEP system and allow the building to service a wide array of tenant types.

DEVELOPER
Gotham Organization

DESIGN ARCHITECT
SLCE Architects

LOCATION
New York, NY

4.8 AHU Intakes and Exhaust

Air handler units have both intake and exhaust connections to the outside. For more information on louver placement refer to Element 1.3 Louvers.

Two options are described:

A Developer installs intake and exhaust louvers on the street facade of the retail unit or other facade adjacent to retail space.

Approximate size per 1,000 square feet at 0.3cfm/sf = 0.75 square feet face area (at 50% free area).

Approximate size per 1,000 square feet at 1cfm/sf (with economizer) = 2.5 square feet face area (at 50% free area).

This allows the retail unit to be self-contained, but separations between supply and exhaust and between exhaust and residential windows and lot lines must be maintained. Louvers are provided by the developer (to ensure matching across retail frontage) or the tenant. If a ducted condenser unit (Element 4.2 Cooling, Option B) is used, additional louver area is required.

B Developer installs intake and exhaust louvers at roof level, serving multiple retail units.

Assume five retail units at 2,000 square feet and 1cfm/sf (with economizers).

Roof intake louver face area is approximately 20 square feet, and duct size to retail units is approximately 2 feet by 3 feet, including insulation.

This option helps maintain separations between supply, exhaust, and windows. The developer provides duct and louvers. If a ducted condenser unit (Element 4.2 Cooling, Option B) is used, additional louver area is required.

›

p 73 Applications

For an example of an air lock, refer to TENANT DIAGRAM 1: SUPERMARKET.

4.9 Base-Building Requirements

The floor structure at the level above the retail unit must be designed to provide enough structural capacity to support MEP equipment. Vibrating MEP equipment, such as fans, fan coils, and packaged air-handling equipment, should be supported on vibration isolators to minimize transmission of noise and vibration to the rest of the building.

.1 Provide adequate, uninterrupted ceiling height below beams and equipment serving other parts of the building to allow for the installation of necessary retail services, including MEP equipment. This height will depend on the type and size of retail unit proposed.

.2 Provide lobbies or air locks at entrance doors. Recent code changes require lobbies on almost all regularly used doors, even in small retail units. Design teams must check current energy code provisions.

›

p 74–75, 77, 79 Applications

For examples of separate metering, refer to TENANT DIAGRAM 1: SUPERMARKET MEP; TENANT DIAGRAM 2: THREE TENANTS MEP; AND TENANT DIAGRAM 3: FIVE TENANTS MEP.

4.10 Separate Metering

Separate metering encourages the prudent use of energy by linking the use of the service to the price paid. It also simplifies lease negotiations.

.1 Design each retail space to be metered separately for all utilities, preferably through direct metering by the utility. Submetering from the building is an alternative but requires that the landlord administer billing.

.2 Design each retail space to have the ability for independent control of mechanical services including heating, cooling, and ventilation. This will provide flexibility for the tenant, making the space more attractive.

.3 Meter heating and cooling systems to allow appropriate charge-back to the tenants for the energy used.

SECTION 5 ELEMENTS

5.1 | Normal Electrical Service
5.2 | Disconnect Switch
5.3 | Emergency Power
5.4 | Fire Alarm
5.5 | Separate Metering

SECTION 5

Electrical

OBJECTIVES

Electrical service is essential to the functioning of a retail space. The design of electrical systems should enhance the leasability of the retail space by providing separate meters to retail tenants.

Normal electrical service should be provided to retail spaces without undue impact on residential tenants or other retailers. Base-building services should not be located inside the retail units whenever possible. Base-building valves, meters, and other equipment requiring access must be located outside of retail spaces to minimize tenant disruption. A successfully designed electrical system simplifies negotiation, promotes efficiency, and reduces the price of fit-out.

ELEMENTS

5.1 Normal Electrical Service

Two options are described, in order of preference:

A Landlord provides dedicated utility electrical service to the retail space, separate from the residential building or from a dedicated service switch off of the residential building. The landlord establishes monthly billing by the utility to the tenant, installs all conduits and wires, provides excavation services, and covers utility costs for installing service to tenant space.

B Residential building electrical service connects to the retail unit. Landlord provides sub-meter to monitor electrical consumption, bills tenant, and installs all conduits and wires, provides excavation services, and covers utility costs for installing service to tenant space.

5.2 Disconnect Switch

Disconnect switches are used to aid inspection and maintenance of the electrical system.

2.1 Provide a disconnect switch accessible to the tenant. The tenant makes all connections from the load side of the disconnect switch and provides necessary tenant electrical distribution equipment. The landlord provides the switch.

5.3 Emergency Power

Emergency lighting must be provided in most retail spaces.

3.1 Require tenant to provide integral 90-minute battery packs with fluorescent light fixtures and exit signs or provide a central battery inverter.

3.2 Determine whether emergency power is required for systems other than emergency lighting within the building (e.g., smoke control, elevators). If so, a generator will be required, and tenant emergency power may be able to connect to this generator.

5.4 Fire Alarm

NYC Building Code dictates when a fire alarm system is needed. In buildings where a fire alarm system is not required by code, the tenant space should still be provided with one, even to vacant retail spaces.

4.1 Provide a telephone line for connection to a remote central station for monitoring of the fire alarm system.

4.2 Provide a signaling line circuit (SLC) from the building's fire alarm system into the tenant space for connection into the tenant's fire alarm system. The tenant will provide the necessary fire alarm equipment to monitor and control the tenant's fire alarm system. The tenant space will need to be connected into the building's fire alarm system to activate the building's fire alarm devices in the event of a fire condition in the tenant space and vice versa.

5.5 Separate Metering

Separate metering improves energy efficiency and simplifies lease negotiation.

5.1 Design each retail space to have the ability for independent control of power.

SECTION 6 ELEMENTS

6.1 | Domestic Water Service
6.2 | Hot Water
6.3 | Sanitary Waste and Ventilation
6.4 | Grease Waste
6.5 | Gas
6.6 | Fire Protection Systems – Wet Sprinkler System
6.7 | Fire Protection Systems – Standpipe System
6.8 | Separate Metering

SECTION 6

Plumbing and Fire Protection

OBJECTIVES

Well-designed plumbing service and fire protection systems are essential to successful retail units. The design of plumbing and gas systems should enhance the leaseability of the retail space by providing separate meters to retail tenants.

Plumbing and fire protection service should be provided to retail spaces without undue impact on residential tenants or other retailers. Base-building services should not be located inside the retail units whenever possible. Base-building valves, meters, and other equipment requiring access must be located outside of retail spaces to minimize tenant disruption.

ELEMENTS

6.1 Domestic Water Service

The building will have its own dedicated water service from the NYC Department of Environmental Protection (DEP).

.1 Provide each retail space with its own domestic water sub-meter with a valve and capped connection within the space. The tenant will then have the ability to customize the water distribution within the space.

.2 Determine whether additional sub-meters may be required based upon NYC Building Code (i.e., commercial laundromat.)

6.2 Hot Water

›

p 77 Applications

For an example of a hot water system refer to TENANT DIAGRAM 2: THREE TENANTS MEP.

Hot water can be provided by the landlord or by the tenant. The amount of hot water required and the means of creating the hot water are determined by the type of facility and the type and quantity of fuel available (gas, electric, steam, etc.). Larger facilities, such as gyms with showers or restaurants with kitchens, require larger quantities of water and typically require storage-tank-type heaters. If the retail space has only staff restrooms, instantaneous under-counter water heaters may be used.

6.3 Sanitary Waste and Ventilation

›

p 73, 76, 78 Applications

For examples of bathroom layouts, refer to TENANT DIAGRAM 1: SUPERMARKET; TENANT DIAGRAM 2: THREE TENANTS; AND TENANT DIAGRAM 3: FIVE TENANTS.

The building will have its own dedicated sewer service to which the tenant will need to connect. The service will usually be located in the basement or below the floor slab depending on the location/elevation of the city sewer in the street. Since sanitary waste piping is run at a slope and the piping is installed below the floor slab, potential locations for plumbing fixtures will be fixed during base-building design. Provide backflow preventers in accordance with NYC Building code. If flexibility is required within a given zone, as it may be for gyms or supermarkets, this may be achievable through a locally dropped floor slab. For more information see Element 3.4 Floor Slab.

Retail spaces should have separate toilet facilities for staff use, with provisions for customer use in some of the retail spaces.

Two options are described:

A Developer provides a capped waste pipe in a preset location for the tenant to connect plumbing fixtures, and a capped vent system connection at high level within the retail space for the tenant to connect to.

B Developer provides a capped waste pipe connection within a trench to allow the tenant some flexibility for fixture layout, and a capped vent system connection at high level within the retail space for the tenant to connect to.

NYC Department of Buildings
2014 CONSTRUCTION CODES
http://www.nyc.gov/html/codes_and_reference_materials/2014_construction_code.shtml

NYC Department of Buildings
2014 ENERGY CODE
http://www.nyc.gov/html/dob/html/codes_and_reference_materials/nycecc_main.shtml

6.4 Grease Waste

Facilities that prepare food will require grease interceptors before the waste piping can connect to the building sanitary waste system. The size of the grease interceptor is based upon the connected load of fixtures where grease may be present. A small food preparation facility with a single triple pot sink will have a much smaller grease interceptor than a commercial kitchen with various fixtures and sinks.

.1 Determine whether the space requires a localized interceptor for each fixture or a central larger interceptor for all fixtures. The localized interceptor can be located on the ground next to the fixture it is serving such as a sink. Larger interceptors will need to be located on the floor below or in a depression in the slab as indicated in the sanitary waste section.

.2 Maintain all grease traps and interceptors for their continued functionality. Fixed furniture or stored materials should not block access. The lease should clearly identify responsibility for maintenance. A professional should carry out maintenance regularly.

6.5 Gas

Many buildings, especially buildings with food-related tenants, have natural gas connections.

.1 Provide a capped and valved connection within the space if the tenant facility will be offered gas for either cooking or hot water generation.

.2 Provide gas piping back to the meter room. The tenant should arrange for a gas meter to be installed by the gas utility company once they occupy the space. (Please note that gas rates are different based upon the gas usage.)

6.6 Fire Protection Systems – Wet Sprinkler System

The entire building will have its own sprinkler service.

.1 Provide the tenants with their own floor-control assembly within the retail space. The floor-control assembly consists of a shutoff valve, flow switch, and test valve. The purpose of the independent floor-control assembly is to allow the tenant to perform alterations to their space without affecting the rest of the building sprinkler system.

.2 Require the tenant to perform periodic tests on their zone as required by code. By having a separate zone, the fire alarm system will be able to locate the exact retail unit during a fire event and relay this information to the fire department.

6.7 Fire Protection Systems – Standpipe System

Typically there are standpipes with fire department hose valves within staircases for fire department use.

.1 Provide an additional hose valve if the path to the staircase or nearest fire department hose valve is obstructed, inaccessible, or too far away from the retail unit.

6.8 Separate Metering

Separate metering encourages the prudent use of water and gas by linking the use of the service to the price paid. It also simplifies lease negotiations.

.1 Design each retail space to have the ability for independent control of plumbing and fire protection services including gas, water, sanitation, fire alarm, and fire protection. This will provide flexibility for the tenant, making the space more attractive.

Applications

Design Guidelines for Small Retail Space
Design Guidelines for Large Retail Space
Sample Configurations of Ground-Floor Retail Tenants

Design Guidelines for Small Retail Space (<4,000 sf)

Design Guidelines for Small Retail Space (<4,000 sf)

This chart outlines the design guidelines associated with critical success factors for groundfloor retail and community use. See the Zoning Resolution of the City of New York regarding use-type allowances by area.

	FACADE AND SIGNAGE			EXTERIOR ACCESS AND STREETSCAPE			INTERIOR ARCHITECTURE		MECHANICAL			ELECTRICAL				PLUMBING AND FIRE PROTECTION				
SUCCESS FACTORS	FACTOR 1	FACTOR 2	FACTOR 3	FACTOR 4	FACTOR 5	FACTOR 6	FACTOR 7	FACTOR 8	FACTOR 9			FACTOR 9				FACTOR 9				
Elements	Clear glazing: 2′ to 10′ above sidewalk	Separate, well-defined retail entry	Blade signage in addition to signage band	Exterior building down-lighting	Slab at lowest access point for future on-grade entries	Peripheral amenities (bike racks, benches)	Ceiling height: floor to slab	Organized column grid for flexible layout	Ventilation System	Cooling	Heating	Normal Electrical Service	Tenant Disconnect Switch	Emergency Power	Fire Alarm	Domestic Water	Domestic Hot Water	Sanitary Waste and Ventilation	Grease Waste	Gas
Base Retail Space (un-programmed)	70%	✓	✓	✓	✓	✓	14′– 4″	✓	Minimum code fresh air, WC exhaust	✓	✓	✓	✓	Lighting only	✓	✓	Instantaneous	Tenant WC, equipment	✗	✗
Clothing & Accessories Store	70%	✓	✓	✓	✓	✓	14′– 4″	✓	Minimum code fresh air, WC exhaust	✓	✓	✓	✓	Lighting only	✓	✓	Instantaneous	Tenant WC, equipment	✗	✗
Convenience Store	70%	✓	✓	✓	✓	✓	14′– 4″	✓	Minimum code fresh air, WC exhaust, equipment ventilation*	✓	✓	✓	✓	Lighting only	✓	✓	Instantaneous	Tenant WC, equipment	✗*	✗*
Coffee Shop	70%	✓	✓	✓	✓	✓	14′– 4″	✓	Minimum code fresh air, WC exhaust, equipment ventilation*	✓	✓	✓	✓	Lighting only	✓	✓	Instantaneous	Tenant WC, customer WC, equipment	✗*	✗*
Dry Cleaner	70%	✓	✓	✓	✓	✓	14′– 4″	✓	Minimum code fresh air, WC exhaust, equipment ventilation*	✓	✓	✓	✓	Lighting only	✓	✓	Instantaneous	Tenant WC, equipment	✗	✗
Electronics Store	70%	✓	✓	✓	✓	✓	14′– 4″	✓	Minimum code fresh air, WC exhaust	✓	✓	✓	✓	Lighting only	✓	✓	Instantaneous	Tenant WC, equipment	✗	✗
Financial Services Center	70%	✓	✓	✓	✓	✓	14′– 4″	✓	Minimum code fresh air, WC exhaust	✓	✓	✓	✓	Lighting only	✓	✓	Instantaneous	Tenant WC, equipment	✗	✗
Food Store–Takeout	70%	✓	✓	✓	✓	✓	14′– 4″	✓	Minimum code fresh air, WC exhaust, equipment ventilation*	✓	✓	✓	✓	Lighting only	✓	✓	Instantaneous	Tenant WC, equipment	✗*	✗*
Food & Beverage Specialty Store	70%	✓	✓	✓	✓	✓	14′– 4″	✓	Minimum code fresh air, WC exhaust, equipment ventilation*	✓	✓	✓	✓	Lighting only	✓	✓	Instantaneous	Tenant WC, equipment	✗*	✗*
Hair Salon	70%	✓	✓	✓	✓	✓	14′– 4″	✓	Minimum code fresh air, WC exhaust, equipment ventilation*	✓	✓	✓	✓	Lighting only	✓	✓	Instantaneous/ storage	Tenant WC, customer WC, equipment	✗	✗
Laundromat	70%	✓	✓	✓	✓	✓	14′– 4″	✓	Minimum code fresh air, WC exhaust, dryer exhaust	✓	✓	✓	✓	Lighting only	✓	✓	Instantaneous/ storage	Tenant WC, equipment	✗	✓*
Nail Salon	70%	✓	✓	✓	✓	✓	14′– 4″	✓	Minimum code fresh air, WC exhaust, equipment ventilation*	✓	✓	✓	✓	Lighting only	✓	✓	Instantaneous	Tenant WC, customer WC, equipment	✗	✗
Pop-Up Shop	70%	✓	✓	✓	✓	✓	14′– 4″	✓	Minimum code fresh air, WC exhaust	✓	✓	✓	✓	Lighting only	✓	✓	Instantaneous	Tenant WC, equipment	✗	✗
Community Use: Childcare/Pre-K Center	70%†	✓	✓	✓	✓	✓	14′– 4″	✓	Air-side economizer, kitchen exhaust, WC exhaust	✓	✓	✓	✓	Lighting only	✓	✓	Instantaneous *	Tenant WC, customer WC, equipment	✗	✗
Community Use: Health Facility	70%†	✓	✓	✓	✓	✓	14′– 4″	✓	Minimum code fresh air, WC exhaust	✓	✓	✓	✓	Lighting only	✓	✓	Instantaneous/ storage	Tenant WC, customer WC, equipment	✗	✗
Community Use: Cultural Space	70%†	✓	✓	✓	✓	✓	14′– 4″	✓	Minimum code fresh air, WC exhaust	✓	✓	✓	✓	Lighting only	✓	✓	Instantaneous *	Tenant WC, customer WC, equipment	✗	✗
Art Center	70%	✓	✓	✓	✓	✓	14′– 4″	✓	Minimum code fresh air, WC exhaust	✓	✓	✓	✓	Lighting only	✓	✓	Instantaneous *	Tenant WC, customer WC, equipment	✗	✗
Community Center	70%	✓	✓	✓	✓	✓	14′– 4″	✓	Minimum code fresh air, kitchen exhaust, WC exhaust	✓	✓	✓	✓	Lighting only	✓	✓	Instantaneous/ storage	Tenant WC, customer WC, equipment	✓	✓
Dance Studio	70%†	✓	✓	✓	✓	✓	14′– 4″	✓	Minimum code fresh air, WC exhaust, shower exhaust	✓	✓	✓	✓	Lighting only	✓	✓	Instantaneous/ storage	Tenant WC, customer WC, equipment, shower	✗	✗
Gallery	70%†	✓	✓	✓	✓	✓	14′– 4″	✓	Minimum code fresh air, WC exhaust	✓	✓	✓	✓	Lighting only	✓	✓	Instantaneous	Tenant WC, customer WC, equipment	✗	✗
Performance Space	70%†	✓	✓	✓	✓	✓	14′– 4″	✓	Minimum code fresh air, WC exhaust	✓	✓	✓	✓	Lighting only	✓	✓	Instantaneous	Tenant WC, customer WC, equipment	✗	✗
Religious Facility	70%†	✓	✓	✓	✓	✓	14′– 4″	✓	Minimum code fresh air, WC exhaust*	✓	✓	✓	✓	Lighting only	✓	✓	Instantaneous *	Tenant WC, customer WC, equipment	✗	✗

These uses may require some additional translucent treatments—see privacy strategies diagram in the Tenant Lease Checklist

*Equipment and product dependent

Design Guidelines for Large Retail Space (≥4,000 sf)

Design Guidelines for Large Retail Space (≥4,000 sf)

This chart outlines the design guidelines associated with critical success factors for groundfloor retail and community use. See the Zoning Resolution of the City of New York regarding use-type allowances by area.

	FACADE AND SIGNAGE			EXTERIOR ACCESS AND STREETSCAPE			INTERIOR ARCHITECTURE		MECHANICAL			ELECTRICAL				PLUMBING AND FIRE PROTECTION				
SUCCESS FACTORS	FACTOR 1	FACTOR 2	FACTOR 3	FACTOR 4	FACTOR 5	FACTOR 6	FACTOR 7	FACTOR 8	FACTOR 9			FACTOR 9				FACTOR 9				
Elements	Clear glazing: 2′ to 10′ above sidewalk	Separate, well-defined retail entry	Blade signage in addition to signage band	Exterior building down-lighting	Slab at lowest access point for future on-grade entries	Peripheral amenities (bike racks, benches)	Ceiling height: floor to slab	Organized column grid for flexible layout	Ventilation System	Cooling	Heating	Normal Electrical Service	Tenant Disconnect Switch	Emergency Power	Fire Alarm	Domestic Water	Domestic Hot Water	Sanitary Waste and Ventilation	Grease Waste	Gas
Base Retail Space (un-programmed)	70%	✓	✓	✓	✓	✓	14′– 4″	✓	Air-side economizer, WC exhaust	✓	✓	✓	✓	Lighting only	✓	✓	Instantaneous	Tenant WC, customer WC, food preparation	✗	✗*
Bank	70%	✓	✓	✓	✓	✓	14′– 4″	✓	Minimum code fresh air, WC exhaust	✓	✓	✓	✓	Lighting only	✓	✓	Instantaneous	Tenant WC	✗	✗
Department Store	70%	✓	✓	✓	✓	✓	14′– 4″	✓	Air-side economizer, WC exhaust	✓	✓	✓	✓	Lighting only	✓	✓	Instantaneous	Tenant WC, customer WC	✗	✗
Full-Service Pharmacy	70%	✓	✓	✓	✓	✓	14′– 4″	✓	Air-side economizer, WC exhaust	✓	✓	✓	✓	Lighting only	✓	✓	Instantaneous	Tenant WC	✗	✗
Full-Service Restaurant	70%	✓	✓	✓	✓	✓	14′– 4″	✓	Air-side economizer, kitchen exhaust, WC exhaust	✓	✓	✓	✓	Lighting only	✓	✓	Instantaneous/ storage	Tenant WC, customer WC, food preparation	✓	✓
Furniture & Housewares Store	70%	✓	✓	✓	✓	✓	14′– 4″	✓	Air-side economizer, WC exhaust	✓	✓	✓	✓	Lighting only	✓	✓	Instantaneous	Tenant WC, customer WC	✗	✗
Grocery Store	70%	✓	✓	✓	✓	✓	14′– 4″	✓	Minimum code fresh air, WC exhaust	✓	✓	✓	✓	Lighting only	✓	✓	Instantaneous	Tenant WC	✓	✓
Gym/Fitness Center	70%	✓	✓	✓	✓	✓	14′– 4″	✓	Air-side econ., WC exhaust, shower exhaust, equipment ventilation*	✓	✓	✓	✓	Lighting only	✓	✓	Instantaneous/ storage	Tenant WC, customer WC, shower	✗	✓
Major Drug Store w/ Pharmacy (>10,000 sf)	70%	✓	✓	✓	✓	✓	14′– 4″	✓	Air-side economizer, WC exhaust	✓	✓	✓	✓	Lighting only	✓	✓	Instantaneous	Tenant WC	✗	✗
Office Supply Store	70%	✓	✓	✓	✓	✓	14′– 4″	✓	Air-side economizer, WC exhaust	✓	✓	✓	✓	Lighting only	✓	✓	Instantaneous	Tenant WC, customer WC	✗	✗
Sporting Goods Store	70%	✓	✓	✓	✓	✓	14′– 4″	✓	Air-side economizer, WC exhaust	✓	✓	✓	✓	Lighting only	✓	✓	Instantaneous	Tenant WC, customer WC	✗	✗
Supermarket (>10,000 sf)	70%	✓	✓	✓	✓	✓	14′– 4″	✓	Air-side economizer, kitchen exhaust, WC exhaust	✓	✓	✓	✓	Lighting only	✓	✓	Instantaneous/ storage	Tenant WC, customer WC, food preparation	✓	✓
Community Use: Childcare/Pre-K Center	70%†	✓	✓	✓	✓	✓	14′– 4″	✓	Air-side economizer, kitchen exhaust, WC exhaust	✓	✓	✓	✓	Lighting only	✓	✓	Instantaneous *	Tenant WC, customer WC, equipment	✗	✗
Community Use: Health Facility	70%†	✓	✓	✓	✓	✓	14′– 4″	✓	Minimum code fresh air, WC exhaust	✓	✓	✓	✓	Lighting only	✓	✓	Instantaneous/ storage	Tenant WC, customer WC, equipment	✗	✗
Community Use: Cultural Space	70%†	✓	✓	✓	✓	✓	14′– 4″	✓	Minimum code fresh air, WC exhaust	✓	✓	✓	✓	Lighting only	✓	✓	Instantaneous *	Tenant WC, customer WC, equipment	✗	✗
Art Center	70%	✓	✓	✓	✓	✓	14′– 4″	✓	Minimum code fresh air, WC exhaust	✓	✓	✓	✓	Lighting only	✓	✓	Instantaneous *	Tenant WC, customer WC, equipment	✗	✗
Community Center	70%	✓	✓	✓	✓	✓	14′– 4″	✓	Minimum code fresh air, kitchen exhaust, WC exhaust	✓	✓	✓	✓	Lighting only	✓	✓	Instantaneous/ storage	Tenant WC, customer WC, equipment	✓	✓
Dance Studio	70%†	✓	✓	✓	✓	✓	14′– 4″	✓	Minimum code fresh air, WC exhaust, shower exhaust	✓	✓	✓	✓	Lighting only	✓	✓	Instantaneous/ storage	Tenant WC, customer WC, equipment, shower	✗	✗
Gallery	70%†	✓	✓	✓	✓	✓	14′– 4″	✓	Minimum code fresh air, WC exhaust	✓	✓	✓	✓	Lighting only	✓	✓	Instantaneous	Tenant WC, customer WC, equipment	✗	✗
Performance Space	70%†	✓	✓	✓	✓	✓	14′– 4″	✓	Minimum code fresh air, WC exhaust	✓	✓	✓	✓	Lighting only	✓	✓	Instantaneous	Tenant WC, customer WC, equipment	✗	✗
Religious Facility	70%†	✓	✓	✓	✓	✓	14′– 4″	✓	Minimum code fresh air, WC exhaust*	✓	✓	✓	✓	Lighting only	✓	✓	Instantaneous *	Tenant WC, customer WC, equipment	✗	✗

†These uses may require some additional translucent treatments—see privacy strategies diagram in the Tenant Lease Checklist

*Equipment and product dependent

Sample Configurations of Ground-Floor Retail Tenants

The drawings found on the following pages demonstrate how a typical ground-floor can be arranged to accommodate desirable tenant types.

These layouts each contain a schematic design diagram and a schematic MEP overlay. In Tenant Diagram 1, a single supermarket tenant occupies all retail bays. In Tenant Diagram 2, a full-service pharmacy and restaurant occupy two bays each and a Laundromat is housed in the remaining space. In Tenant Diagram 3, five separate retail tenant-types each occupy a separate bay.

Tenant Diagram 1: Supermarket

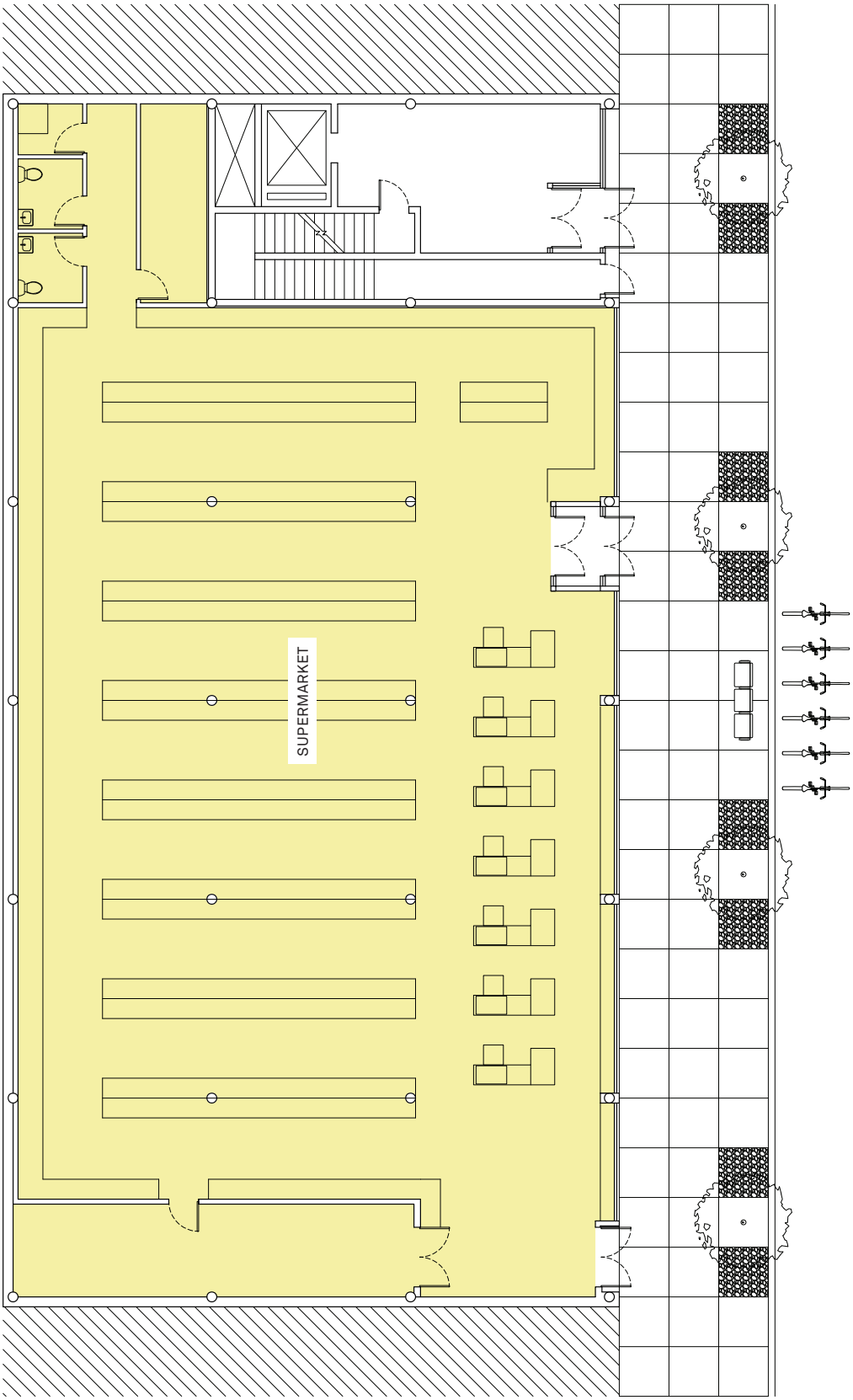

Tenant Diagram 1: Supermarket MEP Option A

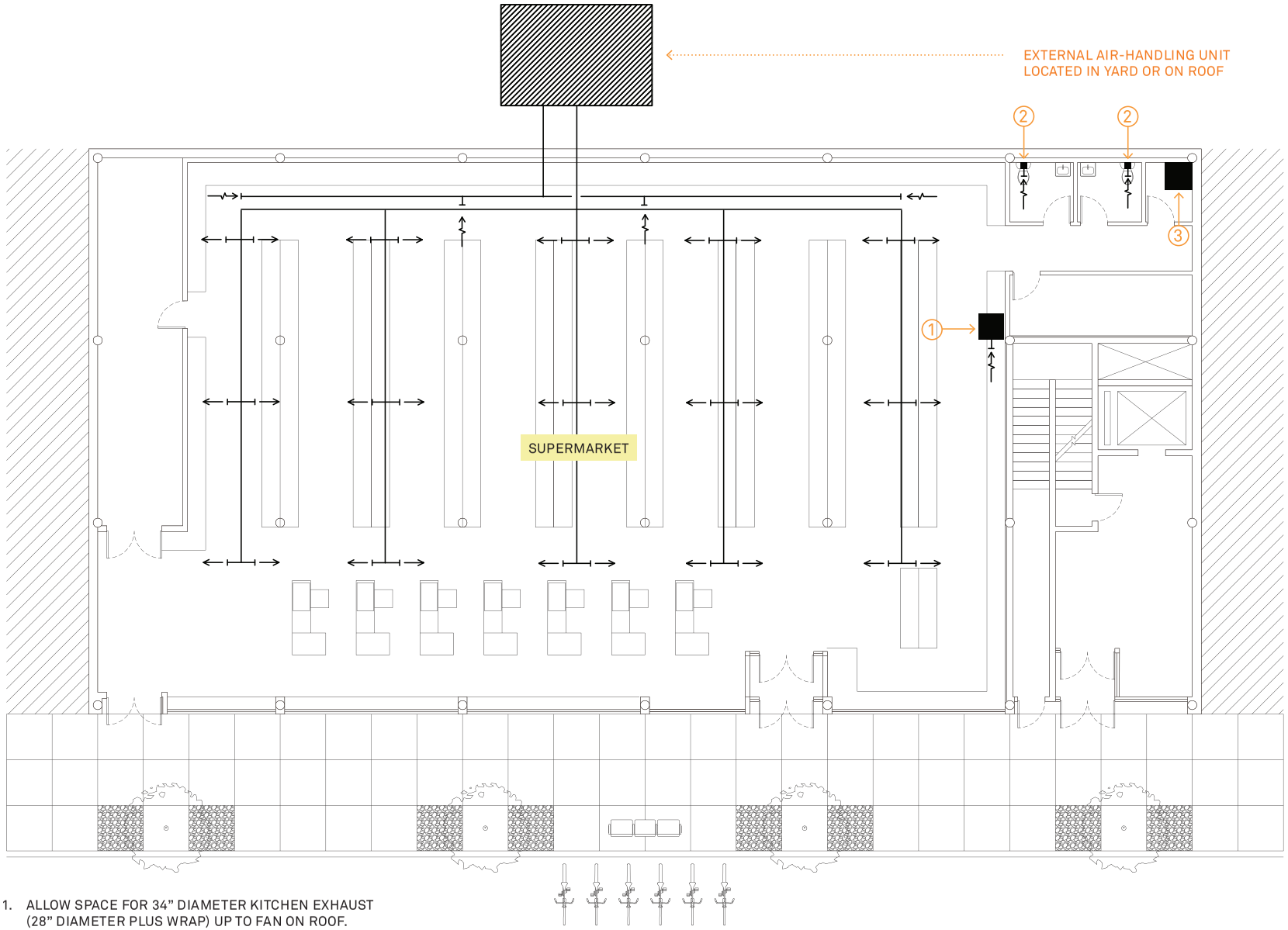

1. ALLOW SPACE FOR 34" DIAMETER KITCHEN EXHAUST (28" DIAMETER PLUS WRAP) UP TO FAN ON ROOF.
2. ALLOW 12"X12" CHASE FOR TOILET EXHAUST TO FAN ON ROOF DUCT CAN SHARE CHASE WITH REFRIGERANT PIPING.
3. ALLOW SPACE FOR 36" DIAMETER WATER HEATER.

Tenant Diagram 1: Supermarket MEP Option B

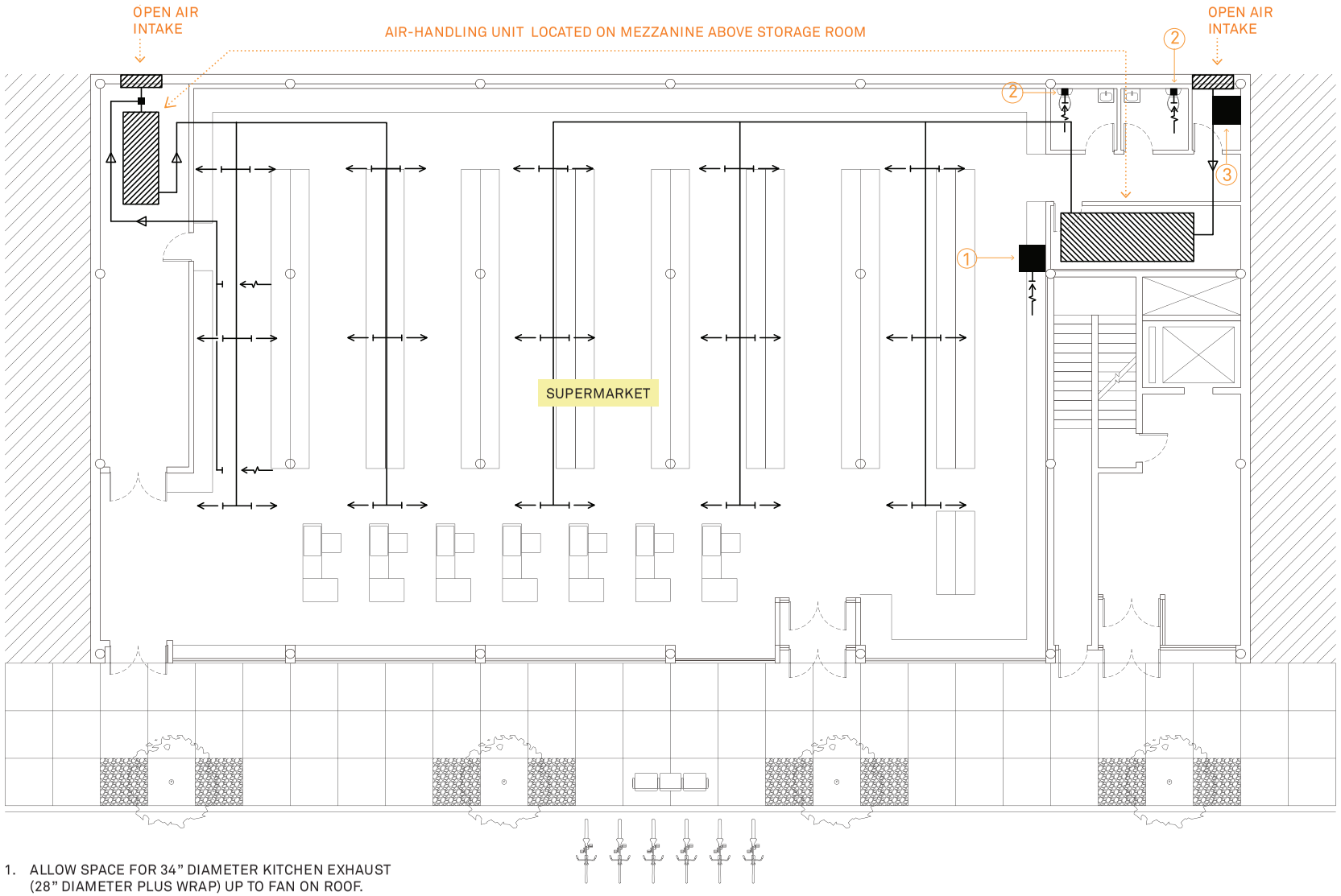

1. ALLOW SPACE FOR 34" DIAMETER KITCHEN EXHAUST (28" DIAMETER PLUS WRAP) UP TO FAN ON ROOF.
2. ALLOW 12"X12" CHASE FOR TOILET EXHAUST TO FAN ON ROOF DUCT CAN SHARE CHASE WITH REFRIGERANT PIPING.
3. ALLOW SPACE FOR 36" DIAMETER WATER HEATER.

Tenant Diagram 2: Three Tenants

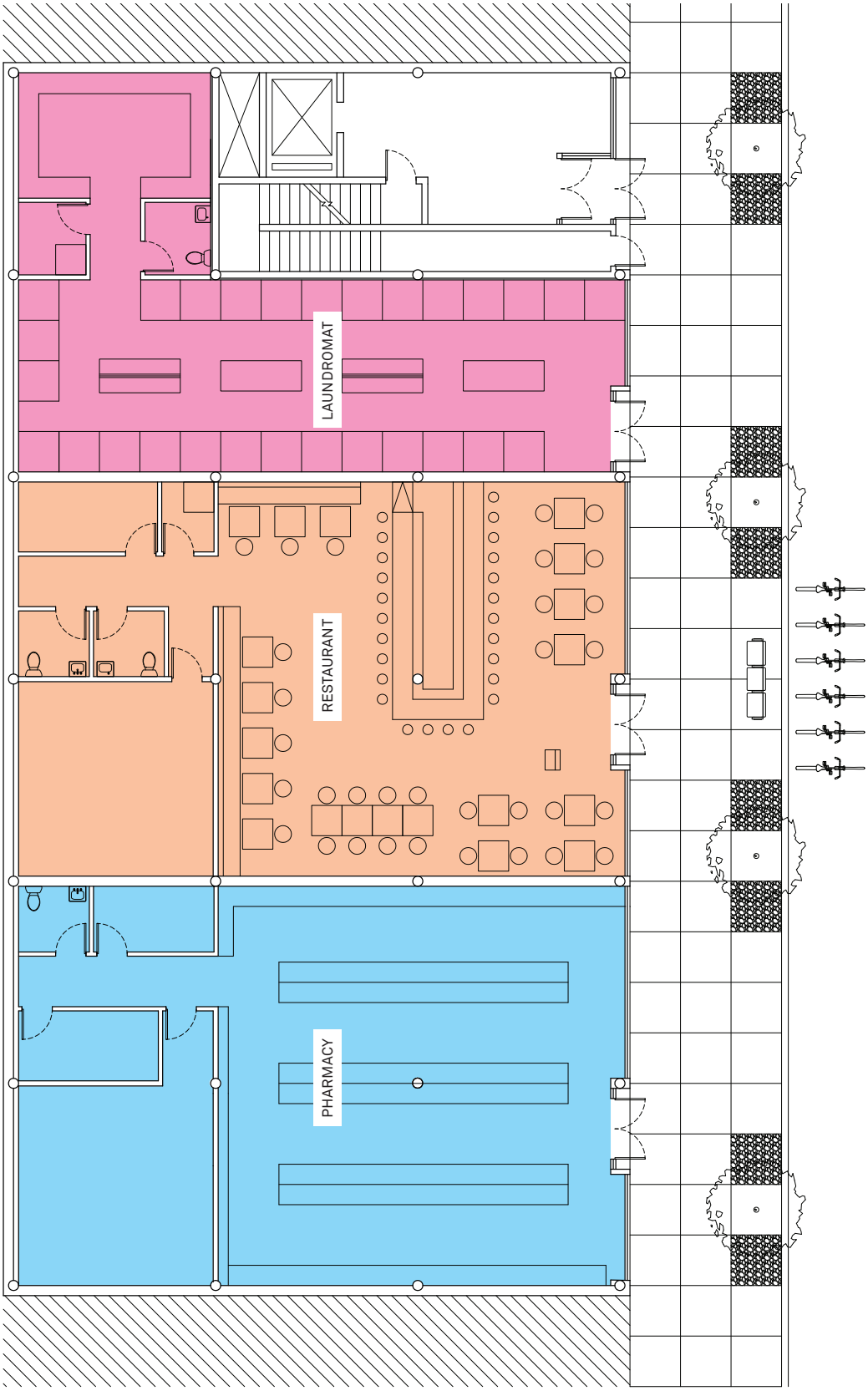

Tenant Diagram 2: Three Tenants MEP

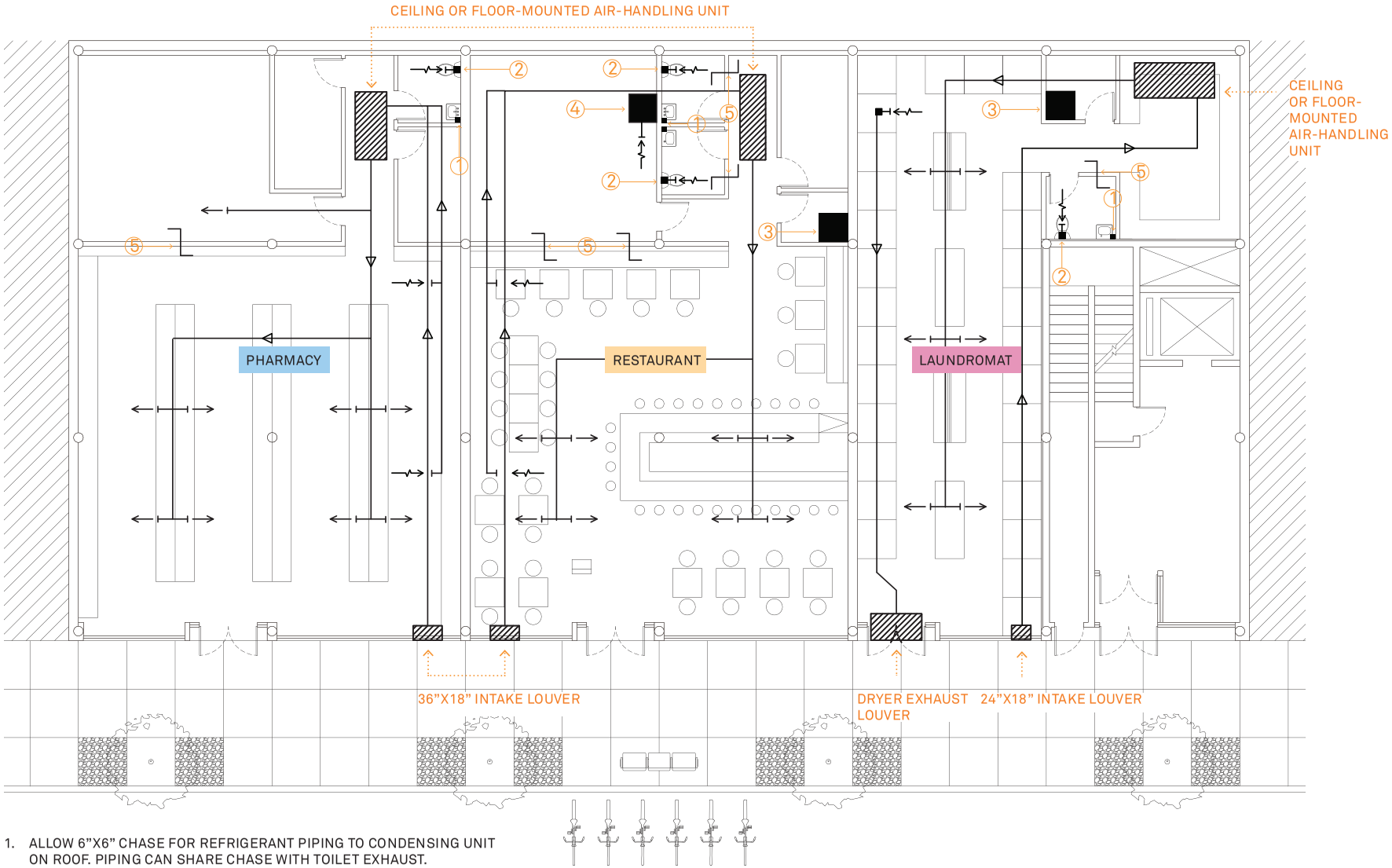

1. ALLOW 6"X6" CHASE FOR REFRIGERANT PIPING TO CONDENSING UNIT ON ROOF. PIPING CAN SHARE CHASE WITH TOILET EXHAUST.
2. ALLOW 12"X12" CHASE FOR TOILET EXHAUST TO FAN ON ROOF. DUCT CAN SHARE CHASE WITH REFRIGERANT PIPING.
3. ALLOW SPACE FOR 36" DIAMETER WATER HEATER.
4. ALLOW SPACE FOR 34" DIAMETER KITCHEN EXHAUST DUCT (28" DIAMETER PLUS WRAP) UP TO ROOF.

Tenant Diagram 3: Five Tenants

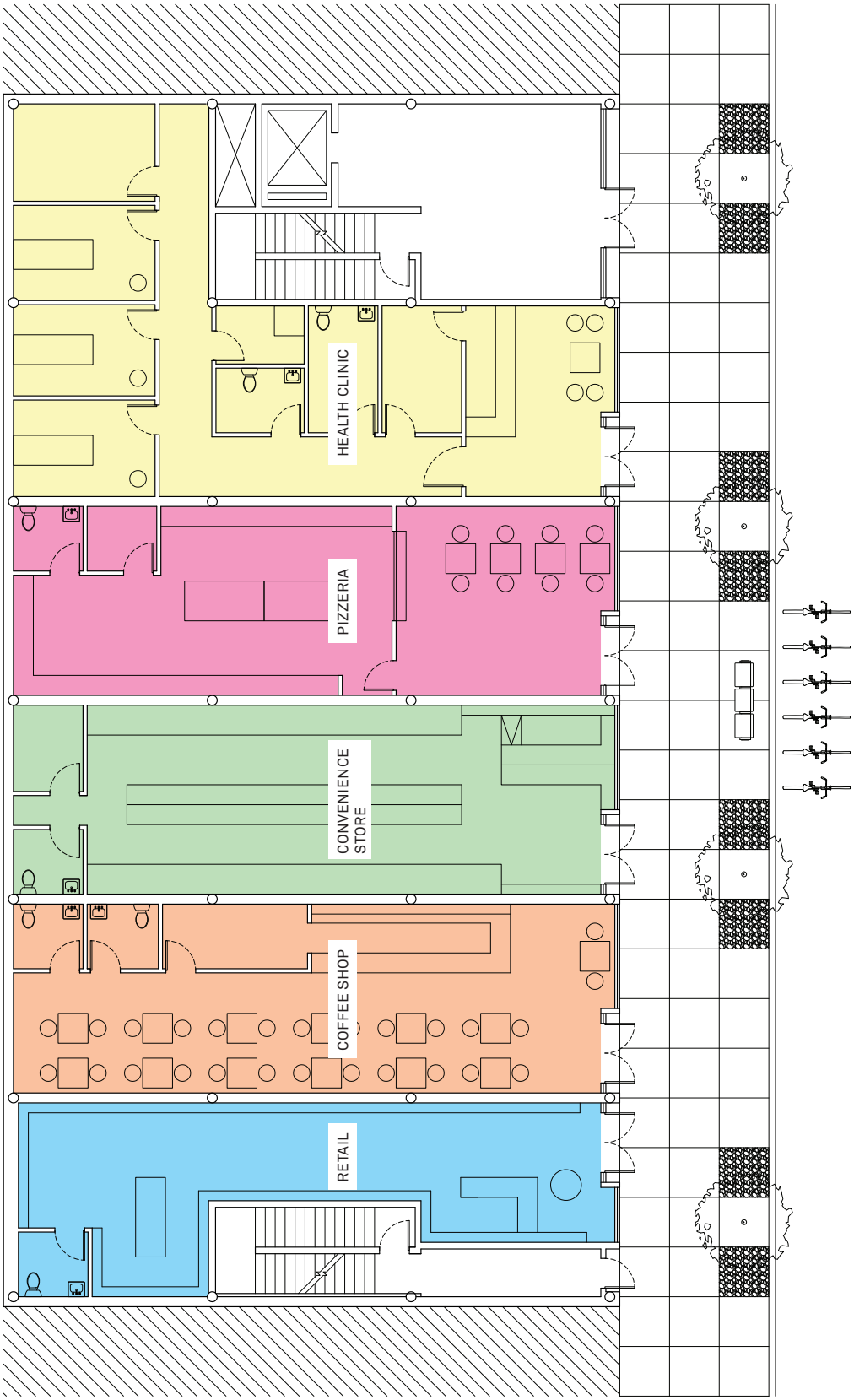

Tenant Diagram 3: Five Tenants MEP

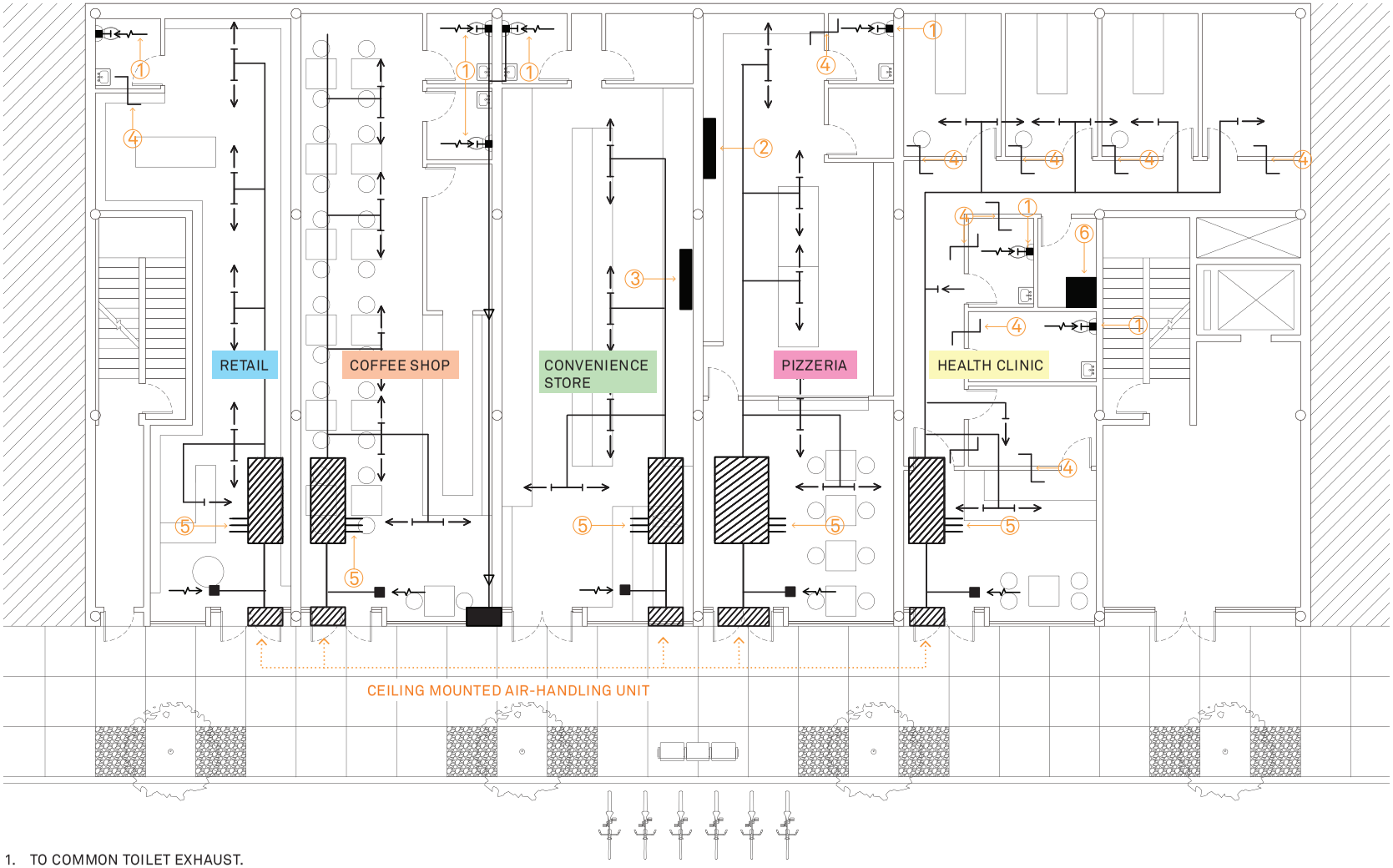

1. TO COMMON TOILET EXHAUST.
2. TO DEDICATED KITCHEN EXHAUST FAN THROUGH RISER. POSSIBLY PROVIDE DEDICATED MAKE UP AIR UNIT TO BE DUCTED.
3. TO DEDICATED KITCHEN EXHAUST FAN THROUGH EXHAUST RISER (APPLICABLE IF COOKING SURFACE PROVIDED).
4. PROVIDE RETURN AIR PATH BACK TO UNIT FOR ANY FULL HEIGHT WALLS, AS REQUIRED.
5 REFRIGERANT / CHS / HWS / R / STEAM / CWS / R PIPING THROUGH PIPING CHASE TO ASSOCIATED EQUIPMENT (DEPENDING ON TYPE OF UNIT SELECTED).
6. ALLOW SPACE FOR 36" DIAMETER WATER HEATER.

Tenant Lease Checklist

Developers may use this checklist to modify standard leases to ensure that their tenants comply with the design guidelines.

SECTION 1

Facade and Signage

1.1 Glazing/Fenestration

.1 Maintain 70% transparency on exterior glazing between 2 feet and 10 feet above the sidewalk. Do not paste stickers, posters, or fliers that exceed 70% transparency. When privacy is needed for specific uses refer to this diagram.

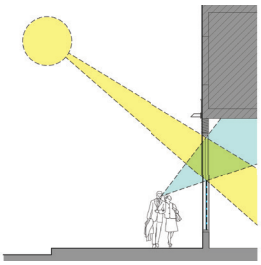

FROSTED SCREENING, BLINDS, OR CURTAINS SET AT A HEIGHT TO OBSCURE EXTERIOR VIEWS INTO THE SPACE, WHILE ALLOWING DIRECT SUN AND INTERIOR VIEWS OF THE SKY.

1.3 Louvers

.4 Do not install air-conditioning units over doorways or allow them to protrude through the facade.

1.4 Signage

.2 Maintain uniform signage across the length of the street front facade, creating a signage band above the storefront.

.4 Ensure that signage lighting minimizes light pollution and does not illuminate residential interiors located above the sign.

1.5 Awnings

.2 Awnings should maintain a uniform profile, projection, height, color, and material palette across the entire facade. Awning size/spacing should be coordinated with facade bays and with all retail tenant awnings. Branding for each retailer can be customized within these unifying limitations.

.3 Install awnings with open ends and bottoms to maintain a clean and light appearance. Front lips are recommended, but should not exceed 1 foot in depth.

.4 Install stainless steel awning supports and fasteners to prevent rusting.

.5 Maintain awnings according to standards of care. Awnings should be clean and fully functional at all times.

1.6 Exterior Lighting

.1 Ensure that interior lighting is not obstructed or otherwise prevented from effectively reaching the exterior.

1.7 Security Gates

.1 If security gates are required, provide internally housed roll-down security grilles mounted on the interior of the storefront. These gates roll down inside of the display window and door.

.2 Install open mesh security grilles only, in order to maintain transparency. Solid sections may be provided if they align with opaque portions of the facade. The minimum visibility allowed is 70%. More visibility is desirable.

.3 Prevent security grilles from obscuring or detracting from the design and details of the existing storefront.

.4 Coordinate the location of security grilles so they do not interfere with exterior louvers. The security gate should not impede the visual connection from the interior to the exterior. Coordinate the location of the security grilles with the required mechanical space behind the exterior louvers prior to installation.

SECTION 2

Exterior Access & Streetscape

2.3 Recycling and Trash Disposal Area

.1 Locate recycling bins and trash collection area out of view from sidewalk and main building entrances. At least three days' worth of garbage should be able to be stored within the interior or a designated off-street location.

2.10 Exterior Power

.1 Ensure that exterior power outlets are properly secured at all times.

SECTION 3

Interior Architecture

3.1 Ceiling Height

.2 Maintain a clear span of 12 feet above the finish floor (AFFL). No pipe, conduit or other utility running horizontally in the ceiling should be lower than 12 feet above the retail floor slab.

SECTION 4

Mechanical

4.5 Exhaust Air

.1 Ensure that the location of exhaust air openings is compatible with the NYC Building Code. In general, exhaust air louvers are located 10 feet above the sidewalk, 10 feet from any window in an adjacent building and 10 feet from a residential window in the same building. If the exhaust is considered to be a contaminant source it must be located 20 feet from the nearest intake (or be at least 2 feet above it).

SECTION 6

Plumbing and Fire Protection

6.4 Grease Waste

.2 Maintain all grease traps and interceptors for their continued functionality. Fixed furniture or stored materials should not block access. A professional should carry out maintenance regularly.

6.5 Gas

.2 Arrange for a gas meter to be installed by the gas utility company.

Glossary

AHU
Air-handling unit, an acronym for the mechanical unit that provides air to the building.

Awning
A roof-like covering, often constructed of fabric, which extends over the storefront; awnings shelter people from the elements and provide shade for the interior.

Backflow Preventer
A device designed to prevent water from flowing back into a building's plumbing system.

Bioswale
A landscape element designed to capture and filter stormwater runoff.

Block and Plank
A type of construction that uses precast concrete slabs or "planks" for the floor system of a building and concrete masonry units (CMUs) for the bearing walls.

BLDS
Building and Land Development Services, a division within the NYC Department of Housing Preservation and Development (HPD) that provides environmental, architectural, engineering, and construction support services to HPD projects.

Building Entrance
Primary building entrance that provides access to upper-story retail, commercial, or residential tenants.

Building Facade
For the purposes of these design guidelines, the street face of the building above the storefront, or the upper facade of the building.

Bulkhead
The horizontal part of the storefront starting from the ground to the bottom or sill of the display window.

Brickmold
The exterior molding at the joint between the window frame and the masonry opening, typically forming a part of the window enframement.

cfm
Cubic feet per minute, a unit of volume commonly used to measure HVAC system capacity.

cfm/sf
Cubic feet per minute per square foot, a unit of measurement used to evaluate the efficiency of an HVAC system.

Column Bay
The space between two rows of columns.

Contaminant Source
A point or location that emits unhealthy chemicals or organic matter.

Cornice
The horizontal, exterior trim or feature of a building at the meeting of the roof and the building facade.

CSO
Combined Sewer overflow. A discharge from the city's combined sewer system that occurs when heavy rainfall taxes the system beyond the capacity of wastewater treatment plants. CSOs deposit both wastewater and stormwater into the city's natural waterways and are harmful to the environment.

CSO Tributary Area
The geographic area a certain combined sewer serves. Specific tributary areas may be targeted in order to increase natural water filtration and limit the use of the combined sewer during a storm event.

Curtain Wall Facade
An exterior building wall that is non-load-bearing.

DEP
Department of Environmental Protection, a division of the New York City government that manages the city's water supply.

DX
Direct expansion cooling system, an HVAC technology that uses the refrigerant vapor expansion/compression cycle to cool the building. DX systems take up less room than traditional HVAC systems and have lower noise levels.

DOT
NYC Department of Transportation, a division of the New York City government that has jurisdiction over streets, sidewalks, and other transportation infrastructure.

Display Window
Large area of transparent plate glass in the storefront infill that provides space for product and service display as well as visibility into the store.

Energy Code
Standards developed by local, state, or federal governments that detail the energy-efficiency requirements of new buildings. In New York City, the applicable energy code can be found at: http://www.nyc.gov/html/dob/html/codes_and_reference_materials/nycecc_main.shtml

Enframement

The decorative trim, moldings, or molded projections around the top and sides of a window or door opening.

Facade Signage

Signage, often located above the building entrance or on the cornice, which may be engraved in the building masonry or otherwise constructed of masonry or metal and installed on the facade. Facade signage is typically an original element in the building design.

Fascia Band

A flat, horizontal member or molding with little projection, separating elements of the facade.

FEMA

Federal Emergency Management Agency, a governmental agency within the Department of Homeland Security that coordinates the federal response to natural disasters.

Glazing

The glass surface of a window, door opening, or wall.

Historic Fabric

Any building element that is part of the original construction of a historic building.

HPD

NYC Department of Housing Preservation and Development, an agency of the New York City government that works to develop and preserve affordable housing.

HVAC

Heating, ventilation, and air conditioning. An acronym used as shorthand for the air systems of a building.

Instantaneous Water Heaters

Gas-powered modules which heat water instantly without a tank.

Large Retail Unit

A retail unit greater than or equal to 4,000 square feet in floor area.

LEED

Leadership in Energy & Environmental Design, a green building certification program that recognizes best-in-class building strategies and practices.

Light Pollution

Excessive, misdirected, or obtrusive artificial light, typically at night. Also known as photo-pollution or luminous pollution.

Lintel

A horizontal structural member, such as a beam, over an opening which carries the weight of the wall above it.

Louvers

A screen composed of horizontal slats for admitting air and screening views of an air-conditioning unit, housed in a framed opening often located in the signage zone or bulkheads.

MEP

Mechanical, electrical, and plumbing, an acronym used as shorthand for the working systems of a building.

NYSERDA

New York State Energy Research and Development Authority, a public benefit corporation that promotes energy efficiency and the use of renewable energy sources. NYSERDA works with residents, business owners, developers, community leaders, local government officials, university researchers, utility representatives, investors, and entrepreneurs.

Parapet

The extension of the building facade wall above the building's roofline.

Pier

A vertical column that projects from, and is an integral part of, a wall. Usually rectangular in section and placed at intervals along the wall for support.

Pilaster

A pier or pillar attached to a building's facade, which often contains a base, shaft, and capital, and supports a horizontal band above.

Security Gates and Grilles

Apparatus for securing windows and doors consisting of a retractable metal sash that is either solid metal (gate) or open mesh (grille), and, in the case of overhead rolling types, an overhead metal box where the gate or grille stays when retracted. The gate or grille is installed on the interior or exterior side of windows and doors.

Security Grille or Gate Housing

The part of the rolling security grille or gate that contains the grille or gate when rolled up.

sf

Square feet, a common unit of measurement for building area.

Signage Zone

A continuous zone appropriate for placing signage immediately above the storefront glazing, often stretching the full length of the storefront or storefront infill, or within the display window area. Signs may be installed only within the signage zone.

Small Retail Unit

A retail unit less than 4,000 square feet in floor area.

Sprinkler Service

A fire protection system composed of pipes and nozzles that automatically release water in the event of a fire.

Standpipe System

A pipe system that connects a water supply with strategically placed hose connections for use by either the building's occupants or the fire department.

Storefront

Retail or commercial face of building at street level, typically articulated and distinct from the rest of the building face, reflecting its use, and which may extend up to the second floor. The storefront is often architecturally terminated by a storefront cornice.

Storefront Cornice

A continuous horizontal fascia band with projecting moldings above the storefront that visually separates the storefront from the upper or building facade.

Storefront Entrance

Entrances to individual ground-floor retail and other commercial spaces; entrances are typically coordinated with the design of other storefront components.

Storefront Infill

The area within the masonry opening of the street level facade that provides access and natural daylight into retail or other commercial spaces. Typically, the storefront infill includes large areas of plate glass for display and visibility. The storefront is defined by a cornice or lintel at the top, a bulkhead at the base, and by piers or pilasters at the sides. Doors and transoms are located within the storefront infill area.

Storefront Lighting

Artificial light sources used inside display windows and on the exterior of the building to illuminate product displays, signage, or the storefront as a whole.

Transom

A framed area of glass above a door opening, separated by a transom bar.

Vestibule

A hall or lobby indent adjacent to the front door of a building.

VRF

Variable refrigerant flow system, an HVAC technology that uses refrigerant for both cooling and heating. If used properly, VRF systems can provide significant energy savings.

Acknowledgments

Project Participants

Laying the Groundwork Fellows

Fiona Cousins
ENGINEERING FELLOW

Fiona Cousins, PE, CEng, LEED Fellow, is a principal in the New York office of Arup, where she leads the sustainability team and is one of the leaders of the Buildings Practice. She has worked for both corporate and institutional clients on a wide variety of building, planning, and sustainability projects including museums, galleries, archives, trading floors, laboratories, libraries, performing art centers, energy master plans, and campuses. Fiona has been named chair-elect by the US Green Building Council (USGBC) board of directors. She holds degrees in engineering science and interdisciplinary design for the built environment from the University of Cambridge and has spent her career engaged in HVAC design and sustainability.

Penny Hardy
GRAPHIC DESIGN FELLOW

Penny Hardy is the founding principal of PS New York. Established in 2004, PS New York is a creative agency specializing in brand identity, interactive, and print solutions. The firm has a diverse and extensive client base within the architectural/design, retail and cultural communities. Recent clients include the AIA New York, Center for Architecture, Smithsonian Archives of American Art, and Open House New York. Her work has been published and awarded by the AIGA, Print, Communication Arts, Output, and BitxBit. Penny has an MFA in design from Yale University, where she was awarded the Bradbury Thompson prize.

Hayes and James Slade
ARCHITECTURE FELLOWS

Hayes Slade AIA, IIDA, and James Slade AIA, IIDA, LEED-AP, cofounded Slade Architecture in 2002. Their work has been exhibited at MoMA, the National Building Museum, Deutsches Architekturmuseum, the Swiss Institute, the Architecture League of New York, AIA Center for Architecture, the Venice Biennale, and other venues. Slade Architecture has received numerous honors for their designs, including awards from the Retail Design Institute and the Association for Retail Environments. Hayes is a licensed architect with a BS and master's in structural engineering from Cornell and an MBA from Wharton, and James has a BA from Cornell University and a MArch from Columbia University.

Design Trust Staff

Megan Canning
DEPUTY DIRECTOR (FORMER)

Susan Chin, FAIA, Hon. ASLA
EXECUTIVE DIRECTOR

Rosamond Fletcher
DIRECTOR OF PROGRAMS

Ozgur Gungor
COMMUNICATIONS MANAGER

Joseph Huennekens
PROGRAM ASSOCIATE

Kelly Mullaney
DEVELOPMENT MANAGER

Caroline Bauer
PROGRAM MANAGER (FORMER)

NYC Department of Housing Preservation and Development Staff

Brian Baldor
DIRECTOR OF DESIGN CONSULTATIONS AND STRATEGIES, BUILDING AND LAND DEVELOPMENT SERVICES

Jonathan Beuttler
DIRECTOR OF MIXED-INCOME PROGRAMS, NEW CONSTRUCTION FINANCE

Leila Bozorg
CHIEF OF STAFF, COMMISSIONER

Tom Cavallo
DEPUTY DIRECTOR OF MECHANICAL ENGINEERING, BUILDING AND LAND DEVELOPMENT SERVICES

Shampa Chanda
DIRECTOR, QUEENS AND STATEN ISLAND PLANNING AND PREDEVELOPMENT (FORMER)

Sara Dabbs
EXECUTIVE DIRECTOR, MULTIFAMILY NEW CONSTRUCTION PROGRAMS

Andrew Eickmann
EXECUTIVE DIRECTOR, PREDEVELOPMENT AND NEIGHBORHOOD PLANNING

Eric Enderlin
DEPUTY COMMISSIONER/SPECIAL ADVISOR, DEVELOPMENT

John Gearrity
ASSISTANT COMMISSIONER, BUILDING AND LAND DEVELOPMENT SERVICES

Arielle Goldberg
SENIOR PLANNER/POLICY ANALYST, PLANNING AND PREDEVELOPMENT

Elizabeth Greenstein
DIRECTOR OF EXTERNAL AFFAIRS

Jack Hammer
DIRECTOR, BROOKLYN PLANNING, PLANNING AND PREDEVELOPMENT (FORMER)

Daniel Hernandez
DEPUTY COMMISSIONER, NEIGHBORHOOD STRATEGIES

Patrick Hess
CHIEF OF STAFF, DEVELOPMENT

Joanna Kandel
PROJECT MANAGER, NEW CONSTRUCTION FINANCE

Greg Kelly
SENIOR BUSINESS ANALYST, TECHNOLOGY AND STRATEGIC DEVELOPMENT

Susan Kensky
ASSISTANT COMMISSIONER, NEW CONSTRUCTION FINANCE

Elizabeth Seward
DIRECTOR, PIPELINE PLANNING, PLANNING AND PREDEVELOPMENT (FORMER)

Eunice Suh
DIRECTOR, PREDEVELOPMENT PLANNING, PLANNING AND PREDEVELOPMENT

Ted Weinstein
DIRECTOR, BRONX PLANNING, PLANNING AND PREDEVELOPMENT

Eric Wilson
ASSISTANT COMMISSIONER, PLANNING AND PREDEVELOPMENT

Julia Zasedatel
DEPUTY DIRECTOR OF COST EVALUATION AND CHANGE ORDERS, BUILDING AND LAND DEVELOPMENT SERVICES

Lin Zeng
DIRECTOR, BROOKLYN PLANNING, PLANNING AND PREDEVELOPMENT

Stakeholder Workshops and Peer Review

Eva Alligood
LOCAL INITIATIVES SUPPORT CORPORATION (LISC)

Laure Aubuchon
SAUGATUCK COMMERCIAL REAL ESTATE

M. Blaise Backer
NYC DEPARTMENT OF SMALL BUSINESS SERVICES

Ellen Baer
HUDSON SQUARE CONNECTION

Matthew A. Bauer
MADISON AVENUE BID

Carmi Bee
RKTB ARCHITECTS

G. Lamont Blackstone
G.L. BLACKSTONE & ASSOCIATES

Ralph Blessing
NYC DEPARTMENT OF CITY PLANNING

Viren Brahmbhatt
DE.SIGN STUDIO

Shawn Brede
NYC DEPARTMENT OF CITY PLANNING

Calvin Brown
NYC DEPARTMENT OF CITY PLANNING

Laurel Brown
DOWNTOWN BROOKLYN PARTNERSHIP

Noel Caban
WINICK REALTY

Jodi Callender
NYC ECONOMIC DEVELOPMENT CORPORATION (FORMER)

Patrick Cammack
NYC DEPARTMENT OF SMALL BUSINESS SERVICES (FORMER)

Amber Christoffersen
ENTERPRISE COMMUNITY PARTNERS

R. Darby Curtis
CURTIS + GINSBERG ARCHITECTS

Barry Dinerstein
NYC DEPARTMENT OF CITY PLANNING

Bruce Eisenberg
NYCHA

Karen Fairbanks
MARBLE FAIRBANKS

Reese Fayde
REESE FAYDE ASSOCIATES

Colleen Flynn
LOCAL INITIATIVES SUPPORT CORPORATION (LISC)

Dana Frankel
LONG ISLAND CITY PARTNERSHIP (FORMER)

Namon Freeman
NYC DEPARTMENT OF TRANSPORTATION

Mark Ginsberg
CURTIS + GINSBERG ARCHITECTS

Erick Gregory
NYC DEPARTMENT OF CITY PLANNING

Lindsay Haddix
NYCHA (FORMER)

Chris Hayner
NYC DEPARTMENT OF CITY PLANNING

Terra Ishee
NYC DEPARTMENT OF TRANSPORTATION

Lee Jaffe
CYPRESS HILLS LOCAL DEVELOPMENT CORPORATION

James Johnson-Piett
URBANE DEVELOPMENT

Tawkiyah Jordan
NYC DEPARTMENT OF CITY PLANNING

Bomee Jung
ENTERPRISE COMMUNITY PARTNERS (FORMER)

Aaron Koffman
HUDSON

Emily Kurtz
RBSCC

Michael Lambert
BEDFORD-STUYVESANT GATEWAY BID AND NYC BID ASSOCIATION

Frank Lang
ST. NICKS ALLIANCE

Russell Lang
DOUGLASTON DEVELOPMENT

Charles Laven
FORSYTH STREET

Burton Leon
NYCHA

Nick Magilton
NYC DEPARTMENT OF TRANSPORTATION

Kerry A. McLean
WHEDCO

Sam Marks
LOCAL INITIATIVES SUPPORT CORPORATION (LISC)

Vineeta Mathur
NYC DEPARTMENT OF CITY PLANNING

Justin Garrett Moore
NYC DEPARTMENT OF CITY PLANNING

Daniel Murphy
PITKIN AVENUE BID

Cathy Nonas
NYC DEPARTMENT OF HEALTH AND MENTAL HYGIENE

Larisa Ortiz
LARISA ORTIZ ASSOCIATES

Robert Puddicombe
RELATED

Chad Purkey
MYRTLE AVENUE BROOKLYN PARTNERSHIP

Barbara Blair Randall
GARMENT DISTRICT ALLIANCE

Mary Serafy
BRP

Scott Short
RBSCC

Jeffrey Shumaker
NYC DEPARTMENT OF CITY PLANNING

Abby Sigal
ENTERPRISE COMMUNITY PARTNERS (FORMER)

Leia Sims
ENTERPRISE COMMUNITY PARTNERS

Howard Slatkin
NYC DEPARTMENT OF CITY PLANNING

Laura Smith
NYC DEPARTMENT OF CITY PLANNING

Thomas Smith
NYC DEPARTMENT OF CITY PLANNING

Ismene Speliotis
MHANY

J. Josef Szende
ATLANTIC AVENUE BID

Karina Totah
NYCHA

Winston Von Engel
NYC DEPARTMENT OF CITY PLANNING

Christina Warner
L+M DEVELOPMENT PARTNERS

Elisabeth Wooten
NYC DEPARTMENT OF TRANSPORTATION

Kiyoshi Yamazaki
NYC DEPARTMENT OF CITY PLANNING

John Young
NYC DEPARTMENT OF CITY PLANNING

Thomas Yu
ASIAN AMERICANS FOR EQUALITY

The Energetic City Advisory Committee

The Design Trust formed the Energetic City Advisory Committee to provide advice on projects selected from our 2014 RFP, including **Laying the Groundwork**.

M. Blaise Backer
NYC DEPARTMENT OF SMALL BUSINESS SERVICES

Robert Balder
CORNELL UNIVERSITY AAP

Theodore S. Berger
DESIGN TRUST FOR PUBLIC SPACE BOARD AND JOAN MITCHELL FUND

R. Darby Curtis
DESIGN TRUST FOR PUBLIC SPACE BOARD AND CURTIS + GINSBERG

Ann Harakawa
DESIGN TRUST FOR PUBLIC SPACE BOARD AND TWO TWELVE

Natalie Jeremijenko
XDESIGN ENVIRONMENTAL HEALTH CLINIC AT NYU

Zack McKown
DESIGN TRUST FOR PUBLIC SPACE BOARD AND TSAO & MCKOWN

Jeff Merritt
MAYOR'S OFFICE OF TECHNOLOGY AND INNOVATION

Larisa Ortiz
LARISA ORTIZ ASSOCIATES

Nancy Prince
NYC DEPARTMENT OF PARKS AND RECREATION

Damon Rich
HECTOR DESIGN SERVICE

Edwin Torres
NYC DEPARTMENT OF CULTURAL AFFAIRS

Ruth Anne Visnauskas
NYS HOMES AND COMMUNITY RENEWAL

Andrea Woodner
FOUNDER AND BOARD PRESIDENT DESIGN TRUST FOR PUBLIC SPACE

Additional Thanks

Connie Chan
NYC DEPARTMENT OF CITY PLANNING

Vivi Feng
PS NEW YORK

Adam Finkin
ARUP

Alan Glynn
ARUP

David Iseri
SLADE ARCHITECTURE

Mark Leskovec
SLADE ARCHITECTURE

Eric Miller
ARUP

Carl Mister
ARUP

Anthony Nyugen
PS NEW YORK

Emily Puhnaty
SLADE ARCHITECTURE

Raymond Quinn
ARUP

Robb Risani
ARUP

Nice Warisara Sudswong
SLADE ARCHITECTURE

Dana Wall
DESIGN TRUST INTERN

Laying the Groundwork is made possible in part by generous support from

ART WORKS.

National Endowment for the Arts
arts.gov

ARUP

Project funding is also provided by the Design Trust Founder's Circle, including Agnes Gund, Kitty Hawks, Sophia W. Healy, the Lily Auchincloss Foundation, Camila Pastor & Stephen Maharam, and Kelly Posner.

Additional support is provided by the New York State Council on the Arts and public funds from the New York City Department of Cultural Affairs, in partnership with the City Council.

APPENDIX I:
2015 Enterprise Green Communities Criteria Certification Overlay for NYC HPD Projects

2015 Enterprise Green Communities Criteria
Certification Overlay for NYC HPD Projects - August 2015

This document summarizes HPD's modifications and clarifications to the 2015 Enterprise Green Communities Criteria and Certification process for projects in New York City. For detailed technical guidance, please refer to the full 2015 Enterprise Green Communities Criteria: http://www.enterprisecommunity.org/green

Projects financed by HPD and required to achieve Enterprise Green Communities Certification must:

- Provide documentation that the project architect, general contractor, and developer have attended a "Green Communities Healthy Homes Training" conducted by the New York City Department of Health and Mental Hygiene (DOHMH),
- Follow the HPD Overlay guidance as outlined in the checklist below,
- Meet all mandatory measures applicable for the construction type, and
- Achieve a minimum of 35 optional points if new construction; achieve a minimum of 30 optional points if rehabilitation

At all times, projects are encouraged to go beyond this minimum set of criteria to meet the development goals of the project.

Process

Prior to completing the PreBuild application for Green Communities Certification, the project architect, general contractor, and developer must attend a "Green Communities Healthy Homes Training" conducted by DOHMH. This is a free two hour seminar which focuses on best practices in healthy housing topics for NYC buildings, including Integrated Pest Management, Active Design, and Smoke Free Housing. DOHMH will issue a certificate of completion to each participant at the conclusion of the training; this certificate of completion will be valid for those individual training participants for a period of three years. For each project submitted to HPD, the project architect, general contractor, and developer must submit a copy of their certificate of training completion to HPD's Director of Sustainability, along with the "Notification of Application Submission" form. Once all required documentation is submitted, HPD's Director of Sustainability will issue a Confirmation Letter for the project to the project team. The HPD Confirmation Letter will be required to complete your PreBuild application in the online Green Communities Certification Portal.

Enterprise Green Communities Certification is a two-step process (PreBuild and PostBuild) housed within the online Green Communities Certification Portal (www.enterprisecommunity.org/green). Application submittals will be reviewed in 30 days or less. After the review period, project teams will either receive a request for additional information or a notice that their application was approved. Note that if additional information is requested for review and the project team subsequently resubmits their PreBuild or PostBuild application, these will also be subject to a 30 day review period.

PreBuild application submittals due at least 30 days before start of construction. A $1,250 fee will be assessed through the online portal for the initial PreBuild review. Projects must upload the Confirmation Letter received from the HPD Director of Sustainability as part of their PreBuild submission.

PostBuild application submittals are due within 60 days of construction completion (within 60 days of the project receiving its certificate of occupancy). A $300 fee will be assessed through the online portal for the initial PostBuild review.

Requests for expedited reviews may be available. Expedited submittals will be reviewed in 10 business days or less. Each expedited review requests will be assessed an additional $250 fee.

M = MANDATORY
# = OPTIONAL POINTS

1. INTEGRATIVE DESIGN

○ YES ○ NO ○ MAYBE M

1.1a Goal Setting

Develop an integrative design process that works best for your project team and intentions. At minimum, document:

1. A statement of the overall green development goals of the project and the expected intended outcomes from addressing those goals.
2. A summary of the integrative process that was used to select the green building strategies, systems and materials that will be incorporated into the project.
3. A description of how progress and success against these goals will be measured throughout the completion of design, construction and operation to ensure that the green features are included and correctly installed.

○ YES ○ NO ○ MAYBE M

1.1b Criteria Documentation

Create design and construction documentation to include information on implementation of appropriate Enterprise Green Communities Criteria.

○ YES ○ NO ○ MAYBE 9

1.1c Designing for Project Performance

Identify how the expected performance of your project compares to the actual performance of other projects in your portfolio and/or community.

HPD Overlay:
Note that the metrics used to evaluate performance must be consistent from project to project in order to ensure accuracy. Square footage of conditioned space that will be used to define BTU/SF/HDD, for instance, should be defined per Local Law 84's definition of gross floor area and derived either from measurements or from architectural plans rather than from the Department of Finance gross square footage figures.

○ YES ○ NO ○ MAYBE M

1.2a Resident Health and Well-Being: Design for Health

Identify potential resident health factors and design your project to address resident health and well-being by using the matrix provided on pages 22 and 23.

○ YES ○ NO ○ MAYBE 12

1.2b Resident Health and Well-Being: Health Action Plan

At pre-design and continuing throughout the project life cycle, collaborate with public health professionals and community stakeholders to assess, identify, implement and monitor achievable actions to enhance health-promoting features of the project and minimize features that could present health risks. Specifically, create a Health Action Plan and integrate the selected interventions and a plan for monitoring and evaluating progress per the full criterion.

○ YES ○ NO ○ MAYBE M

1.3a Resilient Communities: Design for Resilience *(New Construction and Substantial Rehab only)*

Given your project building type, location and expected resident population, identify a project characteristic that would most likely impact your project's ability to withstand an unexpected weather event or loss of power. Select at least one criterion from the given list that would help mitigate that impact, and incorporate this within your project plans and design. Include a short narrative providing your rationale for selecting this criterion above the others.

○ YES ○ NO ○ MAYBE 15

1.3b Resilient Communities: Multi-Hazard Risk / Vulnerability Assessment

Carry out a Vulnerabilities Assessment and implement building elements designed to enable the project to adapt to, and mitigate, climate impacts given the project location, building/construction type and resident population.

SUBTOTAL OPTIONAL POINTS

M = MANDATORY
# = OPTIONAL POINTS

2. LOCATION + NEIGHOBORHOOD FABRIC

New Construction: All new construction projects must earn optional points under Criterion 2.8 Access to Public Transportation, **OR** earn 8 optional points through selecting one or more of the following:

- 2.7 Preservation of and Access to Open Space
- 2.9 Improving Connectivity to the Community
- 2.12 Access to Fresh, Local Foods
- 2.13 LEED for Neighborhood Development Certification
- 2.14 Local Economic Development and Community Wealth Creation

---

○ YES ○ NO ○ MAYBE M

2.1 Sensitive Site Protection

Do not locate new projects, including buildings, built structures, roads or parking areas, on portions of sites that meet any of the following provisions:

1. Land within 100 feet of wetlands, including isolated wetlands or streams. Maintain or establish riparian buffer using native vegetation where possible. Bike and foot paths are allowed if at least 25 feet from the wetlands boundary.
2. Land on slope greater than 15%.
3. Land with prime soils, unique soils or soils of state significance per USDA designations.
4. Public parkland.
5. Land that is specifically identified as an existing habitat for any species on federal or state threatened or endangered lists.
6. Land that is within the Special Flood Hazard Areas (SFHA) as identified by FEMA on the Flood Insurance Rate Map.

○ YES ○ NO ○ MAYBE M

2.2 Connections to Existing Development and Infrastructure *(Except for projects located on rural tribal lands, in colonias communities, or in communities with populations of less than 10,000)*

Locate the project on a site with access to existing roads, water, sewers and other infrastructure within or contiguous to (having at least 25% of the perimeter bordering) existing development. Connect the project to the pedestrian grid.

○ YES ○ NO ○ MAYBE M

2.3 Compact Development

At a minimum, build to the residential density (dwelling units / acre) of the census block group in which your project is located.

○ YES ○ NO ○ MAYBE 5 or 7

2.4 Compact Development

Exceed the residential density (dwelling units / acre) of the census block group in which your project is located. Exceed by 2x for *[5 points]*; exceed by 3x for *[7 points]*.

○ YES ○ NO ○ MAYBE M

2.5 Proximity to Services

Locate the project within a 0.5-mile walk distance of at least four, or a 1-mile walk distance of at least seven, of the listed services. For projects that qualify as Rural / Tribal / Small Town, locate the project within 5 miles of at least four of the listed services.

○ YES ○ NO ○ MAYBE M

2.6 Preservation of and Access to Open Space for Rural / Tribal / Small Towns

Set aside a minimum of 10% (minimum of 0.25 acre) of the total project acreage as non-paved open space for use by all residents **OR** locate the project within a 0.25-mile walk distance of dedicated public non-paved open space that is a minimum of 0.75 acres.

○ YES ○ NO ○ MAYBE 6 max

2.7 Preservation of and Access to Open Space

Set aside a percentage of non-paved open space for use by all residents. 20% *[2 points]*; 30% *[4 points]*; 40% + written statement of preservation / conservation policy for set-aside land *[6 points]*.

M = MANDATORY
# = OPTIONAL POINTS

LOCATION + NEIGHBORHOOD FABRIC (continued)

YES NO MAYBE — 8 or 10

2.8 Access to Public Transportation

Locate projects within a 0.5-mile walk distance of transit services combined (bus, rail and /or ferry), constituting at least 60 or more transit rides per weekday, with some type of weekend ride option.
[8 points]

For projects that qualify as Rural /Tribal /Small Town, locate the project within a 5-mile distance of at least one of the following transit options: 1) vehicle share program; 2) dial-a-ride program; 3) employer vanpool; 4) park-and-ride; or 5) public–private regional transportation. *[8 points]*

For an additional 2 points: Locate the project along dedicated bike trails or lanes that lead to transit services or stations (bus, rail and ferry) within 3 miles.

YES NO MAYBE — 2 to 8

2.9 Improving Connectivity to the Community

Improve access to community amenities through at least one of the transit, auto or biking mobility measures listed.

YES NO MAYBE — 5 max

2.10 Passive Solar Heating /Cooling

Design and build with passive solar design, orientation and shading that meet specified guidelines.

YES NO MAYBE — 4

2.11 Brownfield Site or Adaptive Reuse Building

Rehabilitate an existing structure that was not previously used as housing or locate the project on a brownfield site.

YES NO MAYBE — 6

2.12 Access to Fresh, Local Foods

Pursue one of three options to provide residents and staff with access to fresh, local foods, including neighborhood farms and gardens, community-supported agriculture, or proximity to farmers markets.

YES NO MAYBE — 4

2.13 LEED for Neighborhood Development Certification

Locate building(s) in a Stage 2 Pre-Certified or Stage 3 Certified Neighborhood Development.

YES NO MAYBE — 6 max

2.14 Local Economic Development and Community Wealth Creation

Demonstrate that local preference for construction employment and subcontractor hiring was part of your bidding process *[2 points]* **OR** demonstrate that you achieved at least 20% local employment *[3 points]* **OR** provide physical space for small business, nonprofits, and /or skills and workforce education *[3 points]*.

SUBTOTAL OPTIONAL POINTS

3. SITE IMPROVEMENTS

YES NO MAYBE — M

3.1 Environmental Remediation

Conduct an environmental site assessment to determine whether any hazardous materials are present on-site; mitigate any found.

HPD Overlay:
New Construction, Third Party Transfer, and Participation Loan Program projects require Phase 1 Environmental Assessments. All other projects should comply with the applicable environmental assessment requirements of the HPD programs. Projects not producing Phase 1 reports should submit a memo outlining the assessment and remediation measures taken.

YES NO MAYBE — M

3.2 Erosion and Sedimentation Control *(Except for infill sites with buildable area smaller than one acre)*

Implement EPA's Best Management Practices for Construction Site Stormwater Runoff Control, or local requirements, whichever is more stringent.

M = MANDATORY
# = OPTIONAL POINTS

SITE IMPROVEMENTS (continued)

○ YES ○ NO ○ MAYBE M

3.3 Low-Impact Development

Projects located on greenfields must meet the list of low-impact development criteria.

○ YES ○ NO ○ MAYBE M

3.4 Landscaping

If providing plantings, all should be native or adapted to the region, appropriate to the site's soil and microclimate, and none of the new plants is an invasive species. Reseed or xeriscape all disturbed areas.

HPD Overlay:
See "Resources" in full 2015 Criteria for databases of native and adapted plants.

○ YES ○ NO ○ MAYBE M

3.5a Efficient Irrigation and Water Reuse

If irrigation is used, install an efficient irrigation or water reuse system per the guidelines.

○ YES ○ NO ○ MAYBE 4 or 8

3.5b Efficient Irrigation and Water Reuse

Install an efficient irrigation system equipped with a WaterSense-labeled weather-based irrigation controller (WBIC) OR at least 50% of the site's irrigation should be satisfied by reusing water.

○ YES ○ NO ○ MAYBE 4 or 8

3.6 Surface Stormwater Management

Retain, infiltrate and /or harvest the first 1.0 inch of rain that falls *[4 points]* OR as calculated for a 24-hour period of a one-year (1) storm event, so that no stormwater is discharged to drains / inlets. *[8 points]* For both options, permanently label all storm drains and inlets.

○ YES ○ NO ○ MAYBE 1

3.7 Reducing Heat-Island Effect: Paving

Use light-colored, high-albedo materials and/or an open-grid pavement, with a minimum solar reflectance of 0.3, over at least 50% of the site's hardscaped area.

SUBTOTAL OPTIONAL POINTS

4. WATER CONSERVATION

○ YES ○ NO ○ MAYBE M

4.1 Water-Conserving Fixtures

Install water-conserving fixtures in all units and any common facilities with the following specifications. *Toilets:* WaterSense-labeled and 1.28 gpf; *Urinals*: WaterSense-labeled and 0.5 gpf; *Showerheads:* WaterSense-labeled and 2.0 gpm; *Kitchen faucets*: 2.0 gpm; *Lav faucets*: WaterSense- labeled and 1.5 gpm

AND for all single-family homes and all dwelling units in buildings three stories or fewer, the static service pressure must not exceed 60 psi.

○ YES ○ NO ○ MAYBE 6 max

4.2 Advanced Water Conservation

Reduce water consumption either by installing water-conserving fixtures in all units and all common space bathrooms with the following specifications: *Toilets:* WaterSense-labeled and 1.1 gpf *[1 point]*; *Showerheads*: WaterSense-labeled and 1.5 gpm *[1 point]*; Kitchen *faucets:* 1.5 gpm and *lav faucets:* WaterSense-labeled and 1.0 gpm *[1 point]*
OR
Reduce total indoor water consumption by at least 30% compared to the baseline indoor water consumption chart, through a combination of your choosing. *[6 points maximum]*

HPD Overlay:
Projects are **REQUIRED** to achieve at least 3 points through this criterion.

M = MANDATORY
# = OPTIONAL POINTS

WATER CONSERVATION (continued)

○ YES ○ NO ○ MAYBE 4

4.3 Leaks and Water Metering

Conduct pressure-loss tests and visual inspections to determine if there are any leaks; fix any leaks found; and meter or submeter each dwelling unit with a technology capable of tracking water use. Separately meter outdoor water consumption.

HPD Overlay:
*Projects are **REQUIRED** to achieve this criterion.*

In NYC, annual water cost can exceed annual fuel cost in some buildings. Water submeters can help identify and locate leaks quickly so that waste and cost is reduced drastically—a 1 gpm leak costs about $6,700 a year in NYC.

For new construction and substantial rehab projects, separately meter cold branches off the apartment line risers for each dwelling unit, the project laundry facilities, the boiler makeup water, outdoor water, and any commercial spaces. The meters are smaller, less costly, and easier to install (and wire) and make leaks much easier to pinpoint.

When a plumbing retrofit will be difficult as with moderate rehabs, projects may follow the more cost-effective procedure of only metering the cold water risers and the domestic hot water (DHW) cold water feed for each building. Where code allows, we recommend using a press-fit pipe joining system instead of sweated joints. Such a system saves labor costs and permits otherwise impossible installations.

Equipment
All the system components are off the shelf. The meters should meet AWWA standards and include a pulse output (1 pulse per gallon is desirable).

More critical is meter sizing; oversizing is common. A 2-inch riser, for example, does not require a 2-inch meter. Not only would a 2-inch meter be much more expensive, but it would miss the very low flows it is supposed to detect. Most risers up to 2 inches in diameter in 6-story or shorter buildings can be handled by a ¾-inch meter.

The data-gathering system can be hard-wired or wireless; there are several vendors from which to choose. The data is sent from each meter to a datalogger inside the building, which passes it on to a website where it can be reviewed and downloaded. In cases where staff do not have time to review data for dozens of submeters, the website can be programmed to send out a text or email alarm to the maintenance staff when a leak is suspected.

Because it is easy to set up alarms, it is not necessary to dedicate an employee or outside firm to monitor the water data, but it is desirable and should be considered. Many firms now monitor other building functions, so adding water to the list should not be difficult.

Installation
In all cases the meters themselves should be installed by a licensed plumber. The data-gathering system can be installed by a controls or telecom contractor or, more expensively, by a licensed electrician.

Meters of the type used for this system will generally not require special pipe straight-runs, although they must be level. Some meters can be mounted either horizontally or vertically. The most crucial factor is to install every meter so it can be easily accessed for repairs or for manual reading (should that become necessary) – meters in cramped or inaccessible locations frequently end up ignored or forgotten.

Experience shows that domestic water systems frequently include long pipe runs without any shutoff capability, which makes future repairs more difficult and/or disruptive. A few extra well-placed isolation valves will pay large dividends over time.

Similarly, in new construction in particular, designers should be encouraged to make the pipes more accessible than they usually are, either by exposing them or placing them behind an easily-removable access door or chase. Pipes in an easily-removable chase would be easier to repair and inspect and might even be isolatable enough to eliminate water damage from a pipe burst or joint leak.

Experience also shows that basements frequently lack electrical outlets. With the increase in telecom, internet and cable TV installations and a likely rise in data-gathering systems like the one described here, strategically-located additional outlets would be quite valuable.

Installed cost will vary widely depending on meter size and location, new construction vs. retrofit, wireless vs. wired, local labor costs and other factors, but the cost per installed meter, including data system, is likely to be in the range of $500 to $2,000 per meter.

M = MANDATORY
# = OPTIONAL POINTS

WATER CONSERVATION (continued)

○ YES ○ NO ○ MAYBE 4

4.4 Efficient Plumbing Layout and Design

To minimize water loss from delivering hot water, the hot water delivery system shall store no more than 0.5 gallons of water in any piping/manifold between the hot water source and any hot water fixture.

○ YES ○ NO ○ MAYBE 6 max

4.5 Water Reuse

Harvest, treat, and reuse rainwater and/or greywater to meet a portion of the project's total water needs: 10% reuse *[3 points]*; 20% reuse *[4 points]*; 30% reuse *[5 points]*; 40% reuse *[6 points]*

○ YES ○ NO ○ MAYBE 8

4.6 Access to Potable Water During Emergencies

Provide residents with access to potable water in the event of an emergency that disrupts normal access to potable water, including disruptions related to power outages that prevent pumping water to upper floors of multifamily buildings or pumping of water from on-site wells, per one of the three options.

SUBTOTAL OPTIONAL POINTS

5. ENERGY EFFICIENCY

○ YES ○ NO ○ MAYBE M

5.1a Building Performance Standard *(New Construction: single-family and low-rise multifamily)*

Certify each dwelling unit in the project through the ENERGY STAR New Homes program.

HPD Overlay:
NYSERDA Low Rise Residential New Construction projects satisfy this requirement; associated incentives may be available. For more information, see www.nyserda.ny.gov/All-Programs/Programs/Low-Rise-Residential. Certification to any of the programs referenced in Criterion 5.2 (including PHIUS) also satisfy this requirement.

○ YES ○ NO ○ MAYBE M

5.1b Building Performance Standard *(New Construction: mid-rise and high-rise multifamily, with some exceptions)*

Certify the project through the ENERGY STAR Multifamily High-Rise program (MFHR) **OR** follow the combined MFHR and LEED Commissioning Path outlined in the criterion.

Exception: Multifamily buildings that are four or five stories, in which all dwelling units have their own heating, cooling and hot water systems, should comply with Criterion 5.1a and certify each dwelling unit per ENERGY STAR Certified New Homes.

HPD Overlay:
NYSERDA Multifamily Performance Program: New Construction Component projects satisfy this requirement; associated incentives may be available. For more information, see www.nyserda.ny.gov/All-Programs/Programs/MPP-New-Construction. Certification to any of the programs referenced in Criterion 5.2 (including PHIUS) also satisfy this requirement.

M = MANDATORY
# = OPTIONAL POINTS

ENERGY EFFICIENCY (continued)

○ YES ○ NO ○ MAYBE M

5.1c Building Performance Standard *(Substantial and Moderate Rehab: single-family and low-rise multifamily)*

For each dwelling unit, achieve a HERS Index score of 85 or less.

Exception: Substantial rehabs of buildings with walls made only of brick/masonry that are three stories or fewer and built before 1980, as well as moderate rehabs of buildings that are three stories or fewer and built before 1980, are permitted to instead achieve a HERS Index score of 100 or less for each dwelling unit.

HPD Overlay:
Note that the NYSERDA Low Rise Residential New Construction program is available for Gut Rehabilitations and would satisfy the requirements of this criterion. Associated incentives may be available. For more information, see www.nyserda.ny.gov/All-Programs/Programs/Low-Rise-Residential . Certification to any of the programs referenced in Criterion 5.2 (including PHIUS) also satisfy this requirement.

○ YES ○ NO ○ MAYBE M

5.1d Building Performance Standard *(Substantial and Moderate Rehab: mid-rise and high-rise)*

Demonstrate that the energy performance of the completed building will be equivalent to ASHRAE 90.1-2010 using an energy model created by a qualified energy services provider per Appendix G.

HPD Overlay:
NYSERDA Multifamily Performance Program: Existing Buildings projects satisfy this requirement; associated incentives may be available. For more information, see www.nyserda.ny.gov/All-Programs/Programs/MPP-Existing-Buildings . Certification to any of the programs referenced in Criterion 5.2 (including PHIUS) also satisfy this requirement.

○ YES ○ NO ○ MAYBE 5 to 12

5.2a Additional Reductions in Energy Use

Design and construct a building that is projected to be at least 5% more efficient than what is required of the project by Criteria 5.1a–d. (Projects receiving points in Criterion 5.2a may not receive points per Criterion 5.2b)

○ YES ○ NO ○ MAYBE 12

5.2b Advanced Certification: Nearing Net Zero

Certify the project in a program that requires advanced levels of building envelope performance such as PHIUS, Living Building Challenge and/or DOE Zero Energy Ready Home. (Projects receiving points in Criterion 5.2b may not receive points per Criterion 5.2a)

○ YES ○ NO ○ MAYBE M

5.3 Sizing of Heating and Cooling Equipment

Size and select heating and cooling equipment in accordance with the Air Conditioning Contractors of America (ACCA) Manuals J and S or ASHRAE handbooks.

○ YES ○ NO ○ MAYBE M

5.4 ENERGY STAR Appliances

If providing appliances, install ENERGY STAR clothes washers, dishwashers and refrigerators. If appliances will not be installed or replaced at this time, specify that, at the time of installation or replacement, ENERGY STAR models must be used.

○ YES ○ NO ○ MAYBE M

5.5 Lighting

Follow the guidance for high-efficacy lighting controls and other characteristics for all permanently installed lighting fixtures in project dwelling units, common spaces and exterior

5.6 Electricity Meter

○ YES ○ NO ○ MAYBE M *New Construction and Substantial Rehab*

○ YES ○ NO ○ MAYBE 6 *Moderate Rehab (Except for single-room occupancy and designated supportive housing dwelling units)*

Install individual or submetered electric meters for all dwelling units.

M = MANDATORY
# = OPTIONAL POINTS

ENERGY EFFICIENCY (continued)

○ YES ○ NO ○ MAYBE 4

5.7a Photovoltaic / Solar Hot Water Ready

Orient, design, engineer, wire and /or plumb the development to accommodate installation of photovoltaic (PV) or solar hot water system in the future.

HPD Overlay:
Projects are urged to implement a solar-ready design.

○ YES ○ NO ○ MAYBE 10 max

5.7b Renewable Energy

Install photovoltaic (PV) panels or other electric-generating renewable energy source to provide a specified percentage of the project's estimated total energy demand or water heating energy demand. *(Projects may earn points through Criterion 5.7b or 5.8b, but not both.)*

	5%	10%	20%	30%	40%
Single-story / Single-family	—	—	6	8	10
2 to 3 stories	—	6	8	10	—
4 stories or more	6	8	10	—	—

○ YES ○ NO ○ MAYBE 8

5.8a Resilient Energy Systems: Floodproofing

Conduct floodproofing, including perimeter floodproofing (barriers/shields), of lower floors. Design and install building systems as specified by the full criterion so that the operation of those systems will not be grossly affected in case of a flood.

○ YES ○ NO ○ MAYBE 4 to 8

5.8b Resilient Energy Systems: Islandable Power

Provide emergency power through an islandable photovoltaic (PV) system or an efficient and permanent generator that will offer at least limited electricity for critical circuits during power outages per one of the three options listed. *(Projects may earn points through Criterion 5.7b or 5.8b, but not both.)*

SUBTOTAL OPTIONAL POINTS

6. MATERIALS

○ YES ○ NO ○ MAYBE M

6.1 Low / No VOC Paints, Coatings and Primers

All interior paints and primers must have VOC levels, in grams per liter, less than or equal to the thresholds established by South Coast Air Quality Management District (SCAQMD) Rule 1113.

○ YES ○ NO ○ MAYBE M

6.2 Low / No VOC Adhesives and Sealants

All adhesives and sealants (including caulks) must have VOC levels, in grams per liter, less than or equal to the thresholds established by the South Coast Air Quality Management District Rule 1168.

○ YES ○ NO ○ MAYBE 3 max

6.3 Recycled Content Material

Incorporate building materials that are composed of at least 25% post-consumer recycled content or at least 50% post-industrial recycled content. *[1 point]*

Building materials that make up at least 75% of their project component each receive *1 point*.

M = MANDATORY
# = OPTIONAL POINTS

MATERIALS (continued)

○ YES ○ NO ○ MAYBE — 4 max

6.4 Regional Materials

Use products that were extracted, processed and manufactured within 500 miles of the project for a minimum of 50%, based on cost, of the building materials' value.

Select any or all of these options (each material can qualify for *1 point*):

- Framing materials
- Exterior materials (e.g., siding, masonry, roofing)
- Flooring materials
- Concrete/cement and aggregate material
- Drywall/interior sheathing materials

○ YES ○ NO ○ MAYBE — 1

6.5 Certified, Salvaged and Engineered Wood Products

For at least 25% of all structural wood products, by cost or value, commit to using either FSC-certified, salvaged products or engineered framing materials without urea formaldehyde.

○ YES ○ NO ○ MAYBE — M

6.6 Composite Wood Products that Emit Low/No Formaldehyde

All composite wood products must be certified as compliant with California 93120 Phase 2 **OR**, if using a composite wood product that does not comply with California 93120 Phase 2, all exposed edges and sides must be sealed with low-VOC sealants, per Criterion 6.2.

○ YES ○ NO ○ MAYBE — M

6.7a Environmentally Preferable Flooring

Do not install carpets in building entryways, laundry rooms, bathrooms, kitchens / kitchenettes, utility rooms or any rooms built on foundation slabs. Where installed, all carpet products must meet the Carpet and Rug Institute's Green Label or Green Label Plus certification for carpet, pad and carpet adhesives. Any hard surface flooring products must be either ceramic tile or solid unfinished hardwood floors, or meet the Scientific Certification System's FloorScore program criteria (including pre-finished hardwood flooring).

○ YES ○ NO ○ MAYBE — 6

6.7b Environmentally Preferable Flooring: Throughout Building

Use non-vinyl, non-carpet floor coverings throughout each building in the project.

○ YES ○ NO ○ MAYBE — M

6.8 Mold Prevention: Surfaces

Use materials that have durable, cleanable surfaces throughout bathrooms, kitchens and laundry rooms. Materials installed in these rooms should not be prone to deterioration due to moisture intrusion or encourage the growth of mold.

○ YES ○ NO ○ MAYBE — M

6.9 Mold Prevention: Tub and Shower Enclosures

Use moisture-resistant backing materials such as cement board, fiber cement board or equivalent per ASTM #D3273 behind tub / shower enclosures. Projects using a one-piece fiberglass tub / shower enclosure are exempt from this requirement.

○ YES ○ NO ○ MAYBE — 12 max

6.10 Asthmagen-Free materials

Do not install products that contain ingredients that are known to cause or trigger asthma. Key products to avoid are:

- *Insulation:* Do not use spray polyurethane foam (SPF) or formaldehyde-containing fiberglass batts. *[4 points]*
- *Flooring:* Do not use flexible vinyl (PVC) roll or sheet flooring or carpet-backed with vinyl with phthalates. Do not use fluid applied finish floors. *[4 points]*
- *Wall coverings:* Do not use wallpaper made from vinyl (PVC) with phthalates or site-applied high-performance coatings that are epoxy or polyurethane based. *[4 points]*
- *Composite wood:* Use only ULEF products for cabinetry, subflooring and other interior composite wood uses. *[4 points]*

YES NO MAYBE 5

6.11 Reduced Heat-Island Effect: Roofing

Use an ENERGY STAR–certified roofing product for 100% of the roof area **OR** install a "green" (vegetated) roof for at least 50% of the roof area and ENERGY STAR–certified roofing product for the remainder of the roof area.

HPD Overlay:
Projects are **REQUIRED** to comply with this criterion.

YES NO MAYBE M or 6 max

6.12 Construction Waste Management

Commit to following a waste management plan that reduces non-hazardous construction and demolition waste through recycling, salvaging or diversion strategies through one of the three options. Achieve optional points by going above and beyond the requirement.

YES NO MAYBE 3

6.13 Recycling Storage

Provide separate bins for the collection of trash and recycling for each dwelling unit and all shared community rooms (if applicable).

Additionally, in multifamily buildings, provide at least one easily accessible, permanent and dedicated indoor area for the collection and storage of materials for recycling. In single-family homes, points will be accrued only if curb-side recycling pickup is available.

Collected materials should include, at a minimum, paper, cardboard, glass, metals and plastics.

HPD Overlay:
Projects are **REQUIRED** to comply with this criterion

SUBTOTAL OPTIONAL POINTS

7. HEALTHY LIVING ENVIRONMENT

7.1 Ventilation

YES NO MAYBE M *New Construction and Substantial Rehab*

YES NO MAYBE 12 max *Moderate Rehab*

For each dwelling unit, in full accordance with ASHRAE 62.2-2010, install a local mechanical exhaust system in each bathroom *[4 points]*, a local mechanical exhaust system in each kitchen *[4 points]*, and a whole-house mechanical ventilation system *[4 points]*.

For each multifamily building of four stories and more, in full accordance with ASHRAE 62.1-2010, install a mechanical ventilation system for all hallways and common spaces *[3 points]*.

For all project types, in addition to the above requirements:

- All systems and associated ductwork must be installed per manufacturer's recommendations.
- All individual bathroom fans must be ENERGY STAR labeled, wired to turn on with the light switch, and equipped with a humidistat sensor, timer or other control (e.g., occupancy sensor, delay off switch, ventilation controller).
- If using central ventilation systems with rooftop fans, each rooftop fan must be direct-drive and variable-speed with speed controller mounted near the fan. Fans with design CFM 300-2000 must also have an ECM motor.

HPD Overlay:
All **new construction** projects with mechanical exhaust ventilation are required to specify properly sealed ductwork and specify a means of exhaust balancing. Constant Airflow Regulators are recommended. All **substantial rehab** projects with existing central exhaust ventilation systems are required to specify cleaning, sealing, balancing, and right-sizing roof-top fans. All **moderate rehab** projects with existing central exhaust ventilation systems are required to calculate cost/benefit of cleaning, sealing, balancing, and right-sizing roof-top fans.

We strongly recommend that project teams incorporate performance-based ventilation specifications in their construction documents.

Additional reference for ventilation retrofit:
http://www.buildingscience.com/documents/bareports/ba-1209-multifamily-ventilation-retrofit-strategies

YES NO MAYBE M

7.2 Clothes Dryer Exhaust

Clothes dryers must be exhausted directly to the outdoors using rigid-type ductwork (except for condensing dryers, which must be plumbed to a drain).

YES NO MAYBE M

7.3 Combustion Equipment

For new construction and rehab projects, specify power-vented or direct vent equipment when installing any new combustion appliance for space or water heating that will be located within the conditioned space.

In Substantial and Moderate Rehabs, if there is any combustion equipment located within the conditioned space for space or water heating that is not power-vented or direct vent and that is not scheduled for replacement, conduct initial combustion safety testing per the given guidelines.

Install one hard-wired carbon monoxide (CO) alarm with battery backup function for each sleeping zone, placed per National Fire Protection Association (NFPA) 720.

YES NO MAYBE 9 or 11

7.4 Elimination of Combustion Within the Conditioned Space

No combustion equipment may be used for cooking (to include, but not limited to ranges, cooktops, stoves, ovens) as part of the building project [*9 points]* OR no combustion equipment may be used as part of the building project [*11 points].*

YES NO MAYBE M

7.5 Vapor Retarder Strategies

Install vapor barriers that meet specified criteria appropriate for the foundation type.

YES NO MAYBE M

7.6 Water Drainage *(For all New Construction projects and those Rehab projects that include replacing particular assemblies called out below)*

Provide drainage of water away from walls, windows and roofs by implementing the list of techniques.

YES NO MAYBE M

7.7 Mold Prevention: Water Heaters

Provide adequate drainage for water heaters that includes drains or catch pans with drains piped to the exterior of the dwelling.

YES NO MAYBE M

7.8 Radon Mitigation

For New Construction in EPA Zone 1 areas, install passive radon-resistant features below the slab and a vertical vent pipe with junction box within 10 feet of an electrical outlet in case an active system should prove necessary in the future. For Substantial Rehab projects in EPA Zone 1, test and mitigate per the specified protocols.

YES NO MAYBE M

7.9 Garage Isolation

- Provide a continuous air barrier between the conditioned space and any garage space to prevent the migration of any contaminants into the living space. Visually inspect common walls and ceilings between attached garages and living spaces to ensure that they are air-sealed before insulation is installed.
- Do not install ductwork or air handling equipment in a garage.
- Fix all connecting doors between conditioned space and garage with gaskets or otherwise make substantially airtight with weather stripping.
- Install one hard-wired carbon monoxide (CO) alarm with battery backup function for each sleeping zone of the project, placed per National Fire Protection Association (NFPA) 720.

YES NO MAYBE M

7.10 Integrated Pest Management

Seal all wall, floor, and joint penetrations with low-VOC caulking or other appropriate nontoxic sealing methods to prevent pest entry.

M = MANDATORY
# = OPTIONAL POINTS

HEALTHY LIVING ENVIRONMENT (continued)

○ YES ○ NO ○ MAYBE	9	**7.11a Beyond ADA: Universal Design** *(New Construction)* Design a minimum of 15% of the dwelling units (no fewer than one) in accordance with ICC / ANSI A117.1, Type A, Fully Accessible guidelines. Design the remainder of the ground-floor units and elevator-reachable units in accordance with ICC / ANSI A117.1, Type B.
○ YES ○ NO ○ MAYBE	7 or 9	**7.11b Beyond ADA: Universal Design** *(Substantial and Moderate Rehab)* Design a minimum of 10% of the dwelling units (one, at minimum) in accordance with ICC / ANSI A117.1, Type A, Fully Accessible guidelines. *[7 points]* *For an additional 2 points:* Design the remainder of the ground-floor units and elevator-reachable units with accessible unit entrances designed to accommodate people who use a wheelchair.
○ YES ○ NO ○ MAYBE	M	**7.12 Active Design: Promoting Physical Activity Within the Building** Situate at least one building stairway per the criterion to encourage use OR emphasize at least one strategy inside the building designed to increase frequency and duration of physical activity per the criterion.
○ YES ○ NO ○ MAYBE	10	**7.13 Active Design: Staircases and Building Circulation** A staircase must be accessible and visible from the main lobby as well as visible within a 25-foot walking distance from any edge of lobby. Ensure that no turns or obstacles prevent visibility of or accessibility to the qualifying staircase from the lobby, and that the staircase is encountered before or at the same time as the elevators. From the corridor, accessible staircases should be made visible by: Providing transparent glazing of at least 10 square feet (1 square meter) at all stair doors or at a side light OR providing magnetic door holds on all doors leading to the stairs OR removing door enclosures / vestibules. HPD Overlay: HPD recommends that all projects thoroughly consider implementing this criterion.
○ YES ○ NO ○ MAYBE	9	**7.14 Interior and Outdoor Activity Spaces for Children and Adults** Provide an on-site dedicated recreation space with exercise or play opportunities for adults and / or children that is open and accessible to all residents; see criterion for specifics.
○ YES ○ NO ○ MAYBE	M	**7.15 Reduce Lead Hazards in Pre-1978 Buildings** *(Substantial Rehab)* Conduct lead risk assessment or inspection to identify lead hazards, then control for these per EPA or state / local laws and requirements.
○ YES ○ NO ○ MAYBE	10	**7.16 Smoke-Free Building** Implement and enforce a no-smoking policy in all common and individual living areas, and within a 25-foot perimeter around the exterior of all residential projects. HPD Overlay: HPD strongly recommends that all projects consider implementing a smoke-free building policy. For guidance, please see "Resources" in the full 2015 Criteria, which includes the New York City Department of Health's Smoke-Free Housing Resources.
		SUBTOTAL OPTIONAL POINTS

M = MANDATORY
# = OPTIONAL POINTS

8. OPERATIONS, MAINTENANCE, + RESIDENT ENGAGEMENT

○ YES ○ NO ○ MAYBE M

8.1 Building Operations & Maintenance (O&M) Manual and Plan *(For all multifamily projects)*

Develop a manual with thorough building operations and maintenance guidance and a complementary plan. The manual and plan should be developed over the course of the project design, development and construction stages, and should include sections/chapters addressing the list of topics.

HPD Overlay:
Note that if your project exceeds 50,000 ft², compliance with this criterion will aid in your project's compliance with Local Law 87. Also note Current Facility Requirements (CFR) also may fit this criterion.

○ YES ○ NO ○ MAYBE M

8.2 Emergency Management Manual *(For all multifamily projects)*

Provide a manual on emergency operations targeted toward operations and maintenance staff and other building-level personnel. The manual should address responses to various types of emergencies, leading with those that have the greatest probability of negatively affecting the project. The manual should provide guidance as to how to sustain the delivery of adequate housing throughout an emergency and cover a range of topics, including but not limited to:

- communication plans for staff and residents
- useful contact information for public utility and other service providers
- infrastructure and building "shutdown" procedures

○ YES ○ NO ○ MAYBE M

8.3 Resident Manual

Provide a guide for homeowners and renters that explains the intent, benefits, use and maintenance of their home's green features and practices. The Resident Manual should encourage green and healthy activities per the list of topics.

○ YES ○ NO ○ MAYBE M

8.4 Resident and Property Staff Orientation

Provide a comprehensive walk-through and orientation for all residents, property manager(s) and buildings operations staff. Use the appropriate manuals (see Criteria 8.1, 8.2, 8.3) as the base of the curriculum, and review the project's green features, operations and maintenance procedures, and emergency protocols.

○ YES ○ NO ○ MAYBE M

8.5 Project Data Collection and Monitoring System: 100% Owner-Paid Utility Accounts; 15% Tenant-Paid Utility Account

For rental properties: Collect and monitor project energy and water performance data for 100% of owner-paid utilities and 15% of tenant-paid utilities for at least 5 years. This data must be maintained in a manner that allows staff to easily access and monitor it, enabling them to make informed operations and capital planning decisions. Also allow Enterprise access to this data.

For owner-occupied units: Collect and monitor energy and water performance data in a manner that allows for easy access and review and provides the ability to influence home operations. Also allow Enterprise access to this data.

HPD Overlay:
HPD's *Benchmarking Protocol* satisfies compliance with this criterion. Projects will also share data with Enterprise.

○ YES ○ NO ○ MAYBE 7 or 11

8.6 Project Data Collection and Monitoring System: Greater than 15% Tenant-Paid Utility Accounts

Collect and monitor project energy and water performance data for at least 5 years. This data must be maintained in a manner that allows staff to easily access and monitor it, enabling them to make informed operations and capital planning decisions. Also allow Enterprise access to this data.16–60% of units *[7 points]*; 60–100% of units *[11 points]*.
HPD Overlay:
HPD strongly recommends that all projects implement this measure.

SUBTOTAL OPTIONAL POINTS

TOTAL OPTIONAL POINTS

APPENDIX H:
HPD-HDC Marketing Guidelines

MARKETING GUIDELINES

Updated March 2012

NYC HDC
NEW YORK CITY
HOUSING DEVELOPMENT
CORPORATION

NYC
Department of
Housing Preservation
& Development

1. Introduction
2. Basic Sequence of Activities
3. Marketing Plan Checklist
4. Outline of Procedures
5. Submissions and Ongoing Reporting Requirements
6. List of Attachments

INTRODUCTION

NYC HDC
NEW YORK CITY
HOUSING DEVELOPMENT
CORPORATION

NYC
Department of
Housing Preservation
& Development

WHAT THIS MANUAL *IS:*

The Marketing Guidelines describe policies, procedures, and certain requirements for the marketing and selection of residents for developments ("Projects") subsidized by the New York City Department of Housing Preservation and Development ("HPD") and/or the New York City Housing Development Corporation ("HDC") (together, the "Agencies"). Developers, owners, marketing agents, and sponsors of Projects ("Developer(s)") must follow these guidelines in preparing marketing plans for their Projects and comply with its specific requirements.

The Developer should consult the monitoring agency in the event any questions or concerns arise with respect to the procedures set forth in these guidelines, as well as the occupancy requirements.

The primary objective of the marketing effort for the Project is to select diverse tenants, including those with mobility, visual, or hearing impairments that require an adaptable/accessible apartment. Outreach efforts utilized by the Developer are a critical tool in the development of a diverse applicant pool and tenancy.

The Developer must also comply with all applicable fair housing and equal housing opportunity requirements and the requirements of any other governmental agencies.

WHAT THIS MANUAL *IS NOT*

The Marketing Guidelines are not a comprehensive compliance manual. The Developer must ensure that its employees and agents are fully trained in all facets of the program and all requirements of the specific occupancy requirements of each Project. Maintaining compliance is the Developer's responsibility.

This manual also does not contain specific occupancy requirements for Projects. Developers must refer to their Project's Regulatory Agreement for income, rent, and other occupancy restrictions.

BASIC SEQUENCE OF ACTIVITIES

NYC HDC
NEW YORK CITY
HOUSING DEVELOPMENT
CORPORATION

NYC
Department of
Housing Preservation
& Development

BASIC SEQUENCE OF ACTIVITIES

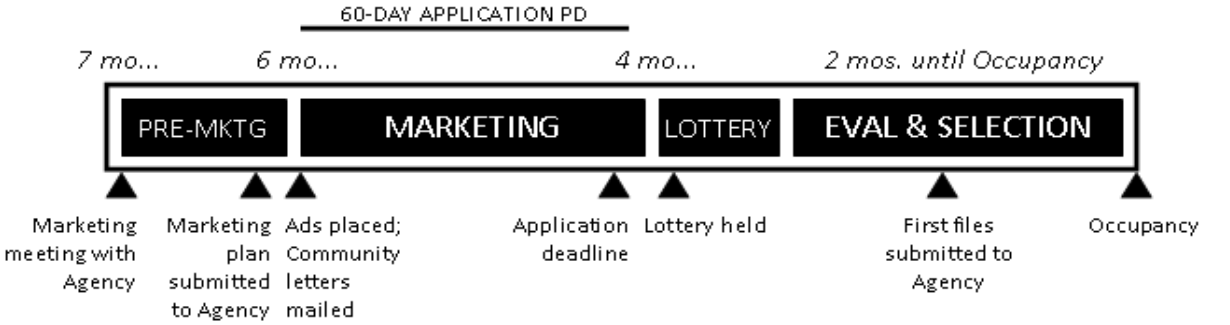

Figure 1: Major milestones in marketing process

ACTIVITY	*TIMELINE*
1. Project site sign erected and information posted on website and hotline	At the start of construction
2. Inquiry list maintained	On an ongoing basis
3. Marketing meeting held with Agency	Seven (7) months prior to anticipated occupancy
4. Marketing Plan submitted to Agency at Marketing meeting	At least six (6) months prior to anticipated occupancy
5. Community contact letters mailed and advertisements placed	Represents commencement of marketing period, at least sixty (60) days prior to application deadline date.
6. Marketing sign erected with information on how to obtain applications	At commencement of the marketing period
7. Lock box/P.O. Box established for receipt of applications	At commencement of the marketing period
8. Applications mailed to inquiry list; requests for applications processed as received	When first advertisement is published
9. Application postmark deadline	Represents completion of sixty (60) day marketing period
10. Compliance Meeting held with Agency	Two weeks before the Lottery
11.Lockbox/P.O. Box is opened; Hold	Seven (7) to ten (10) days after application

lottery	deadline
12. Log applicants; review applications	Approximately 2-3 months before occupancy.
13. Submit files to monitoring agency	Occupancy begins.
14. After approval from agency, occupancy begins	

MARKETING PLAN CHECKLIST

NYC HDC
NEW YORK CITY
HOUSING DEVELOPMENT
CORPORATION

NYC
Department of
Housing Preservation
& Development

Prior to implementing the Developer's marketing plan for the Project ("Marketing Plan"), the Developer must submit the Marketing Plan for Agency review and approval. Below is a Marketing Plan Checklist.

- ✓ CONSTRUCTION SITE SIGNAGE ERECTED
- ✓ INQUIRY LIST MAINTAINED
- ✓ FILE NOTICE OF INTENT WITH AGENCY
- ✓ MARKETING MEETING WITH AGENCY
- ✓ FILE MARKETING PLAN WITH AGENCY
- ✓ SUBMIT DRAFT OF ADVERTISEMENT TO AGENCY FOR APPROVAL
- ✓ SUBMIT MARKETING AGENT AND/OR MANAGING AGENT AGREEMENT TO AGENCY
- ✓ AGENCY ESTABLISHES CALLER SERVICE BOX
- ✓ REMIT PAYMENT TO AGENCY FOR CALLER SERVICE BOX
- ✓ DRAFT AND MAIL COMMUNITY CONTACT LETTERS
- ✓ AGENCY MAILS ELECTED OFFICIAL LETTERS
- ✓ MARKETING SIGN ERECTED WITH INFORMATION ON HOW TO OBTAIN APPLICATIONS
- ✓ PLACE ADVERTISEMENTS IN NEWSPAPERS
- ✓ PROVIDE AGENCY WITH <u>ALL</u> COPIES OF ACTUAL ADVERTISEMENTS
- ✓ MAIL APPLICATIONS TO INTERESTED APPLICANTS ON INQUIRY LIST; REQUESTS FOR APPLICATIONS PROCESSED AS RECEIVED
- ✓ HOLD INFORMATIONAL SEMINARS AT LOCAL FACILITIES, SUCH AS COMMUNITY BOARD(S) AND/OR LOCAL ORGANIZATIONS
- ✓ SCHEDULE LOTTERY WITH AGENCY
- ✓ HIRE STAFF FOR SCHEDULE LOTTERY DATE(S)
- ✓ HOLD LOTTERY
- ✓ ATTEND COMPLIANCE MEETING WITH AGENCY
- ✓ SUBMIT ELECTRONIC LOG TO AGENCY FOR REVIEW
- ✓ PROCESS LOTTERY LOG
- ✓ SUBMIT FILES TO AGENCY FOR REVIEW AND APPROVAL
- ✓ SUBMIT INTERMITTENT LOG UPDATES WITH DISPOSITION COMMENTS AND STATS REPORT
- ✓ REQUEST WAIVER(S), IF NEEDED
  AGENCEY APPROVAL DATE _____
- ✓ REQUEST OPEN MARKET, IF NEEDED
  AGENCEY APPROVAL DATE _____
- ✓ SUBMIT INITIAL MOVE-IN CERTIFICATION TO AGENCY
- ✓ SUBMIT FINAL LOG WITH DISPOSITION COMMENTS AND STATS REPORT

OUTLINE OF PROCEDURES

I. PRE-MARKETING
II. MARKETING
III. LOTTERY
IV. APPLICANT EVALUATION & RESIDENT SELECTION

NYC HDC
NEW YORK CITY HOUSING DEVELOPMENT CORPORATION

NYC
Department of Housing Preservation & Development

I. PRE-MARKETING

A. PROJECT SITE SIGN AND MARKETING SIGN

The Developer must display a project site sign, provided by the Agency, on site in public view, beginning at the start of construction. The project sign is to remain erected on the site until construction is substantially complete. *See Site Sign Request Form, Attachment A-1.*

- ✓ **The Marketing Plan should state the date that the project site sign was erected.**

The Developer must also design and display on site and in public view a legible marketing sign with information on how to obtain an application for a unit. The marketing sign should be displayed upon commencement of the marketing period and remain until the conclusion of the marketing effort.

- ✓ **The Marketing Plan should include a sample marketing sign and should state the approximate date on which the sign will be erected.**

B. INQUIRY LIST

At the start of construction, an inquiry list should be maintained by the Developer's office. Inquiries must be accepted up to the deadline date for requests for applications. The inquiry list should include the following information:

- Name and contact information of those interested in renting/purchasing a unit;
- How the inquiry was received, e.g. via telephone, email, walk-in, or mail. (The Developer may select the procedure for accepting inquiries.)
- ✓ **The Marketing Plan should outline these inquiry list procedures.**

C. AGENCY WEB SITE AND HOTLINE POSTING

The Developer must make the following information available to the Agency for posting on the Web site and Affordable Housing Hotline (*See Web Site Posting Form, Attachment A-2)*:

- Information related to the development (e.g. number of units; initial rents/sale prices);
- Developer or marketing agent contact info, if applicable;
- Expected construction completion date;
- Method for interested parties to be placed on an inquiry list.
- ✓ **The Marketing Plan should also include this basic project information.**

D. PRE-MARKETING MEETING

At least seven (7) months prior to anticipated occupancy, the Developer must contact the Agency to schedule a marketing meeting. At that time, Developer and Agency will meet to review the procedures for marketing, applicant evaluation and resident selection, occupancy, and management, as well as any related documents and reports. The Developer shall submit to the Agency a "Notice of Intent" form to initiate the marketing process.

- ✓ **The Marketing Plan should include a dated copy of the Notice of Intent.** *See Sample Notice of Intent to Market, Attachment C.*

E. MARKETING PLAN

Following the pre-marketing meeting, the Developer must submit to the Agency for review and comment a proposed Marketing Plan which will outline procedures to be followed in the Pre-marketing, Marketing, and Applicant Evaluation and Resident Selection phases. *See Marketing Plan Summary Sheet, Attachment B and See Marketing Plan Checklist, p. 10.*

- ✓ **The Marketing Plan should include the approximate date at which each of these items will be implemented/completed.**

II. MARKETING

The formal marketing process should begin at least six (6) months prior to the anticipated occupancy of the first unit. The placement of advertisements and other outreach efforts commences the official 60-day marketing period.

The Developer must ensure that the Project is always in compliance with the provisions of the Project's Regulatory Agreement. The Developer should be aware of its obligation to obtain, verify and provide the Agency, on an ongoing basis, with all required information. The Developer should fully familiarize themselves with the provisions of the Regulatory Agreement.

A. OUTREACH

Marketing aims to achieve the broadest practical citywide representation in its outreach efforts. The Developer's outreach effort is an essential element in the development of a diverse applicant pool and tenancy. The Agency expects the Developer's Marketing Plan to be designed to achieve this objective.

The Agency requires the use of community and citywide civic organizations as part of the marketing effort.

Elected Official and Community Board Letters

At the commencement of marketing, the Agency submits letters to the Community Board and elected officials affiliated with the district in which the development is located.

Community Outreach Letters

The Developer must provide additional methods of community contact and describe these methods in the Marketing Plan. It should be stressed that targeted outreach is extremely important to the marketing process in order to adequately fill the preference categories. Community outreach letters should be mailed by the Developer at least sixty (60) days prior to the deadline date for receipt of applications. *See Outline of Contents for Community Contact Letter(s), Attachment D.*

At a minimum, the Developer should initiate contact with the local Community Board to discuss the project and possible outreach options. Some other examples of outreach methods include:

- Attending a monthly Community Board meeting to discuss the project;
- Meeting with other local community groups, e.g. religious congregations;
- Discussing project outreach with private and not-for-profit community organizations; and
- Posting flyers in local unions or governmental agencies.

✓ **The Marketing Plan must describe all methods of community contact, including, but not limited to:**

- Any marketing consultants the Developer intends to retain, providing the Agency with a statement summarizing their relevant experience and expertise. All marketing consultants must be approved by the Agency;
- Any management companies the Developer intends to retain, providing the Agency with a statement summarizing their relevant experience and expertise and include a brief management plan *See Outline of Management Plan, Attachment E*;
- The intended outreach time schedules and types of materials to be distributed;
- Specific organizations and institutions (e.g., Community Board, private and not-for-profit organizations, local newspapers, senior centers, labor unions, government agencies), and their respective roles in the marketing process.

B. ADVERTISEMENTS

- Advertisements should appear at least sixty (60) days prior to the deadline date for receipt of applications. *See Sample Advertisement with Logos, Attachments F-1 and F-2.*

✓ **The Marketing Plan must list advertisement publication dates and indicate the name(s) of the publications and the proposed dates of the advertisements to be utilized.**

- The Developer shall begin marketing by placing an advertisement for applicants in accordance with the following:
  a. The Agency will provide the Developer with the final advertisement format. No changes to the format will be permitted without the prior written approval of the Agency.
  b. Copies of the advertisements must be submitted to the Agency for approval prior to publication. Advertisement draft approvals are required from multiple parties, in addition to the Agency, depending on the number of vested parties involved in the project. The Developer should ensure to allow enough time to receive each of these approvals. *See Sample Routing Slip, Attachment F-3.*
  c. After obtaining Agency approval, the Developer is responsible for placing the ad. The ad must be advertised in at least three (3) newspapers, including:
     - ❖ One (1) citywide daily newspaper with a circulation of at least 200,000;
     - ❖ One (1) ethnic-based newspaper with a circulation of at least 10,000;

       In order to insure that your marketing meets the Affirmative Fair Housing Requirements, in addition to choosing a citywide publication that is generally read by all ethnic groups, the ethnic publication chosen should be one that serves the minority group(s) least likely to apply for this housing. *For further guidance, see Attachment F-4 and F-5.*
     - ❖ One (1) local newspaper.
  d. The ad is to run at least three (3) days with at least one (1) day falling on a weekend. The first day an Ad appears must be at least sixty (60) days prior to the application deadline. The Developer must run the additional two ads no later than 10 days after the first ad runs. Any delays must be reported to the Agency.
  e. The Developer must provide the Agency with a copy of the tear sheet immediately after the advertisement runs.

C. APPLICATIONS

✓ **The Marketing Plan must include a sample of the proposed application and cover letter to prospective applicants and samples of the response letters to applicants.**

The Marketing Plan is to include a statement that family members and employees of the Developers and its principals are ineligible to apply for or receive an apartment. The cover letter should reiterate program guidelines and highlight the post office box to which applications may be returned. The format will be provided by the Agency. Any changes to the letter must receive prior approval from the Agency. *See Sample Cover Letter and Application, Attachments G1-3. See also Sample Letters, Attachments H-1 through H-6.*

Additionally, the following subjects should be outlined in order that the Agency may be afforded an opportunity to comment:

- Number and type of units (if this description does not match the original underwriting and unit distribution described in the Regulatory Agreement, then the Developer must bring the discrepancy to the Agency's attention in writing);
- Initial rents or selling price to be charged;
- Minimum and maximum income range for each type of unit;

  **Note: Please contact the Agency if you are unclear about the program's income and rent limits.*
- Listing of proposed fees
  - Applicants shall not be required to pay an application fee, but may be charged a non-refundable credit check fee:
  - For Units with Income Limits set at or below 60% of New York City's Area Median Income (AMI) Limit: The fee is not to exceed **$25** per application (for households consisting of 1 or 2 adult members), or **$50** (for households with 3 or more adult household members).
  - For Units with Income Limits set above 60% of New York City's Area Median Income (AMI) Limit: the fee is not to exceed **$50** per application (for households with 1 or 2 adult members) or **$75** per application (for households with 3 or more adult members).
  - ***Credit fees should only be collected when (a) an applicant appears to be otherwise eligible and (b) it is clear that a unit will be available if the applicant is approved**.
- The Developer's system and procedures for receipt and logging or numbering applications. *See Sample Log Sheet for Rental Units, Attachment J-1 and See Sample Log for Home Units – Attachment J-2. For more information about the logging and receipt of applications, please see the following "Lottery" section.*

III. LOTTERY

- The Agency requires a Compliance Meeting to be held approximately two weeks before the lottery date.

- The lottery will be held on a date or dates mutually agreed by the Developer and Agency, generally seven (7) to ten (10) business days following the close of the application period, if not sooner.

- **An Agency representative must be present at the time of the lock box/post office box opening and at the time applications are opened and logged.**

- Based on anticipated response volume, the Agency will recommend a minimum number of staff or volunteers to be provided by the Developer for the full day of the lottery. The Agency recommends that there be 20-25 staff members per day during a lottery, which may be adjusted by the Agency based on lottery response. Developer staff should be made familiar with the application log process, and freed from any other duties or distractions on the day of the lottery. Additional people made available will maximize the number of applications opened and logged. Agency monitors will be present strictly to observe the opening of applications and completion of the log sheets; they will be unable to assist in the actual opening and logging as not to divert their attention from their oversight responsibilities.

- If more than one day is required for the lottery, remaining applications must be secured in a locker or footlocker (to be provided by the Developer), which can accommodate a standard combination lock. The Agency will provide the lock with a combination known only to Agency staff. This locker or footlocker will be stored by the Developer in a location approved by the Agency monitor and subsequent days of opening and logging must also occur under Agency supervision. At the completion of rent-up/sales, after enough applications have been opened to achieve occupancy and establish a waiting list equal to at least the number of units in the building, any surplus applications will be shredded by the Developer.

A. APPLICATION COLLECTION AND PICK-UP

- The post office box used will be one governed by the United States Postal Service (i.e. not a privately owned business such as “Mailboxes Etcetera,” etc.) and must be located within New York City limits (i.e. New York, Bronx, Kings, Queens or Richmond Counties). The P.O. Box location must be pre-approved by the Agency, as certain branches with a history of problems may be excluded. Protocol for the opening of the P.O. Box varies by agency:
    - HDC will purchase and reserve the P.O. Box, with all charges and fees to be reimbursed by the Developer.
    - HPD will accompany the Developer to the designated post office on the day of the opening to purchase and open the P.O. Box.

- **Applications will be picked up from the P.O. Box on the day of the lottery, generally seven (7) to ten (10) business days following the close of the application period. The applications must be picked up by the Developer in the presence of Agency staff.**

- If the post office requires that letters be picked up on a regular basis due to large volume of mail, the USPS will notify the Agency prior to picking up the mail and the Agency and Developer will place all letters, unopened, in a secure locker or footlocker. The Developer will then return to the post office on the day of the scheduled lottery to pick up, in the presence of Agency staff, any remaining mail.

- On the day of the lottery, Agency staff will meet the Developer at the applicable post office for the opening of the P.O. Box and the gathering of applications. Applications will be transported in the presence of at least one Agency monitor (such transportation to be provided by the Developer) to the identified location provided by the Developer for the opening of the applications.

- Any applications postmarked after the application deadline ("late applications") will be set aside for possible consideration pursuant to this Outline of Procedures, and only after all applications postmarked by the deadline have been processed.

- Any applications received by means other than regular mail (e.g. overnight, certified or registered mail) will be set aside for possible future consideration.

B. LOG GENERATION

- On the initial lottery days scheduled, all applications, or a minimum number of applications equal to **at least fifty (50) times the number of affordable units that are being marketed,** will be opened and entered in a log in the order in which they were randomly opened. All names will then be selected in number order from this log. All subsequent loggings from this applicant pool, unless waived by the Agency, must take place in the presence of Agency staff. **No preferences will be waived unless all applications received on time have been opened**. *For more information on preferences, see Section IV-B "Order of Processing" or Section IV-H-1 "Preferences."*

- The log sheets have been revised in a new format and will be provided by the Agency. Rather than merely logging in the head of household, the names of all household members identified on an application must now be recorded in the log sheets. *See Sample Log Sheet for Rental Units, Attachment J-1 and See Sample Log for Home Units – Attachment J-2.*

- A delineated line must be drawn at the end of the last log page containing all applications received up to the deadline date. Applications received after the deadline date or by other methods, such as overnight, certified or registered mail, are to be logged after the delineated line. *For information on maintaining a*

waiting list, see Section IV-F "Waiting List" or Attachment H-6 for a Sample Waiting List Letter.

- Developer must provide an electronic copy of the log to the Agency immediately after the lottery is completed.

- If the lottery takes more than one (1) day, the Developer must provide a copy of the updated log after each day's logging is completed. In this case, remaining applications must be secured in a locker or footlocker (to be provided by Developer), which can accommodate a standard combination lock. The Agency will provide the lock with a combination known only to the Agency. This locker or footlocker will be stored by the Developer in a location approved by Agency monitors and subsequent days of opening and logging must also occur under Agency supervision. At the completion of rent-up/sales, after enough applications have been opened to achieve occupancy and establish a waiting list equal to at least the number of units in the building, the Developer must shred any surplus applications.

- Developer or representative must also provide copies of the log to the Agency for review indicating each applicant's selection status. **Copies of the log must be provided prior to offering units to eligible applicants.** *For more information about Agency approvals required prior to signing leases and/or contracts, see Section IV-G "Agency Approval."*

- Developer must offer units only to applicants who meet eligibility requirements in numbered order from this log, as long as units of appropriate size are available. An applicant to whom a unit has been offered must be given a reasonable specific amount of time to respond to the offer, and **not less than 5 business days** for a lease signing, before a Developer can proceed to offer a unit to the next eligible applicant on the log.

- If units of appropriate size are unavailable to eligible applicants from the log as they are being reviewed, the applicant's name will remain on the log until an appropriate unit becomes available or until the log expires.

- Developer must retain the applicant log and all associated applications as a record for no less than three (3) years.

Depending on the level of response generated by the lotteries, particularly for low-income developments, it may not be practical to open and process all received applications. However, the Developer must initially open and log a number of applications that is at least fifty (50) times the number of available units. *This must be explained in the cover letter that accompanies the application.* If this pool is sufficient to fulfill all preferences, achieve rent-up/sales, and establish an adequate waiting list, the Agency may not require that additional applications be opened at that time. If preferences cannot be met, additional applications will need to be opened. The Agency will not waive any mandatory preferences unless all received applications have been

processed. Agency staff must be present to supervise the opening and numbering of all applications involved in the initial lottery of a project.

IV. APPLICANT EVALUATION AND RESIDENT SELECTION

The Developer will have primary responsibility for applicant evaluation and resident selection. Developer must select all prospective residents from the log sheet in the order logged in, with exceptions for permitted preferences only. Residents of the City of New York are to be given preference in the selection process over non-residents. Other statutory preferences are outlined below. *See Section IV-H-1 "Preferences."*

- ✓ **The Marketing Plan must specify criteria to be used for resident selection and rejection, along with procedures for handling rejected applications.**

An applicant cannot be rejected for any reason other than a reason that is consistent with the rejection criteria stated in the Marketing Plan. The Agency will approve the selection and rejection criteria outlined in the Marketing Plan prior to the start of marketing. The rejection criteria must be applied fairly and equitably to all applicants.

A. DISQUALIFICATION POLICIES

- No application will be disqualified prior to entering the lottery. Every opened application received will be assigned a unique log number. Disqualification letters, for reasons outlined below, will be processed and sent in order of log number.

- After the lottery, applicants may be disqualified, regardless of other eligibility factors, for one of several reasons:

  - Developer must disqualify those applicants for whom multiple copies of an application are received.

    A "multiple" or "duplicate" application is defined as the appearance of any single applicant across two or more applications for any given project, whether or not the same household members are present.

  - **Developer, employees, agents, employees of agents, and family members of Developer, are prohibited from seeking a unit through the Developer's lotteries or Open Market, and are further prohibited from being considered through any other means for any unit being marketed by this Developer pursuant to this Outline of Procedures, regardless of their position with the firm.**

  - Employees of the Housing Development Corporation (HDC) are prohibited from seeking a unit in any project in which HDC is involved that is being marketed by the agent. *Note: HPD employees who apply for HPD involved projects should receive a Conflict of Interest waiver from HPD.

  - Applicant is not a resident of New York City.

- Applicants may **not** be disqualified on rental projects solely on the basis that the applicant receives Section 8 assistance.

- **Note on Missing Information:**
  Applications with missing required information, such as income or household size, would be processed as such. For instance, applicants without a stated income would be calculated as $0 income, and likewise, unlisted household members would not be calculated. Unless qualified as an "extenuating circumstance," changes to blank income and/or household size would result in an applicant being placed at the bottom of the log for consideration only after all other applications are exhausted.

  Extenuating circumstances include:
  - Death of a member of the household;
  - Birth in the household;
  - Divorce or other spousal situation;
  - Court order of custody.

  Developer must require the applicant to provide evidence of the extenuating circumstance.

B. <u>ORDER OF PROCESSING</u>

- The first applications processed and submitted to the agencies from the log must be those that meet one of the approved housing preferences. The order of preference category must maximize the number of applicants filling the preference categories. Experience suggests that this order, depending on lottery results and other factors, may help boost the filling of preference categories if generally followed:
  (1) Disability
  (2) Community Board
  (3) Municipal Employee

  For more information on processing of preferences, see "Preferences" Section IV-H-1.

- If preferences are not met and there are still unopened applications remaining, another day of opening applications to identify additional preference applicants must be scheduled with the Agency. No preferences will be waived unless all received applications have been opened.

- Only after all preferences have been achieved (or waived by the Agency following the exhaustion of the lottery) may non-preference applications be submitted to the Agency for approval. This is to prevent non-preference applicants from being processed for units that are intended for preference-eligible applicants. The screening of non-preference applicants may begin prior to achieving all preferences with Agency approval.

- If units are still available after the Developer has exhausted all remaining applications, Developer must notify the Agency and randomly open and log a number of "late" applications set aside with the Developer sufficient to tenant the remaining vacancies. The Developer, or a representative, will then follow all procedures as outlined in this Section.

- Applications should be processed for submission to the Agency in groups of fifty (50) to prevent getting too far ahead in the lottery and potentially bypassing eligible applicants who are placed earlier on the log and appeal successfully within the two (2) week appeal timeframe. Even within those groups of fifty (50), attention must be given to remaining available units based on bedroom sizes and (for mixed-income buildings) income levels to allow for such appeals.

- At a minimum, a status report must periodically be issued by the Developer to the Agency to ensure that applicants are being processed in proper order. The report must outline the status of applicants on the log (i.e. if they were rejected the reason must be provided) and must be submitted electronically in an Excel format. Developer therefore must not submit a "Read Only" version. This is to ensure that applicants are being processed in proper order. Such status reports should be issued: (a) upon completion of the preferences before processing the general lottery pool and (b) upon the completion of each group of fifty (50) general lottery applicants thereafter. If a file is submitted for an applicant but there are applicants with lower log numbers whose status have not been confirmed, the agencies will withhold further approvals until the information has been satisfactorily documented. The status report, which must include all status comments, must also be accompanied by a letter reporting on the statistics, such as, but not limited to:
    - Number of logged applicants;
    - Number of units for each preference;
    - Status of each preference;
    - Number rejected for being over income;
    - Number rejected for being under income;
    - Number of applicants that fell within the income ranges; if applicable;
    - Number rejected for credit reasons;
    - Number rejected for criminal history;
    - Number rejected for housing court activity as further described in *Section IV-H-5*;
    - Number rejected for household composition;
    - Number of no-shows (include the no-show dates);
    - # terminated as per applicant's request (applicant withdrew/cancelled application)
    - # rejected for failure to submit requested additional documentation;
    - # rejected for submitting duplicate applications ;
    - # rejected because household is comprised of full-time student(s) and does not meet any of the exceptions (in applicable programs);
    - # rejected because of household size;
    - # placed on low priority list and specify the reasons, e.g. living out of city;
    - any other rejection criteria used by the agent; and Number rejected for

submission of fraudulent information, etc.

- Stats Report Requirement is mandatory so that the Agencies may monitor the process of the lottery log. Further, such stat report information may be used to report on the statistics of the individual project and analysis of its lease-up.

- Developer must notify all applicants processed of their selection status by regular mail as soon as a determination has been made. A copy of the letter must be attached to the application and kept on file.

C. APPEALS

Ineligibility and Rejection Letters to Applicants must provide a specific reason why an applicant cannot be approved. Responses to appeals must be even more specific and detailed. For example, stating, "You are rejected because you are over-income" is not sufficient. The letter would need to state more specifically, as an example, "You have been deemed ineligible for this housing program because you do not meet the maximum income required for your family and unit size. The maximum income is $35,000 and your household's annual income has been determined to be $36,000".

- Developer will provide the Agency with a copy of the completed Log, indicating the final selection status of each applicant and reason for rejection. This includes, but is not limited to:
  - Income ineligibility;
  - Applicant is an employee or family member of Developer;
  - Applicant is not a resident of New York City;
  - Lack of adequate income to support mortgage payments;
  - Ineligible household size;
  - Poor payment or credit history;
  - Receipt of more than one application per household;
  - Falsification of information, etc.

D. INTERVIEWS

- All applicant/prospective tenant interviews, as well as lease signings, must be conducted within New York City limits (i.e. New York, Bronx, Kings, Queens, or Richmond Counties).

- Developer will notify each applicant to be interviewed by regular mail. Format for letter will be provided by the Agency. Letter will indicate:
  - Date, time, location of interview and phone number should applicant be unable to appear;
  - Required minimum amount of time, and **not less than ten (10) business days**, between letter postmark and interview date;

- List of required documents to be brought to interview by applicant;
- That Developer may make home visits or other appropriate inquiries to assist in qualifying;
- That no broker or application fees will be charged to the applicant, except in New HOP programs;
- If credit checks will be conducted by Developer, then that fee must be approved by the Agency.
    - For Units with Income Limits set at or below 60% of New York City's Area Median Income (AMI) Limit: Credit check fees are not to exceed $25 for households with 1 or 2 adult members; $50 for households with 3 or more adult members.
    - For Units with Income Limits set above 60% of New York City's Area Median Income (AMI) Limit: Credit check fees are not to exceed $50 for households with 1 or 2 adult members; $75 for households with 3 or more adult members.
    - No credit check fees may be charged to homeless applicants in designated special needs programs referred by the city.
    - A credit check fee can only be charged after an interview has been conducted and all other threshold selection criteria have been met.

- In cases where an applicant fails to appear for an interview, Developer must send a second letter by regular mail to schedule another interview. The applicant will be given a reasonable specific amount of time, but **not less than five (5) business days** from the postmarked date of the second letter in which to respond.
- *Note: If the Developer elects in the Marketing Plan to perform home visits, such home visits MUST occur before submitting files for approval but after the interview. Further, if an applicant is rejected for a home visit, then the rejection letter must state the reason of the home visit rejection. The letter cannot simply state that the applicant failed the home visit.

E. OPEN MARKETING

If all applications have been processed and the entire applicant log has been reviewed for eligibility and there are still units available, **the Developer must contact the Agency for written approval to commence open marketing.** The Developer is required to complete a **Notice of Remarketing document** *See Notice of Remarketing, Attachment K.* Upon receipt of these forms, the Agency will create an advertisement for its website. Under open marketing, the Developer may utilize other methods to identify applicants beyond the scope of the lottery. Such methods may include additional advertising, signage on the building to attract walk-ins, or the use of brokers.

If using a broker, the Developer must fully absorb any related broker fees. No such fees may be passed on to applicants/residents of units. The exception to this, unless otherwise noted, is with HDC's New HOP programs. In the case of New HOP, a fee equal to half (1/2) of one month's rent is the maximum amount that may be charged to the residents as a broker fee. Any fee above that amount must be absorbed by the Developer.

F. WAITING LIST

After the Project is initially occupied, the Developer must maintain a waiting list indicating persons interested in residing in the development and must fill vacancies from the waiting list. Whenever possible, the Developer must fill vacancies in units that have been adapted for households with disability preferences to a household that fulfills such preference. The Developer is to inform wait-listed applicants that it is the applicant's responsibility to notify the owner/manager every six (6) months that they wish to remain on the waiting list.

Upon conclusion of the rent-up, the Developer must document to the Agency how it plans to manage its waiting list going forward.

When the Developer needs to replenish a Project's waiting list, the Developer may request Agency approval to commence remarketing activity. The Agency does not supervise this process as closely as the initial marketing. However, the attached form must be completed and receive Agency approval before remarketing. *See Notice of Remarketing Attachment K.*

G. AGENCY APPROVAL

No residents may be moved into the building, and no leases or contracts signed, until Agency has approved the applicant in writing. This is true both during initial rent-up or sales and thereafter. Concurrent approvals by other involved agencies may also be required.

Developer may also not collect funds from prospective residents (i.e. security deposits, rents, etc.) until written Agency approval is received.

If files are complete in accordance with the revised procedures which follow, and no additional issues are raised with any of the information contained therein, Agency approval timetable is three (3) to five (5) business days from receipt of a file. However, if files are incomplete or if issues are raised that require further review either internally or with the NYC Department of Investigation (DOI), the process will take as long as necessary to (a) acquire the missing or additional paperwork from the Developer's management staff or (b) to complete an additional review with DOI. On a case-by-case basis, if such processes extend past ten (10) business days without a resolution, the agencies may grant permission to place such questionable applicants on hold and proceed with other applications while such special reviews are being completed. Although an added step, these procedures will both ensure the integrity of the Agency's programs and protect the Developer from the potential regulatory defaults for non-compliance, which can result from admitting applicants who are not truly eligible.

- ✓ **The Marketing Plan must also include procedures for determining applicant eligibility and verifying income and family size.**

HPD and HDC perform independent review of applicant income eligibility as an

additional means of ensuring compliance with the Regulatory Agreement. The approvals are based on information in the files submitted to us by the Developer. HPD will review a percentage of applicants, while HDC will review all applicants. *Refer to Checklist for Tenant Income Certification, Attachment L-1.*

Applicant approval letters are not given under our role as low-income housing tax credit monitoring agencies and so these letters alone are not verification of tax credit compliance. Upon the Developer's annual tax credit certification review (as required by IRS monitoring rules), the Compliance Unit in the respective agencies will review files in their entirety to monitor compliance.

Developer must submit Tenant Income Certification (TIC) and verifications to the Agency along with the Applicant Information Form (AIF) to enable a review of the Developer's computation of eligibility. Developer must inform applicants that they will not be allowed to occupy a unit until the Agency has reviewed and approved their Tenant Income Certification. All such Approvals are given to the Developer in writing. See *Tenant Income Certification Cover Letter, Attachment L-2, See Tenant Income Certification form, Attachment for Low Income Attachment L-3 or Tenant Income Verification for Middle Income Attachment L-4. See also AIF, Attachment M*.

Tenant Lease and Related Documents

- Immediately prior to signing the lease, the statement in Pre-lease Acknowledgement and Certification must be reviewed with, and signed by, all adult household members. *See Pre-Lease Acknowledgement and Certification, Attachment N.* This statement warns against violating the primary residence rule, as well as provides a final confirmation as to the honesty of all information the applicants submitted throughout the process.

- Owners must use a lease that complies with the Rent Stabilization Law and regulations.

- **The Marketing Plan must include a copy of the lease for review.**

- For Projects financed by HDC, owners must execute an HDC lease rider which outlines the unique aspects of the program and how it differs from standard rent stabilization (such as the prohibition on sublets). *See Rider to Standard Rent Stabilization Lease for Low Income, Attachment O or See Rider to Standard Rent Stabilization for Middle Income, Attachment P.*

- If Developer finds an applicant eligible for a unit designated at 60% of AMI or below, then at the time of lease signing, the tenant must complete an Affirmation of Income. *See Affirmation of Income, Attachment Q.*

- If Developer finds an applicant to be eligible for a unit, then at the time of lease signing or sale closing, Developer must require that all adult household members execute three new IRS Form 4506-T, one listing the Developer, one listing the

Agency and the other listing the NYC DOI in Line 5 of the form. *See IRS and State Forms, Attachments R-1 through R-5.*

H. DETAILED SELECTION POLICIES

Additional guidance on evaluation criteria and selection factors is provided on the following pages as follows:

1) Preferences
2) Household Composition Changes to an Application
3) Qualification As A Household
4) Income Eligibility
5) Background Checks And Other Factors
6) Occupancy Standards And Unit Distribution
7) Rent Levels and Income Standards
8) Other

1) PREFERENCES

a. OVERALL RESIDENCY PREFERENCE FOR NEW YORK CITY RESIDENTS

Non-residents of New York City can only be considered after all eligible, current New York City residents have been processed.

b. MANDATORY PREFERENCES

The following must also be considered and detailed in the plan:

- Community Preference

The Developer must, during initial rent-up, give an occupancy preference for fifty percent (50%) of the units to applicants who, at the time of application, are residents of the Community District in which the building is located. Applicants with community resident status must meet all other programmatic requirements of the Agency and the Developer (e.g., income qualification, credit worthiness).

If after all applications have been opened and processed the community preference cannot be filled from applicants in the logbook, the Developer must provide a letter to the Agency stating how much of the preference has been achieved. The letter must include, but is not limited to the following information:

- Number of logged applicants;
- Number of units available for each preference;
- Number of applications approved for each preference;
- Number rejected for being over income;
- Number rejected for being under income;
- Number of applicants that fell within the income gap, if applicable;
- Number rejected for credit reasons;
- Number rejected for criminal history;
- Number rejected for housing court activity as further described in *Section IV-H-5*;
- Number rejected for household composition;
- Number of no-shows (include the no-show dates);
- **#** terminated as per applicant's request (applicant withdrew/cancelled application);
- # rejected for failure to submit requested additional documentation;
- # rejected for submitting duplicate applications;
- # rejected because household is comprised of full-time student(s) and does not meet any of the exceptions (in applicable programs);
- # rejected because of household size;
- # placed on low priority list and specify the reasons, e.g. living out of city;
- any other rejection criteria used by the agent;
- If any of the above rejection criteria does not apply or no applicant had been rejected for that criteria, please indicate "N/A" or "0 applicants", respectively; and
- Number rejected for submission of fraudulent information, etc.

See Stats Report Requirements p. 22-23

After review, the Agency may waive the remainder of this preference and authorize the Developer to proceed with the remainder of the log sequentially. If the community preference is fully achieved, any remaining community applicants will be processed from the log in the same order as other applicants.

- <u>Disability Preferences</u>

The Developer must also give an occupancy preference to applicants for certain units who have at least one household member with a mobility,

visual and/or hearing impairment and, as a result, require an accessible/adaptable unit. These preferences are as follows:

- Five percent (5%) of the units in the project (or one unit, whichever is greater) will have a preference for and are to be made adaptable/accessible for disabled persons with mobility impairments.
- Two percent (2%) of the units (or one unit, whichever is greater) will have a preference for and are to be made adaptable/accessible for disabled persons with visual and/or hearing impairments.

The Developer must write to The Mayor's Office for People with Disabilities to request potential referrals (with a copy to the Agency) at the time community letters are mailed out:

Mayor's Office for People with Disabilities
100 Gold Street, 2nd Floor
New York, NY 10038
Tel (212) 788-2830
Fax (212) 341-9843
TTY (212) 788-2838

If the disability preference is not fulfilled, applicants shall be processed from the logbook in the same order as other applicants.

- Municipal Employee Preference:

The Developer must give an occupancy preference for five percent (5%) of the units (or one unit, whichever is greater) to municipal employees of the City of New York. *See Attachment S for a list of agencies whose employees are eligible for the preferences*. (*Note: HDC employees are not eligible for this preference. Employees of certain other agencies, such as HPD, are only eligible if they can provide a statement of no-conflict from their agency's ethics officer).

c. ADDITIONAL PREFERENCES AND SET-ASIDES:

There may be additional mandatory preferences tied to certain government programs or funding sources. These mandatory set asides are not to be marketed to the general public; however, they are subject to the same selection criteria and application process and must be approved by the Agency.

✓ **The Marketing Plan must reflect such preferences.**

- Referrals:

The Agency may refer to the Developer potential residents who are

being relocated or displaced due to a governmental action. Developer, if directed by the Agency, must first offer units to these referrals, and their applications must be processed according to program selection criteria for eligibility and must be approved by the Agency. Referrals must be entered into a separate log by the Developer or a representative. Developer must indicate the source of the referral on the log.

No additional, optional preferences may be implemented without the prior written approval of the Agency.

2) HOUSEHOLD COMPOSITION CHANGES TO AN APPLICATION

Changes to household composition in the application after it has been received will not be recognized, unless such change is an extenuating circumstance. Extenuating circumstances may include:

- Death of a member of the household;
- Birth in the household;
- Divorce or other spousal situation;
- Court order of custody.

The Developer must obtain from the applicant legitimate evidence of the extenuation circumstance, such as birth certificates.

3) <u>QUALIFICATION AS A HOUSEHOLD</u>

For the purposes of applying to HPD/HDC-financed affordable housing, the following terms shall have the meanings set forth below:

1. "Minor" shall mean a person under the age of 18 years.

2. "Adult" shall mean a person at or above the age of 18 years.

3. "Dependent" shall mean a Minor who is the lawful dependent of an Adult in the Household, as indicated by (i) a court order or other binding document establishing that such Adult is the legal guardian of, or is otherwise responsible for the custody and care of, such Minor, (ii) school records identifying such Adult as such Minor's legal guardian; (iii) written verification from a government agency, or a social service provider under contract to a government agency, confirming the placement of the Minor in the custody and care of such Adult, or (iv) federal or state income tax returns in which such Adult claims such Minor as a dependent.

4. "Guardian" shall mean an adult who is legally responsible for a Dependent.

5. "Immediate Family Member" shall mean, with respect to any person, (i) his or her grandparent, parent or Guardian, child or Dependent (who meets the definition of “Dependent” set forth above), grandchild, sibling, spouse, or domestic partner, and (ii) any of their respective grandparents, parents or Guardians, children or Dependents, grandchildren, siblings, spouses, or domestic partners.

6. "Extended Family Member" shall mean, with respect to any person, (i) his or her Immediate Family Member, and (ii) his or her aunt, uncle, or first cousin, or any of their respective Immediate Family Members.

"Household" shall mean (i) a single person, or (ii) two or more persons who:

(a) are Immediate Family Members;

(b) are Extended Family Members who need to live together in order to support one another with respect to finances, child care, eldercare, medical care, or other extenuating family circumstance, as indicated by self-certifications explaining the family circumstances and needs; or

(c) are financially interdependent, as indicated by (i) current leases or utility records demonstrating a shared address, and (ii) documentation, such as bank accounts, demonstrating shared assets.

If an applicant states that the applicant and his/her spouse are separated, then the Developer must require the applicant to provide “proof of a legitimate separation.” A notarized statement is not sufficient proof of a legitimate separation. Examples of proof of a legitimate separation would be bank accounts or leases once held jointly are now no longer held jointly due to the separation. Both the latter and former documents must be provided to prove that the assets and/or lease were once held jointly but are no longer.

*Note on Student Rule for IRS Program Units: Low-income units in these programs are not to be occupied exclusively by students (for Low-Income housing tax credits, the IRS defines a “student” as a full-time student during five (5) calendar months of the calendar year at an educational institution, other than a correspondence school, with regular faculty and students), unless the household qualifies for an exception under the IRS code.

4) INCOME ELIGIBILITY

Income is determined in the same way income is determined under the federal Section 8 program. Developers should therefore obtain a current copy of the HUD Handbook 4350.3, which outlines these requirements. This handbook is available to print or view at http://www.hud.gov. In addition, the Developer should require its

marketing staff to attend an industry training where these requirements are reviewed in detail.

A1. Assets

GENERAL PROGRAMS

The Developer must require that all adult members of the applicant household complete a certification of assets, which must be signed and notarized. Samples of such certifications are included in this manual. *See Asset Certification, Attachment T.* This form must identify both the specific assets and the actual income earned from the assets (such as the interest rate for a bank savings account).

- If the total value of assets on the certification form is less than $5,000, and such information is consistent with the assets identified on the applicant's housing application, IRS rules for Tax Credit compliance allow that this self-certification is the only documentation required and the identified income generated from the asset is added to employment and other income. *However, it is a common misconception that this IRS rule is intended to exclude income from assets if the total value is under $5,000. The income from assets must still be counted, but if it is under $5,000 no further verification beyond the self-certification is required. The self-certification must still disclose the specific assets and the income from said assets. Accordingly, vague certifications that merely certify that an applicant has less than $5,000 in assets are* ***not*** *acceptable.*
- If the total value of assets equals or exceeds $5,000—or if there is an unexplained difference between the assets noted on the application and those subsequently noted on the certification—complete asset verification documents must be obtained. Refer to HUD Handbook 4350.3 for guidance regarding the appropriate documents to be obtained based on the type of assets being verified. As required under tax credit rules for all verification, documents must be current within 120 days of the tenant income certification (TIC) effective date (which is ultimately the move-in date). When over $5,000 total, the actual earned income from the asset is compared to the imputed value (2% of the total) and the higher of these amounts is added to the household income.

HDC's NEW HOP PROGRAM

Income from assets is only considered when the applicant's income falls within $10,000 of the maximum income level for the unit; however, applicants may submit asset income for consideration if they need it to meet the minimum income. When a household's total annual income is within $10,000 of the program maximum income then all adult members of the applicant household must complete a certification of assets, which must be signed and notarized.

Samples of such certifications are included in this manual and this form must identify both the specific assets and the actual income earned from the assets (such as the interest rate for a bank savings account). *See Asset Certification*, *Attachment T.*

*Note: If a unit is also subject to another governmental subsidy, such as State Tax Credits, that program's governing agency should be consulted regarding any additional or different income and asset requirements. All asset requirements must be disclosed in the Marketing Plan and approved by the agencies.

A2. Employment Income

The Developer must require that for all adult household members reporting general employment income, **all of the following** must be provided:

- *The most recent year's complete tax return.* If after May 1, the most recent year's tax documents due by the preceding April *must* be provided *unless* an applicant provides a copy of his request to the IRS for an extension (IRS Form 4868). In such cases the *previous* year's complete tax return may be accepted until October 15th, when the extension expires. The gross income reflected on the most recent tax return will be "the tax return income".

- *The most recent consecutive pay stubs (minimum of 6).* Income must be calculated by both (a) averaging the pay stubs and (b) projecting the year-to-date. The higher of these two amounts will be "the pay stub income".

- *Third Party Verification directly from the employer.* The Developer must mail or fax this form (*See Attachment Z-1*) directly to the applicant's employer, with instructions for the employer to return directly to the Developer. Envelopes and fax confirmations must be maintained to document that the information was obtained via direct third party procedures, and not transmitted through the applicant's hands. This form will request current salary, year-to-date income, and information about bonuses and anticipated increases. The highest amount calculated based on this information will be "the third party income". An applicant cannot be penalized for the lack of response from his/her employer in completing and returning the verification. However, the Developer must make at least three (3) attempts to obtain such third party employment verification. Developer must also obtain Third Party Verification of Termination directly from previous employers who are listed on the applicant's application and/or previous year's tax return.

- *COMPARISON and DETERMINATION:* Based on the three employment income verification sources above, the Developer must compare the tax

return income, the pay stub income, and the third party income. *The highest of these amounts will be the employment income for the household member.*

- *Note: If an applicant has not filed taxes on reported income, the applicant will not be eligible for Agency-financed housing unless the applicant qualifies for a filing exemption under The Internal Revenue Code (see "Publication 501" on irs.gov). The Agency will not make available its limited housing resources to applicants with income that is required to be reported, but is not being reported, to governmental tax authorities.

- *Note: Unless a compelling argument can be made as to why an applicant's income decreased, the tax return income will be the income calculated if it is the highest. The most obvious exceptions would be a decrease in income due to retirement or disability (or a widowed or divorced applicant whose most recent tax return still showed their spouse's income).

- *Note: The Developer may request in writing that the Agency grant an exception to the above criteria if any other truly extenuating circumstance exists. The Agency will consider such requests on a case-by-case basis.

A3. Self-employment Income

Since self-employment income is more difficult to document via third party and subject to more variables and potential manipulation, special care must be given in the review of such income. The Developer must require that all adult household members reporting self-employment income provide both of the following:

- *Projected Self-Employment Income:* An estimate of current year's earnings certified in (a) a letter from the applicant's accountant, tax preparer or business manager OR (b) a notarized self-statement. If (b), the self –statement must be accompanied by additional documentation such as income receipts, a current financial statement/budget, or other information which supports the projection. This income will be "the projected self-employment income".

- *Historical Self-Employment Income:* Most recent tax returns for the last three (3) years. (*Again, if after May 1, the most recent year due to be filed by the preceding April deadline must be provided unless documentation of an IRS extension filing is provided). If the applicant reported self-employment income in the same line of work for each of the three (3) years, then all three should be averaged *and evaluated.* If only the most recent two (2) years reflect self-employment income in the same

line of work, then those two years should be averaged and evaluated. The income calculated through these averages and evaluations will be "the historical self-employment income".

- *COMPARISON AND DETERMINATION:* The projected and historical incomes are compared, and *the higher amount is what is used as income for the purposes of income eligibility.*

  "Evaluated" means that the Developer must make an effort to identify any patterns that may logically result in a conclusion that the current or next year's income will increase beyond the three (or two) year average. For example, the incomes for the past three (3) years for a self-employed applicant were $30,000; $32,000 and $34,000. The straight average would be $32,000. However, there is a clear pattern reflecting a gradual increase in this income source and so, consistent with that pattern, a logical evaluation of this applicant's income would conclude that $36,000 would be the current/next year's income.

  At least the most recent two years of tax returns must document that the applicant's income has come from self-employment in the same line of work. Applicants who do not meet this "time test" have not established a suitable income-earning history through their self-employment, and there is insufficient data to accurately evaluate their income.

A4. Sporadic Income

Certain forms of income that are sporadic and non-recurring are not considered when calculating maximum household income as they are considered temporary in nature. All sources of income must be disclosed , but such non-recurring income may be excluded in the calculation process.

A5. Unemployed Household Members 18 and over

If a household member, who is 18 years of age or over, is unemployed, then the household member must complete an Unemployment Affidavit. *See Sample Unemployment Affidavit, Attachment I.*

A6. Continuing Need

For programs designed to be affordable for households at or below 60% of AMI, the applicant's eligibility is also dependent on whether the applicant can demonstrate a "continuing need" for housing assistance. Any Agency-subsidized housing development aims to serve individuals and families with a true, continuing need for housing assistance and not those with other financial resources available or those who have a recent history of higher earning power and are only temporarily at an income level eligible for the program.

In determining "continuing need" for these programs, the below criteria must be satisfied, or the tenant is not eligible:

- Asset Cap

The tenant must not have assets in an amount equal to or greater than $250,000 (*Note: This does not include specifically designated retirement funds. A portion of retirement accounts may be counted to determine overall assets and income from assets, but such funds are not to be included in the $250,000 cap.)

- Recent Income History

In addition to reviewing current income verifications, Developers must also evaluate an applicant's most recent income history based on their most recent tax returns. Unless a compelling argument can be made as to why an applicant's income decreased, the tax return income will be the income calculated if it is the highest. The most obvious exceptions would be an increase in income due to retirement or disability (or a widowed or divorced applicant whose most recent tax return still showed their spouse's income).

Here are examples:

The maximum income for a single applicant to Plaza Towers is $30,000.

- Mary Smith is a seamstress who was laid off by her previous employer, where her tax return shows she earned $32,000 a year. Her new employment with a different garment company pays her $28,000 a year as documented by her pay stubs and 3rd party employer letter. *In this case, a compelling argument can be made not to use Mary's tax return income, even though that is the highest amount. The change in Mary's income was not voluntary and her new job/earnings are generally consistent with her recent history. The amount from her current pay stubs and 3rd party should therefore be used, under which she is eligible.*
- John Hower recently quit his job as a college professor, where his tax return shows he earned $75,000 a year, to pursue other interests. He has recently started working as a waiter and presently earns $27,000 a year based on his pay stubs and 3rd party verification. *In this case, no exception is warranted. John has clearly demonstrated a recent history of significantly higher earning patterns. The change appears to be voluntary and/or temporary in nature, which is not the intent of Agency-financed low-income housing programs (including those participating in the LIHTC Program). John is encouraged to apply to our programs in the future, after a minimum of a full year's tax returns as well as current verifications may document a suitable pattern of eligibility.*

The Developer may request in writing that the Agency grant an exception to the above criteria if a truly extenuating circumstance exists. The Agency will consider such requests on a case-by-case basis.

A7. IRS Form 4506-T

The Developer must require all adult household members to execute three copies of IRS Form 4506-T, one for the owner/managing agent identified in line #5, the other for the Agency identified on the same line, and one with the New York City Department of Investigation noted in the same line. This form is a release by which the applicant authorizes the IRS to release transcripts directly to a third party. Furthermore, the applicant must complete an IRS Form 4506 – Request for a Copy of Tax Return, as well as a New York State DTF-505 Form Authorization for Release of Photocopies of Tax Returns and/or Tax Information. In the event that a tax return provided by the applicant appears to have potentially been altered or a file is otherwise suspicious, the Developer should make use of this form. The Agency also may make use of this form. Developers are encouraged to send these requests to the IRS upon receipt, so that in the event that files are flagged later at the Agency, an IRS response may already have been received back. Developer is to ONLY send in their copy. Do not send in Agency or DOI copies of forms.

If an applicant has been found to be eligible for a unit, then at the time of lease signing or sale closing, all adult household members must execute three new IRS Form 4506-T, Form 4506 and DTS-505 Form in accordance with the above. *See IRS and State Forms, Attachments R-1 through R-5.*

A8. Authorization to Release Information Form

The Developer must require that all adult household members execute a copy of the Authorization to Release Information Form.

5) BACKGROUND CHECKS AND OTHER FACTORS

Immigration Status/Credit History

Immigration status is not a condition of eligibility for any HPD- or HDC-financed building. Immigration status may not be questioned in any manner on the application, during the interview, or at any other time during the tenant screening process. This doesn't prevent a Developer from rejecting an applicant for failure to provide a Social Security Number or an Individual Tax Identification Number (TIN) when the Developer needs such information to check credit history. All applicants must be able to provide verifiable proof of legal income. Inability to provide documentation to verify income and credit is a basis for rejection, not immigration status.

Criminal Checks

The Developer must obtain a criminal background check for every applicant.
The Developer must disclose in the project's selection plan which types of information revealed through such a check will or will not adversely impact an

applicant's eligibility. The Developer must find an applicant ineligible if one or both of the following criminal findings is flagged during the criminal background check:

- A prior conviction of fraud in connection to any governmental housing program;
- An applicant is a criminal fugitive being sought by law enforcement for either incarceration or deportation (as such applicants would not lawfully be able to "anticipate" income or even be anticipated to be an included member of the household).

Housing Court Records.

The Developer may not automatically reject an applicant based on the applicant's housing court records. For instance, if the applicant can show that the case was brought about at no fault of their own, the applicant would remain eligible. The Developer must allow a reasonable amount of time, **and not less than 10 days**, for an applicant to contest a housing court record. If the applicant does not provide proof of no fault within the 10 day period, then the Developer may reject the applicant for failing to provide proof of no fault. The applicant then has the allotted time to appeal the decision.

Discovery of False Information

Submitting false or knowingly incomplete information to induce eligibility is grounds for rejection and may also lead to further investigation and, potentially, criminal prosecution.

Even before a file is submitted to the Agency, there are times when Developers may independently detect applicants who have falsified information. For example, the tax transcripts may come back and differ from the provided returns, or provided pay stubs or other documents may be detected as having been tampered with. In all such cases, this fraud (or potential fraud) must be reported. Even if it is detected early and does not result in the applicant receiving a unit, the attempt of fraud itself must be reported. Developers and their agents may report such findings to the Agency or, if they prefer, directly to The NYC Department of Investigation.

6) OCCUPANCY STANDARDS AND UNIT DISTRIBUTION

Occupancy Guidelines

The Developer must establish occupancy criteria based on unit size. Such criteria must be consistent with federal, state and local laws and with the Agency Regulatory Agreement. HUD has provided some guidance for establishing these criteria in the HUD Handbook 4350.3, Chapter 3, and Paragraph 3-23. This guidance states in part that, generally, a two person per bedroom standard is acceptable. However, it makes the following important distinction:

Owners must avoid making social judgments on a family's sleeping arrangement.

For example, it is not for the owner to determine whether an unmarried couple may share the same bedroom or whether a young child can share a bedroom with a parent.

In keeping with the above guidance, to maximize the utilization of its affordable units (another point considered in HUD's guidance) it is clear that married or similarly committed couples are intended to share one bedroom. Apart from that, however, if a family (a) qualifies as a household as defined in these Marketing Guidelines and (b) qualifies by both number of persons and income for more than one unit size, then it should generally be that family's decision as to which unit size they choose. The only additional exceptions would be certain programs, which may have statutorily imposed occupancy standards.

- ✓ **The Marketing Plan must clearly outline the Developer's occupancy criteria and associated statutory requirements.**

Unit Distribution

See Attachment U, Sample Apartment Distribution Chart.

The allocation of units (total number and number for each unit size) must match the information in the Agency Regulatory Agreement. For mixed-income buildings, please also note the following requirement pertaining to the distribution of units:

For 80/20 and other mixed-income developments only:
As soon as any of the units in the development are available for occupancy, at least twenty percent of those units must be occupied, or made continuously available for occupancy, by low-income households. The Developer is not to segregate or physically isolate the low-income units from those units not occupied by low-income tenants. Low-income tenants must be reasonably dispersed throughout the development. The Developer must also ensure that approximately twenty percent of each unit type (i.e. studio, one-bedroom, two-bedroom units) is low-income.

*Note: Distribution of all affordable units must be approved by the Agency.

7) RENT LEVELS AND INCOME STANDARDS:

Rents:

The Developer must establish the rents in accordance with the Agency Regulatory Agreement.

Maximum Income Levels:

The Agency will provide tenant income eligibility levels as modified by household size.

Minimum Income Levels:

Minimum income levels are established by the Developer based on the rent levels. However, the standard barometer for affordability is a family paying 30% of household income for rent purposes. In no instance should the minimum income established for initial rent-up result in a family paying more than 35% of income for rent. Although established by the Developer, minimum income levels are subject to approval by the Agency. However, the Developer may not establish minimum income levels for applicants with Section 8 or similar forms of housing subsidy. Such applicants must be accepted provided they meet all other eligibility criteria outlined in the marketing plan.

FOR LOW INCOME HOUSING TAX CREDIT COMPLIANCE:

Mixed-income projects participating in low income housing tax credit program, must elect designation as either "deep rent skewed" or "non-deep rent skewed" when they are originally placed in service.

Deep Rent Skewed Properties

Properties that Deep Rent Skew must have at least 15 percent of all the low income units occupied with tenants with incomes that are 40 percent or less of area gross median income and rents are restricted.

For properties that Deep Rent Skew, the Available Unit Rule must be implemented whenever a current household has an income level exceeding 170% of the current income limit. The Available Unit Rules states that if a tenant's income increases to over 170% of the then-current income limit for the unit occupied by such tenant, the unit may continue to be deemed a low income unit provided the Developer rents the next available low income unit at the property to a family with an income equal to or below 40% of the area gross median (AMI) income at a restricted rent.

When a Developer of a property that Deep Rent Skews submits a re-rental file for Agency review, then the Developer must submit a Deep Rent Skew Certification, *Attachment V-1* along with the file.

Mixed-Income / "Non-deep rent skewed" properties

A Mixed-Income building is a building that includes market-rate units. For buildings that are Mixed-Income, the Available Unit Rule must be implemented whenever a current tenant has a household income level exceeding 140% of the current income limit. If a Developer discovers that a tenant's income is above 140% of the current income limit, the Developer may continue to include the unit in the applicable fraction if the Developer rents the next available unit of comparable or smaller size in the same building to a tax credit eligible family at a restricted rent.

When a Developer of a Mixed-Income building submits a re-rental file for Agency review, then the Developer must submit a Mixed-Income Certification, *Attachment V-2* along with the file.

8) OTHER

Incorporation of "Fair Housing Laws"

There are Federal, State and local laws, orders and regulations prohibiting housing discrimination ("Fair Housing Laws"). Such Fair Housing Laws, as they may be amended from time to time, are hereby explicitly incorporated in these Procedures, any violation thereof will be a violation of these procedures.

Amendments

The Agency reserves the right to amend any provision of these procedures.

Inspections

The Agency reserves the right to conduct periodic inspections and spot-checks of the Developer's marketing budget and procedures.

Brokers

The Broker Forms, Attachments R-7 and R-8 are to be completed and submitted with all applicant files that are not from the original lottery. If a project has gone "Open Market," then the appropriate form must be completed by the Managing Agent or the Developer. If a new project that is still in its initial lease up goes "Open Market," then the appropriate form must be submitted for all applicants not received from the lottery. The Third Party/Broker form does not need to be submitted for an applicant from the initial lottery.

Household Student Status Affidavit at Recertification

For units with income limits set at or below 60% of New York City's Area Medium Income (AMI) Limit, please use Attachment Z-2 during the Annual Recertification process.

SUBMISSIONS AND ONGOING REPORTING REQUIREMENTS

NYC HDC
NEW YORK CITY
HOUSING DEVELOPMENT
CORPORATION

NYC
Department of
Housing Preservation
& Development

Both HPD and HDC require submission of the following items during the pre-marketing and marketing periods:

- Marketing Plan (to include all required information as described herein). *See Marketing Plan Checklist, p. 10.*
- Applicant Information Forms (AIF) and Tenant Income Certifications (TIC) completed by applicants and Developer. *See Attachments M and L1 – L4.*

Only HDC requires submission of the following items during the pre-marketing and marketing periods:

- The form of lease and all riders for Agency review. Additionally, the Pre-lease Acknowledgement and Certification and the HDC Lease Rider is to be used with all units. *See Attachments N, O and P.*
- In addition to Tenant Income Certifications, HDC projects require all documentation verifying income eligibility and family size. These certifications and verification documents, along with the Tenant Income Certification Submission Cover Letter, must be immediately forwarded to HDC for review *prior* to the anticipated dates of acceptance of the tenant and the signing of the lease.

  For vacancies subsequent to initial project occupancy, the required Tenant Income Certifications and supporting documents must be transmitted for HDC review and approval prior to the signing of the lease.

  Applicants must be informed by the owner that they will not be allowed to occupy a unit until HDC has reviewed and approved their Tenant Income Certification (TIC).
- Owner certification indicating the move-in date for the first tenant to occupy the development. (Once you have submitted this form for the "first tenant that occupies a unit in the project," it does not have to be used thereafter.) *See Attachment W.*
- Unit Inspection Forms must be executed by approved residents and the owner and placed in the tenant's file. This file must be kept at the management office. *See Attachment X.*
- After the initial lease-up of all the units in the project, certain obligations pertain to the project. In particular, Developers must submit on a quarterly basis, the move-out and/or unit transfer status report for the project along with the current rent roll. *See the Quarterly Unit Vacancy Report Instructions and Report, Attachment Y-1 and Y-2*.

ATTACHMENTS

NYC HDC
NEW YORK CITY
HOUSING DEVELOPMENT
CORPORATION

NYC
Department of
Housing Preservation
& Development

MARKETING GUIDELINES – LIST OF ATTACHMENTS

A-1. Site Sign Request Form
A-2. Web Site Posting Form

B. Marketing Plan Summary Sheet

C. Notice of Intent to Begin Marketing

D. Community Contact Letters

E. Outline for Management Plan

F-1. Advertisement Instructions
F-2. Sample Advertisement
F-3. Routing Slip of Advertisement Approvals
F-4. Evidence of AFHM
F-5. HUD 935.2a Form

G-1. Application Cover Letter (Low Income)
G-2. Application Cover Letter (Middle Income)
G-3. Sample Application

H-1. Sample Eligibility and Interview Letter
H-2. Sample Ineligibility Letter
H-3. Sample Approval Letter
H-4. Sample Rejection Letter
H-5. Sample Low Priority Letter
H-6. Sample Wait List Letter

I. Sample Unemployment Affidavit

J-1. Log Sheet Sample (Rental)
J-2. Log Sheet Sample (Home)

K. Notice of Remarketing

L-1. Checklist for Income Cert
L-2. TIC Submission Cover Letter
L-3. TIC (Low Income)
L-4. TIC Middle Income

M. AIF

N. Pre-lease Acknowledgement

O. HDC Lease Rider (Low Income)

P. HDC Lease Rider (Middle Income)

Q. Reaffirmation of Income

R-1. IRS Form 4506-T (HDC)
R-2. IRS Form 4506-T (Agent)
R-3. IRS Form 4506-T (DOI)
R-4. IRS 4506 (DOI)
R-5. NYS DTF-505 Form (DOI)
R-6. Authorization to Release Information
R-7 & R-8. Broker / Third Party Certification

S. List of Agencies Eligible for Municipal Preference

T. Asset Certification

U. Unit Distribution Chart

V-1. Certification for Deep Rent Skewed Projects
V-2. Certification for Mixed Income / "Non-Deep Rent Skewed" Projects

W. Owner Cert of Initial Move-In

X. Unit Inspection Form

Y-1. Quarterly Vacancy Report Instructions
Y-2. Quarterly Unit Vacancy Report

Z-1. Employment Verification Form
Z-2. Household Student Status Affidavit at Recertification

APPENDIX I:
Equal Opportunity

THE CITY OF NEW YORK
OFFICE OF THE MAYOR
NEW YORK, N.Y. 10007

EXECUTIVE ORDER NO. 50

APRIL 25, 1980

BUREAU OF LABOR SERVICES

By the power vested in me as Mayor of the City of New York, it is hereby ordered:

Section 1. Purpose. It is the purpose of this Order to ensure compliance with the equal employment opportunity requirements of City, State and Federal law in City contracting.

§ 2. Bureau Continued. The Bureau of Labor Services shall continue to serve such purposes and to have such responsibilities as restated by this Order.

§ 3. Definitions. Whenever used in this Executive Order, the following terms shall have the following meanings:

(a) Bureau means the Bureau of Labor Services;

(b) construction project means any construction, reconstruction, rehabilitation, alteration, conversion, extension, improvement, repair or demolition of real property contracted by the City;

(c) contract means any written agreement, purchase order or instrument whereby the City is committed to expend or does expend funds in return for work, labor, services, supplies, equipment, materials, or any combination of the foregoing;

amended E.O. 94

(i) Unless otherwise required by law, the term "contract" shall include any City grant, loan, guarantee or other City assistance for a construction project.

(ii) The term "contract" shall not include:

(A) contracts for financial or other assistance between the City and a government or government agency;

(B) contracts, resolutions, indentures, declarations of trust, or other instruments authorizing or relating to the authorization, issuance, award, and sale of bonds, certificates of indebtedness, notes or other fiscal obligations of the City, or consisting thereof; or

(C) employment by the City of its officers and employees which is subject to the equal employment opportunity requirements of applicable law.

(d) contracting agency means any administration, board, bureau, commission, department or other governmental agency of the City of New York, or any official thereof, authorized on behalf of the City to provide for, enter into, award or administer contracts;

(e) contractor means a person, including a vendor, who is a party or a proposed party to a contract with a contracting agency, first-level subcontractors of supply or service contractors, and all levels of subcontractors of construction contractors;

(f) Director means the Director of the Bureau of Labor Services;

(g) economically disadvantaged person means a person who, or a member of a family which, is considered economically disadvantaged under applicable law.

(h) employment report means a report filed by a contractor containing information as to the employment practices, policies and programs, employment statistics and collective bargaining agreements, if any, of the contractor in such form as the Bureau may direct by regulation;

(i) equal employment opportunity means the treatment of all employees and applicants for employment without unlawful discrimination as to race, creed, color, national origin, sex, age, handicap, marital status, sexual orientation or affectional preference in all employment decisions, including but not limited to recruitment, hiring, compensation, training and apprenticeship, promotion, upgrading, demotion, downgrading, transfer, lay-off and termination, and all other terms and conditions of employment except as provided by law;

(j) trainee means an economically disadvantaged person who qualifies for and receives training in one of the construction trades pursuant to a program other than apprenticeship programs, approved by the Bureau and, where required by law, the State Department of Labor or the United States Department of Labor, Bureau of Apprenticeship and Training.

§ 4. Responsibilities of Bureau. The responsibilities of the Bureau shall be as follows:

(a) To implement, monitor compliance with, and enforce this Order and programs established pursuant to City, State and Federal law requiring contractors to provide equal employment opportunity;

(b) To implement, monitor compliance with, and enforce on-the-job training requirements on construction projects;

(c) To monitor compliance by contractors with State and Federal prevailing wage requirements where required;

(d) To advise and assist contractors and labor unions with respect to their obligations to provide equal employment opportunity;

(e) To advise and assist persons in the private sector with respect to employment problems;

(f) To establish advisory committees, including representatives of employers, labor unions, community organizations and others concerned with the enforcement of this Order; and

(g) To serve as the City's principal liaison to Federal, State and local contract compliance agencies.

§ 5. Contract Provisions.

(a) Equal Employment Opportunity. A contracting agency shall include in every contract to which it becomes a party such provisions requiring the contractor to ensure equal employment opportunity as the Bureau may direct by regulation.

(b) On-the-Job Training. A contracting agency shall include in every contract concerning a construction project to which it becomes a party such provisions requiring the contractor to provide on-the-job training for economically disadvantaged persons as the Bureau may direct by regulation.

(c) Subcontractors. A contracting agency shall include in every contract to which it becomes a party such provisions requiring the contractor not to discriminate unlawfully in the selection of subcontractors as the Bureau may direct by regulation.

§ 6. Employment Reports.

(a) Submission Requirements. No contracting agency shall enter into a contract with any contractor unless such contractor's employment report is first submitted to the Bureau for its review. Unless otherwise required by law, an employment report shall not be required for the following:

(i) a contract in the amount of $50,000 or less;

(ii) an emergency contract or other exempt contract except as the Bureau may direct by regulation; and

(iii) a contract with a contractor who has received a certificate of compliance with the equal employment opportunity requirements of applicable law from the Bureau, or an appropriate agency of the State of New York or the United States within the preceding twelve months, except as the Bureau may direct by regulation.

(b) Bureau Review. The Bureau shall review all employment reports to determine whether contractors are in compliance with the equal employment opportunity requirements of City, State and Federal law and the provisions of this Order. The contracting agency shall transmit the employment report to the Bureau within ten business days after the selection of a proposed contractor. A contracting agency may thereafter award a contract unless the Bureau gives prior written notice to the contracting agency and the contractor as follows:

(i) If the Bureau notifies the contracting agency and the contractor within five business days after the receipt by the Bureau of the employment report that the contractor has failed to submit a complete employment report, the Director may require the contracting agency to disapprove the contractor unless such deficiency is corrected in a timely manner;

(ii) If the Bureau notifies the contracting agency and the contractor within fifteen business days of the receipt by the Bureau of the completed employment report that the Bureau has found reason to believe that the contractor is not in substantial compliance with applicable legal requirements and the provisions of this Order, the Bureau shall promptly take such action as may be necessary to remedy the contractor's noncompliance as provided by this Order.

Provided that a contracting agency may award a requirements contract or an open market purchase agreement prior to review by the Bureau of the contractor's employment report, but may not make a purchase order against such contract or agreement until it has first transmitted such contractor's employment report to the Bureau and the Bureau has completed its review in the manner provided by this Section.

(c) Employment Program. The Bureau may require a contractor to adopt and adhere to a program designed to ensure equal employment opportunity.

(d) Periodic Reports. Contractors shall file periodic employment reports after the award of a contract in such form and frequency as the Bureau may direct by regulation to determine whether such contractors are in compliance with applicable legal requirements and the provisions of this Order.

§ 7. Training Programs. The Bureau shall monitor the recruitment, training and placement of economically disadvantaged persons in on-the-job training programs on construction projects. Contracting agencies shall require contractors to make a good faith effort to achieve the ratio of one trainee to four journey-level employees of each craft on each construction project.

(a) The Bureau shall determine the number of trainees and hours of training required by each contractor or subcontractor for each construction project.

(b) In the event that a contractor fails to make a good faith effort to train the required number of individuals for the required amount of hours, the Bureau, after consultation with the contracting agency, shall direct such agency to reduce the contractor's compensation by an amount equal to the amount of wages and fringe benefits which the contractor failed to pay to trainees.

(c) On-the-job training of economically disadvantaged persons shall not be required on construction contracts in the amount of $125,000 or less.

§ 8. Compliance Investigations and Hearings. The Bureau shall conduct such investigations and hold such hearings as may be necessary to determine whether contractors are in compliance with the equal employment opportunity requirements of City, State and Federal law and the provisions of this Order.

(a) Voluntary Compliance. The Bureau shall seek to obtain the voluntary compliance of contractors and labor unions with applicable legal requirements and the provisions of this Order.

(b) Noncompliance. Upon receiving a complaint or at its own instance, the Bureau shall determine whether there is reason to believe a contractor is not in compliance with applicable legal requirements and the provisions of this Order.

(c) Hearings. The Bureau shall hold a hearing on prior written notice to a contractor and the contracting agency before any adverse determination is made with respect to such contractor's employment practices or imposing any sanction or remedy for noncompliance with applicable legal requirements and the provisions of this Order. The hearing shall be held before a City hearing officer, or such other person designated by the Director, who shall submit a report containing findings of fact and recommendations to the Director. Based on the record as a whole, the Director shall determine whether a contractor has failed to comply with applicable legal requirements or the provisions of this Order and the appropriate sanctions for noncompliance.

(d) Notices. The Bureau shall give prior notice of any hearing and shall provide a copy of any hearing report and determination of the Director under paragraph (c) of this Section to the contracting agency, the Corporation Counsel and the Comptroller. The Bureau shall notify appropriate City, State and Federal agencies of violations of law and may, with the approval of the Corporation Counsel, initiate proceedings in such agencies.

§ 9. Sanctions and Remedies. After making a determination that a contractor is not complying with applicable legal requirements and the provisions of this Order, the Director may direct that such sanctions as may be permitted by law or contractual provisions be imposed, including the disapproval of a proposed contractor, the suspension or termination of a contract and the reduction of a contractor's compensation, except as follows:

(a) Within five business days of the issuance of a determination by the Director under Section 8(c), a contracting agency head may file with the Director written objections to the sanctions to be imposed. Where such objections have been filed, the Director and the contracting agency head shall jointly determine the appropriate sanctions to be imposed.

(b) In lieu of any of the foregoing sanctions, the Director may require a contractor to adopt and adhere to a program to ensure equal employment opportunity.

§ 10. Public Agencies. Any administration, board, bureau, commission, department or other public agency, not subject to this Order, which imposes by rule, regulation or order equal employment opportunity requirements, may, with the consent of the Mayor, delegate such responsibilities to the Bureau as may be consistent with this Order.

§ 11. Confidentiality. To the extent permitted by law and consistent with the proper discharge of the Bureau's responsibilities under this Order, all information provided by a contractor to the Bureau shall be confidential.

§ 12. Regulations. The Bureau shall promulgate such regulations, subject to the approval of the Mayor, as may be necessary to discharge its responsibilities under this Order, including regulations increasing the dollar amounts referred to in this Order. Any regulations of the Bureau establishing terms and conditions for contractors shall be approved as to form by the Corporation Counsel.

EQUAL EMPLOYMENT OPPORTUNITY

This contract is subject to the requirements of Executive Order No. 50 (1980) as revised ("E.O.50") and the Rules and Regulations promulgated thereunder. No contract will be awarded unless and until these requirements have been complied with in their entirety. By signing this contract, the contractor agrees that it:

(1) will not engage in any unlawful discrimination against any employee or applicant for employment because of race, creed, color, national origin, sex, age, disability, marital status or sexual orientation with respect to all employment decisions including, but not limited to, recruitment, hiring, upgrading, demotion, downgrading, transfer, training, rates of pay or other forms of compensation, layoff, termination, and all other terms and conditions of employment;

(2) the contractor agrees that when it subcontracts it will not engage in any unlawful discrimination in the selection of subcontractors on the basis of the owner's race, color, creed, national origin, sex, age, disability, marital status or sexual orientation;

(3) will state in all solicitations or advertisements for employees placed by or on behalf of the contractor that all qualified applicants will receive consideration for employment without unlawful discrimination based on race, creed, color, national origin, sex, age, disability, marital status or sexual orientation, or that it is an equal employment opportunity employer;

(4) will send to each labor organization or representative of workers with which it has a collective bargaining agreement or other contract or memorandum of understanding, written notification of its equal employment opportunity commitments under E. O. 50 and the rules and regulations promulgated thereunder; and

(5) will furnish all information and reports including an Employment Report before the award of the contract which are required by E. O. 50, the rules and regulations promulgated thereunder, and orders of the Director of the Bureau of Labor Services ("Bureau"), and will permit access to its books, records and accounts by the Bureau for the purposes of investigation to ascertain compliance with such rules, regulations, and orders.

The contractor understands that in the event of its noncompliance with the nondiscrimination clauses of this contract or with any of such rules, regulations, or orders, such noncompliance shall constitute a material breach of the contract and noncompliance with the E.O. 50 and the rules and regulations promulgated thereunder. After a hearing held pursuant to the rules of the Bureau, the Director may direct the imposition by the contracting agency held of any or all of the following sanctions:

(i) disapproval of the contractor;
(ii) suspension or termination of the contract;
(iii) declaring the contractor in default; or
(iv) in lieu of any of the foregoing sanctions, the Director may impose an employment program.

The Director of the Bureau may recommend to the contracting agency head that a Board of Responsibility be convened for purposes of declaring a contractor who has repeatedly failed to comply with E.O. 50 and the rules and regulations promulgated thereunder to be nonresponsible.

The contractor agrees to include the provisions of the foregoing paragraphs in every subcontract or purchase order in excess of $50,000 to which it becomes a party unless exempted by E.O. 50 and the rules and regulations promulgated thereunder, so that such provisions will be binding upon each subcontractor or vendor. The contractor will take such action with respect to any subcontract or purchase order as may be directed by the Director of the Bureau of Labor Services as a means of enforcing such provisions including sanctions for noncompliance.

The contractor further agrees that it will refrain from entering into any contract or contract modification subject to E.O. 50 and the rules and regulations promulgated thereunder with a subcontractor who is not in compliance with the requirements of E.O. 50 and the rules and regulations promulgated thereunder."

THE CITY OF NEW YORK
OFFICE OF THE MAYOR
NEW YORK, N.Y. 10007

Executive Order No. 108
December 29, 1986

Amendment of Executive Order No. 50
(April 25, 1980)

BUREAU OF LABOR SERVICES

By the power vested in me as Mayor of the City of New York, it is hereby ordered:

Section 1. Prior Order Amended.

a. Section 6(a) of Executive Order No. 50, dated April 25, 1980, is amended to read as follows:

"Submission Requirements. No contracting agency shall enter into a contract with any contractor unless such contractor's employment report is first submitted to the Bureau for its review. Unless otherwise required by law, an employment report shall not be required for the following:

(i) a construction contract in the amount of less than $1 million; a construction subcontract in the amount of less than $750,000; or a supply and service contract in the amount of $50,000 or less or of more than $50,000 in which the contractor employs fewer than 50 employees at the facility or facilities involved in the contract;

(ii) an emergency contract or other exempt contract except as the Bureau may direct by regulation; and

(iii) a contract with a contractor who has received a certificate of compliance with the equal employment opportunity requirements of applicable law from the Bureau within the preceding twenty-four months, or an appropriate agency of the State of New York or of the United States within the preceding twelve months, except as the Bureau may direct by regulation."

b. Section 7(c) of such Order is amended to read as follows:

"On-the-job training of economically disadvantaged persons shall be required on all construction contracts covered by the submission requirements of this Order."

Section 2. Effective Date. This Order shall take effect immediately, but shall have no retrospective effect with respect to the two (2) year approval period provided for in Section 1(a) of this Order, amending Section 6(a) (iii) of Executive Order No. 50, dated April 25, 1980.

Edward I. Koch
MAYOR

JUN 23 1986

THE CITY OF NEW YORK
OFFICE OF THE MAYOR
NEW YORK, N.Y. 10007

Executive Order No. 94
June 20, 1986

Amendment of Executive Order No. 50
(April 25, 1980)

BUREAU OF LABOR SERVICES

By the power vested in me as Mayor of the City of New York, it is hereby ordered:

Section 1. Prior Order Amended.

a. Section 1 of Executive Order No. 50, dated April 25, 1980, is amended to read as follows:

"Purpose. It is the purpose of this Order to ensure equal employment opportunity in City contracting."

b. Section 3(i) of such Order is amended to read as follows:

"equal employment opportunity means the treatment of all employees and applicants for employment without unlawful discrimination as to race, creed, color, national origin, sex, age, disability, marital status or sexual orientation in all employment decisions, including but not limited to recruitment, hiring, compensation, training and apprenticeship, promotion, upgrading, demotion, downgrading, transfer, lay-off and termination, and all other terms and conditions of employment;"

c. Section 5(a) of such Order is amended to read as follows:

"Equal Employment Opportunity. A contracting agency shall include in every

contract to which it becomes a party such provisions requiring the contractor to ensure equal employment opportunity as the Bureau may direct, consistent with this Order."

d. Section 12 of such Order is amended to read as follows:

"Regulations. The Bureau shall promulgate such regulations, subject to the approval of the Mayor, as may be necessary to discharge its responsibilities under this Order, including regulations increasing the dollar amounts and number of employees referred to in this Order. Any regulations of the Bureau establishing terms and conditions for contractors shall be approved as to form by the Corporation Counsel.

Nothing contained herein shall be construed to bar any religious or denominational institution or organization, or any organization operated for charitable or educational purposes, which is operated, supervised or controlled by or in connection with a religious organization, from limiting employment or giving preference to persons of the same religion or denomination or from making such selection as is calculated by such organization to promote the religious principles for which it is established or maintained. The regulations shall set forth this exemption for religiously-sponsored organizations and provide for the discharge of the Bureau's responsibilities in a manner consistent with such exemption."

Section 2. Effective Date. This Order shall take effect immediately.

Edward I. Koch
MAYOR

§ 13. Annual Report. The Bureau shall submit an annual report to the Mayor concerning its responsiblities under this Order.

§ 14. Separability. If any provision of this Order or the application thereof is held invalid, the remainder of this Order and the application thereof to other persons or circumstances shall not be affected by such holding and shall remain in full force and effect.

§ 15. Revocation of Prior Orders. Executive Orders No. 71 (1968), No. 20 (1970), No. 23 (1970), No. 27 (1970), No. 31 (1971), No. 74 (1973), No. 7 (1974), and No. 80 (1977) are hereby revoked and the first paragraph of Section 2 of Executive Order No. 4 (1978) is hereby deleted. Nothing in this Order shall be deemed to relieve any person of any obligation not inconsistent with this Order assumed or imposed pursuant to an Order superseded by this Order.

§ 16. Effective Date. This Order shall take effect immediately.

EDWARD I. KOCH
MAYOR

APPENDIX J:
Proposal Forms

Form A: Completeness Checklist and Applicant's Letter

A1 – Completeness Checklist (Tab A)

Before completing the following forms, please see instructions in **Section IX (Submission Requirements)**.

Tab	Form	✔
A	**Completeness Checklist and Applicant's Letter**	
	1. Completeness Checklist (Form A-1)	
	2. Applicant's Letter (Form A-2)	
B	**Project Summary and Project Narrative**	
	1. Proposal Narrative (*provided by Applicant*)	
	2. Proposal Summary (Form B)	
C	**Applicant Description**	
	1. Development Team Information and Applicant Questionnaire (Form C-1)	
	2. Not-For-Profit Organization Form (Form C-2)	
	3. Additional Evidence of Experience and Qualifications (*provided by Applicant*)	
D	**Development Experience, Management Experience and Current Workload**	
	1. Residential Development Experience and Current Workload (Form D-1)	
	2. Residential Management Experience and Current Workload (Form D-2)	
	3. Management Questionnaire (Form D-3)	
E	**Assets Statement**	
	1. Assets Statement (Form E or alternate statements)	
F	**Development Schedule** (*provided by Applicant*)	
G	**Design Team Experience & Narrative** (*provided by Applicant*)	
H	**Architectural Submission** (*provided by Applicant)*	
I	**Sustainability and Resiliency**	
	1. Narrative (*provided by Applicant*)	
	2. 2015 Enterprise Green Communities Overlay for HPD Projects (Appendix G)	
J	**Environmental Proposal**	
K	**Financing Proposal**	
	1. Financing Proposal (Form K)	
	2. Financing Narrative (*provided by Applicant*)	
L	**Financing Letters of Interest** (*provided by Applicant*)	
M	**Commercial/Retail and Community Facility Plan** (*provided by Applicant, if applicable*)	
N	**Marketing Plan** (*provided by Applicant*)	
O	**Local Hiring / *HireNYC*** *(provided by Applicant)*	
P	**Minority and Women Business Enterprise (MWBE)** *(provided by Applicant, if applicable)*	

Q	**Trade Secrets** *(provided by Applicant, if applicable)*	

NYC Department of Housing Preservation and Development
Office of Development
100 Gold Street, Room 9X
New York, NY 10038
Attention: Evan Easterbrooks-Dick

Re: Proposal in Response to SustaiNYC RFP

Dear Mr. Easterbrooks-Dick:

This letter is being submitted in connection with my proposal ("Proposal") submitted in response to the Request for Proposals ("RFP") issued by the Department of Housing Preservation and Development ("HPD") of the City of New York ("City") for the SustaiNYC RFP in East Harlem, Manhattan.

I have received, read, and understand the provisions of the RFP. I understand that selection of an Applicant ("Applicant") under the RFP for disposition of the Development Site and the development of the Project described in the RFP ("Project") will mean only that HPD will commence negotiations with such Developer regarding the development of the Development Site.

I recognize that any negotiations with HPD will be subject to the following terms and conditions:

1. The commencement of negotiations will not represent any obligation or agreement on the part of the City, which may only be incurred or entered into by a written agreement which has been (i) approved as to form by the City's Law Department, (ii) approved by the Mayor after a hearing on due notice; and (iii) duly executed by the Applicant and the City. The Negotiation Letter will only indicate HPD's intention to commence negotiations, which may ultimately lead to the execution of such an agreement.

2. The Applicant will not have permission to enter upon the Development Site, which permission will only be granted, if at all, in the form of a license agreement duly executed by the Applicant and the City. The execution of any such license agreement, if it occurs, will only indicate that the City has granted permission for the Applicant to enter onto the Development Site for the limited purposes stated in the scope of work set forth therein, and will not indicate that the City reached any other agreement with the Applicant regarding the Development Site or the Project.

3. The following requirements will have to be satisfied prior to the disposition of the Development Site:

   The disposition of the Development Site and tax exemptions to be granted, if any, must be reviewed and approved in accordance with all applicable HPD and City policies, which include, but are not limited to, the following:

a. The Applicant, any other potential grantee of the Development Site, and their respective Principals must successfully undergo a background check concerning their suitability to do business with the City.

b. The Development Site will not be sold to any person or entity which, or to any entity with a Principal who: (i) has not fulfilled development responsibilities undertaken in connection with the City or other governmental entities, (ii) is in default on any obligations to the City, (iii) is a former owner of the Development Site, or (iv) has lost real property to the City in tax or lien enforcement proceedings.

c. The price and other terms for the disposition of the Development Site and the tax exemption(s) to be provided, if any, will be consistent with applicable City policies.

d. The grantee must execute legal documents in form and substance acceptable to HPD and in form approved by the City's Law Department.

4. During negotiations, the Applicant must diligently, competently, and expeditiously comply with all requirements communicated to the Applicant by HPD.

5. The design of the Project must comply with any applicable HPD development requirements and guidelines.

6. Either HPD or the Applicant may terminate negotiations at any time with or without cause. Negotiations may be terminated if Applicant does not commence construction within eighteen (18) months from the date of the Negotiation Letter.

7. If negotiations are terminated by either HPD or the Applicant, whether with or without cause, or if negotiations terminate automatically, then neither the City nor the Applicant will have any rights against or liabilities to the other.

8. The City is not obligated to pay, nor will it in fact pay, any costs or losses incurred by the Applicant at any time, including, but not limited to, the cost of: (i) any prior actions by the Applicant in order to respond to any selection process, or (ii) any future actions by the Applicant in connection with the negotiations, including, but not limited to, actions to comply with requirements of HPD, the City, or any applicable laws.

Very truly yours,

_____
Signature

_____
Title

_____
Applicant

SustaiNYC RFP
Form B – Proposal Summary

**The summary below MUST be consistent with the rest of the Proposal (e.g. Financing Proposal and Design Narrative).*

Unit Summary

Building Name/Description	Rental Units	Homeownership Units	Super Units	Total Units	Gross Square Feet
Total					
% of Total Project				-	-

Affordability Summary

Building Name/Description	__%AMI	__%AMI	__%AMI	__%AMI	__%AMI
Total Units					
% of Total Project					

Unit Count by Type

Building Name/Description	Studio	1BR	2BR	3BR/4BR
Total Units				
% of Total Project				

Average Unit Size (SF)

Building Name/Description	Studio	1BR	2BR	3BR/4BR

Summary of other uses (commercial, community facility, etc.)

Building Name/Description	Use	Gross Square Feet
Total Gross Sqaure Feet		

Form C: Development Team Information and Applicant Questionnaire

C1 – Development Team Information (Tab C)

All applicants shall complete pages 1 - 3 of this form. Applicants that include a not-for-profit entity as principal of the developer or part of the Development Team shall also complete pages 4 -6.

Name of Applicant: _____

Name of Contact Person: _____ E-mail: _____

Mailing Address: _____

Telephone No: _____ Alternate Phone: _____

COMPOSITION OF APPLICANT ENTITY:

1. Type of organization (i.e. partnership, corporation, limited liability company, joint venture):_____

2. Provide the following information about all principals of the applicant. For corporations, provide the names of the officers and any shareholders owning 10% or more; for partnerships, provide the names of all general partners. For joint ventures, provide the information separately for each entity that comprises the joint venture. Also, state the role(s) that each principal would play in the development of the sites, using the categories specified below.

NAME OF ENTITY # 1:_____ Percent Interest in Proposed Project:_____

PRINCIPALS: Name/Position/Title	Home Address	Role*	% Interest in Entity

NAME OF ENTITY # 2:_____ Percent Interest in Proposed Project:_____

PRINCIPALS: Name/Position/Title	Home Address	Role*	% Interest in Entity

* Role Categories: GP = General/Managing Partner; GC = General Contractor; F = Provides financing, inactive; A = Architect; L = Legal Services; MA = Managing Agent; O = Other (specify)

Use additional sheets as necessary.

3. Provide the names, addresses, e-mail addresses, and telephone of members of the development team to the extent that these have been decided; if unknown, enter “N/A”.

DEVELOPMENT TEAM:

Architect:	Marketing Agent:
General Contractor:	Managing Agent:
Legal Counsel:	Social Service Provider:
Passive House Consultant:	Other:

Is there an identity of interest between any principals of the developer and any other entities that make up the development team? Yes [ ] No [ ]

If yes, please explain.

4. Has any principal identified above, or any organization in which the principal is or was a general partner, corporate officer, or owned more than 10% of the shares of the corporation, been the subject of any of the following:

(1) Conviction of, or charges currently pending for, arson, fraud, bribery, or grand larceny any felony or crime of dishonesty?

Yes [ ] No [ ]

(2) Noncompliance with fair housing or anti-discrimination laws, any applicable codes or ordinances, labor laws, or construction laws?

Yes [ ] No [ ]

(3) Had an ownership or management interest in real property that was the subject of a tax lien sale, was or is the subject of tax, mortgage, or lien foreclosure or enforcement proceedings, or is currently in tax or mortgage arrears?

Yes [ ] No [ ]

(4) Had an ownership or management interest in a property with respect to which HPD commenced an action in the Housing Part of the Civil Court, or with respect to which an administrator was appointed pursuant to Article 7-A of the Real Property Actions and Proceedings Law?

Yes [ ] No [ ]

(5) Denial of a certification of no harassment or any administrative or judicial finding of harassment?

Yes [ ] No [ ]

(6) Default or poor performance rating under any agreement with, or suspension or debarment by, any governmental entity?

Yes [ ] No [ ]

(7) In the last seven years, filed a bankruptcy petition or been the subject of involuntary bankruptcy proceedings?

Yes [ ] No [ ]

(8) In the last five years, failed to file any required tax returns, or failed to pay any applicable Federal, State of New York, or City taxes or other charges?

Yes [ ] No [ ]

(9) Had any negative findings from the City's Department of Investigation?

Yes [ ] No [ ]

If the answer to any question is yes, provide the following information about each instance: name of principal(s); name(s) of organization(s) or corporation(s); principal's status in the organization or corporation (e.g. officer), the date of the action, and current status and disposition.

CERTIFICATION

[This certification must be signed by one of the principals listed above; if the applicant is a joint venture, it must be signed by a principal of each entity that comprises the joint venture.]

I certify that the information set forth in this application and all attachments and supporting documentation is true and correct. I understand that the City of New York will rely on the information in or attached to this document and that this document is submitted to induce the City of New York to select this proposal for development of a site.

I understand that this statement is part of a continuing application and that until such time that the subject project is finally and unconditionally approved by the City of New York, I will report any changes in or additions to the information herein, and will furnish such further documentation or information as may be requested by the City of New York or any agency thereof.

I understand that if I receive preliminary designation to develop this site, I must submit all additional disclosure forms required.

Name of Organization	Signature
Date	Print or Type Name and Title
Name of Organization	Signature
Date	Print or Type Name and Title

C2 – Not-For-Profit Organization: Applicant Description

Name of Organization:_____

Office Address:_____

City:_____State:_____ZIP Code_____

Executive Director:_____

Contact Person:_____ Title:_____

Phone No._____ FAX No._____

ROLE OF ORGANIZATION IN THE PROJECT: Describe the role that the not-for-profit organization will play, such as developer, marketing agent, etc.

Date Established:_____ Date Incorporated:_____

CERTIFICATION: I CERTIFY THAT THE INFORMATION SET FORTH IN THIS DISCLOSURE STATEMENT AND ITS ATTACHMENTS IS TRUE AND CORRECT.

_____
Signature of Officer

_____
Print Name and Title

_____
Date

Use additional sheets as necessary.

C2 – Not-For-Profit Organization: Directors, Officers, and Key Staff

Name of Organization:_____

Name and Home Address	Position and/or Office in Organization	Date of Initial Appointment	Current Occupation and Name of Employer

Use additional sheets as necessary

C2 – Not-For-Profit Organization: Major Sources of Funding

Name of Organization:_____

Provide the following information regarding your major sources of funding during the two years preceding the deadline for submission of proposals under this RFP.

Funding Source (Agency, Department, etc.)	Name of Program	Contact Person Name and Phone Number	Purposes of Funding	Dates of Funding	Funding Amount

Use additional sheets as necessary

SustaiNYC RFP
Form D1 – Residential Development Experience and Current Workload

Site: **Developer:**

List below all residential properties developed within the seven (7) year period preceding the deadline for submission of proposals in response to this RFP. Use additional pages as needed.

Project Name	Address	Role (a)	Type (b)	Category (c)	# of Buildings	Total # of Units	TDC	Start Date	Completion Date	Current Status (d)	Gov't Program (e)	Construction Lender (f)	Permanent Lender (f)	Property Manager (g)

(a) ROLE: Indicate the role or roles you played in the development of each property listed. If developed as part of a joint venture, indicate such by adding JV to the respective role (e.g., D/JV).
D=Developer; B=Builder; GC= General Contractor; CM=Construction Manager; F=Provided Financing; O=Other (specify)
(b) TYPE: Project Type: RH=Rental Housing; CH=Coop/Condo Housing; SF=Single Family Housing; O=Office; R=Retail; CF=Community Facility; M=Mixed Use
(c) CATEGORY: NC=New Construction; SR=Substantial Rehab; MR=Moderate Rehab
(d) STATUS: Indicate if project is Pre=Pre-development; UC=Under Construction; Com=Completed
(e) GOVERNMENT PROGRAM: Provide the name of the program, contact name, and telephone number.
(f) CONSTRUCTION/PERMANENT LENDER: Provide the name of the institution.
(g) MANAGEMENT: Indicate if you manage the project directly or use a property manager. Provide the name of the property manager used, if any. Indicate N/A if you no longer own the project.

SustaiNYC RFP
Form D2 – Residential Management Experience and Current Workload

Name of Applicant: _____

Entity Whose Experience is Described Listed Below: _____

List below all properties managed currently or within the seven (7) year period preceding the deadline for submission of proposals in response to this RFP. Use additional pages as needed.

Property Address: Builiding Number, Street City, State, Zip	Housing Type (i.e. 1 - 4 family homes; multifamily rental; coop; condominium)	Number of DU's	Dates of Management		Section 8? (Y/N)	LIHTC? (Y/N)	Public Hsg Units (Y/N)	Owner ("Self", or provide name and phone number):
			From	To				

Page ____ of _____ (Use additional sheets as necessary)

D3 – Management Questionnaire

1. Across your portfolio, what is the typical ratio of property managers to number of units? Describe if staffing plans differ based on the funding source (e.g. LIHTC or HOME).

2. Describe the management and maintenance staffing plan envisioned for this project. If you have one, please submit a sample or project-specific Management Plan.

3. What property management certifications and licenses are held by your staff? (For example: RAM or IREM certification, tax credit certification, commercial real estate broker's license, etc.)

4. Please describe any LIHTC and/or HOME compliance coursework management staff has completed.

5. Has any property managed by the manager or owned by the owner ever had a recapture of LIHTC? If so, please explain in detail. Please include instances where you may have purchased or taken over management of a property with open compliance issues.

6. Have IRS Forms 8823s been issued for your properties, reporting noncompliance that was uncorrected at the time of issuance? If so, how many have been issued? Please include instances where you may have purchased or taken over management of a property with open compliance issues.

7. Do any properties managed by the manager or owned by an affiliate of the owner have open HOME compliance issues? If so, please explain in detail. Please include instances where you may have purchased or taken over management of a property with open compliance issues.

8. Do any properties managed by the manager or owned by an affiliate of the owner have open Class C NYC Housing Maintenance Code violations or open NYC DOB violations? If so, please explain in detail. Please include instances where you may have purchased or taken over management of a property with open violations.

9. Has the management company or any of its principals been disbarred by HUD or any other government agencies?

10. What is the vacancy rate across your portfolio as of the date of this submission? Please explain.

11. What are delinquent rents as a percentage of total rent roll across your portfolio of owned/managed properties? Please submit data showing arrears at 30, 60, and 90+ days arrearages.

12. Please submit a sample Monthly Management Report from the last year for an affordable housing property of your choosing.

Form E: Assets Statement

E- Assets Statement (Tab E)

[Assets Statement must describe financial status within the last twelve months and must be dated and signed.]

Principal or Individual whose assets are described below:

---

1. Personal Information

Name:

Business Name:

Business Phone:

Residence Address:
City:
State:
Zip Code:

Business Address:
City:
State:
Zip Code:

Position (Title):

Years of Service:

Salary:
Bonus/Commission:

Other Income:
Source of Other Income:

Are you a defendant in any lawsuits or legal action that may impact your financial standing?
If so, please describe:

Do you have any contingent liabilities?
If so, please describe:

2. Statement of Financial Condition

Assets	Dollars (omit cents)	Liabilities	Dollars (omit cents)
Cash On Hand and in Banks		Notes Payable to Banks *Secured*	
Notes Receivable		Notes Payable to Banks *Unsecured*	
Mortgages Owned		Notes Payable to Others *Secured*	
		Notes Payable to Others *Unsecured*	
Marketable Securities Owned See **Schedule A**		Debt Balances in Margin Accounts with Brokers	
Real Estate Owned		Mortgages on Real Estate	
Cash Value of Life Insurance		Loans Against Life Insurance	
Other Assets* (Itemize)		Other Liabilities (Itemize)	
Total Assets		**Total Liabilities**	
		Net Worth	

* Any interest in a closely held business must be documented by providing a current balance sheet for that business and stating the percent of interest held by the applicant.

Schedule A: Marketable Securities Owned

List separately and check (X) next to those pledged as collateral.

Marketable Securities Owned	Dollars (Omit Cents)	Collateral?

3. Signature Page

You, the undersigned hereby represent the above to be a true and accurate Statement signed as of the date herein.

Name of Principal: _____

Signature of Individual: _____

Print Name and Title of Individual: _____

Date: _____

SustaiNYC RFP
Form K: Rental Pro Forma

Instructions

Please complete this pro forma for the rental component of your project. Fill in the cells shaded blue. Keep cells linked and maintain calculations. If you modify given assumptions, please clearly note the changes.

Applicants should provide separate pro formas for each component of a project that will be separately financed.

Applicants must provide these forms in Excel file format on a flash drive in addition to the hard copies submitted in the binder.

SustaiNYC RFP

Site:

Units: -

SOURCES AND USES

Construction Sources			per DU	% of total
First Mortgage (Lender:)	#DIV/0!		#DIV/0!	#DIV/0!
Second Mortgage (Lender:)		$0	#DIV/0!	#DIV/0!
Third Mortgage (Lender:)		$0	#DIV/0!	#DIV/0!
Fourth Mortgage (Lender:)		$0	#DIV/0!	#DIV/0!
LIHTC Equity		$0	#DIV/0!	#DIV/0!
Deferred Developer's Fee		$0	#DIV/0!	#DIV/0!
Developer Equity		-	#DIV/0!	#DIV/0!
Other source (Specify:)		$0	#DIV/0!	#DIV/0!
Gap/(Surplus)		$0	#DIV/0!	#DIV/0!
TOTAL SOURCES	#DIV/0!		#DIV/0!	#DIV/0!

Permanent Sources				
First Mortgage (Lender:)	#DIV/0!		#DIV/0!	#DIV/0!
Second Mortgage (Lender:)		$0	#DIV/0!	#DIV/0!
Third Mortgage (Lender:)		$0	#DIV/0!	#DIV/0!
Fourth Mortgage (Lender:)		$0	#DIV/0!	#DIV/0!
Other source (Specify:)		$0	#DIV/0!	#DIV/0!
LIHTC Equity		$0	#DIV/0!	#DIV/0!
Deferred Developer's Fee	#DIV/0!		#DIV/0!	#DIV/0!
Developer Equity	#DIV/0!		#DIV/0!	#DIV/0!
Other source (Specify:)		$0	#DIV/0!	#DIV/0!
Gap/(Surplus)		$0	#DIV/0!	#DIV/0!
TOTAL SOURCES	#DIV/0!		#DIV/0!	#DIV/0!

Uses				
Acquisition Cost		$0	#DIV/0!	#DIV/0!
Construction Cost		$0	#DIV/0!	#DIV/0!
Soft Cost	#DIV/0!		#DIV/0!	#DIV/0!
Developer's Fee		$0	#DIV/0!	#DIV/0!
TOTAL USES	#DIV/0!		#DIV/0!	#DIV/0!

SustaiNYC RFP
Site: **Units:** **0**

DEVELOPMENT BUDGET

		Developer Costs		
Acquisition Cost		-		
Construction Cost				
Contractor Price				
Residential	#DIV/0! /du		#DIV/0!	psf
Commercial Space			#DIV/0!	psf
Community Space			#DIV/0!	psf
Parking			#DIV/0!	psf
Contingency		-		
Total Hard Cost	#DIV/0! /du	-	#DIV/0!	average per sf
Soft Cost				
Borrower's Legal				
Borrower's Engineer/Architect Fees				
Accounting & Cost Certification				
Housing/Development Consultant				
Bank's Engineer				
Bank Legal				
Permits and expediting				
Environmental Phase I & II				
CEQR				
Borings				
Survey				
Geotechnical				
Title Insurance				
Appraisal				
Other (Specify:_____)				
Subtotal		**$0**		
Financing Fees (Please maintain links to original calculations and note any changes)				
Upfront L/C Fee	of LOC amt	#DIV/0!		
Annual L/C Fee	of LOC amt	#DIV/0!		
HDC Fee (if applicable)	of HDC cons 1st	#DIV/0!		
NY State Bond Issuance Charge	of HDC cons 1st	#DIV/0!		
Costs of Issuance	of HDC cons 1st	#DIV/0!		
HPD Fee (if applicable)				
Interest Rate Cap (estimate)				
Tax Exemption/Abatement Fees & Consultant				
LIHTC Application Fee				
Non Profit Sponsor				
Other (Specify:_____)				
Subtotal		**#DIV/0!**		
Carrying Costs				
Construction Interest		#DIV/0!	(change link if assuming variable rate)	
Negative Arbitrage		#DIV/0!		
Mortgage Recorting Tax				
Water/Sewer & Real Estate Taxes				
Utilities				
Insurance				
Construction Monitor				
Marketing				
Security				
Other (Specify:_____)				
Subtotal		**#DIV/0!**		
Reserves and Contingency				
Social Service Reserve				
Capitalized Operating Reserve	/unit	-		
Additional Operating Reserve (if applicable)				
Soft Cost Contingency			#DIV/0!	of soft costs
Subtotal		**-**		
Total Soft Costs		**#DIV/0!**		
Developer's Fee			#DIV/0!	of TDC less Dev Fee
Total Development Cost:		**#DIV/0!**		

Construction Sources

First Mortgage (Lender:)	#DIV/0!	#DIV/0!
Second Mortgage (Lender:)	-	#DIV/0!
Third Mortgage (Lender:)	-	#DIV/0!
Fourth Mortgage (Lender:)	-	#DIV/0!
LIHTC Equity		#DIV/0!
Deferred Developer's Fee		#DIV/0!
Developer Equity		#DIV/0!
Other source (Specify:)		#DIV/0!
Gap/(Surplus)	#DIV/0!	#DIV/0!
Total	#DIV/0!	#DIV/0!

Permanent Sources

First Mortgage (Lender:)	#DIV/0!	#DIV/0!
Second Mortgage (Lender:)	-	#DIV/0!
Third Mortgage (Lender:)	-	#DIV/0!
Fourth Mortgage (Lender:)	-	#DIV/0!
LIHTC Equity		#DIV/0!
Deferred Developer's Fee		#DIV/0!
Developer Equity		#DIV/0!
Other source (Specify:_____)		#DIV/0!
Gap/(Surplus)	#DIV/0!	#DIV/0!
Total	#DIV/0!	#DIV/0!

SustaiNYC RFP
Site: **Units:** **0**

CONSTRUCTION INTEREST

Bond Amount

		% of bond
Long Term Amount	#DIV/0!	#DIV/0!
Short Term Amount	#DIV/0!	#DIV/0!
Total Bond Amount	**#DIV/0!**	

Term

	Months	Years
Construction term		0.00
Rent-up & conversion term		0.00
Total term	0	0.00

Fixed Rates

Long Term	
Short Term	
2nd Construction	
3rd Construction	
4th Construction	

Variable Rate

SIFMA	0.00%
+___ bps cushion	0.00%
Variable Rate	0.00%

Interest Calculations

Fixed Rate	Amount	% Outstanding	Term (years)	Interest Rate	Interest
1st - Short Term	#DIV/0!	50%	0.0	0.00%	#DIV/0!
	#DIV/0!	100%	0.0	0.00%	#DIV/0!
1st - Long Term	#DIV/0!	50%	0.0	0.00%	#DIV/0!
	#DIV/0!	100%	0.0	0.00%	#DIV/0!
2nd Construction	$0	100%	0.0	0.00%	$0.00
3rd Construction	$0	100%	0.0	0.00%	$0.00
4th Construction	$0	100%	0.0	0.00%	$0.00
			Total Fixed Rate Cons. Interest		**#DIV/0!**

Variable Rate	Amount	% Outstanding	Term (years)	Interest Rate	Interest
HDC 1st	#DIV/0!	50%	0.0	0.00%	#DIV/0!
	#DIV/0!	100%	0.0	0.00%	#DIV/0!
HDC 2nd	$0	100%	0.0	0.00%	$0.00
	$0	100%	0.0	0.00%	$0.00
			Total Variable Rate Cons. Interest		**#DIV/0!**

NEGATIVE ARBITRAGE

(for fixed-rate deals only)

Investment Rate

	Short Term	Long Term
Rate	0.00%	0.00%
Short Term Amount	#DIV/0!	#DIV/0!
% Outstanding	50%	50%
Investment Spread	0.00%	0.00%
Construction Term (years)	1.5	1.5
	#DIV/0!	#DIV/0!
Negative Arbitrage	**#DIV/0!**	

LETTER OF CREDIT AMOUNT

Bond Amount		#DIV/0!
Days Interest		#DIV/0!
LC Amount		**#DIV/0!**

SustaiNYC RFP
Site: **Units:** **0**

SF DISTRBUTION

	GSF		Efficiency	NSF
#DIV/0!		Residential GSF		0
#DIV/0!		Commercial GSF		0
#DIV/0!		Community GSF		0
#DIV/0!		Parking GSF		0
	0	**Total Project GSF**		**0 Total Project NSF**

UNIT DISTRBUTION

	# of Units	# of Rms/ DU	# Rooms	**Average Net SF per Unit**
Studio	0	2	0	
1 Bedroom	0	3	0	
2 Bedroom	0	4	0	
3 Bedroom	0	5	0	
Subtotal	**0**		**0**	
Super's Unit			0	
Total	**0**		**0**	**0** Net Residential Square Feet
				#DIV/0! Average Net SF per DU

COMMERICAL AND ANCILLARY INCOME

	# of Spaces	Monthly Rent	Annual Income
Parking			$0

	Total s.f.	Annual Rent/s.f.	Annual Income
Commercial	0		$0

	Total s.f.	Annual Rent/s.f.	
Community	0		$0

	# units	Annual per unit	Annual Income
Laundry	0		$0

Total Commercial & Ancillary Income **$0** #DIV/0!

RESIDENTIAL INCOME

2016 HUD Income Limits	**90,600**	Family of Four
	1,571	2 BR FMR

Rent Less Electricity = 1, Rent Less Electricity/Gas = 0 | 1

		Electricity Allowance	Gas Allowance
2 rooms	studio	39	16
3 rooms	1 BR	40	17
4 rooms	2 BR	41	17
5 rooms	3 BR	54	18

Note: For market rate units, please hard code rents

	HUD IL	0						
Unit size	HH size	HH factor	HH income	max gross monthly rent	utility allowance	max net monthly rent	Number of units	Annual Rent
studio	1	0.70	-	0	-39	-39		-
1 BR	1.5	0.75	-	0	-40	-40		-
2 BR	3	0.90	-	0	-41	-41		-
3 BR	4.5	1.04	-	0	-54	-54		-

57%	**HUD IL**	51,642						
Unit size	HH size	HH factor	HH income	max gross monthly rent	rent less electricity	max net monthly rent	Number of units	Annual Rent
studio	1	0.70	36,149	905	-39	866		-
1 BR	1.5	0.75	38,732	969	-40	929		-
2 BR	3	0.90	46,478	1,162	-41	1,121		-
3 BR	4.5	1.04	53,708	1,343	-54	1,289		-

100%	**HUD IL**	90,600						
Unit size	HH size	HH factor	HH income	max gross monthly rent	rent less electricity	max net monthly rent	Number of units	Annual Rent
studio	1	0.60	54,360	1,360	-39	1,321		-
1 BR	1.5	0.75	67,950	1,700	-40	1,660		-
2 BR	3	0.90	81,540	2,039	-41	1,998		-
3 BR	4.5	1.04	94,224	2,357	-54	2,303		-

	HUD IL	0						
Unit size	HH size	HH factor	HH income	max gross monthly rent	rent less electricity	max net monthly rent	Number of units	Annual Rent
studio	1	0.60	-	0	-39	-39		-
1 BR	1.5	0.75	-	0	-40	-40		-
2 BR	3	0.90	-	0	-41	-41		-
3 BR	4.5	1.04	-	0	-54	-54		-

Market Rate

Unit size	Monthly Rent	Number of units	Annual Rent
studio			-
1 BR			-
2 BR			-
3 BR			-
	Total units	0	
	Total Annual Rental Income upon occupancy		**-**
	TOTAL ANNUAL PROJECT INCOME		**-**

SustaiNYC RFP
Site: **Units:** **0**

MAINTENANCE & OPERATING EXPENSES

0	Units
0	Rooms

Expenses				**per rm/du**	
Supplies/Cleaning/Exterminating		$	-		per room
Heating	(oil)	$	-		per room
Gas & Electricity		$	-		per room
Cooking Gas		$	-		unit
Repairs/Replacement		$	-		per unit
Legal		$	-		per unit
Accounting		$	-		per project
Painting		$	-		per room
Superintendent & Maintenance Staff Salaries			$0	#DIV/0!	per unit
Number of:					
F/T super(s)			$0		annual + fring
porters			$0		annual + fring
Elevator Maintenance & Repairs		$	-		per elevator
Management Fee		$	-		of ERI
Water & Sewer		$	-		per room
Fire and Liability Insurance		$	-		per unit
Other Expenses(Specify:_____)		$	-		per unit
Other Expenses(Specify:_____)		$	-		per unit
Replacement Reserve		$	-		per unit
M & O Before Taxes and Debt Service		**$**	**-**		**Total**
				#DIV/0!	**per room**
				#DIV/0!	**per unit**
Real estate taxes					
TOTAL ANNUAL PROJECT EXPENSES			**$0**		
		#DIV/0!			**per unit**
		#DIV/0!			**per room**

SustaiNYC RFP
Site:

Units: **0**

MORTGAGE SIZING

Determination of Maximum Insurable Mortgage
based on net available for debt service and land taxes

Income			
Residential Income			$0
Less Residential Vacancies			$0
Net Residential Income			*$0*
Parking Income			$0
Commercial Income			$0
Community Space Income			$0
Ancillary/Laundry			$0
Less Parking Vacancies			$0
Less Commercial Vac			$0
Less Community Space Income			$0
Less Ancillary/Laundry Vac			$0
Net Comm & Ancillary Income			*$0*
Net Income			**$0**
Expenses			
Maintenance/Operating	#DIV/0!	per unit	$0
Real estate taxes	#DIV/0!	per unit	$0
Replacement Reserve	#DIV/0!	per unit	$0
Total Expenses	**#DIV/0!**	**per unit**	**$0**
NET OPERATING INCOME			**$0**
Net Available @1.05 Income to Expense			$0
Combined DSCR			
Net Available for Debt Service @			#DIV/0!
Income to Expense			#DIV/0!
1st Mort DSCR			
Net Available for Debt Service @			#DIV/0!
Income to Expense			#DIV/0!

Variable Interest Rates		**Fixed Interest Rates**	
			TAX EXEMPT
Base Rate		Base Underwriting Rate	
Underwriting Cushion		Servicing Fee	
LC Fees		MIP	
Trustee		Sum of above rates	0.00%
Remarketing			
Servicing			
	0.00%		

Total Supportable First Mortgage		Enter 1st Mortgage Amount from Cell H30 here
Second Mortgage	$ -	
Third Mortgage	$ -	
Fourth Mortgage	$ -	
Total Combined Debt	$ -	

	1st Loan Reduction	2nd Loan Constant	3rd Loan Constant	4th Loan Constant	
	1st Loan	2nd Loan	3rd Loan	4th Loan	Total
	#DIV/0!	$ -	$0	$0	#DIV/0!
Rate	0.00%				
Term					
Yrs 1 - 30 Amt Amortized	#DIV/0!	$0	$0	$0	
Balance	$0	$0	$0	$0	
Balloon %	#DIV/0!	#DIV/0!	#DIV/0!	#DIV/0!	
Debt Service	#DIV/0!	-	-	-	#DIV/0!
Debt Coverage	#DIV/0!	#DIV/0!	#DIV/0!	#DIV/0!	#DIV/0!

Assumed Subsidies

2nd Loan	Source:		/du
3rd Loan	Source:		/du
4th Loan	Source:		

SustaiNYC RFP
Site:

Units: **0**

	increases	Year 1	Year 2	Year 3	Year 4	Year 5	Year 6	Year 7	Year 8	Year 9	Year 10	Year 11	Year 12	Year 13	Year 14	Year 15
EFFECTIVE INCOMES																
Residential Income		0	0	0	0	0	0	0	0	0	0	0	0	0	0	0
Parking Income		0	0	0	0	0	0	0	0	0	0	0	0	0	0	0
Commercial Income		0	0	0	0	0	0	0	0	0	0	0	0	0	0	0
Community Space Income		0	0	0	0	0	0	0	0	0	0	0	0	0	0	0
Ancillary Income		0	0	0	0	0	0	0	0	0	0	0	0	0	0	0
Total Income		**0**	**0**	**0**	**0**	**0**	**0**	**0**	**0**	**0**	**0**	**0**	**0**	**0**	**0**	**0**
EXPENSES																
M&O Expenses		0	0	0	0	0	0	0	0	0	0	0	0	0	0	0
Building Reserve		0	0	0	0	0	0	0	0	0	0	0	0	0	0	0
Total Expenses		**0**	**0**	**0**	**0**	**0**	**0**	**0**	**0**	**0**	**0**	**0**	**0**	**0**	**0**	**0**
NOI		**0**	**0**	**0**	**0**	**0**	**0**	**0**	**0**	**0**	**0**	**0**	**0**	**0**	**0**	**0**
Debt Service		#DIV/0!	#DIV/0!	#DIV/0!	#DIV/0!	#DIV/0!	#DIV/0!	#DIV/0!	#DIV/0!	#DIV/0!	#DIV/0!	#DIV/0!	#DIV/0!	#DIV/0!	#DIV/0!	#DIV/0!
Net Cash Flow		**#DIV/0!**	**#DIV/0!**	**#DIV/0!**	**#DIV/0!**	**#DIV/0!**	**#DIV/0!**	**#DIV/0!**	**#DIV/0!**	**#DIV/0!**	**#DIV/0!**	**#DIV/0!**	**#DIV/0!**	**#DIV/0!**	**#DIV/0!**	**#DIV/0!**
Net Cash Flow in 15 years		**#DIV/0!**														

SustaiNYC RFP
Site:

Units: -

TAX CREDIT ANAYLSIS*
**This is an estimate; for actual raise and calculation, defer to LIHTC Investor*

	Eligible Cost (Y/N)	Total Cost	Eligible Amount
Acquisition Cost	N	-	
Construction Cost			
Contractor Price			
Residential	Y	-	
Commercial Space	N	-	
Community Space	Y	-	
Parking	N	-	
Contingency	Y	-	
Total Hard Cost		-	-
Soft Cost			
Borrower's Legal	Y	-	
Borrower's Engineer/Architect Fees	Y	-	
Accounting & Cost Certification	Y	-	
Housing/Development Consultant	Y	-	
Bank's Engineer	Y	-	
Bank Legal	Y	-	
Permits and expediting	Y	-	
Environmental Phase I & II	Y	-	
CEQR	Y	-	
Borings	Y	-	
Survey	Y	-	
Geotechnical	Y	-	
Title Insurance	Y	-	
Appraisal	N	-	
Subtotal		-	-
Financing Fees (Please maintain links to original calculations and note any changes)			
Upfront L/C Fee	Y	#DIV/0!	
Annual L/C Fee	Y	#DIV/0!	
HDC Fee (if applicable)	N	#DIV/0!	
Costs of Issuance	N	#DIV/0!	
HPD Fee (if applicable)	N	-	
Interest Rate Cap (estimate)	N	-	
Tax Exemption/Abatement Fees & Consultant	Y	-	
LIHTC Application Fee	N	-	
Non Profit Sponsor	Y	-	
Subtotal		***#DIV/0!***	-
Carrying Costs			
Construction Interest	Y	#DIV/0!	
Negative Arbitrage	N	#DIV/0!	
Mortgage Recorting Tax	N	-	
Water/Sewer & Real Estate Taxes	Y	-	
Utilities	Y	-	
Insurance	Y	-	
Construction Monitor	Y	-	
Marketing	N	-	
Security	Y	-	
Subtotal		***#DIV/0!***	-
Reserves and Contingency			
Social Service Reserve	N	-	
Capitalized Operating Reserve	N	-	
Additional Operating Reserve (if applicable)	N	-	
Soft Cost Contingency	Y	-	
Subtotal		-	-
Total Soft Costs		***#DIV/0!***	-
Developer's Fee	Y	-	
Total Development Cost:		**#DIV/0!**	-

Number of TC Units		
% TC Units		#DIV/0!
% Non Residential Costs		#DIV/0!
Aplicable Fraction		#DIV/0!
Construction Bonds		#DIV/0!
Eligible Basis		-
Eligible Basis per TC Unit		#DIV/0!
Eligible Basis with Boost		-
Annual Credit @		-
Amount Raised per Credit @		-
Amount Raised Total		-

SustaiNYC RFP **Units:** **0**
Site:

	TRADE ITEM	$ AMOUNT
1	Demolition	
2	Environmental Remediation	
3	Railroad trench deck (Site B only)	
4	Landscaping / Site Work	
5	Concrete	
6a	Masonry, pointing, waterproofing, steam cleaning	
6b	Carpentry, rough	
7	Carpentry, finished	
8	Metals, structural steel	
9	Roofing	
10	Insulation	
11	Doors, frames, hardware	
12	Windows and glazing	
13	Entrance doors	
14	Drywall and plastering	
15	Ceramic tile	
16	Finish flooring	
17a	Painting	
17b	Kitchen cabinets	
18	Applicances, medicine cabinet	
19	Heating and ventilation	
20	Plumbing	
21	Electrical	
22	Other:_____	
23	Other:_____	
24	Other:_____	
25	**SUBTOTAL**	$0
26	General Conditions	
27	Overhead	
28	Profit	
29	**GRAND TOTAL**	$0

SustaiNYC RFP
Site:

Please provide the information below for the entire project, including all separately finance
*****Please do not alter worksheet placement/order of cells**

	Component 1
Pro Forma Assumptions	(Specify)
Source Additional Info	
Total Conventional Debt	
Total Volume Cap Bonds	
Total Recycled Bonds	
Total Taxable Bonds	
% of Developer Fee Deferred during Construction	
Total HPD Subsidy Per Unit	
Total HDC Subsidy Per Unit	
Total Other Source Subsidy Per Unit	
Costs	
Total Residential Hard Costs PSF	
Total Commercial Hard Costs PSF	
Total Community Hard Costs PSF	
Total Parking Hard Costs PSF	
Total Other Hard Costs PSF	
Total Hard Costs w/Contingency PSF	
LOC Upfront Fee % (if any)	
LOC Ongoing Fee % (if any)	
Soft Costs as a % of TDC	
Developer Fee as a % of TDC	
Units & Income	
% of Units with 2 or more bedrooms	
% of Units with rents set at or below 30% AMI	
% of Units with rents set at 31-40% AMI	
% of Units with rents set at 41-50% AMI	
% of Units with rents set at 51-60% AMI	
% of Units with rents set at 61-70% AMI	
% of Units with rents set at 71-80% AMI	
% of Units with rents set at 81-90% AMI	
% of Units with rents set at 81-90% AMI	
% of Units with rents set at 91% of AMI or above	
% of Units with homeless set-aside	
% of affordable Units	
% of Units with market rents	
Total Rental Units (non inc. Super Units)	
# of Super Units	
Non-Residential Income as % of Total	

Commercial Income PSF
Parking Income Per Legal Space
Community Income PSF

Operating Assumptions
Total M&O Per Unit
Total Taxes Per Unit
Tax Abatement Type
Cash Flow Income Inflator %
Cash Flow Expense Inflator %

Other Assumptions
Total Construction Period (months)
LIHTC Raise (e.g.- $0.00)
Assumed LIHTC Rate
Total Permanent Period (years)
Senior Loan Construction Interest Rate %
Senior Loan Permanent All-in Interest Rate %
Assumed Construction Enhancement Type (text)
Assumed Permanent Enhancement Type (text)

Please feel free to list any other critical assumptions not included below:

Units: **0**

ed rental and homeownership components.

Component 2	**Component 3**	**All Components**
(Specify)	(Specify)	

SustaiNYC RFP **Units:** **0**

Site:

These calculations must match the architectural plans included in the proposal.

TOTAL BUILT FLOOR AREA (Gross Square Feet):

Total building stories	
Total Parking Spaces	
Parking Type (i.e.- surface, covered, garage)	
1. Residential Space	0
2. Unfinished Basement	
3. Cellar	
4. Attics	
5. Mechanical / Utility Areas	
6. Garages	
7. Commercial Space	0
8. Community Space	0
9. Parking	
10. Other _____	
11. Subtotal Gross Square Feet	**0**

SustaiNYC RFP **Units:** **0**

Site:

Please provide the information below for the entire project, including all separately financed rental and homeownership components.

		Component 1	Component 2	Component 3	All
TOTAL DEVELOPMENT COST		(Specify)	(Specify)	(Specify)	**Components**
Acquisition					**$0**
Hard Costs					**$0**
Soft Costs					**$0**
Developers Fee					**$0**
TOTAL DEVELOPMENT COST		**$0**	**$0**	**$0**	**$0**
Construction Sources of Financing					
Equity	**Lender / Source**				
Cash Equity					**$0**
Other Source					**$0**
Other Source					**$0**
Other Source					**$0**
Other Source					**$0**
Total Equity		**$0**	**$0**	**$0**	**$0**
Loans / Grants	**Lender / Source**				
Bank Construction Loan					**$0**
Other Loan / Grant					**$0**
Other Loan / Grant					**$0**
Other Source					**$0**
Other Source					**$0**
Total Loans / Grants		**$0**	**$0**	**$0**	**$0**
Total Construction Sources		**$0**	**$0**	**$0**	**$0**
Permanent Sources of Financing					
Sales Proceeds					**$0**
Equity	**Lender / Source**				
Cash Equity					**$0**
Other Source					**$0**
Other Source					**$0**
Other Source					**$0**
Other Source					**$0**
Total Equity		**$0**	**$0**	**$0**	**$0**
Loans / Grants	**Lender / Source**				
Bank 1st Mortgage					**$0**
2nd Mortgage					**$0**
Other Loan / Grant					**$0**
Other Source					**$0**
Other Source					**$0**
Total Loans / Grants		**$0**	**$0**	**$0**	**$0**
Total Permanent Sources		**$0**	**$0**	**$0**	**$0**
Total Residential Units					**0**
Gross Square Footage					**0**