1 AREA MAP

2 DOUGLASTON HISTORICAL DISTRICT

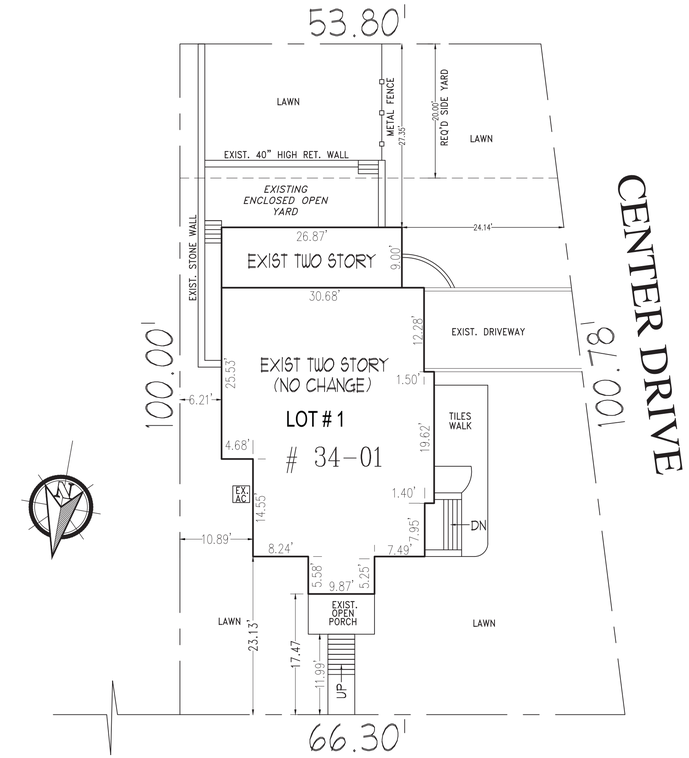

5 PLOT PLAN

Scale: 3/32"=1'-0"

3 TAX MAP

4 TAX MAP WITH BLDG. FOOTPRINTS

ADDRESS: 237 -02 HOLLYWOOD AVENUE

BLOCK : 8047 LOT: 1
ZONE: R1-2 MAP: 11A

LOT AREA 6,000 S.F.

JOHN STACOM ARCHITECTURAL DESIGN P.C.
38-08 BELL BOULEVARD BAYSIDE, NEW YORK - 11361
TEL. (718) 225-7755

JOHN STACOM ARCHITECTURAL DESIGN P.C.
38-08 BELL BOULEVARD BAYSIDE, NEW YORK - 11361
TEL. (718) 225-7755

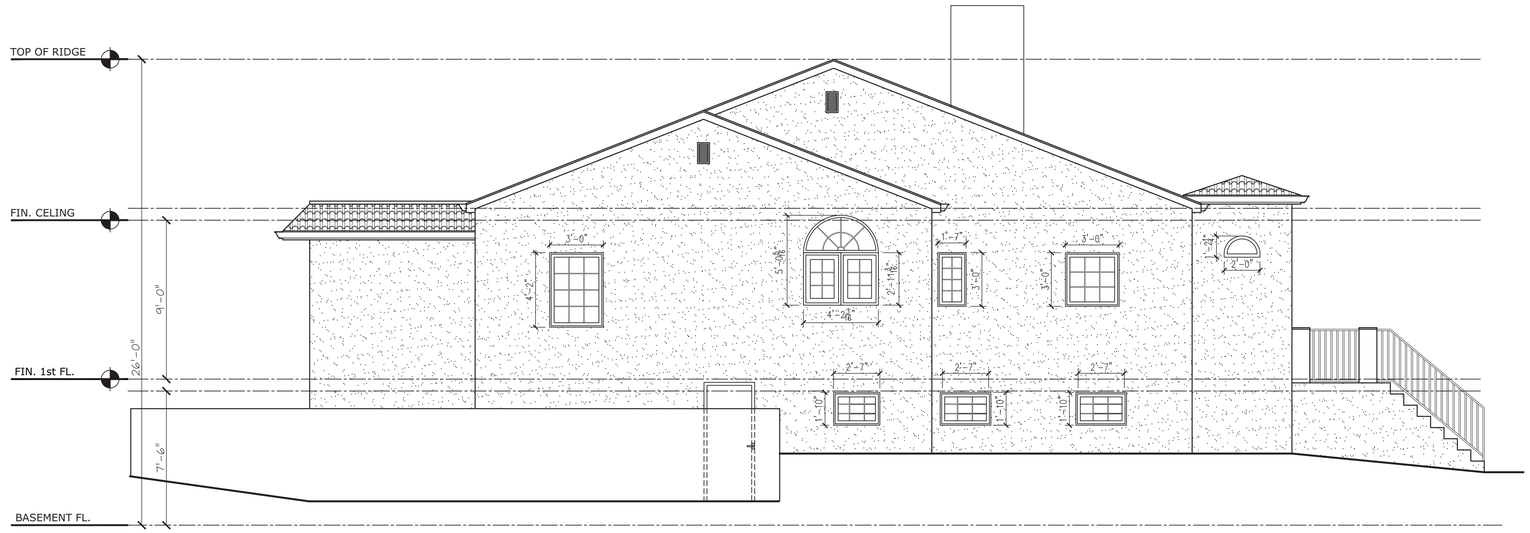

1 EXISTING EAST ELEVATION

Scale: 1/4"=1'-0"

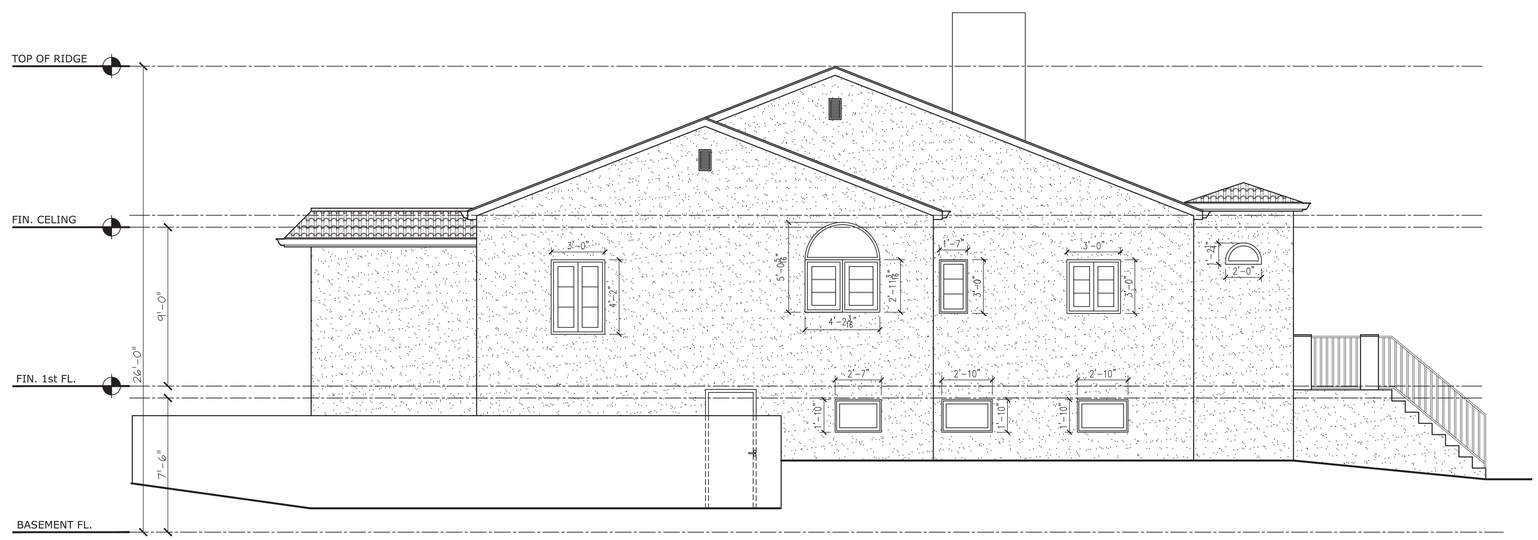

2 PROPOSED EAST ELEVATION

Scale: 1/4"=1'-0"

JOHN STACOM ARCHITECTURAL DESIGN P.C.
38-08 BELL BOULEVARD BAYSIDE, NEW YORK - 11361
TEL. (718) 225-7755

1 EXISTING NORTH ELEVATION

Scale: 1/4"=1'-0"

2 PROPOSED NORTH ELEVATION

Scale: 1/4"=1'-0"

JOHN STACOM ARCHITECTURAL DESIGN P.C.
38-08 BELL BOULEVARD BAYSIDE, NEW YORK - 11361
TEL. (718) 225-7755

1 EXISTING WEST ELEVATION

Scale: 1/4"=1'-0"

2 PROPOSED WEST ELEVATION

Scale: 1/4"=1'-0"

JOHN STACOM ARCHITECTURAL DESIGN P.C.
38-08 BELL BOULEVARD BAYSIDE, NEW YORK - 11361
TEL. (718) 225-7755

1 EXISTING SOUTH ELEVATION

Scale: 1/4"=1'-0"

2 PROPOSED SOUTH ELEVATION

Scale: 1/4"=1'-0"

JOHN STACOM ARCHITECTURAL DESIGN P.C.
38-08 BELL BOULEVARD BAYSIDE, NEW YORK - 11361
TEL. (718) 225-7755

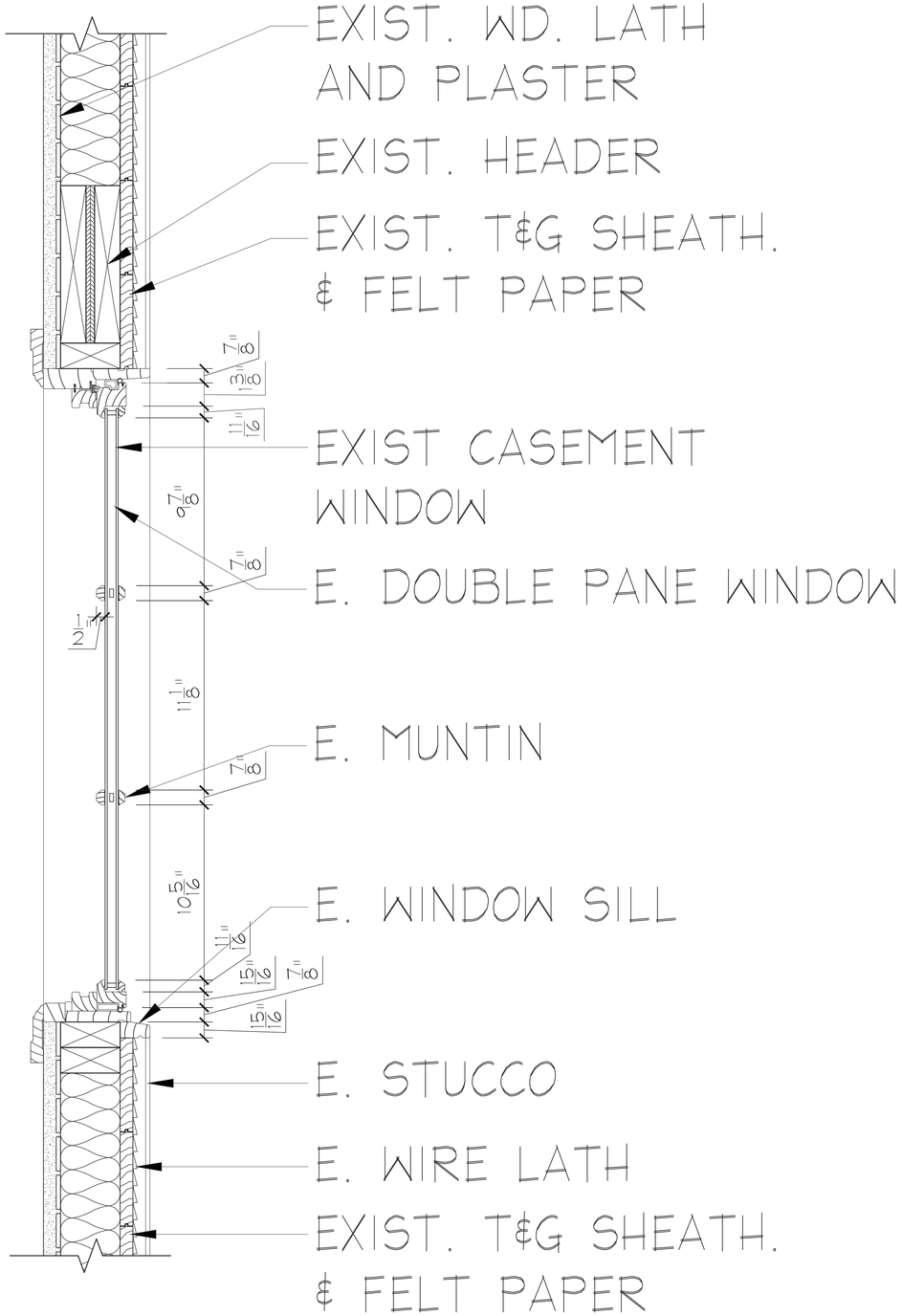

EXIST. WINDOWS

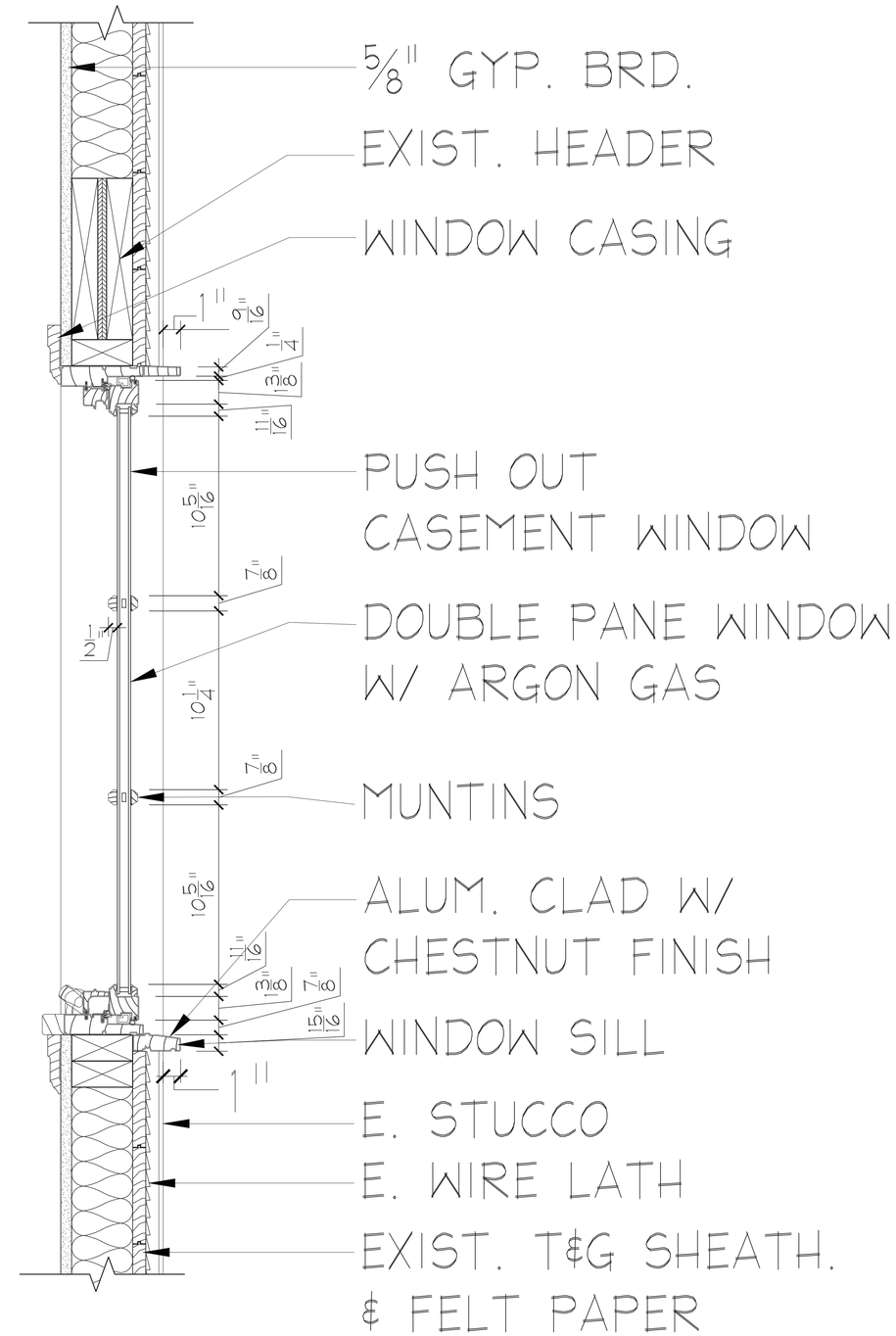

PROP. WINDOWS

JOHN STACOM ARCHITECTURAL DESIGN P.C.
38-08 BELL BOULEVARD BAYSIDE, NEW YORK - 11361
TEL. (718) 225-7755

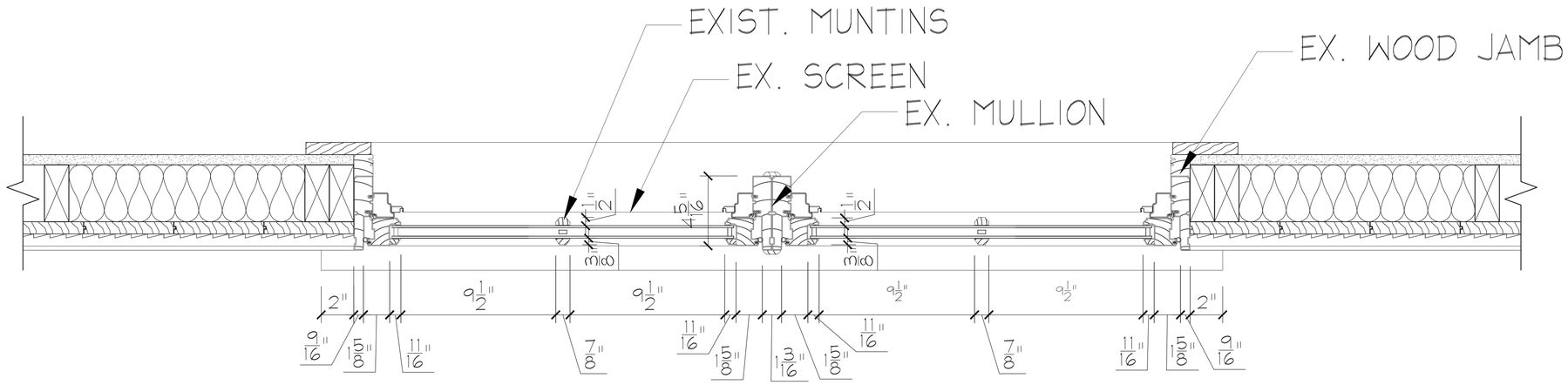

EXIST. HORIZONTAL SECTION DETAIL

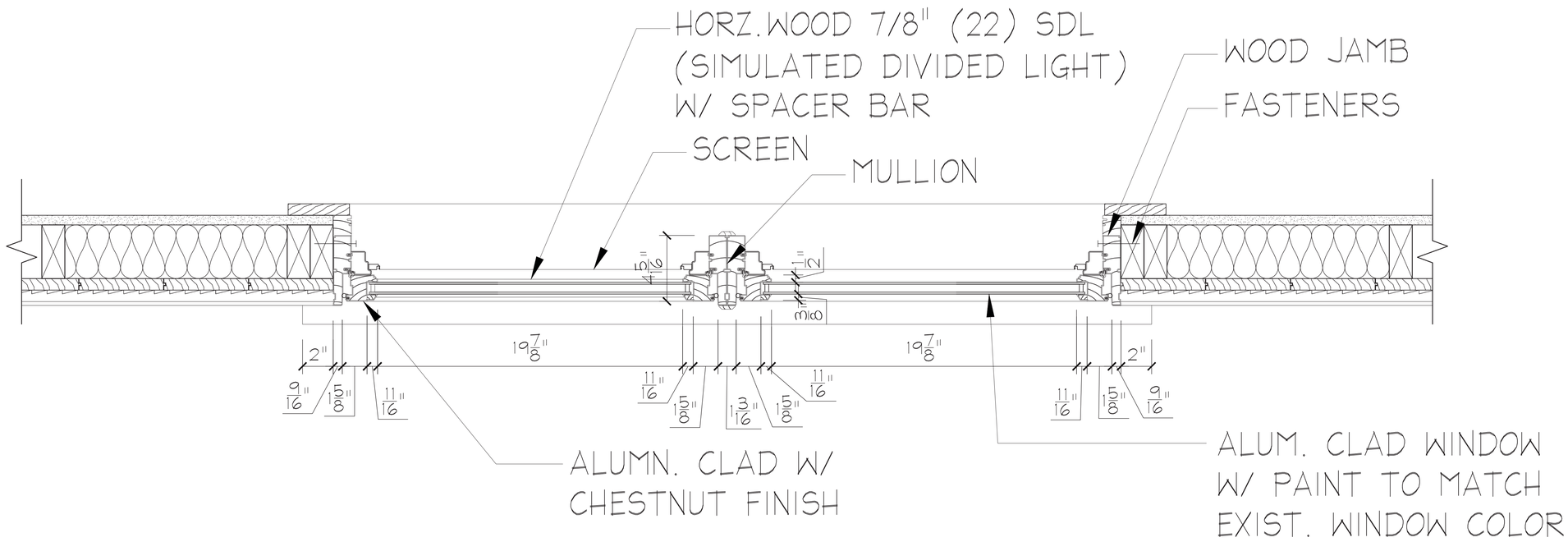

PROP. HORIZONTAL SECTION DETAIL

JOHN STACOM ARCHITECTURAL DESIGN P.C.
38-08 BELL BOULEVARD BAYSIDE, NEW YORK - 11361
TEL. (718) 225-7755

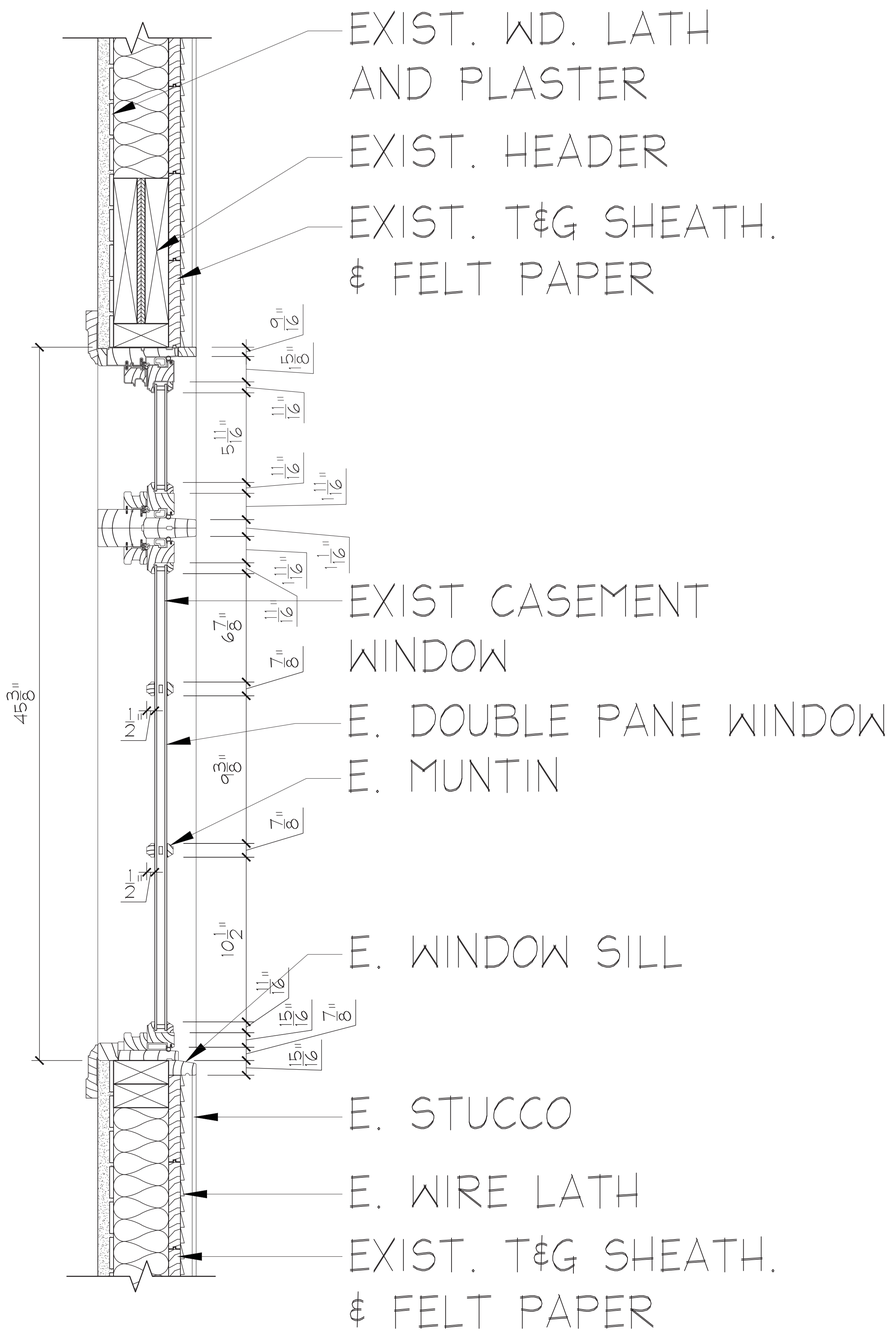

EXIST. LUNETTE
WINDOW SECTION

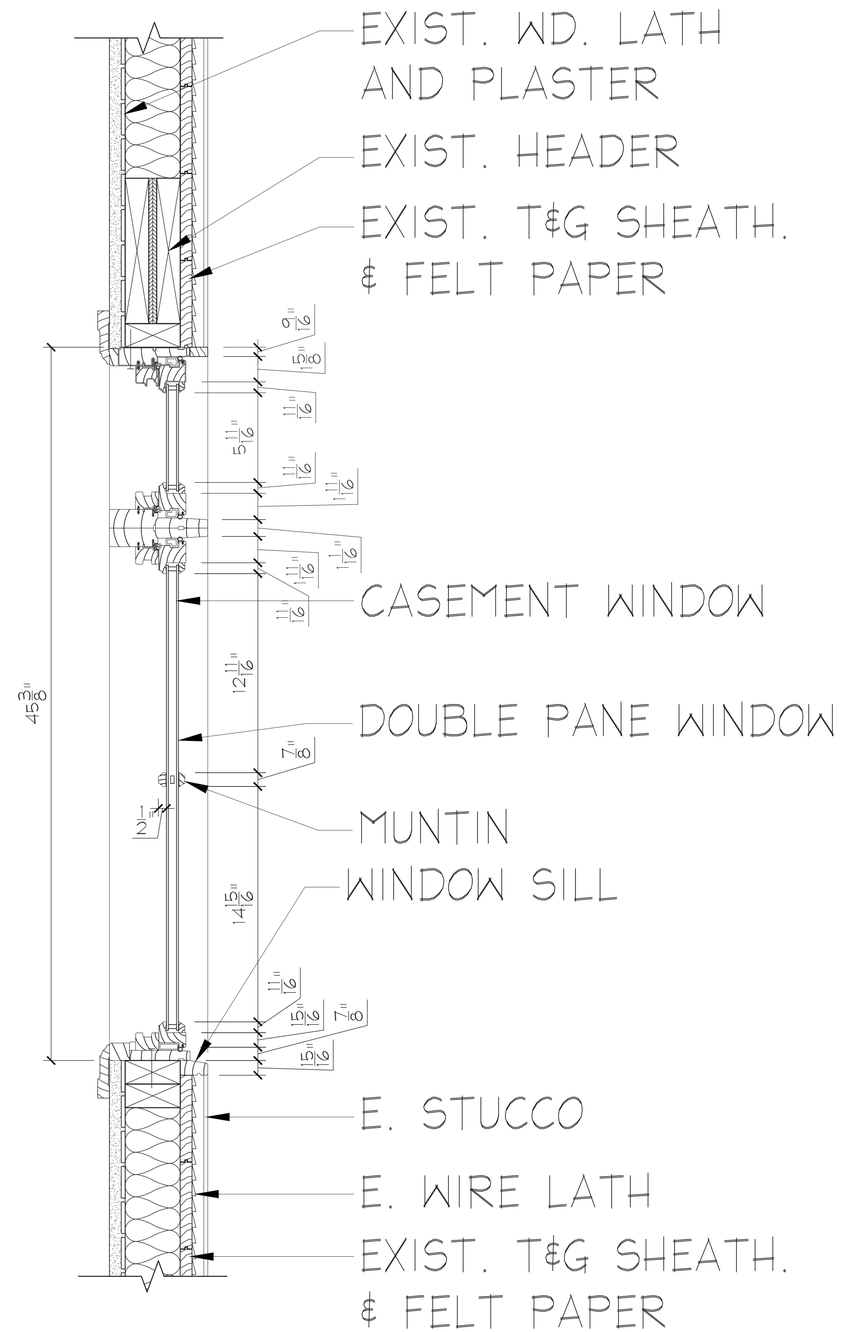

PROP. LUNETTE
WINDOW SECTION

JOHN STACOM ARCHITECTURAL DESIGN P.C.
38-08 BELL BOULEVARD BAYSIDE, NEW YORK - 11361
TEL. (718) 225-7755

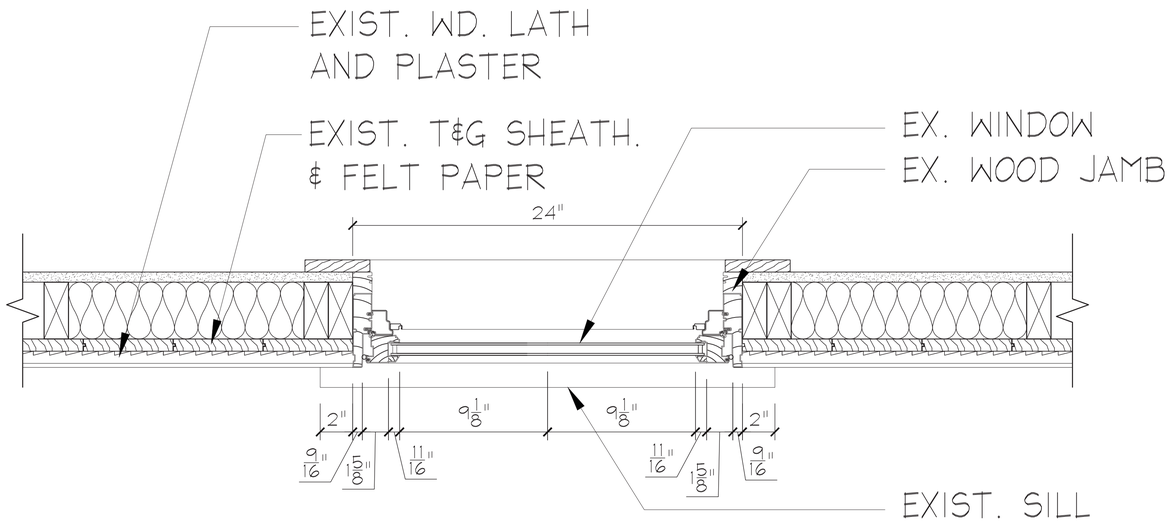

EXIST. HORIZONTAL LUNETTE SECTION DETAIL

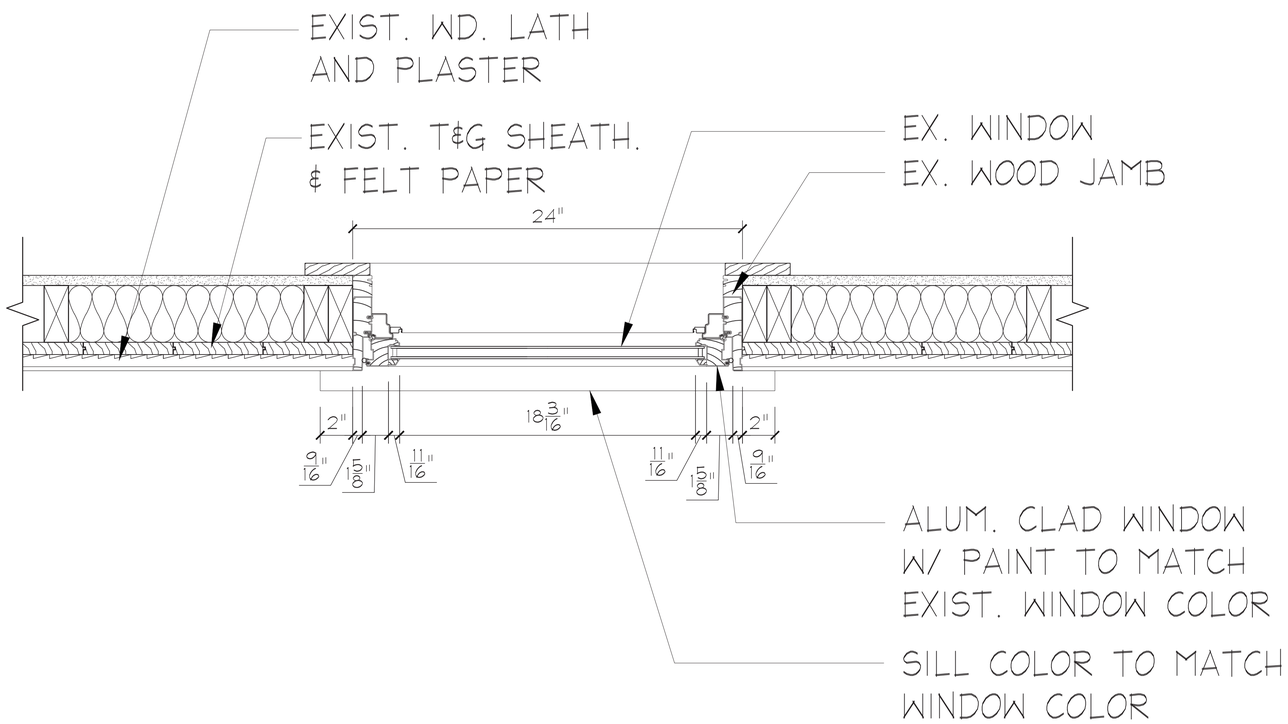

PROP. HORIZONTAL LUNETTE SECTION DETAIL

JOHN STACOM ARCHITECTURAL DESIGN P.C.
38-08 BELL BOULEVARD BAYSIDE, NEW YORK - 11361
TEL. (718) 225-7755

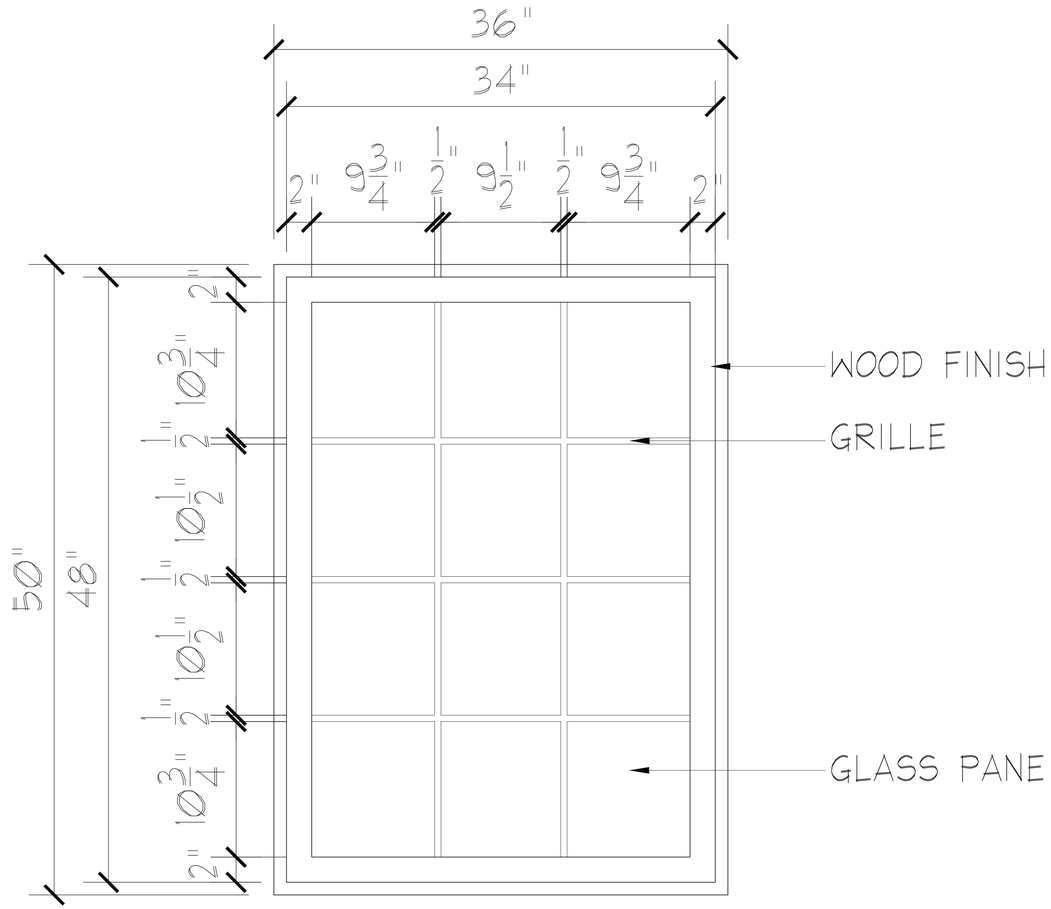

1 EXIST. WINDOW ELEVATION

WINDOW TYPE G Scale: 1"=1'-0"

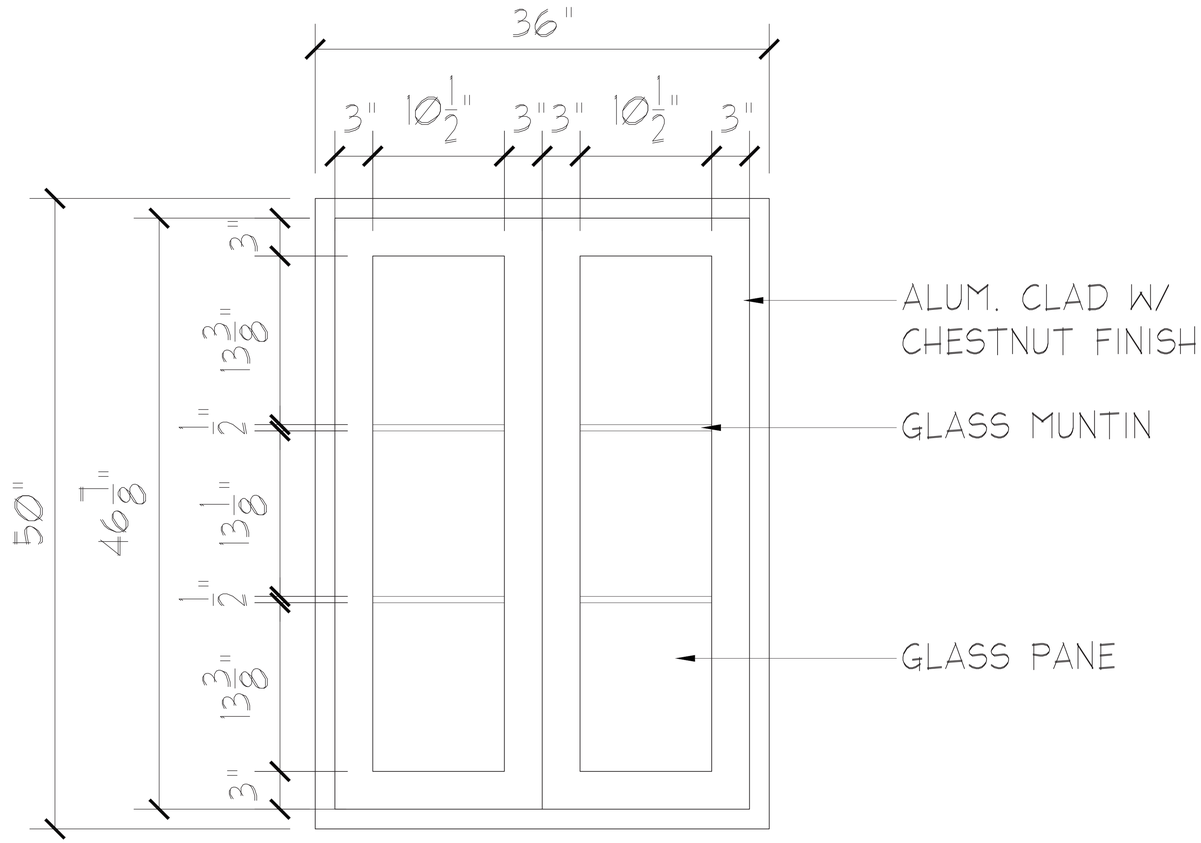

2 PROPOSED WINDOW ELEVATION

WINDOW TYPE G Scale: 1"=1'-0"

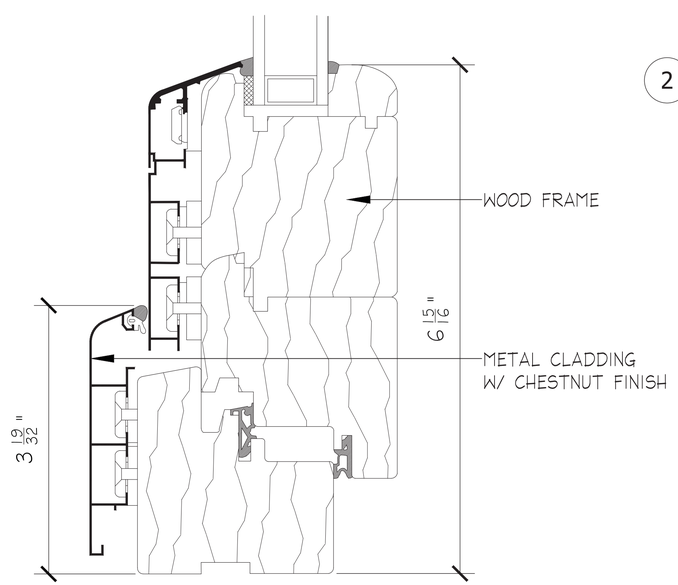

3 WINDOW JAMB DETAIL

N.T.S.

JOHN STACOM ARCHITECTURAL DESIGN P.C.
38-08 BELL BOULEVARD BAYSIDE, NEW YORK - 11361
TEL. (718) 225-7755

PRECENDENT WITH SIMILAR WINDOWS

PREVIOUS DWELLING CONDITION AT 102 PARK LANE

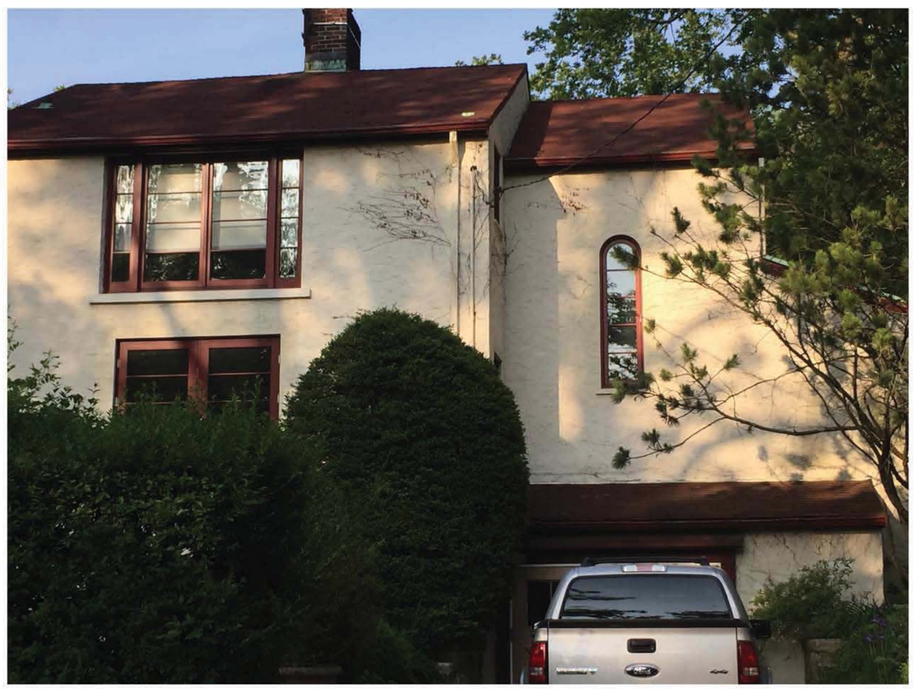

CURRENT DWELLING CONDITION AT 102 PARK LANE

JOHN STACOM ARCHITECTURAL DESIGN P.C.
38-08 BELL BOULEVARD BAYSIDE, NEW YORK - 11361
TEL. (718) 225-7755

PRECENDENT WITH SIMILAR WINDOWS

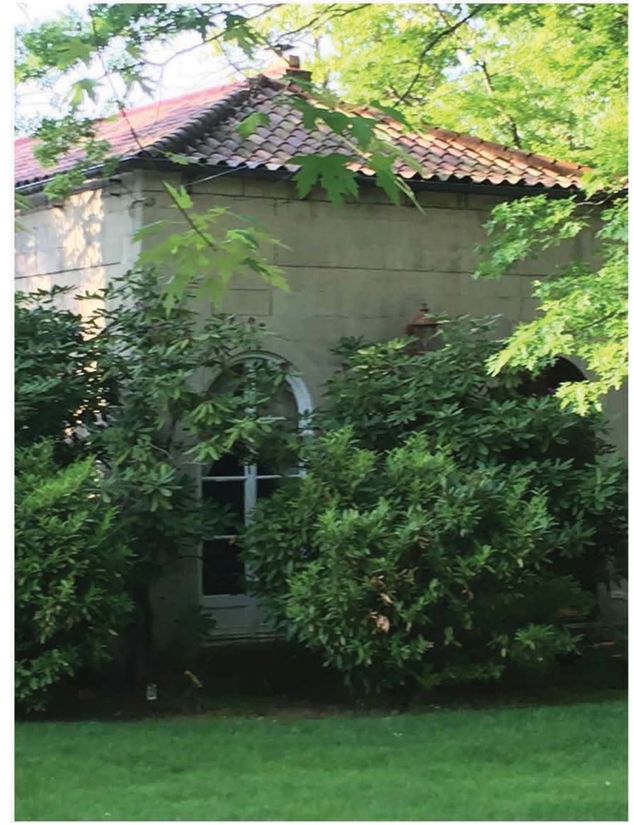

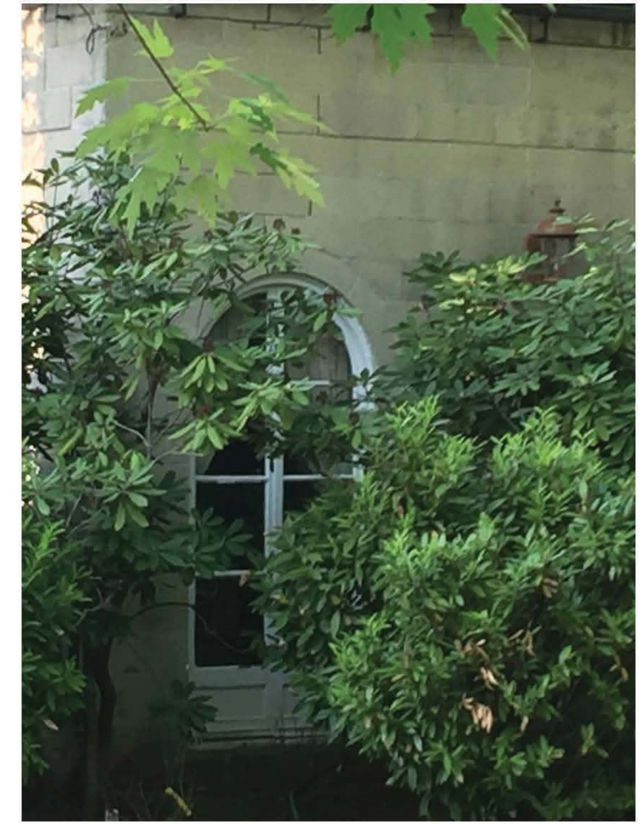

CURRENT DWELLING AT 231 BEVERLY ROAD

JOHN STACOM ARCHITECTURAL DESIGN P.C.
38-08 BELL BOULEVARD BAYSIDE, NEW YORK - 11361
TEL. (718) 225-7755

PRECEDENT WITH SIMILAR MEDITERRANEAN REVIVAL STYLE

5 GROSVENOR STREET

JOHN STACOM ARCHITECTURAL DESIGN P.C.
38-08 BELL BOULEVARD BAYSIDE, NEW YORK - 11361
TEL. (718) 225-7755

PRECEDENT WITH SIMILAR MEDITERRANEAN REVIVAL STYLE

303 KNOLLWOOD AVE.

JOHN STACOM ARCHITECTURAL DESIGN P.C.
38-08 BELL BOULEVARD BAYSIDE, NEW YORK - 11361
TEL. (718) 225-7755

1930'S & 1980'S TAX PHOTOS

1930'S TAX PHOTO

1980'S TAX PHOTO

JOHN STACOM ARCHITECTURAL DESIGN P.C.
38-08 BELL BOULEVARD BAYSIDE, NEW YORK - 11361
TEL. (718) 225-7755

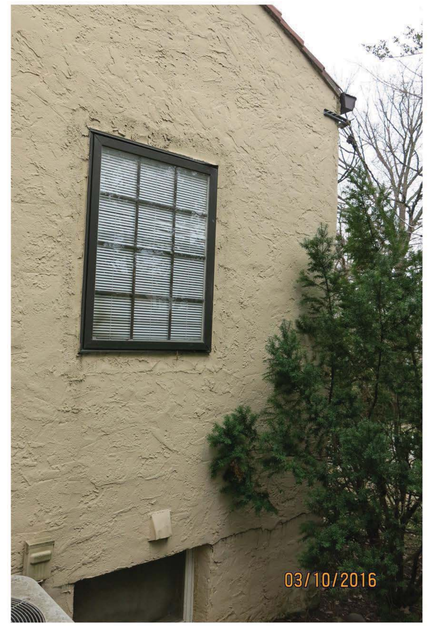

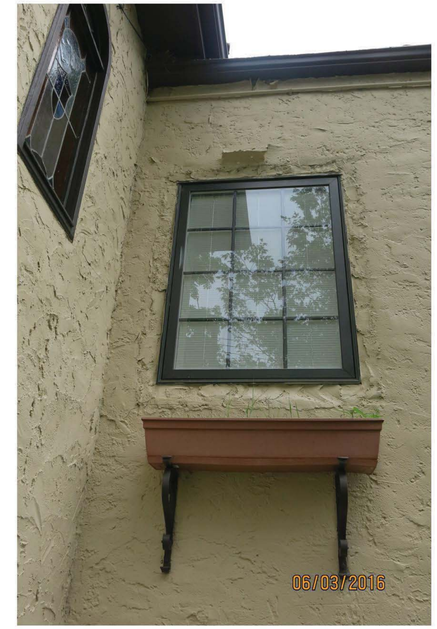

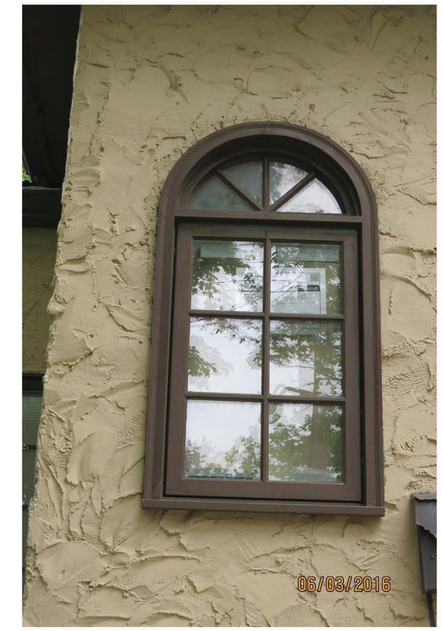

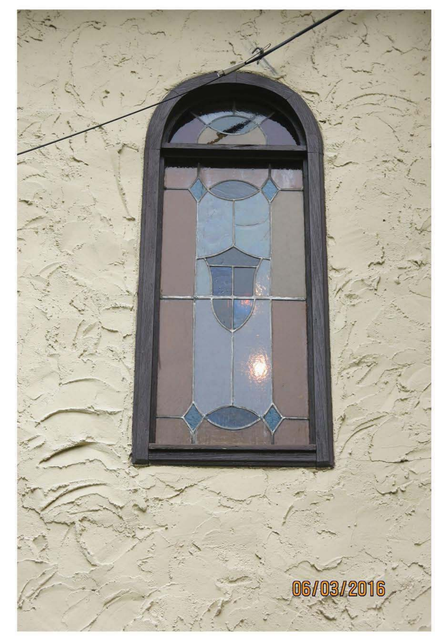

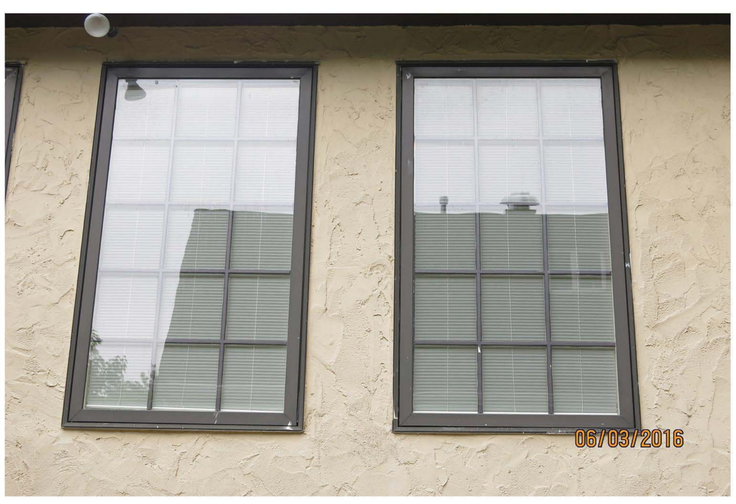

JOHN STACOM ARCHITECTURAL DESIGN P.C.
38-08 BELL BOULEVARD BAYSIDE, NEW YORK - 11361
TEL. (718) 225-7755

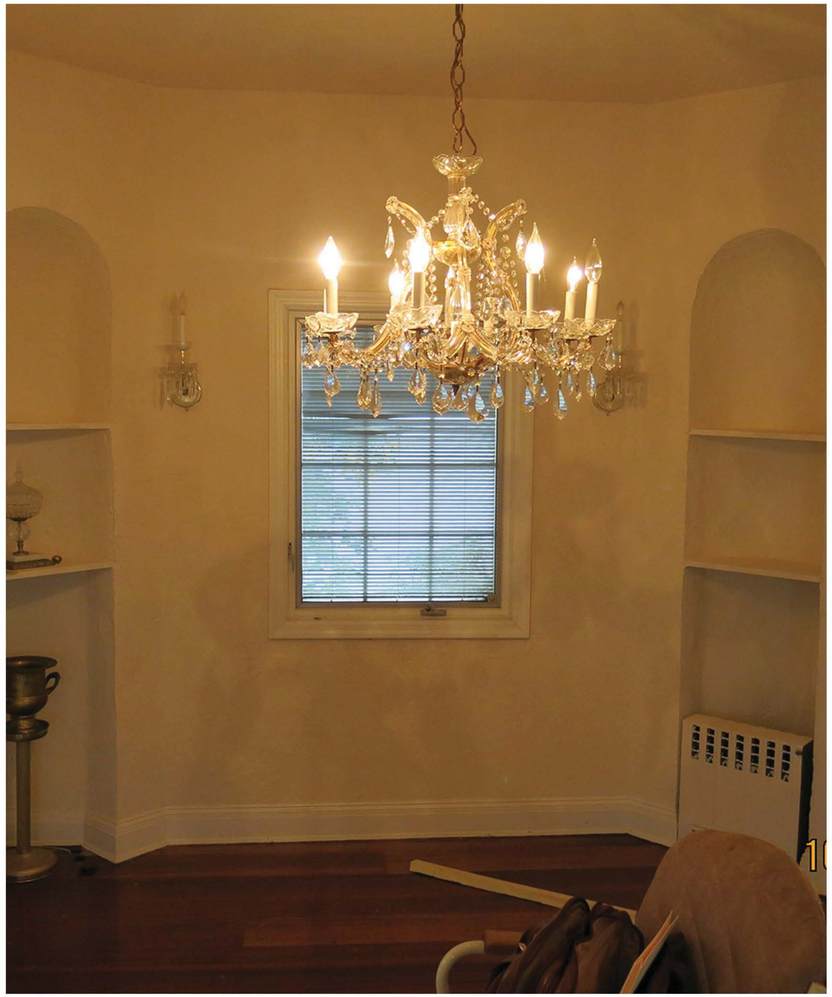

JOHN STACOM ARCHITECTURAL DESIGN P.C.
38-08 BELL BOULEVARD BAYSIDE, NEW YORK - 11361
TEL. (718) 225-7755

JOHN STACOM ARCHITECTURAL DESIGN P.C.
38-08 BELL BOULEVARD BAYSIDE, NEW YORK - 11361
TEL. (718) 225-7755