CITY PLANNING COMMISSION

February 19, 2014 Calendar No. 9 C 010415 MMK

IN THE MATTER OF an application, submitted by the Department of Transportation, pursuant to Sections 197-c and 199 of the New York City Charter, for an amendment to the City Map involving:

- the modification of legal grades on Union Street between Classon Avenue and Franklin Avenue;

in Community District 9, Borough of Brooklyn, in accordance with Map No. X-2637 dated September 30, 2010, and signed by the Borough President.

The application (C 010415 MMK) for an amendment to the City Map was filed by the Department of Transportation on February 23, 2001 in order to facilitate the reconstruction of the Union Street Bridge over the New York City Transit Franklin Avenue shuttle and its approaches between Classon Avenue and Franklin Avenue in Brooklyn.

BACKGROUND

The Department of Transportation (DOT) is requesting a change to the City Map to reflect the reconstruction of the Union Street Bridge over the New York City Transit Franklin Avenue shuttle and its approaches between Classon Avenue and Franklin Avenue, in the Crown Heights neighborhood of Brooklyn. The reconstruction of the bridge and it approaches was completed in 1999. DOT requests that the legal grades on the City Map be modified to reflect the new grades used for the reconstruction of the bridge.

Reconstruction of the approximately 45-foot-long bridge included replacement of bridge structural and safety members and reconstruction of the roadway pavement and sidewalks. The reconstructed section of Union Street is City-owned, open to one-way eastbound traffic and is mapped to a width of 70 feet. The area affected by the grade change is approximately 305 feet in length. The modification of grades is due to the bridge profile being changed to more closely reflect the existing grade and to ensure minimal impact on abutting properties. The maximum change in legal grade is approximately twelve inches.

The Franklin Avenue shuttle is a shuttle service running between Prospect Park and Franklin Avenue providing an important connection between the A&C Subway lines and the B&Q Subway Lines. The site is located within R6A and R8A residential districts. The surrounding area is predominately developed with residential and commercial uses.

In response to a polling letter issued to affected City agencies and utilities, no agencies had indicated any opposition to the proposed map change.

ENVIRONMENTAL REVIEW

This application (C 010415 MMK) was reviewed pursuant to the New York State Environmental Quality Review Act (SEQRA), and the SEQRA regulations set forth in Volume 6 of the New York Code of Rules and Regulations, Section 617.00 et seq., and the City Environmental Quality Review (CEQR) Rules of Procedure of 1991 and Executive Order No. 91 of 1977. The designated CEQR Number is 01DOT005K. The lead agency is the Department of Transportation. This application was determined to be a Type II action which requires no further review.

UNIFORM LAND USE REVIEW

This application (C 010415 MMK), was certified as complete by the Department of City Planning on October 21, 2013, and was duly referred to Community Board 9 and the Brooklyn Borough President in accordance with Title 62 of the Rules of the City of New York, Section 2-02(b).

Community Board Public Hearing

Community Board 9 held a public hearing on this application (C 010415 MMK) on December 17, 2013, and on the same day, by a vote of 28 to 0 with 0 abstentions, adopted a resolution recommending approval of the application.

Borough President Recommendation

This application (C 010415 MMK) was considered by the Borough President of Brooklyn, who issued a recommendation approving the application on December 23, 2013.

City Planning Commission Public Hearing

On January 8, 2014 (Calendar No.4) the City Planning Commission scheduled January 22, 2014 for a public hearing on this application (C 010415 MMK). The hearing was duly held on January 22, 2014 (Calendar No. 6).

There were no speakers on this application and the hearing was closed.

CONSIDERATION

The City Planning Commission believes that this amendment to the City Map is appropriate. The Commission notes that many of the city's 1,500 bridges, which are owned, operated and maintained by DOT, are nearly a century old, and from time to time need to be replaced. Such was the case with the subject bridge on Union Street. The Commission further notes that the elevations of the bridge profile and approaches on Union Street required minor modification. The Commission believes that proposed grade changes are necessary to accommodate the new structure and complete the reconstruction of a formerly failing bridge.

RESOLUTION

Therefore, the City Planning Commission, deeming the proposed amendment to the City Map and any related acquisition or disposition to be appropriate, adopts the following resolution:

RESOLVED, that the City Planning Commission finds that the action described herein will have no significant impact on the environment; and be it further

RESOLVED, by the City Planning Commission, pursuant to Sections 197-c and 199 of the New York City Charter, that based on the environmental determination and the consideration described in this report, the application (C 010415 MMK) for the amendment to the City Map

involving the modification of legal grades on Union Street between Classon Avenue and Franklin Avenue, in Community District 9, Borough of Brooklyn, in accordance with Map No. X-2637 dated September 30, 2010 and signed by the Borough President, is approved;

All such approvals being subject to the following condition:

The subject amendment to the City Map shall take effect on the day following the day on which certified counterparts of Map No. X-2637 are filed with the appropriate agencies in accordance with Section 198 subsection c of the New York City Charter.

The above resolution (C 010415 MMK), duly adopted by the City Planning Commission on February 19, 2014 (Calendar No. 9), is filed with the Office of the Speaker, City Council and the Borough President, in accordance with the requirements of Section 197-d of the New York City Charter.

KENNETH J. KNUCKLES, *Esq.*, Vice Chairman
ANGFELA M. BATTAGLIA, IRWIN G. CANTOR, *P.E.*,
ALFRED C. CERULLO, *III*, BETTY Y. CHEN, MICHELLE R. DE LU HUZ
MARIA M. DEL TORO, JOSEPH I. DOUEK, RICHARD W. EADDY,
ANNA HAYES LEVIN, ORLANDO MARIN, Commissioners

C.D.9

C010415 MMK
Refer to Alt. Map. No. X-2637

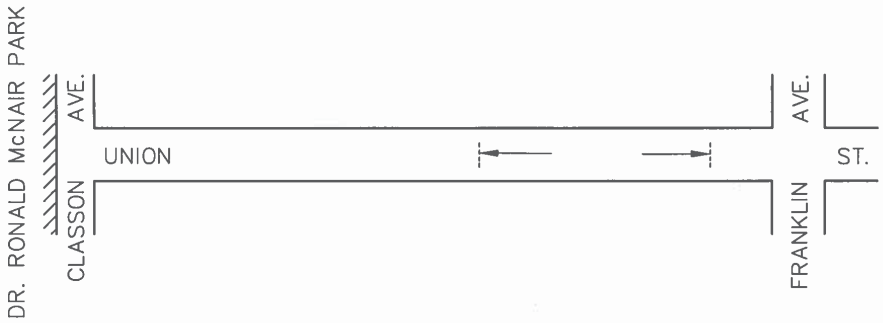

CITY PLANNING COMMISSION
CITY OF NEW YORK

DIAGRAM SHOWING PROPOSED

MAP CHANGE

ON SECTIONAL MAP

16

BOROUGH OF

BROOKLYN

Chief Engineer

New York, Certification Date
OCTOBER 21, 2013

SCALE IN FEET

200 0 200

NOTE:

Indicates line of street legally adopted.

Indicates Park line heretofore established and hereby retained.

Indicates limits of area generally affected by grade change.

THIS DIAGRAM IS FOR ILLUSTRATIVE PURPOSES ONLY.

NYCPLANNING
DEPARTMENT OF CITY PLANNING CITY OF NEW YORK

Community/Borough Board Recommendation

Pursuant to the Uniform Land Use Review Procedure

Application #: **C 010415 MMK**	Project Name: **UNION STREET GRADE CHANGES**
CEQR Number: 01DOT005K	Borough(s): Brooklyn Community District Number(s): 09

Please use the above application number on all correspondence concerning this application

SUBMISSION INSTRUCTIONS

1. Complete this form and return to the Department of City Planning by one of the following options:
   - **EMAIL (recommended):** Send email to **CalendarOffice@planning.nyc.gov** and include the following subject line: (CB or BP) Recommendation + (6-digit application number), e.g., "CB Recommendation #C100000ZSQ"
   - **MAIL:** Calendar Information Office, City Planning Commission, Room 2E, 22 Reade Street, New York, NY 10007
   - **FAX:** (212) 720-3356 and note "Attention of the Calendar Office"
2. Send one copy of the completed form with any attachments to the applicant's representative at the address listed below, one copy to the Borough President, and one copy to the Borough Board, when applicable.

Docket Description:

IN THE MATTER OF an application, submitted by the Department of Transportation, pursuant to Sections 197-c and 199 of the New York City Charter, for an amendment to the City Map involving:

- the modification of grades in Union Street between Classon Avenue and Franklin Avenue,

in Community District 9, Borough of Brooklyn in accordance with Map No. X-2637 dated September 30, 2010 and signed by the Borough President.

Applicant(s):	Applicant's Representative:
Department of Transportation 55 Water Street New York, New York 10041	Ristina Nessel Department of Transportation 55 Water Street - 5th Floor New York, New York 10041 212-839-6372

Recommendation submitted by:
Brooklyn Community Board 9

Date of public hearing: 12/17/13 **Location:** 400 EMPIRE Blvd BROOKLYN, NY 11225

Was a quorum present? YES [X] NO [ ]

A public hearing requires a quorum of 20% of the appointed members of the board, but in no event fewer than seven such members.

Date of Vote: 12/17/13 **Location:** SAME

RECOMMENDATION

- [X] Approve
- [ ] Approve With Modifications/Conditions
- [ ] Disapprove
- [ ] Disapprove With Modifications/Conditions

Please attach any further explanation of the recommendation on additional sheets, as necessary.

Voting
 # In Favor: 28 **# Against:** 0 **# Abstaining:** 0 **Total members appointed to the board:** 46

Name of CB/BB officer completing this form	*Title*	*Date*
Pearl R Miles	District Mgr.	12/19/13

Brooklyn Borough President Recommendation

CITY PLANNING COMMISSION
22 Reade Street, New York, NY 10007
FAX # (212) 720-3356

INSTRUCTIONS

1. Return this completed form with any attachments to the Calendar Information Office, City Planning Commission, Room 2E at the above address.

2. Send one copy with any attachments to the applicant's representatives as indicated on the Notice of Certification.

APPLICATION #: 010345 MMK, 010371 MMK, 010415 MMK

Montgomery, President and Union Streets Grade Changes

In the matter of applications, submitted by the Department of Transportation, pursuant to Sections 197-c and 199 of the New York City Charter, for an amendment of the City Map to allow the modification of legal grades in the following streets: Montgomery Street between Washington Avenue and Franklin Avenue; and President and Union Streets between Classon Avenue and Franklin Avenue, to reflect actual constructed conditions of the bridge over the transit right-of-way.

COMMUNITY DISTRICT NO. 9 BOROUGH OF BROOKLYN

RECOMMENDATION

☒ APPROVE
☐ APPROVE WITH MODIFICATIONS/CONDITIONS

☐ DISAPPROVE
☐ DISAPPROVE WITH MODIFICATIONS/CONDITIONS

Be it resolved that the Borough President of Brooklyn, pursuant to section 197-c of the New York City Charter, recommends that the City Planning Commission and City Council approve the applications for the modification of grade changes in Montgomery Street between Washington Avenue and Franklin Avenue and President and Union Streets between Franklin and Classon Avenues.

BOROUGH PRESIDENT

December, 23 2013
DATE