# ZONING FOR
# QUALITY AND AFFORDABILITY
# TEXT AMENDMENT

Matter in underline is new, to be added;
Matter in ~~strikeout~~ is to be deleted;
Matter within # # is defined in Section 12-10;
* * * indicates where unchanged text appears in the Zoning Resolution

## Article I - General Provisions

**Chapter 1**
**Title, Establishment of Controls and Interpretation of Regulations**

* * *

**11-00**
**Title**

* * *

**11-01**
**Long Title**

A Resolution regulating the height and bulk of buildings and other structures, regulating and determining the area of yards, courts and other open spaces, and the density of population, and regulating and restricting the location of trades and industries and the location of buildings designed for specific uses within the City of New York, and for such purposes dividing the City into districts.

**11-02**
**Short Title**

This Resolution shall be known and may be cited as the Zoning Resolution of the City of New York.

* * *

**11-20**
**INTERPRETATION OF PROVISIONS**

*  *  *

**11-23**
**Demolition and Replacement**

The alteration of an existing #building# resulting in both the removal of more than 75 percent of the #floor area# and more than 25 percent of the perimeter walls of such existing #building#, and the replacement of any amount of #floor area#, shall be considered a #development# for the purposes of the following provisions. The provisions of this Section shall apply notwithstanding the provisions of Article V (Non-Conforming Uses and Non-Complying Buildings). However, these provisions shall not apply where the #building# to be replaced is a #single-# or #two-family residence# utilizing the provisions of Article V.

| | |
|---|---|
| Section 23-03 | (Street Tree Planting in Residence Districts) |
| Section 23-04 | (Planting Strips in Residence Districts) |
| Section 33-03 | (Street Tree Planting in Commercial Districts) |
| Section 37-35 | (Parking Wrap and Screening Requirements ~~Retail Continuity~~) |
| Section 37-40 | (OFF-STREET RELOCATION OR RENOVATION OF A SUBWAY STAIR) |
| Section 81-42 | (Retail Continuity along Designated Streets) |
| Section 81-46 | (Off-Street Relocation or Renovation of a Subway Stair) |
| Section 81-72 | (Use Regulations Modified) |
| Section 82-12 | (Mandatory Off-Street Relocation of a Subway Stair) |
| Section 82-23 | (Street Wall Transparency) |
| Section 91-12 | (Uses on Designated Retail Streets) |
| Section 91-41 | (Regulations for Designated Retail Streets) |
| Section 91-43 | (Off-Street Relocation or Renovation of a Subway Stair) |
| Section 93-14 | (Ground Floor Level Requirements) |
| Section 93-65 | (Transit Facilities) |
| Section 93-66 | (Open Area Requirements in the Large-Scale Plan Subdistrict A) |

| | |
|---|---|
| Section 93-70 | (PUBLIC ACCESS REQUIREMENTS FOR SPECIAL SITES) |
| Section 95-03 | (Transit Easement) |
| Section 95-04 | (Certification of Transit Easement Volume) |
| Section 95-08 | (Special Use Regulations) |
| Section 97-12 | (Arts and Entertainment Use Requirement) |
| Section 97-22 | (Uses Not Permitted on the Ground Floor of Buildings) |
| Section 97-23 | (Transparency Requirements) |
| Section 98-14 | (Ground Floor Use and Transparency Requirements on Tenth Avenue) |
| Section 98-53 | (Required Open Areas on the East Side of the High Line) |
| Section 98-54 | (Transparency Requirements on the East Side of the High Line) |
| Section 98-60 | (SPECIAL ACCESS REGULATIONS FOR CERTAIN ZONING LOTS) |
| Section 101-11 | (Special Ground Floor Use Regulations) |
| Section 101-12 | (Transparency Requirements) |
| Section 101-43 | (Off-street Relocation or Renovation of a Subway Stair) |
| Section 108-30 | (MODIFICATION OF STREET TREE REQUIREMENTS) |
| Section 109-132 | (Treatment of the ground level wall) |
| Section 109-21 | (Use Regulations) |
| Section 109-33 | (Special Front Wall Regulations) |
| Section 115-14 | (Transparency Requirement in C4-5X and C6 Districts) |
| Section 116-12 | (Mandatory Ground Floor Use and Frontage Requirements) |
| Section 116-13 | (Transparency Requirements) |
| Section 117-31 | (Special Use Regulations) |

| | |
|---|---|
| Section 117-42 | (Special Bulk and Use Regulations in the Court Square Subdistrict) |
| Section 117-44 | (Mandatory Subway Improvements) |
| Section 117-45 | (Developer's Notice) |
| Section 117-513 | (Transparency requirement) |
| Section 117-553 | (Mandatory sidewalk widening) ~~and ground floor uses), paragraph (b)~~ |
| Section 118-40 | (ENTRANCE AND STREET WALL TRANSPARENCY REQUIREMENTS) |
| Section ~~118-60~~118-50 | (OFF-STREET RELOCATION OF A SUBWAY STAIR WITHIN THE SPECIAL UNION SQUARE DISTRICT) |
| Section 119-112 | (Tier I tree planting requirements) |
| Section 119-216 | (Tier II tree planting requirements) |
| Section 122-50 | (SPECIAL PROVISIONS FOR PLANTING STRIPS) |
| Section 124-30 | (MANDATORY IMPROVEMENTS) |
| Section 124-40 | (PUBLICLY ACCESSIBLE OPEN SPACE REQUIREMENTS) |
| Section 126-21 | (Street Tree Planting) |

* * *

# Article I - General Provisions

**Chapter 2**
**Construction of Language and Definitions**

*  *  *

**12-10**
**DEFINITIONS**

Words in the text or tables of this Resolution which are #italicized# shall be interpreted in accordance with the provisions set forth in this Section.

*  *  *

Adult physical culture establishments

An "adult physical culture establishment," is any establishment, club or business by whatever name designated which offers or advertises or is equipped or arranged so as to provide as part of its services, massages, body rubs, alcohol rubs, baths or other similar treatment, by members of the opposite sex, except for activities which are excluded below or defined under #physical culture or health establishment# in Section 12-10 and which are, therefore, not included within the definition of an #adult physical culture establishment#:

(1) treatment by a licensed physician, a licensed chiropractor, a licensed osteopath, a New York licensed masseur or masseuse, a licensed practical nurse or a registered professional nurse;

(2) electrolysis treatment by a licensed operator of electrolysis equipment;

(3) hospitals, ~~nursing home~~ #long-term care facilities# , or ambulatory diagnostic or treatment health care facilities listed in Use Group 4 ;

(4) barbershops or beauty parlors which offer massage to the scalp, the face, the neck or shoulders only; and

(5) athletic facilities of an educational institution including an alumni club, or of a philanthropic or charitable institution.

*  *  *

Affordable independent residence for seniors

An "affordable independent residence for seniors" is a #building# containing #residences#, or portion thereof, in which at least 90 percent of the #dwelling units# are each occupied by at least one person who is 62 years of age or over; where, except for a #super's unit#, all of the #dwelling units# are #income-restricted housing units# used for class A occupancy as defined in the New York State Multiple Dwelling Law. For the purposes of this definition, #super's unit#, shall be as defined in Section 23-911 (General definitions).

An #affordable independent residence for seniors# may consist of one or more #buildings# on the same or contiguous #zoning lots#, or on lots which would be contiguous but for their separation by a #street#, and shall contain related #accessory# social and welfare facilities primarily for #residents#, such as cafeterias or dining halls, community rooms, workshops and other essential service facilities, which may also be made available to the community. Floor space in an amount not less than four percent of the total #floor area# of such #affordable independent residence for seniors# shall be allocated to such #accessory# facilities. Such floor space may occupy #floor area# or #cellar# space, and may include indoor recreation space provided in accordance with Section 28-31 (Required Recreation Space) for #Quality Housing buildings#. In no event shall the floor space occupied by lobbies, passageways, storage space or other spaces normally provided in #residential buildings# be attributed to the #floor area# of the #accessory# social and welfare facilities.

An #affordable independent residence for seniors# shall also include a #building used, enlarged or developed# prior to [date of adoption] as a non-profit residence for the elderly.

* * *

Base plane

The “base plane” is a plane from which the height of a #building or other structure# is measured as specified in certain Sections. For #buildings#, portions of #buildings# with #street walls# at least 15 feet in width, or #building segments# within 100 feet of a #street line#, the level of the #base plane# is any level between #curb level# and #street wall line level#. Beyond 100 feet of a #street line#, the level of the #base plane# is the average elevation of the final grade adjoining the #building# or #building segment#, determined in the manner prescribed by the Building Code of the City of New York for adjoining grade elevation. In either case, in the #flood zone#, either the #base flood elevation# may be the level of the #base plane# or #building# height may be measured from the #flood-resistant construction elevation#, as provided in Article VI, Chapter 4. For the purposes of this definition, #abutting buildings# on a single #zoning lot# may be considered a single #building#. In addition, the following regulations shall apply:

(a) Within 100 feet of a #street line#:

(1) The level of the #base plane# for a #building# or #building segment# without a #street wall# shall be determined by the average elevation of the final grade adjoining such #building# or #building segment#.

* * *

(4) As an option, on sites which slope from the #street wall line level# to the #rear wall line level# by at least ~~ten~~ five percent to the horizontal, the level of the #base plane# may extend in a sloping plane from such #street wall line level# to such #rear wall line level#. When a sloping #base plane# is thus established, the average elevation of the final grade at the #rear wall line# shall not be lower than the #rear wall line level#.

*  *  *

Floor area

"Floor area" is the sum of the gross areas of the several floors of a #building# or #buildings#, measured from the exterior faces of exterior walls or from the center lines of walls separating two #buildings#. In particular, #floor area# includes:

(a) #basement# space, except as specifically excluded in this definition;

*  *  *

(f) floor space in open or roofed ~~terraces,~~ bridges, breeze ways or porches, if more than 50 percent of the perimeter of such ~~terrace,~~ breeze way, or porch is enclosed, and provided that a parapet not higher than 3 feet, 8 inches, or a railing not less than 50 percent open and not higher than 4 feet, 6 inches, shall not constitute an enclosure;

*  *  *

(n) floor space in exterior balconies <u>or in open or roofed terraces</u> if more than 67 percent of the perimeter of such balcony <u>or terrace</u> is enclosed and provided that a parapet not higher than 3 feet, 8 inches, or a railing not less than 50 percent open and not higher than 4 feet, 6 inches, shall not constitute an enclosure. A sun control device that is accessible for purposes other than for maintenance shall be considered a balcony; and

*  *  *

However, the #floor area# of a #building# shall not include:

(1) #cellar# space, except where such space is used for dwelling purposes. #Cellar# space used for retailing shall be included for the purpose of calculating requirements for #accessory# off-street parking spaces, #accessory# bicycle parking spaces and #accessory# off-street loading berths;

*  *  *

(5) floor space in open or roofed ~~terraces,~~ bridges, breeze ways or porches, provided that not more than 50 percent of the perimeter of such ~~terrace,~~ <u>bridges,</u> breeze way<u>s</u>~~,~~ or porch is enclosed, and provided that a parapet not higher than 3 feet, 8 inches, or a railing not less than 50 percent open and not higher than 4 feet, 6 inches, shall not constitute an enclosure;

*  *  *

(10) floor space in exterior balconies <u>or in open or roofed terraces</u> provided that not more than 67 percent of the perimeter of such balcony <u>or terrace</u> is enclosed and provided that a parapet not higher than 3 feet, 8

inches, or a railing not less than 50 percent open and not higher than 4 feet, 6 inches, shall not constitute an enclosure. A sun control device that is accessible for purposes other than for maintenance shall be considered a balcony;

*  *  *

Height factor

The “height factor” of a #zoning lot# is equal to the total #floor area# of a #building# divided by its #lot coverage#. If two or more #buildings# are located on the same #zoning lot#, the #height factor# is the sum of their #floor areas# divided by the sum of their #lot coverages#.

~~The #height factor# is thus equal to the number of #stories#, if the #building# were erected without setbacks. In computing a #height factor#, a fraction of .5 or more may be considered a whole number, and smaller fractions shall be disregarded.~~

For example, a #zoning lot# with a #residential building# containing 60,000 square feet of #floor area# and a #lot coverage# of 5,000 square feet has a #height factor# of 12, and a #zoning lot# with two #residential buildings# containing a total of 80,000 square feet of #floor area# and 10,000 square feet of total #lot coverage# has a #height factor# of 8.

In computing a #height factor#, a fraction of .5 or more may be considered a whole number, and smaller fractions shall be disregarded.

*  *  *

Income-restricted housing unit

An “income-restricted housing unit” is a #dwelling unit# that complies with the definition of #affordable housing unit# set forth in Section 23-911 (General definitions), or any other #dwelling unit# with a legally binding restriction on household income at or below 80 percent of the #income index#, as prescribed by a City, State, or Federal agency, law, or regulation, for a period of not less than 30 years. For the purposes of this definition, #income index# shall be as defined in Section 23-911 (General definitions).

Any #dwelling unit# for which the applicable number of required #accessory# off-street parking spaces was established pursuant to the provisions of Section 25-25 (Modification of Requirements for Public, Publicly-Assisted and Government Assisted Housing or for Non-profit Residences for the Elderly) as such Section existed between December 15, 1961 and [date of adoption] shall be considered an #income-restricted housing unit#. In addition, #dwelling units# in public housing developments owned by the New York City Housing Authority for which the applicable number of required #accessory# off-street parking spaces was established pursuant to the zoning regulations in effect between July 20, 1950 and December 15, 1961 shall be considered #income-restricted housing units#.

*  *  *

Long-term care facility

A “long-term care facility” is a #community facility use# that has secured appropriate certificate of authority or licensure by the New York State Department of Health and shall include:

(a) nursing homes or assisted living facilities as defined in the Public Health Law; and

(b) continuing care retirement communities, consisting of independent living #dwelling units# in addition to nursing home beds and assisted living facilities as defined in the New York State Public Health Law. Such continuing care retirement communities may be located in one or more #buildings# on the same or contiguous #zoning lots#, or on lots which would be contiguous but for their separation by a #street#. All such continuing care retirement communities shall:

(1) offer a life care contract that includes unlimited long-term care services along with housing for independent living and #residential# services and amenities; and

(2) include fewer independent living #dwelling units# than the combined number of assisted living #dwelling units# or #rooming units# and nursing home beds on such same or contiguous #zoning lots#, or on lots which would be contiguous but for their separation by a #street#. For the purposes of this calculation, the number of such assisted living #dwelling units# or #rooming units# shall be the number of such units in the State-licensed assisted living facilities or assisted living #residences#; and the number of such nursing home beds shall be the number of authorized State-licensed nursing home beds, as applicable. For the purposes of this definition, the term #rooming units# shall be as defined in the New York City Housing Maintenance Code.

However, if a continuing care retirement community does not comply with conditions (1) or (2) above, the independent living #dwelling units# shall be considered a #residential use#.

* * *

Lot coverage

“Lot coverage” is that portion of a #zoning lot# which, when viewed directly from above, would be covered by a #building# or any part of a #building#. However, for purposes of computing a #height factor#, any portion of such #building# covered by a roof which qualifies as #open space#, or any terrace, balcony, breeze way, or porch or portion thereof not included in the #floor area# of a #building#, shall not be included in #lot coverage#.

For example, a #zoning lot# of 20,000 square feet consists of one portion, 100 feet by 100 feet, as a #corner lot# portion, and another portion, 100 feet by 100 feet, as an #interior lot# portion. In a district that allows 70 percent coverage of the #interior lot# portion, that portion can have a #lot coverage# of 7,000 square feet, while the #corner lot# portion which is allowed 100 ~~80~~ percent coverage can have a #lot coverage# of 10,000 ~~8,000~~ square feet.

When a #height factor# is not computed for a #residential building# or #residential# portion of a #building#, obstructions permitted pursuant to Section 23-44 (Permitted Obstructions in Required Yards or Rear Yard Equivalents) shall not be included in #lot coverage#, except that the portion of any balcony which does not project from the face of the #building# shall be counted as #lot coverage#.

~~When a #height factor# is not computed for a #residential building# or #residential# portion of a #building#, the portion of any balcony which does not project from the face of the #building# shall be counted as #lot coverage#, but other obstructions permitted pursuant to Section 23-44 (Permitted Obstructions in Required Yards or Rear Yard Equivalents) shall not be included in #lot coverage#.~~

* * *

~~Non-profit residence for the elderly~~

~~A "non-profit residence for the elderly" is a #residence# occupied at least 90 percent by elderly families, the head or spouse of which is sixty-two years of age or over, or by single elderly persons who are sixty-two years of age or over, and which:~~

~~(a) contains housekeeping, semi-housekeeping or non-housekeeping units especially designed for elderly persons or families; and~~

~~(b) consists of one or more #buildings# on the same or contiguous #zoning lots#, or on lots which would be contiguous but for their separation by a #street# and contains related #accessory# social and welfare facilities primarily for residents which may also be made available to the community, such as cafeterias, or dining halls, community rooms, workshops and other essential service facilities provided that these facilities shall occupy #floor area# or #cellar# space in an amount not less than four percent of the total #floor area# of the #non-profit residence for the elderly#. In no event shall the floor space occupied by lobbies, passageways, storage space or other spaces normally provided in usual #residential buildings# be considered as a part of the #floor area# attributable to the Social and Welfare facilities; and~~

~~(c) is either:~~

~~(1) owned by or constructed for the New York City Housing Authority, or~~

~~(2) constructed with the assistance of mortgage financing or other financial assistance insured by or procured through or with the assistance of a municipal, State, or Federal governmental agency, and is maintained on a non-profit basis by a charitable organization or its wholly-owned subsidiary incorporated pursuant to the provisions of the New York State Not-For-Profit Corporation Law.~~

~~However, any #non-profit residence for the elderly# to which seed money has been advanced under Article II of the State Private Housing Finance Law prior to January 23, 1969 shall have the option to be continued under the provisions of the Zoning Resolution as amended on January 23, 1969 or under the provisions of the Zoning Resolution as effective just prior thereto.~~

~~In the Borough of Manhattan in R7-2 Districts, the definition of a #non-profit residence for the elderly# shall also apply to projects reserved for the elderly for a period of not less than 40 years approved under Article 2 and 5 of the State Private Housing Finance Law provided the project is operated by a sponsor or co-sponsor which is a non-profit organization. The certificate of occupancy shall bear the designation "Non-profit residence for the elderly," as defined in Section 12-10 of the Zoning Resolution.~~

* * *

Predominantly built-up area

A "predominantly built-up area" is a #block# entirely within R4 or R5 Districts, including a #Commercial District# mapped within such #Residential Districts#, having a maximum area of four acres with #buildings# on #zoning lots# comprising 50 percent or more of the area of the #block#. However, a #predominantly built-up area# shall not include a #block# which is located partly in a R4A, R4-1, R4B, R5B or R5D District.

All such #buildings# shall have certificates of occupancy or other evidence acceptable to the Commissioner of Buildings issued not less than three years prior to the date of application for a building permit. Special optional regulations applying only to #zoning lots# of not more than 1.5 acres in a #predominantly built-up area# are set forth in the following Sections:

| | |
|---|---|
| Section 23-143 | (~~Minimum Required Open Space, Open Space Ratio, Maximum Lot Coverage and Maximum Floor Area Ratio~~ Optional regulations for predominantly built-up areas) |
| Section 23-22 | (~~Required Lot Area per Dwelling Unit, Lot Area per Room or Floor Area per Room~~ Maximum Number of Dwelling Units) |
| Section 23-44 | (Permitted Obstructions in Required Yards or Rear Yard Equivalents) |
| Section 23-631 | (~~Height and setback in R1, R2, R3, R4 and R5 Districts~~ General provisions) |
| Section 25-22 | (Requirements Where Individual Parking Facilities are Provided) |
| Section 25-23 | (Requirements Where Group Parking Facilities are Required) |

The regulations applicable to a #predominantly built-up area# shall not apply to any #zoning lot# occupied as of October 21, 1987, by a #single-# or #two-family detached# or #semi-detached residence# where 75 percent or more of the aggregate length of the #block# fronts in #residential use#, on both sides of the #street# facing each other, are occupied by such #residences# as of October 21, 1987. However, the regulations applicable to a #predominantly built-up area# may apply to such #zoning lots# where 75 percent or more of the aggregate length of the #block# fronts facing each other, on both sides of the #street#, is comprised of #zoning lots# occupied as of October 21, 1987, by #commercial# or #manufacturing uses#.

Furthermore, the regulations applicable to a #predominantly built-up area# shall continue to apply in the #Special

Coney Island Mixed Use District# and the #Special Ocean Parkway District#, and in areas subject to the provisions of paragraph (c) of Section 23-16 ~~23-146 (Optional provisions for certain R5 and R6 Districts in Brooklyn~~ Special Provisions for Certain Areas).

* * *

Quality Housing building

A "Quality Housing building" is a #building#, #developed#, #enlarged#, #extended# or #converted#, pursuant to the Quality Housing Program. The Quality Housing Program consists of specific #bulk# requirements set forth for #Quality Housing buildings# in Article II, Chapter 3 and Article III, Chapter 5. Where a #building# adheres to such #bulk# requirements, which, depending on the requirements for the zoning district, may be required or may be an option, additional standards and requirements are set forth in Article II, Chapter 8 that apply in conjunction with such #bulk# provisions for #Quality Housing buildings#.

* * *

Residence, or residential

A "residence" is one or more #dwelling units# or #rooming units#, including common spaces such as hallways, lobbies, stairways, laundry facilities, recreation areas or storage areas. A #residence# may, for example, consist of one-family or two-family houses, multiple dwellings, boarding or rooming houses, or #apartment hotels#. However, #residences# do not include:

(a) such transient accommodations as #transient hotels#, #motels# or #tourist cabins#, or #trailer camps#;

(b) #non-profit hospital staff dwellings#; or

(c) student dormitories, fraternity or sorority student houses, monasteries or convents, ~~sanitariums, nursing homes~~ #long-term care facilities#, or other living or sleeping accommodations in #community facility buildings# or portions of #buildings# used for #community facility uses#.

"Residential" means pertaining to a #residence#.

* * *

Transit Zone

The "Transit Zone" is the area within the boundaries shown in Appendix I where special parking provisions apply.

* * *

# Article I - General Provisions

**Chapter 3**
**Comprehensive Off-Street Parking and Loading Regulations in the Manhattan Core**

**13-00**
**GENERAL PURPOSES**

The provisions of this Chapter establish comprehensive regulations for off-street parking in the #Manhattan Core#, as defined in Section 12-10.

These regulations reflect best practices to address sustainability goals, while accommodating the parking needs of residents and businesses in a balanced manner.

*  *  *

**13-20**
**SPECIAL RULES FOR MANHATTAN CORE PARKING FACILITIES**

All #accessory# off-street parking facilities, automobile rental establishments, and #public parking lots developed#, #enlarged# or #extended# in the #Manhattan Core# after May 8, 2013, shall comply with the applicable provisions of this Section, inclusive.

*  *  *

**13-22**
**Applicability of Enclosure and Screening Requirements**

(a) Screening

In addition to the screening provisions of paragraph (a)(1) of Section 13-221 (Enclosure and screening requirements), the ground floor #use# provisions of the following Sections shall apply:

(1) Sections 32-431 (Ground floor use in C1-8A, C1-9A, C2-7A, C2-8A, C4-6A and C4-7A Districts) and 32-432 (Ground floor use in Community Board 7, Borough of Manhattan);

(2) ~~Section 37-35 (Retail Continuity)~~ Section 32-435 (Ground floor use in High Density Commercial Districts);

*  *  *

(b) Transparency

The transparency provisions of paragraph (a)(2) of Section 13-221 shall not apply to portions of ground floor level #street walls# that are subject to the following Sections:

(1) Section 32-435 (Ground floor use in High Density Commercial Districts) ~~37-37 (Street Wall Articulation)~~;

* * *

**13-221**
**Enclosure and screening requirements**

(a) #Accessory# off-street parking facilities

All #accessory# off-street parking spaces shall be located within a #completely enclosed building#, with the exception of parking spaces #accessory# to a hospital, as listed in Use Group 4, and as provided in Section 13-45 (Special Permits for Additional Parking Spaces). In addition, such parking facilities shall comply with the following provisions:

(1) Screening

Any portion of an #accessory# off-street parking facility~~, except for entrances and exits,~~ that is located above #curb level# shall comply with the applicable parking wrap and screening provisions set forth in Section 37-35. ~~be located behind permitted #commercial#, #community facility# or #residential floor area# so that no portion of such facility is visible from adjacent public sidewalks or #publicly accessible open areas#. Such #floor area# shall have a minimum dimension of 30 feet, as measured perpendicular to the #street wall# of the #building#.~~

~~Alternatively, for parking facilities, or portions thereof, fronting upon a #narrow street# within a #Residence District#, off-street parking facilities may be screened by a densely-planted buffer strip, with a depth of at least 10 feet.~~

(2) Transparency

Portions of ground floor #commercial# and #community facility uses# screening the parking facility in accordance with the provisions of paragraph (a) ~~(1) of this Section~~ of Section 37-35 shall be glazed with transparent materials in accordance with Section 37-34. ~~which may include #show windows#, transom windows or glazed portions of doors. Such transparent materials may be provided anywhere on the portion of the ground floor level #street wall# occupied by such #uses#, except that:~~

~~(i) the maximum width of a portion of the #ground floor level street wall# without transparency shall not exceed ten feet; and~~

~~(ii) transparent materials shall occupy at least 50 percent of the surface area of such ground floor level #street wall# between a height of two feet and 12 feet, or the height of the ground floor ceiling, whichever is higher, as measured from the adjoining sidewalk. Transparent materials provided to satisfy such 50 percent requirement shall not begin higher than 2 feet, 6 inches, above the level of the adjoining sidewalk, with the exception of transom windows, or portions of windows separated by mullions or other structural dividers; and shall have a minimum width of two feet.~~

However, for #buildings# where the #base flood elevation# is higher than the level of the adjoining sidewalk, all such transparency requirements shall be measured from ~~a height of one foot above the height of the #base flood elevation#~~ the level of the #flood-resistant construction elevation#, as defined in Section 64-11, instead of the level of the adjoining sidewalk.

* * *

# Article I - Residence District Regulations

**Chapter 5**
**Residential Conversion within Existing Buildings**

**15-00**
**GENERAL PURPOSES**

Special regulations for the conversion of non-residential floor area to residences have been established in order to promote and protect public health, safety and general welfare. These goals include, among others, the following specific purposes:

(a) to permit owners to increase the return on their investment in appropriate existing buildings by authorizing the conversion to residences without requiring such residences to conform to the provisions of Article II of this Resolution;

(b) to reduce the deleterious effects on commercial and manufacturing uses caused by the reduction of land and floor area available to such uses permitted under the provisions of this Chapter by providing relocation incentives for such uses;

(c) to protect important job-producing industries, particularly those with a unique social or economic relationship to the surrounding community;

(d) to provide sufficient space for commercial and manufacturing activities which are an integral part of New York City's economy;

(e) to provide for adequate returns to property owners by allowing more profitable residential use with a limited mix of commercial and manufacturing uses;

(f) to provide a new housing opportunity of a type and at a density appropriate to these Community Districts;

(g) to ensure the provision of safe and sanitary housing units in converted buildings; and

(h) to ensure the provision of adequate amenities in conjunction with residential development.

**15-01**
**Applicability**

* * *

**15-012**

**Applicability within C6-1G, C6-2G, M1-5A, M1-5B or M1-6D Districts**

#Conversions# in #buildings#, or portions thereof, in C6-1G or C6-2G Districts shall be permitted only by special permit pursuant to Section 74-782 (Residential conversion within C6-1G, C6-2G, C6-2M, C6-4M, M1-5A, M1-5B, M1-5M and M1-6M Districts).

Except as specifically set forth in Sections 15-013 and ~~15-026~~ 15-024, the provisions of this Chapter are not applicable in M1-5A or M1-5B Districts.

* * *

**15-02**
**General Provisions**

**15-021**
**Special use regulations**

* * *

(f) In C8 and M1 Districts, no new #dwelling units# are permitted. However, within such districts in the following areas:

* * *

Such a determination of #residential# occupancy on June 4, 1981 shall be deemed to permit #residential use# as-of-right for such #dwelling units#.

~~The provisions of Section 15-025 (Double glazed windows) shall not apply to #dwelling units# permitted pursuant to this paragraph (f). All #dwelling units# permitted pursuant to this paragraph (f) shall be required to have double glazed windows.~~

* * *

~~**15-024**~~
~~**Notice of filing to create dwelling units**~~

~~Within ten days of filing an application with the Department of Buildings for an alteration permit for #dwelling units#, a duplicate copy of such application shall be sent to the Department of City Planning by the applicant for information purposes.~~

~~**15-025**~~
~~**Double glazed windows**~~

~~All #dwelling units# in #buildings# which contain one or more #uses# listed in Section 15-60 (REFERENCED COMMERCIAL AND MANUFACTURING USES) and #converted# under the provisions of this Chapter shall be required to have double glazing on all windows. However, #dwelling units# occupied by #residential# tenants on September 1, 1980, in Manhattan Community Districts 1, 2, 3, 4, 5 and 6, or in Brooklyn Community Districts 1, 2, 6 and 8, and Queens Community Districts 1 and 2, shall not be required to have double glazed windows.~~

**15-024 ~~15-026~~**
**Special bulk regulations for certain pre-existing dwelling units, joint living-work quarters for artists and loft dwellings**

* * *

**15-10**
**REGULATIONS GOVERNING RESIDENTIAL CONVERSIONS WITHIN EXISTING BUILDINGS IN RESIDENTIAL AND COMMERCIAL DISTRICTS, EXCEPT C6-2M AND C6-4M DISTRICTS**

* * *

**15-111**
**Number of permitted dwelling units**

* * *

In addition, the following provisions shall apply:

* * *

The density provisions of this Section may be replaced by the regulations of Section ~~15-026~~ 15-024 for #dwelling units# that are registered Interim Multiple Dwellings or are covered by the New York City Loft Board pursuant to Article 7C of the New York State Multiple Dwelling Law or that the Loft Board determines were occupied for #residential use# on September 1, 1980.

* * *

**15-20**
**REGULATIONS GOVERNING RESIDENTIAL CONVERSIONS WITHIN EXISTING BUILDINGS IN C6-2M, C6-4M, M1-5M AND M1-6M DISTRICTS**

(a) The #lot area# requirements of the following Sections are hereby superseded and replaced with the requirements of Sections 15-21 and 15-22 for the #conversion# of non-#residential floor area# to #residences#:

Sections 23-20 through 23-26 (DENSITY REGULATIONS);

Section 24-20 (APPLICABILITY OF DENSITY REGULATIONS TO ZONING LOTS CONTAINING BOTH RESIDENTIAL AND COMMUNITY FACILITY USES));

Section 35-40 (APPLICABILITY OF DENSITY REGULATIONS ~~TO MIXED BUILDINGS~~); and

* * *

**15-40**
**AUTHORIZATION**

**15-41**
**Enlargements of Converted Buildings**

In all #Commercial# and #Residence Districts#, for #enlargements# of #buildings converted# to #residences#, the City Planning Commission may authorize:

(a) a waiver of the requirements of Section 15-12 (Open Space Equivalent) for the existing portion of the #building# #converted# to #residences#; and

(b) the maximum #floor area ratio# permitted pursuant to Section 23-151 ~~23-142~~ for the applicable district without regard for #height factor# or #open space ratio# requirements.

* * *

**15-50**
**SPECIAL PERMIT**

* * *

**15-60**
**REFERENCED COMMERCIAL AND MANUFACTURING USES**

The following #uses# shall be applicable to Sections 15-021~~, 15-025~~, 15-212 and 73-53.
In Use Group 7B:

* * *

# Article II - Residence District Regulations

**Chapter 2**
**Use Regulations**

*  *  *

**22-10**
**USES PERMITTED AS-OF-RIGHT**

*  *  *

**22-12**
**Use Group 2**

R3 R4 R5 R6 R7 R8 R9 R10

Use Group 2 consists of all other types of #residences#.

A. #Residential uses#

#Residences# of all kinds, including #apartment hotels# and ~~#non-profit residences for the elderly#~~ #affordable independent residences for seniors#, except that:

(1) in R3A, R3X, R4A and R5A Districts, #residential uses# shall be limited to #single-# or #two-family detached residences# except that in R3A Districts single- or two-family #zero lot line buildings# are also permitted;

(2) in R3-1 and R4-1 Districts, #residential uses# shall be limited to #single-# or #two-family residences detached# or #semi-detached# except that in R4-1 Districts single- or two-family #zero lot line buildings# are also permitted;

(3) in R4B Districts, #residential uses# shall be limited to #single-# or #two-family residences# in #detached#, #semi-detached#, #attached#, or #zero lot line buildings#.

#Residences# shall also include #rooming units# existing as of [date of adoption].

B. #Accessory uses#

*  *  *

**22-13**
**Use Group 3**

R1 R2 R3 R4 R5 R6 R7 R8 R9 R10

Use Group 3 consists of community facilities that:

(1) may appropriately be located in #residential# areas to serve educational needs or to provide other essential services for the residents; or

(2) can perform their activities more effectively in a #residential# environment, unaffected by objectionable influences from adjacent industrial or general service #uses#; and

(3) do not create significant objectionable influences in #residential# areas.

A. #Community facilities#

Colleges or universities[1], including professional schools but excluding business colleges or trade schools

College or school student dormitories and fraternity or sorority student houses[1]

~~Domiciliary care facilities for adults[2,3] under the jurisdiction of the New York State Board of Social Welfare which have secured certification by such agency~~

Libraries, museums or non-commercial art galleries

#Long-term care facilities#[2]

Monasteries, convents or novitiates, without restrictions as to use for living purposes or location in relation to other #uses#

#Non-profit hospital staff dwellings# located on the same #zoning lot# as the non-profit or voluntary hospital and related facilities or on a separate #zoning lot# that is immediately contiguous thereto or would be contiguous but for its separation by a #street# or a #street# intersection

~~Nursing homes and health-related facilities[3] as defined in Section 10 NYCRR 700.2(a) of the New York State Hospital Code, each of which have secured certification by the appropriate governmental agency. Nursing homes and health-related facilities are not permitted within the boundaries of any Community District in which one or more of the conditions set forth in Section 22-42 (Certification of Certain Community Facility Uses) applies except by special permit as set forth in Section 74-90~~

Philanthropic or non-profit institutions with sleeping accommodations[3]~~[4]~~

~~Sanitariums[3]~~

#Schools#

B. #Accessory uses#

_____

[1] Not permitted in R1 or R2 Districts as-of-right

[2] In R1 and R2 Districts, subject to the provisions of Section 22-42 (Long-Term Care Facilities).

~~[2] Permitted only by special permit by the City Planning Commission pursuant to Section 74-903~~

~~[3] Nursing homes, health related facilities, domiciliary care facilities for adults and sanitariums that are proprietary facilities are not permitted in R1 or R2 Districts~~

~~[4]~~[3] The number of persons employed in central office functions shall not exceed 50, and the amount of #floor area# used for such purposes shall not exceed 25 percent of the total #floor area#, or, in R8, R9 or R10 Districts, 25,000 square feet, whichever is greater

* * *

**22-14**
**Use Group 4**

R1 R2 R3 R4 R5 R6 R7 R8 R9 R10

Use Group 4 consists primarily of community facilities that:

(1) may appropriately be located in #residential# areas to provide recreational, religious, health and other essential services for the residents; or

(2) can perform their activities more effectively in a #residential# environment, unaffected by objectionable influences from adjacent medium and heavy industrial #uses#; and

(3) do not create significant objectionable influences in #residential# areas.

Those open #uses# of land which are compatible with a #residential# environment are also included.

A. #Community facilities#

* * *

B. Open #uses#

Agricultural #uses#, including greenhouses, nurseries, or truck gardens, provided that no offensive odors

or dust are created, and that there is no sale of products not produced on the same #zoning lot#

* * *

Railroad or transit rights-of-way[3]

* * *

---

[3] Use of #railroad or transit air space# is subject to the provisions of Section 22-41 (Air Space over a Railroad or Transit ~~Rights-of-Way~~ Right-of-way or Yard)

* * *

**22-20**
**USES PERMITTED BY SPECIAL PERMIT**

* * *

**22-22**
**By the City Planning Commission**

In the districts indicated, the following #uses# are permitted by special permit of the City Planning Commission, in accordance with standards set forth in Article VII, Chapter 4, or as otherwise indicated in this Section.

* * *

~~R1 R2 R3 R4 R5 R6 R7 R8 R9 R10~~
~~Domiciliary care facilities for adults~~

* * *

R1 R2
#Long-term care facilities#, except as provided in Section 22-42 (Long-Term Care Facilities).

* * *

~~R1 R2 R3 R4 R5 R6 R7 R8 R9 R10~~
~~Nursing home and health-related facilities in Community Districts in which the conditions set forth in Section 22-42 (Certification of Certain Community Facility Uses) apply. However, proprietary nursing homes, proprietary health-related facilities and proprietary domiciliary care facilities for adults are not permitted in R1 and R2 Districts and the special permit provisions shall not apply to such facilities~~

* * *

**22-40**

**SUPPLEMENTARY USE REGULATIONS**

*  *  *

**22-42**
**~~Certification of Certain Community Facility Uses~~**
**Long-Term Care Facilities**

~~R1 R2 R3 R4 R5 R6 R7 R8 R9 R10~~
R1 R2

~~In all #Residence Districts#, for any nursing homes and health-related facilities or #enlargement#, #extension# or change in #use# thereof, the City Planning Commission shall certify to the Department of Buildings, prior to the filing of any plans by the applicant for a building permit for such #use#, that none of the following conditions applies to the Community District within which such #use# or #enlargement#, #extension# or change in such #use# is to be located:~~

~~(a) the ratio between the number of beds for such #uses# in existence, under construction or approved toward construction by the appropriate Federal or State governmental agency, to the population of the Community District compared to such ratio for other Community Districts shows a relative concentration of facilities covered in this Section in the affected district; or~~

~~(b) a scarcity of land for general community purposes exists; or~~

~~(c) the incidence of construction of facilities for the last three years warrants review over these facilities because they threaten to disrupt the land use balance in the community.~~

~~If the Commission finds that one or more of the conditions set forth in this Section applies to the Community District within which such #use# or #enlargement#, #extension# or change in such #use# is to be located, a special permit pursuant to Section 74-90 shall be required.~~

In the districts indicated, on the same or contiguous #zoning lots#, or on lots that would be contiguous but for their separation by a #street#, with a #lot area# of at least ten acres, the City Planning Commission may authorize #long-term care facilities#, provided that the permitted #floor area ratio# for such #use# shall not exceed that permitted for #residential uses# under the applicable district regulations, and that no #building# on such #zoning lots# shall be located closer than 200 feet from the nearest #residence# on adjoining #zoning lots#.

In order to authorize such #long-term care facility#, the Commission shall find that:

(a) the proposed facility, including the scale and placement of #buildings#, will not impair the essential character of the surrounding area; and

(b) an adequate buffer exists between the proposed facility and nearby #residences#. In order to make such finding, the Commission shall consider proposed #building# access, orientation and landscaping.

The Commission may prescribe additional conditions and safeguards to minimize adverse effects on the character of the surrounding area.

On #zoning lots# with a #lot area# of less than ten acres, and on #zoning lots# with a #lot area# of more than ten acres that do not meet the conditions for the City Planning Commission authorization specified in this Section, #long-term care facilities# are subject to the City Planning Commission special permit provisions of Section 74-901 (Long-term care facilities in R1 and R2 districts and certain commercial districts).

*  *  *

# Article II - Residence District Regulations

**Chapter 3**
**Residential Bulk Regulations in Residence Districts**

**23-00**
**APPLICABILITY AND GENERAL PURPOSES**

**23-01**
**Applicability of ~~This~~ this Chapter**

The #bulk# regulations of this Chapter apply to any #zoning lot# or portion of a #zoning lot# located in any #Residence District# which contains any ~~#building or other structure#, other than a #community facility building# or the #community facility# portion of a #building#~~ #residential building or other structure#, or to the #residential# portion of a #building or other structure# used for both #residential and #community facility uses#. The #bulk# regulations of Article II, Chapter 4, shall apply to any #zoning lot# or portion of a #zoning lot# containing a #community facility building# or to the #community facility# portion of a #building# used for both #residential# and #community facility uses#, except as set forth in Section 24-012 (Exceptions to the bulk regulations of this Chapter). In addition, the #bulk# regulations of this Chapter, or of specified Sections thereof, also apply in other provisions of this Resolution where they are incorporated by cross reference.

Existing #buildings or other structures# that do not comply with one or more of the applicable #bulk# regulations are #non-complying buildings or other structures# and are subject to the regulations set forth in Article V, Chapter 4.

Special regulations applying to #large-scale residential developments# or #residential uses# in #large-scale community facility developments# are set forth in Article VII, Chapter 8.

Special regulations applying only in Special Purpose Districts are set forth in Articles VIII, IX, X, XI, XII and XIII.

In Manhattan Community Districts 1, 2, 3, 4, 5 and 6, Brooklyn Community Districts 1, 2, 6 and 8, and Queens Community Districts 1 and 2, the #conversion# of non-#residential floor area# to #residences# in #buildings# erected prior to December 15, 1961 or January 1, 1977, as applicable, shall be subject to the provisions of Article I ~~Article 1~~, Chapter 5 (Residential Conversion~~s~~ within Existing Buildings), unless such #conversions# meet the requirements for #residential developments# of Article II (Residence District Regulations).

Special regulations applying in the #waterfront area# are set forth in Article VI, Chapter 2.

Special regulations applying in the #flood zone# are set forth in Article VI, Chapter 4.

**23-011**
**Quality Housing Program**

R5D R6A R6B R7A R7B R7D R7X R8A R8B R8X R9A R9D R9X R10A R10X

(a) In R6A, R6B, R7A, R7B, R7D, R7X, R8A, R8B, R8X, R9A, R9D, R9X, R10A or R10X Districts, any #building or other structure# shall comply with the ~~applicable district~~ #bulk# regulations for #Quality Housing buildings# set forth in this Chapter and any #building# containing #residences# shall also comply with the requirements of Article II, Chapter 8 (Quality Housing Program). However, the provisions of Article II, Chapter 8, shall not apply to #buildings converted# pursuant to Article I, Chapter 5.

In R5D Districts, only certain requirements of Article II, Chapter 8, shall apply as set forth in Section 28-01 (Applicability of this Chapter).

R6 R7 R8 R9 R10

(b) In the districts indicated without a letter suffix, the #bulk# regulations applicable to #Quality Housing buildings# may, as an alternative, be applied to #zoning lots# where #buildings# are #developed# or #enlarged# pursuant to all of the requirements of the Quality Housing Program. Such #buildings# may be subsequently #enlarged# only pursuant to the Quality Housing Program. In these districts, the Quality Housing #bulk# regulations may apply to #developments# or #enlargements# on #zoning lots# with existing #buildings# to remain, if:

(1) the existing #buildings# contain no #residences# and the entire #zoning lot# will comply with the #floor area ratio# and density standards applicable to #Quality Housing buildings#; or

(2) the existing #buildings# contain #residences#, and:

(i) such #buildings# comply with the maximum base heights and maximum #building# heights listed in the tables in Sections 23-662 ~~23-633~~ ~~or 35-24~~for the applicable district, and the entire #zoning lot# will comply with the #floor area ratio#~~,~~ and #lot coverage# ~~and density~~ standards applicable to #Quality Housing buildings#~~.~~; or

(ii) for #developments# or #enlargements# on #zoning lots# providing either #affordable housing# pursuant to the Inclusionary Housing Program, as set forth in Section 23-90, inclusive, or #affordable independent residences for senior#, where at least 20 percent of the #floor area# of the #zoning lot# is allocated to such #use#:

a. the entire #zoning lot# will comply with the #floor area ratio# set forth in Section 23-154 (Inclusionary Housing) or Section 23-155 (Affordable independent residences for seniors), as applicable;

b. the entire #zoning lot# will comply with the #lot coverage# for the applicable zoning district set forth in Section 23-153 (For Quality Housing buildings); and either

c. the entire #zoning lot# will comply with the height and setback requirements of the applicable zoning district set forth in paragraph (a) of Section 23-664 (Modified height and setback requirements for certain buildings); or

d. in R6 through R8 districts, where the #zoning lot# is located within 150 feet of: an elevated rail line; open railroad right of way; a limited-access expressway, freeway, parkway, or highway, all of which prohibit direct vehicular access to abutting land; or an elevated #street# located on a bridge that prohibits direct vehicular access, the entire #zoning lot# will comply with the height and setback requirements of the applicable zoning district set forth in paragraph (b) of Section 23-664. Such 150 foot measurement shall be measured perpendicular from the edge of such infrastructure.

All #Quality Housing buildings# shall also comply with additional provisions set forth in Article II, Chapter 8.

R6 R7 R8 R9 R10

(c) In the districts indicated without a letter suffix, the optional Quality Housing #bulk# regulations permitted as an alternative pursuant to paragraph (b) of this Section, shall not apply to:

(1) Article VII, Chapter 8 (Large Scale Residential Developments);

(2) Special Purpose Districts.~~, except the following:~~

However, such optional Quality Housing #bulk# regulations are permitted as an alternative to apply in the following Special Purpose Districts:

#Special 125th Street District#;

#Special Downtown Brooklyn District#;

* * *

~~(3) #zoning lots# in R6 or R7 Districts within the study areas set forth in this paragraph, (c)(3), and occupied, as of August 14, 1987, by a #single-#, #two-# or three-#family detached# or #semi-detached residence# where 70 percent or more of the aggregate length of the #block# fronts in #residential use# on both sides of the #street# facing each other are occupied by such #residences#. For any #building# on such #zoning lot#, the #floor area ratio# and density requirements of the underlying district shall apply. On a #narrow street# that intersects with a~~

~~#wide street#, the 70 percent #residential use# requirement on a #narrow street# shall be measured from a distance of 100 feet from its intersection with a #wide street#.~~

~~The study areas are:~~

~~In the Borough of The Bronx:~~

~~Soundview Area~~

~~The area bounded by Story Avenue, the Bronx River, Westchester Avenue, Bronx River Avenue and Rosedale Avenue.~~

~~Castle Hill Area~~

~~The area bounded by Castle Hill Avenue, Westchester Avenue and East Tremont Avenue.~~

~~In the Borough of Brooklyn:~~

~~Midwood Area~~

~~The area bounded by Avenue M, Coney Island Avenue, Avenue O, and a line midway between East 10th Street and Coney Island Avenue.~~

~~Brighton Beach Area~~

~~The area bounded by Shore Parkway, NYCTA Brighton Right-of-Way, Brighton Beach Avenue and Ocean Parkway.~~

~~In the Borough of Queens:~~

~~Elmhurst/Corona Area~~

~~The area bounded by Roosevelt Avenue, 114th Street, 34th Avenue and 112th Street.~~

~~Forest Hills Area~~

~~The area bounded by Queens Boulevard, Union Turnpike, Austin Street and 76th Road.~~

~~Flushing Area~~

~~The area bounded by 35th Avenue, 149th Street, Northern Boulevard, 147th Street, Ash Avenue, Parsons Boulevard, Franklin Avenue, Bowne Avenue, Cherry Avenue, Kissena Boulevard, Elder Avenue, Main Street, Dahlia Avenue, Saull Street, Maple Avenue, Frame Place, 41st Avenue, College Point Boulevard, Roosevelt Avenue and Prince Street.~~

R6 R7 R8 R9 R10

(d) In the districts indicated, for #Quality Housing buildings#, the applicable #bulk# regulations of this Chapter may be modified for #zoning lots# with irregular site conditions or site planning constraints by special permit of the Board of Standards and Appeals, pursuant to Section 73-623 (Bulk modifications for Quality Housing buildings on irregular sites).

R6 R7 R8 R9 R10

(e) In the districts indicated, where a Special Purpose District modifies the #bulk# regulations for #Quality Housing buildings# set forth in this Chapter, the additional provisions for #Quality Housing buildings# set forth in Article II, Chapter 8 shall continue to apply. In addition, where any Special Purpose District that requires elements of Article II, Chapter 8 to apply to non- #Quality Housing buildings#, all associated #floor area# exemptions shall apply.

**23-012**
**Lower density growth management areas**

For areas designated as #lower density growth management areas# pursuant to Section 12-10 (DEFINITIONS), the underlying district regulations shall apply. Such regulations are superseded or supplemented as set forth in the following Sections:

| | |
|---|---|
| Section 11-45 | (Authorizations or Permits in Lower Density Growth Management Areas) |
| | * * * |
| Section 23-14 ~~23-141~~ | (~~Open space and floor area regulations in R1, R2, R3, R4 or R5 Districts~~ Open Space and Floor Area Regulations in R1 through R5 Districts) |
| Section 23-32 | (Minimum Lot Area or Lot Width for Residences) |
| | * * * |
| Section 23-462 | (Side yards for all other ~~residential~~ buildings containing residences) |
| Section 23-532 | (Required rear yard equivalents) |
| Section 23-63~~1~~ | (Height and setback in R1 through~~, R2, R3, R4 and~~ R5 Districts) |
| | * * * |

**23-10**

**OPEN SPACE AND FLOOR AREA REGULATIONS**

In all districts, as indicated, the #open space# and #floor area# for a #building or other structure# shall be as set forth in Section 23-10 (OPEN SPACE AND FLOOR AREA REGULATIONS), inclusive.

The regulations for permitted obstructions in required #open space# for all districts are set forth in Section 23-12. The regulations for balconies for all districts are set forth in Section 23-13.

#Open space# and #floor area# regulations applicable to R1 through R5 Districts are set forth in Section 23-14. #Open space# and #floor area# regulations applicable to R6 through R10 Districts are set forth in Section 23-15.

Special #open space# and #floor area# provisions are set forth in Sections 23-16 (Special Floor Area and Lot Coverage Provisions for Certain Areas) for tower-on-a-base #buildings# in R9 Districts, as well as for certain areas in Community District 7 and Community District 9 in the Borough of Manhattan, and Community District 12 in the Borough of Brooklyn. Additional provisions are set forth in Sections 23-17 (Existing Public Amenities for which Floor Area Bonuses Have Been Received) and 23-18 (Special Provisions for Zoning Lots Divided by District Boundaries or Subject to Different Bulk Regulations).

* * *

**23-14**

~~**Minimum Required Open Space, Open Space Ratio, Maximum Lot Coverage and Maximum Floor Area Ratio**~~
**Open Space and Floor Area Regulations in R1 through R5 Districts**

R1 R2 R3 R4 R5 ~~R6 R7 R8 R9 R10~~

In the districts indicated ~~In all districts, as indicated~~, ~~except as otherwise provided in Section 23-17 (Special Provisions for Zoning Lots Divided by District Boundaries),~~ for any #zoning lot#, the minimum required #open space# or #open space ratio# shall not be less than set forth in this Section, and the maximum #lot coverage# shall not exceed the #lot coverage# as set forth in this Section. Any given #lot area# or area of #open space# shall be counted only once in determining the #floor area ratio#, the amount of #open space# or the #open space ratio#.

In R1 and R2 Districts without a letter suffix, the #floor area# and #open space# provisions of Section 23-141 shall apply. In R1 and R2 Districts with a letter suffix, as well as R3, R4 and R5 Districts, the provisions of Section 23-142 shall apply.

In R4 and R5 Districts without a letter suffix, the provisions of Section 23-143 shall apply to #buildings# utilizing the optional provisions for a #predominantly built-up area#. In R3-2, R4 and R5 Districts without a letter suffix, the provisions of Section 23-144 shall apply to #buildings# providing #affordable independent residences for seniors#.

For #zoning lots# with #buildings# containing multiple #uses# or multiple #buildings# with different #uses#, the maximum #floor area ratio# for each #use# shall be as set forth in the applicable provisions of this Section,

inclusive, or Section 24-10 (FLOOR AREA AND LOT COVERAGE REGULATIONS), inclusive, provided the total of all such #floor area ratios# does not exceed the greatest #floor area ratio# permitted for any such #use# on the #zoning lot#. However, for #zoning lots# providing #affordable independent residences for seniors# and other #residential uses#, the sum of all #floor area# allocated to #uses# other than #affordable independent residences for seniors# on the #zoning lot# shall not exceed the maximum #floor area ratio# permitted for #residential uses# set forth in Sections 23-142 or 23-143, as applicable.

Where #floor area# in a #building# is shared by multiple #uses#, the #floor area# for such shared portion shall be proportionately attributed to such #uses#, based on the percentage each #use# occupies of the total #floor area# of the #zoning lot# less any shared #floor area#.

In addition to complying with the provisions of this Section, all #zoning lots# shall be subject to the provisions set forth in Section 23-22 (Maximum Number of Dwelling Units ~~or Rooming Units~~) as well as all other applicable #bulk# regulations as set forth in this Chapter.

**23-141**
**Open space and floor area regulations ~~in Rl, R2, R3, R4 or R5 Districts~~ in R1 and R2 Districts without a letter suffix**

R1 R2 ~~R3 R4 R5~~

In the districts indicated, except R1-2A, R2A and R2X Districts, the minimum required #open space ratio# shall be 150.0, and the maximum #floor area ratio# shall be 0.50.

~~Except as otherwise provided in paragraph (a) of Section 23-147 (For non-profit residences for the elderly), in the districts indicated, the minimum required #open space# or #open space ratio#, the maximum #lot coverage# and the maximum #floor area ratio# for any #zoning lot# shall be as set forth in the following tables:~~

~~(a)~~

| ~~District~~ | ~~Minimum Required #Open Space Ratio#~~ | ~~Maximum #Floor Area Ratio#~~ |
|---|---|---|
| ~~R1* R2*~~ | ~~150.0~~ | ~~0.50~~ |

~~* R1-2A, R2A and R2X are subject to the provisions of paragraph (b) of this Section~~

~~(b)~~

| District | Maximum #Lot Coverage# (in percent) | Minimum Required #Open Space# (in percent) | Maximum #Floor Area Ratio# |
|---|---|---|---|
| R1-2A | 30 | 70 | .50 |
| R2A | 30 | 70 | .50 |
| R2X | governed by #yard# requirements | | .85 |
| R3-1 R3-2 | 35 | 65 | .50 |
| R3A R3X | governed by #yard# requirements | | .50 |
| R4 | 45 | 55 | .75 |
| R4A R4-1 | governed by #yard# requirements | | .75 |
| R4B | 55 | 45 | .90 |
| R5 | 55 | 45 | 1.25 |
| R5A | governed by #yard# requirements | | 1.10 |
| R5B | 55 | 45 | 1.35 |
| R5D | 60* | 40* | 2.00 |

* For #corner lots#, the maximum #lot coverage# shall be 80 percent and the minimum required #open space# shall be 20 percent

In addition, the following rules shall apply:

(1) In R2X, R3, R4, R4A and R4-1 Districts, except R3, R4A and R4-1 Districts within #lower density growth management areas#, the #floor area ratio# in the table in this paragraph, (b), may be increased by up to 20 percent provided that any such increase in #floor area# is located directly under a sloping roof which rises at least three and one half inches in vertical distance for each foot of horizontal distance and the structural headroom of such #floor area# is between five and eight feet.

(2) In R3, R4A and R4-1 Districts in #lower density growth management areas#, the #floor area ratio# in the table in this Section may be increased by up to 20 percent provided that any such increase in #floor area# is located in any portion of a #building# covered by a sloping roof that rises at least seven inches in vertical distance for each foot of horizontal distance.

(3) In R3, R4 and R5 Districts, the permitted #floor area# of a #single-# or #two-family detached# or #semi-detached residence developed# after June 30, 1989, may be increased by up to 300 square feet if at least one enclosed #accessory# off-street parking space is provided in a garage located,

~~wholly or partly, in the #side lot ribbon# pursuant to Sections 23-12 (Permitted Obstructions in Open Space), paragraph (e), 23-441 (Location of garages in side yards of corner lots) or 23-442 (Location of garages in side yards of other zoning lots).~~

~~(4) In R1-2A Districts and in R3, R4A and R4-1 Districts within #lower density growth management areas#, the permitted #floor area# of a #single-# or #two-family detached# or #semi-detached residence# may be increased by up to 300 square feet for one parking space and up to 500 square feet for two parking spaces provided such spaces are in a garage located, wholly or partly, in the #side lot ribbon# pursuant to Sections 23-12, paragraph (e), 23-441 or 23-442, except that in R1-2A Districts, such parking spaces need not be located in the #side lot ribbon#.~~

~~(5) In R2A Districts, the permitted #floor area# may be increased by up to 300 square feet for a detached garage located in a #rear yard#, except where a parking space is provided within a #building# containing #residences#.~~

~~(c) The maximum #floor area ratio# and #lot coverage# and the minimum required #open space# for any #zoning lot# utilizing the special optional regulations of a #predominantly built-up area# are set forth in the following table:~~

| ~~District~~ | ~~Maximum #Lot Coverage# (in percent)~~ | ~~Minimum Required #Open Space# (in percent)~~ | ~~Maximum #Floor Area Ratio#~~ |
|---|---|---|---|
| ~~R4~~ | ~~55~~ | ~~45~~ | ~~1.35~~ |
| ~~R5~~ | ~~55~~ | ~~45~~ | ~~1.65~~ |

~~(d) In R3 Districts, except for #zoning lots# containing #single-#, #two-#, or three-#family residences#, 50 percent of the required #open space# on a #zoning lot#, except such #open space# in a #front yard#, shall have a minimum dimension of 12 feet and shall not be used for driveways, private streets, open or enclosed #accessory# off-street parking spaces or open or enclosed #accessory# off-street loading berths.~~

~~(e) In R4 and R5 Districts, except for #zoning lots# containing #single-#, #two-# or three-#family residences#, 33 percent of the required #open space# on a #zoning lot#, except such #open space# in a #front yard# or, in R5D Districts, open area between the #street line# and #street wall# of a #building# or its prolongation, shall have a minimum dimension of 12 feet and shall not be used for driveways, private streets, open or enclosed #accessory# off-street parking spaces, or open or enclosed #accessory# off-street loading berths.~~

**23-142**

**~~In R6, R7, R8 or R9 Districts~~**

**Open space and floor area regulations in R1 and R2 Districts with a letter suffix as well as R3 through R5 Districts**

~~R6 R7 R8 R9~~ R1 R2 R3 R4 R5

In the districts indicated, except R1 and R2 Districts without a letter suffix, the maximum #lot coverage#, minimum #open space# and maximum #floor area ratio# shall be as set forth in the following table:

| District | Maximum #Lot Coverage# (in percent) | Minimum Required #Open Space# (in percent) | Maximum #Floor Area Ratio# |
|---|---|---|---|
| R1-2A | 30 | 70 | .50 |
| R2A | 30 | 70 | .50 |
| R2X | Not applicable, governed by #yard# requirements | | .85 |
| R3-1 R3-2 | 35 | 65 | .50 |
| R3A R3X | Not applicable, governed by #yard# requirements | | .50 |
| R4 | 45 | 55 | .75 |
| R4A R4-1 | Not applicable, governed by #yard# requirements | | .75 |
| R4B | 55 | 45 | .90 |
| R5 | 55 | 45 | 1.25 |
| R5A | Not applicable, governed by #yard# requirements | | 1.10 |
| R5B | 55 | 45 | 1.35 |
| R5D | 60* | 40* | 2.00 |

* For #corner lots#, the maximum #lot coverage# shall be 80 percent and the minimum required #open space# shall be 20 percent

In addition, the following rules shall apply:

(a) In R2X, R3, R4, R4A and R4-1 Districts, except R3, R4A and R4-1 Districts within #lower density growth management areas#, the #floor area ratio# in the table in this Section, may be increased by up to 20 percent provided that any such increase in #floor area# is located directly under a sloping roof which

rises at least three and one half inches in vertical distance for each foot of horizontal distance and the structural headroom of such #floor area# is between five and eight feet.

(b) In R3, R4A and R4-1 Districts in #lower density growth management areas#, the #floor area ratio# in the table in this Section may be increased by up to 20 percent provided that any such increase in #floor area# is located in any portion of a #building# covered by a sloping roof that rises at least seven inches in vertical distance for each foot of horizontal distance.

(c) In R3, R4 and R5 Districts, the permitted #floor area# of a #single-# or #two-family detached# or #semi-detached residence developed# after June 30, 1989, may be increased by up to 300 square feet if at least one enclosed #accessory# off-street parking space is provided in a garage located, wholly or partly, in the #side lot ribbon# pursuant to Sections 23-12 (Permitted Obstructions in Open Space), paragraph (e), 23-441 (Location of garages in side yards of corner lots) or 23-442 (Location of garages in side yards of other zoning lots).

(d) In R1-2A Districts and in R3, R4A and R4-1 Districts within #lower density growth management areas#, the permitted #floor area# of a #single-# or #two-family detached# or #semi-detached residence# may be increased by up to 300 square feet for one parking space and up to 500 square feet for two parking spaces provided such spaces are in a garage located, wholly or partly, in the #side lot ribbon# pursuant to Sections 23-12, paragraph (e), 23-441 or 23-442, except that in R1-2A Districts, such parking spaces need not be located in the #side lot ribbon#.

(e) In R2A Districts, the permitted #floor area# may be increased by up to 300 square feet for a detached garage located in a #rear yard#, except where a parking space is provided within a #building# containing #residences#.

(f) In R3 Districts, except for #zoning lots# containing #single-#, #two-#, or three-#family residences#, 50 percent of the required #open space# on a #zoning lot#, except such #open space# in a #front yard#, shall have a minimum dimension of 12 feet and shall not be used for driveways, private streets, open or enclosed #accessory# off-street parking spaces or open or enclosed #accessory# off-street loading berths.

(g) In R4 and R5 Districts, except for #zoning lots# containing #single-#, #two-# or three-#family residences#, 33 percent of the required #open space# on a #zoning lot#, except such #open space# in a #front yard#, or in R5D Districts, the open area between the #street line# and #street wall# of a #building# or its prolongation, shall have a minimum dimension of 12 feet and shall not be used for driveways, private streets, open or enclosed #accessory# off-street parking spaces, or open or enclosed #accessory# off-street loading berths.

~~Except as otherwise provided in the following Sections:~~

~~Section 23-144 (In designated areas where the Inclusionary Housing Program is applicable)~~

~~Section 23-145 (For Quality Housing buildings)~~

~~Section 23-146 (Optional provisions for certain R5 and R6 Districts in Brooklyn)~~

~~Section 23-147 (For non-profit residences for the elderly);~~

~~Section 23-148 (For tower-on-a-base buildings in R9 Districts); and~~

~~Section 23-149 (Special floor area regulations for certain sites in Community District 9, Borough of Manhattan).~~

~~In the districts indicated, the minimum required #open space ratio# and the maximum #floor area ratio# for any #zoning lot# shall be as set forth in the following table for #zoning lots# with the #height factor# indicated in the table.~~

~~MINIMUM REQUIRED OPEN SPACE RATIO AND MAXIMUM FLOOR AREA RATIO~~

~~R6 through R9 Districts~~

| | ~~In R6 Districts~~ | | ~~In R7 Districts~~ | | ~~In R8 Districts~~ | | ~~In R9 Districts~~ | |
|---|---|---|---|---|---|---|---|---|
| ~~For #zoning lots# with a #height factor# of~~ | ~~Min. Req. #open space ratio#~~ | ~~Max. #floor area ratio#~~ | ~~Min. Req. #open space ratio#~~ | ~~Max. #floor area ratio#~~ | ~~Min. Req. #open space ratio#~~ | ~~Max. #floor area ratio#~~ | ~~Min. Req. #open space ratio#~~ | ~~Max. #floor area ratio#~~ |
| ~~1~~ | ~~27.5~~ | ~~0.78~~ | ~~15.5~~ | ~~0.87~~ | ~~5.9~~ | ~~0.94~~ | ~~1.0~~ | ~~0.99~~ |
| ~~2~~ | ~~28.0~~ | ~~1.28~~ | ~~16.0~~ | ~~1.52~~ | ~~6.2~~ | ~~1.78~~ | ~~1.4~~ | ~~1.95~~ |
| ~~3~~ | ~~28.5~~ | ~~1.62~~ | ~~16.5~~ | ~~2.01~~ | ~~6.5~~ | ~~2.51~~ | ~~1.8~~ | ~~2.85~~ |
| ~~4~~ | ~~29.0~~ | ~~1.85~~ | ~~17.0~~ | ~~2.38~~ | ~~6.8~~ | ~~3.14~~ | ~~2.2~~ | ~~3.68~~ |
| ~~5~~ | ~~29.5~~ | ~~2.02~~ | ~~17.5~~ | ~~2.67~~ | ~~7.1~~ | ~~3.69~~ | ~~2.6~~ | ~~4.42~~ |
| ~~6~~ | ~~30.0~~ | ~~2.14~~ | ~~18.0~~ | ~~2.88~~ | ~~7.4~~ | ~~4.15~~ | ~~3.0~~ | ~~5.08~~ |
| ~~7~~ | ~~30.5~~ | ~~2.23~~ | ~~18.5~~ | ~~3.05~~ | ~~7.7~~ | ~~4.55~~ | ~~3.4~~ | ~~5.65~~ |
| ~~8~~ | ~~31.0~~ | ~~2.30~~ | ~~19.0~~ | ~~3.17~~ | ~~8.0~~ | ~~4.88~~ | ~~3.8~~ | ~~6.13~~ |

| | | | | | | | | |
|---|---|---|---|---|---|---|---|---|
| ~~9~~ | ~~31.5~~ | ~~2.35~~ | ~~19.5~~ | ~~3.27~~ | ~~8.3~~ | ~~5.15~~ | ~~4.2~~ | ~~6.54~~ |
| ~~10~~ | ~~32.0~~ | ~~2.38~~ | ~~20.0~~ | ~~3.33~~ | ~~8.6~~ | ~~5.38~~ | ~~4.6~~ | ~~6.85~~ |
| ~~11~~ | ~~32.5~~ | ~~2.40~~ | ~~20.5~~ | ~~3.38~~ | ~~8.9~~ | ~~5.56~~ | ~~5.0~~ | ~~7.09~~ |
| ~~12~~ | ~~33.0~~ | ~~2.42~~ | ~~21.0~~ | ~~3.41~~ | ~~9.2~~ | ~~5.71~~ | ~~5.4~~ | ~~7.30~~ |
| ~~13~~ | ~~33.5~~ | ~~2.43~~ | ~~21.5~~ | ~~3.42~~ | ~~9.5~~ | ~~5.81~~ | ~~5.8~~ | ~~7.41~~ |
| ~~14~~ | ~~34.0~~ | ~~2.43~~ | ~~22.0~~ | ~~3.44~~ | ~~9.8~~ | ~~5.92~~ | ~~6.2~~ | ~~7.52~~ |
| ~~15~~ | ~~34.5~~ | ~~2.43~~ | ~~22.5~~ | ~~3.42~~ | ~~10.1~~ | ~~5.95~~ | ~~6.6~~ | ~~7.52~~ |
| ~~16~~ | ~~35.0~~ | ~~2.42~~ | ~~23.0~~ | ~~3.41~~ | ~~10.4~~ | ~~5.99~~ | ~~7.0~~ | ~~7.52~~ |
| ~~17~~ | ~~35.5~~ | ~~2.42~~ | ~~23.5~~ | ~~3.40~~ | ~~10.7~~ | ~~6.02~~ | ~~7.4~~ | ~~7.52~~ |
| ~~18~~ | ~~36.0~~ | ~~2.40~~ | ~~24.0~~ | ~~3.38~~ | ~~11.0~~ | ~~6.02~~ | ~~7.8~~ | ~~7.46~~ |
| ~~19~~ | ~~36.5~~ | ~~2.39~~ | ~~24.5~~ | ~~3.36~~ | ~~11.3~~ | ~~6.02~~ | ~~8.2~~ | ~~7.41~~ |
| ~~20~~ | ~~37.0~~ | ~~2.38~~ | ~~25.0~~ | ~~3.33~~ | ~~11.6~~ | ~~6.02~~ | ~~8.6~~ | ~~7.35~~ |
| ~~21~~ | ~~37.5~~ | ~~2.36~~ | ~~25.5~~ | ~~3.30~~ | ~~11.9~~ | ~~5.99~~ | ~~9.0~~ | ~~7.25~~ |

**23-143**
**~~For high buildings in R6, R7, R8 or R9 Districts~~**
**Optional regulations for predominantly built-up areas**

~~R6 R7 R8 R9~~
R4 R5

In the districts indicated without a letter suffix, the maximum #floor area ratio# and #lot coverage# and the minimum required #open space# for any #zoning lot# utilizing the special optional regulations of a #predominantly built-up area# are set forth in the following table:

| | Maximum #Lot Coverage# | Minimum Required #Open Space# | Maximum #Floor Area Ratio# |
|---|---|---|---|

| District | (in percent) | (in percent) | |
|---|---|---|---|
| R4 | 55 | 45 | 1.35 |
| R5 | 55 | 45 | 1.65 |

~~Except as otherwise provided in paragraph (a) of Section 23-147 (For non-profit residences for the elderly), in the districts indicated, for #zoning lots# with #height factors# greater than 21, the minimum required #open space ratio# shall be as set forth in the following table:~~

~~OPEN SPACE RATIO FOR HIGH BUILDINGS~~

| ~~District~~ | ~~Minimum Required #Open Space Ratio# at #Height Factor# of 21~~ | ~~Additional Required #Open Space Ratio# for each Additional #Height Factor#~~ |
|---|---|---|
| ~~R6~~ | ~~37.5~~ | ~~0.5~~ |
| ~~R7~~ | ~~25.5~~ | ~~0.5~~ |
| ~~R8~~ | ~~11.9~~ | ~~0.3~~ |
| ~~R9~~ | ~~9.0~~ | ~~0.4~~ |

~~For such #zoning lots#, the maximum #floor area ratio# shall be such as can be attained at the required #open space ratio# for the #height factor#.*~~

~~* The #floor area ratio# attainable at a given #height factor# and a given #open space ratio# may be computed from the following formula:~~

$$\cancel{\frac{1}{F.A.R.} = \frac{O.S.R.}{100} + \frac{1}{H.F.}}$$

**23-144**

**~~In designated areas where the Inclusionary Housing Program is applicable~~**

**Affordable independent residences for seniors**

R3-2 R4 R5

In the districts indicated, except R4A, R4B, R4-1, R5A, R5B and R5D Districts, the maximum #floor area ratio# for #affordable independent residences for seniors# shall be as set forth in the following table. #Open space# and #lot coverage# shall be governed by the #yard# requirements of the applicable district.

In R5D Districts, the #open space# and #floor area# regulations set forth in Section 23-142 (Open space and floor area regulations in other R1 and R2 Districts and R3 through R5 Districts) shall apply to #affordable independent residences for seniors#.

MAXIMUM FLOOR AREA RATIO FOR
AFFORDABLE INDEPENDENT RESIDENCES FOR SENIORS
IN R3-2, R4 AND R5 DISTRICTS

| Districts | Maximum #Floor Area Ratio# |
|---|---|
| R3-2 | 0.95 |
| R4 | 1.29 |
| R5 | 1.95 |

~~In #Inclusionary Housing designated areas#, the maximum permitted #floor area ratios# shall be as set forth in Section 23-952 (Floor area compensation in Inclusionary Housing designated areas). The locations of such areas are specified in APPENDIX F (Inclusionary Housing Designated Areas) of this Resolution.~~

~~**23-145**~~
~~**For Quality Housing buildings**~~

~~R6 R7 R8 R9 R10~~

~~In the districts indicated, the maximum #residential lot coverage# and the maximum #floor area ratio# for a #zoning lot# where #Quality Housing buildings# are #developed# or #enlarged# shall be as set forth in the following table. The maximums for #zoning lots#, or portions thereof, located within 100 feet of a #wide street# in R6, R7 or R8 Districts without a letter suffix outside the #Manhattan Core#, shall be as designated by the same district with an asterisk. In an R6 District inside the #Manhattan Core# located within 100 feet of a #wide street#, the maximums shall be indicated by the same district with a double asterisk.~~

~~MAXIMUM LOT COVERAGE AND FLOOR AREA RATIO~~
~~FOR~~
~~QUALITY HOUSING BUILDINGS~~
~~(in percent)~~

| | ~~Maximum #Lot Coverage#~~ | | |
|---|---|---|---|
| ~~District~~ | ~~#Corner Lot#~~ | ~~#Interior Lot# or #Through Lot#~~ | ~~Maximum #Floor Area Ratio#~~ |
| ~~R6~~ | ~~80~~ | ~~60~~ | ~~2.20~~ |
| ~~R6**~~ | ~~80~~ | ~~60~~ | ~~2.43~~ |
| ~~R6* R6A R7B~~ | ~~80~~ | ~~65~~ | ~~3.00~~ |
| ~~R6B~~ | ~~80~~ | ~~60~~ | ~~2.00~~ |
| ~~R7~~ | ~~80~~ | ~~65~~ | ~~3.44~~ |
| ~~R7* R7A~~ | ~~80~~ | ~~65~~ | ~~4.00~~ |
| ~~R7D~~ | ~~80~~ | ~~65~~ | ~~4.20~~ |
| ~~R7X~~ | ~~80~~ | ~~70~~ | ~~5.00~~ |
| ~~R8 R8A R8X~~ | ~~80~~ | ~~70~~ | ~~6.02~~ |
| ~~R8*~~ | ~~80~~ | ~~70~~ | ~~7.20~~ |
| ~~R8B~~ | ~~80~~ | ~~70~~ | ~~4.00~~ |
| ~~R9 R9A~~ | ~~80~~ | ~~70~~ | ~~7.52~~ |
| ~~R9D R9X~~ | ~~80~~ | ~~70~~ | ~~9.00~~ |
| ~~R10~~ | ~~100~~ | ~~70~~ | ~~10.00~~ |

**~~23-146~~**
**~~Optional provisions for certain R5 and R6 Districts in Brooklyn~~**

~~R5 R6~~

~~Within the area bounded by 39th Street, Dahill Road, Ditmas Avenue, McDonald Avenue, Bay Parkway, 61st Street and Fort Hamilton Parkway in Community Board 12, in the Borough of Brooklyn, special optional regulations as set forth in this Section are applicable for #zoning lots# containing #buildings# used exclusively as~~

~~one -, #two-# or three-#family residences#, provided such #zoning lot# complies with all of the provisions of this Section. Except as modified by the express provisions of this Section, the regulations of R5 and R6 Districts remain in effect.~~

~~(a) #Floor area#, #lot coverage#, #open space#, density and #height factor# regulations~~

~~The regulations of Article II, Chapter 3, relating to #floor area ratio#, #open space#, density and #height factor# are hereby made inapplicable. In lieu thereof, the maximum #floor area ratio# for a #corner lot# shall not exceed 1.65 and the maximum #floor area ratio# for an #interior# or #through lot# shall not exceed 1.8 in R5 Districts and 1.95 in R6 Districts. Notwithstanding the definition of #floor area# in Section 12-10, the lowest #story# shall be included in the definition of #floor area#, and floor space used for #accessory# off-street parking spaces shall be included in the definition of #floor area# unless such spaces are located in a #cellar#. The #lot coverage# for a #corner lot# shall not exceed 55 percent and the #lot coverage# for an #interior# or #through lot# shall not exceed 60 percent in R5 Districts and 65 percent in R6 Districts.~~

~~(b) #Building# height~~

~~No #building# shall exceed a height of 35 feet above #curb level#, or three #stories#, whichever is less. The regulations of Article II, Chapter 3, relating to height and setback, are hereby made inapplicable.~~

~~(c) #Front yards#~~

~~In R5 Districts, the following #front yard# regulations are applicable. A #front yard# shall be provided with a depth of not less than five feet, provided that for #corner lots#, one #front yard# with a depth of not less than 10 feet is required. If the depth of the #front yard# exceeds 10 feet, such #front yard# shall have a depth of not less than 18 feet. In R6 Districts, a #front yard# is not required.~~

~~(d) #Side yards#~~

~~In R5 Districts, the following #side yard# regulations shall apply:~~

~~(1) Where an existing #building# on an adjacent #zoning lot# is located on the common #side lot line#, no #side yard# is required. However, if an open area extending along such common #side lot line# is provided, it shall be at least eight feet wide.~~

~~(2) Where an existing #building# on an adjacent #zoning lot# is located less than eight feet from, but not on, the common #side lot line#, a #side yard# at least four feet wide is required. However, in no case shall the distance between a new or #enlarged building# and an existing #building# across a common #side lot line# on an adjacent #zoning lot# be less than eight feet.~~

~~(3) Where an adjacent #zoning lot# is vacant or where an existing #building# on an adjacent #zoning lot# is located more than eight feet from the common #side lot line#, a #side yard# at least four feet wide is required.~~

~~(4) In R6 Districts, a #side yard# is not required. However, when a #building# is 62 feet in depth or more, an eight foot #side yard# or an #outer court# as set forth in paragraph (f) of this Section is required.~~

~~(5) Notwithstanding the provisions of paragraphs (d)(1) and (d)(3), #detached# one-, #two-# and three-#family residences# on #corner lots# shall provide #side yards# of five feet and 20 feet. #Semi-detached# one-, #two-# and three-#family residences# on #corner lots# shall provide one #side yard# of 20 feet.~~

~~(e) #Rear yards#~~

~~#Single-# or #two-family residences# consisting of #detached#, #semi-detached# or #zero lot line buildings# may project up to ten feet into a required #rear yard# or #rear yard equivalent#, provided that there is a #side yard# of at least eight feet for such #semi-detached# or #zero lot line buildings#, and that the total width of #side yards# for a #detached building# is at least eight feet.~~

~~(f) #Outer court# and minimum distance between #legally required windows# and walls or #lot lines#~~

~~In R6 Districts, the #outer court# provisions of Section 23-84 are modified as follows: an #outer court# shall have a minimum width of 10 feet and a depth of not more than twice the width.~~

~~Where a #building# is attached, along a common #side lot line#, to a portion of an existing or new #building# on an adjacent #zoning lot#, there may be a joint #outer court# across such common #side lot line# with a minimum width of 10 feet. The requirements of Section 23-86 are hereby made inapplicable.~~

~~(g) Off-street parking in R5 and R6 Districts~~

~~No #accessory# off-street parking is required in R5 and R6 Districts.~~

~~**23-147**~~
~~**For non-profit residences for the elderly**~~

~~R3-R4-R5-R6-R7~~

~~(a) In the districts indicated, except R5D Districts, the minimum required #open space ratio# and the maximum #floor area ratio# for #non-profit residences for the elderly# shall be as set forth in the following table:~~

| ~~Maximum #Floor Area Ratio#~~ | ~~Minimum #Open Space Ratio#~~ | ~~Districts~~ |
|---|---|---|

| | | |
|---|---|---|
| ~~0.95~~ | ~~66.5~~ | ~~R3~~ |
| ~~1.29~~ | ~~39.4~~ | ~~R4~~ |
| ~~1.95~~ | ~~23.1~~ | ~~R5~~ |
| ~~3.90~~ | ~~17.7~~ | ~~R6~~ |
| ~~5.01~~ | ~~12.8~~ | ~~R7~~ |

~~In R5D Districts, the #open space# and #floor area# regulations set forth in Section 23-141 shall apply to #non-profit residences for the elderly#.~~

~~However, in R6 or R7 Districts, the minimum required #open space ratio# shall not apply to #non-profit residences for the elderly# that are #Quality Housing buildings#. Such #buildings# shall be subject to the requirements of R6A or R7A Districts, respectively, as set forth in paragraph (b) of this Section.~~

~~R6A R6B R7A R7B R7D R7X~~

~~(b) In the districts indicated, the maximum #lot coverage# and the maximum #floor area ratio# for #non-profit residences for the elderly# shall be as set forth in the following table:~~

~~MAXIMUM LOT COVERAGE AND FLOOR AREA RATIO~~
~~FOR~~
~~NON-PROFIT RESIDENCES FOR THE ELDERLY~~
~~(in percent)~~

| ~~Maximum #Lot Coverage#~~ | | | |
|---|---|---|---|
| ~~#Corner Lot#~~ | ~~#Interior Lot# or #Through Lot#~~ | ~~Maximum #Floor Area Ratio#~~ | ~~District~~ |
| ~~80~~ | ~~65~~ | ~~3.90~~ | ~~R6A R7B~~ |
| ~~80~~ | ~~60~~ | ~~2.00~~ | ~~R6B~~ |
| ~~80~~ | ~~70~~ | ~~5.01~~ | ~~R7A R7D R7X~~ |

**~~23-148~~**
**~~For tower-on-a-base buildings in R9 Districts~~**

~~In R9 Districts, for #zoning lots# where #buildings# are #developed# or #enlarged# pursuant to the tower-on-a-base provisions of Section 23-651, the maximum #floor area ratio# shall be 7.52, and the maximum #lot coverage# shall be 80 percent on a #corner lot# and 70 percent on an #interior lot#.~~

**~~23-149~~**
**~~Special floor area regulations for certain sites in Community District 9, Borough of Manhattan~~**

~~Within the boundaries of Community District 9 in the Borough of Manhattan, all #buildings# located in R8 Districts north of West 125th Street shall be #developed# or #enlarged# pursuant to the Quality Housing Program and are subject to the #floor area# regulations set forth in Section 23-145 (For Quality Housing buildings).~~

**23-15**
**~~Maximum Floor Area Ratio in R10 Districts~~**
**Open Space and Floor Area Regulations in R6 through R10 Districts**
~~R10~~
R6 R7 R8 R9 R10

In the districts indicated, for any #zoning lot#, the minimum required #open space# or #open space ratio# shall not be less than set forth in this Section, and the maximum #lot coverage# shall not exceed the #lot coverage# as set forth in this Section. Any given #lot area# or area of #open space# shall be counted only once in determining the #floor area ratio#, the amount of #open space# or the #open space ratio#.

In R6A, R6B, R7A, R7B, R7D, R7X, R8A, R8B, R8X, R9A, R9D, R9X, R10A or R10X Districts, any #building# shall comply with the #floor area ratio# and #lot coverage# regulations for #Quality Housing buildings# set forth in Sections 23-153 (For Quality Housing buildings).

In R6, R7, R8, R9 and R10 Districts without a letter suffix, #buildings# containing #residences# may be #developed# or #enlarged# pursuant to the basic #floor area# and #open space# regulations set forth in Section 23-151 (Basic regulations for R6 though R9 Districts) or 23-152 (Basic regulations for R10 Districts), as applicable, or the regulations for #Quality Housing buildings# set forth in Section 23-153.

All #Quality Housing buildings# shall also comply with additional provisions set forth in Article II, Chapter 8.

The applicable #floor area ratio# for the district may be increased for #developments# or #enlargements# providing #affordable housing# or #affordable independent residences for seniors#, pursuant to Sections 23-154 (Inclusionary Housing) or 23-155 (Affordable independent residences for seniors), as applicable.

Special #lot coverage# provisions for shallow #zoning lots#, and #interior# or #through lots# within one hundred feet of corners or located along the short dimension of the #block# are set forth in Sections 23-156 (Special lot coverage provisions for certain interior lots).

For #zoning lots# with #buildings# containing multiple #uses# or multiple #buildings# with different #uses#, the maximum #floor area ratio# for each #use# shall be as set forth in the applicable provisions of this Section,

inclusive, or Section 24-10 (FLOOR AREA AND LOT COVERAGE REGULATIONS), inclusive, provided the total of all such #floor area ratios# does not exceed the greatest #floor area ratio# permitted for any such #use# on the #zoning lot#.

However, for #zoning lots# providing #affordable independent residences for seniors# and other #residential uses#, the total #floor area# allocated to #uses# other than #affordable independent residences for seniors# on the #zoning lot# shall not exceed the maximum #floor area ratio# permitted for #residential uses# set forth in Sections 23-151, or 23-153, as applicable. Furthermore, for such #zoning lots# providing #affordable independent residences for seniors# and other #residential uses# within R10 Districts or within Inclusionary Housing Designated Areas, the maximum #floor area ratio# on the #zoning lot# shall not exceed the #floor area ratio# for the Inclusionary Housing Program set forth in Section 23-154, as applicable, and the maximum #floor area ratio# allocated to #affordable independent residences for seniors# shall not exceed the base #floor area ratio# specified in such Section, as applicable, except where such #affordable independent residences for seniors# meet the definition of #affordable housing# set forth in Section 23-911. #Zoning lots# with #buildings# used exclusively for #affordable independent residences for seniors# within R10 Districts or within Inclusionary Housing Designated Areas shall remain subject to the maximum #floor are ratios# set forth in 23-155.

Where #floor area# in a #building# is shared by multiple #uses#, the #floor area# for such shared portion shall be attributed to each #use# proportionately, based on the percentage each #use# occupies of the total #floor area# of the #zoning lot# less any shared #floor area#.

In addition to complying with the provisions of this Section, all #zoning lots# shall be subject to the provisions set forth in Section 23-22 (Maximum Number of Dwelling Units) as well as all other applicable #bulk# regulations as set forth in this Chapter.

~~In the district indicated, except in #Inclusionary Housing designated areas#, the #floor area ratio# on a #zoning lot# shall not exceed 10.0, except as provided in Section 23-17 (Special Provisions for Zoning Lots Divided By District Boundaries) and Section 23-90 (INCLUSIONARY HOUSING), inclusive.~~

~~Notwithstanding any other provision of this Resolution, the maximum #floor area ratio# shall not exceed 12.0. However, within the boundaries of Community District 7 in the Borough of Manhattan, in R10 Districts, except R10A or R10X Districts, the maximum #floor area ratio# shall 10.0.~~

**23-151**
**Basic regulations for R6 through R9 Districts**
R6 R7 R8 R9

In the districts indicated without a letter suffix, the minimum required #open space ratio# and the maximum #floor area ratio# for any #zoning lot# shall be determined by the #height factor# of such #zoning lot# as set forth in this Section.

MINIMUM REQUIRED OPEN SPACE RATIO

AND MAXIMUM FLOOR AREA RATIO

R6 through R9 Districts

| | In R6 Districts | | In R7 Districts | | In R8 Districts | | In R9 Districts | |
|---|---|---|---|---|---|---|---|---|
| For #zoning lots# with a #height factor# of | Min. Req. #open space ratio# | Max. #floor area ratio# | Min. Req. #open space ratio# | Max. #floor area ratio# | Min. Req. #open space ratio# | Max. #floor area ratio# | Min. Req. #open space ratio# | Max. #floor area ratio# |
| 1 | 27.5 | 0.78 | 15.5 | 0.87 | 5.9 | 0.94 | 1.0 | 0.99 |
| 2 | 28.0 | 1.28 | 16.0 | 1.52 | 6.2 | 1.78 | 1.4 | 1.95 |
| 3 | 28.5 | 1.62 | 16.5 | 2.01 | 6.5 | 2.51 | 1.8 | 2.85 |
| 4 | 29.0 | 1.85 | 17.0 | 2.38 | 6.8 | 3.14 | 2.2 | 3.68 |
| 5 | 29.5 | 2.02 | 17.5 | 2.67 | 7.1 | 3.69 | 2.6 | 4.42 |
| 6 | 30.0 | 2.14 | 18.0 | 2.88 | 7.4 | 4.15 | 3.0 | 5.08 |
| 7 | 30.5 | 2.23 | 18.5 | 3.05 | 7.7 | 4.55 | 3.4 | 5.65 |
| 8 | 31.0 | 2.30 | 19.0 | 3.17 | 8.0 | 4.88 | 3.8 | 6.13 |
| 9 | 31.5 | 2.35 | 19.5 | 3.27 | 8.3 | 5.15 | 4.2 | 6.54 |
| 10 | 32.0 | 2.38 | 20.0 | 3.33 | 8.6 | 5.38 | 4.6 | 6.85 |
| 11 | 32.5 | 2.40 | 20.5 | 3.38 | 8.9 | 5.56 | 5.0 | 7.09 |
| 12 | 33.0 | 2.42 | 21.0 | 3.41 | 9.2 | 5.71 | 5.4 | 7.30 |
| 13 | 33.5 | 2.43 | 21.5 | 3.42 | 9.5 | 5.81 | 5.8 | 7.41 |
| 14 | 34.0 | 2.43 | 22.0 | 3.44 | 9.8 | 5.92 | 6.2 | 7.52 |

| | | | | | | | | |
|---|---|---|---|---|---|---|---|---|
| 15 | 34.5 | 2.43 | 22.5 | 3.42 | 10.1 | 5.95 | 6.6 | 7.52 |
| 16 | 35.0 | 2.42 | 23.0 | 3.41 | 10.4 | 5.99 | 7.0 | 7.52 |
| 17 | 35.5 | 2.42 | 23.5 | 3.40 | 10.7 | 6.02 | 7.4 | 7.52 |
| 18 | 36.0 | 2.40 | 24.0 | 3.38 | 11.0 | 6.02 | 7.8 | 7.46 |
| 19 | 36.5 | 2.39 | 24.5 | 3.36 | 11.3 | 6.02 | 8.2 | 7.41 |
| 20 | 37.0 | 2.38 | 25.0 | 3.33 | 11.6 | 6.02 | 8.6 | 7.35 |
| 21 | 37.5 | 2.36 | 25.5 | 3.30 | 11.9 | 5.99 | 9.0 | 7.25 |

For #zoning lots# with #height factors# greater than 21, the minimum required #open space ratio# shall be as set forth in the following table:

OPEN SPACE RATIO FOR HIGH BUILDINGS

| District | Minimum Required #Open Space Ratio# at #Height Factor# of 21 | Additional Required #Open Space Ratio# for each Additional #Height Factor# |
|---|---|---|
| R6 | 37.5 | 0.5 |
| R7 | 25.5 | 0.5 |
| R8 | 11.9 | 0.3 |
| R9 | 9.0 | 0.4 |

For such #zoning lots#, the maximum #floor area ratio# shall be such as can be attained at the required #open space ratio# for the #height factor#.*

* The #floor area ratio# attainable at a given #height factor# and a given #open space ratio# may be computed from the following formula:

$$\frac{1}{F.A.R.} = \frac{O.S.R.}{100} + \frac{1}{H.F.}$$

**23-152**
**Basic regulations for R10 Districts**

In R10 Districts, the #floor area ratio# on a #zoning lot# shall not exceed 10.0.

Notwithstanding any other provision of this Resolution, the maximum #floor area ratio# shall not exceed 12.0.

**23-153**
**For Quality Housing buildings**
R6 R7 R8 R9 R10

In the districts indicated, for #developments# and #enlargements# of #Quality Housing buildings#, the maximum #floor area ratio# and maximum #residential lot coverage# for #interior lots# or #through lots# shall be as set forth in the following table. The maximum #residential lot coverage# for a #corner lot# shall be 100 percent.

The maximums for #zoning lots#, or portions thereof, located within 100 feet of a #wide street# in R6, R7 or R8 Districts without a letter suffix outside the #Manhattan Core#, shall be as designated by the same district with an asterisk. In an R6 District inside the #Manhattan Core# located within 100 feet of a #wide street#, the maximums shall be indicated by the same district with a double asterisk.

MAXIMUM LOT COVERAGE AND FLOOR AREA RATIO
FOR QUALITY HOUSING BUILDINGS
(in percent)

| District | Maximum #Lot Coverage# for an #Interior Lot# or #Through Lot# | Maximum #Floor Area Ratio# |
|---|---|---|
| R6 | 60 | 2.20 |
| R6** | 60 | 2.43 |
| R6* R6A R7B | 65 | 3.00 |
| R6B | 60 | 2.00 |
| R7 | 65 | 3.44 |

| | | |
|---|---|---|
| R7* R7A | 65 | 4.00 |
| R7D | 65 | 4.20 |
| R7X | 70 | 5.00 |
| R8 R8A R8X | 70 | 6.02 |
| R8* | 70 | 7.20 |
| R8B | 70 | 4.00 |
| R9 R9A | 70 | 7.52 |
| R9D R9X | 70 | 9.00 |
| R10 | 70 | 10.00 |

**23-154**
**Inclusionary Housing**

For #developments# or #enlargements# providing #affordable housing# pursuant to the Inclusionary Housing Program, as set forth in Section 23-90, inclusive, the maximum #floor area ratio# permitted in R10 Districts outside of #Inclusionary Housing designated areas# shall be as set forth in paragraph (a) of this Section, and the maximum #floor area ratio# in the #Inclusionary Housing designated areas# existing on (date of adoption) shall be as set forth in paragraph (b) of this Section. Special provisions for certain areas are set forth in paragraph (c) of this Section. The maximum #lot coverage# shall be as set forth in Section 23-153 (For Quality Housing buildings) for the applicable zoning district. For the purpose of this Section, defined terms include those set forth in Section 12-10 and Section 23-911.

(a) R10 Districts outside of #Inclusionary Housing designated areas#

The #residential floor area ratio# of a #compensated zoning lot# may be increased from a base #floor area ratio# of 10.0 to a maximum #floor area ratio# of 12.0 at the rate set forth in this Section, if such #compensated zoning lot# provides #affordable housing# that is restricted to #low income floor area#.

For each square foot of #floor area# provided for a type of #affordable housing# listed in the table in this Section, the #floor area# of the #compensated zoning lot# may be increased by the number of square feet set forth in the table of this paragraph (a), as applicable. Any #generating site# for which #public funding# has been received within the 15 years preceding the #regulatory agreement date#, or for which

#public funding# is committed to be provided subsequent to such date, shall be deemed to be provided with #public funding#.

OPTIONS

| | | |
|---|---|---|
| Without #public funding# | #New construction affordable housing# or #substantial rehabilitation affordable housing# | 3.5 |
| | #Preservation affordable housing# | 2.0 |
| With #public funding# | #New construction affordable housing#, #substantial rehabilitation affordable housing# or #preservation affordable housing# | 1.25 |

(b) #Inclusionary Housing designated areas#

The #residential floor area# of a #zoning lot# may not exceed the base #floor area ratio# set forth in the table in this Section, except that such #floor area# may be increased on a #compensated zoning lot# by 1.25 square feet for each square foot of #low income floor area# provided, up to the maximum #floor area ratio# specified in the table of this paragraph (b), as applicable. However, the amount of #low income floor area# required to receive such #floor area compensation# need not exceed 20 percent of the total #floor area#, exclusive of ground floor non-#residential floor area#, or any #floor area# increase for the provision of a #FRESH food store#, on the #compensated zoning lot#.

Maximum #Residential Floor Area Ratio#

| District | Base #floor area ratio# | Maximum #floor area ratio# |
|---|---|---|
| R6B | 2.00 | 2.20 |
| R6[1] | 2.20 | 2.42 |
| R6[2] R6A R7-2[1] | 2.70 | 3.60 |
| R7A R7-2[2] | 3.45 | 4.60 |
| R7-3 | 3.75 | 5.0 |
| R7D | 4.20 | 5.60 |
| R7X | 3.75 | 5.00 |
| R8 | 5.40 | 7.20 |

| | | |
|---|---|---|
| R9 | 6.00 | 8.00 |
| R9A | 6.50 | 8.50 |
| R9D | 7.5 | 10.0 |
| R9X | 7.3 | 9.70 |
| R10 | 9.00 | 12.00 |

---

[1] for #zoning lots#, or portions thereof, beyond 100 feet of a #wide street#

[2] for #zoning lots#, or portions thereof, within 100 feet of a #wide street#

(c) Special provisions for certain areas

(1) Optional provisions for #large-scale general developments# in C4-6 or C5 Districts

Within a #large-scale general development# in a C4-6 or C5 District, the special optional regulations as set forth in this paragraph (c)(1) inclusive, modify the provisions of paragraph (b) of this Section:

(i) The #residential floor area# of a #development# or #enlargement# may be increased by 0.833 square feet for each one square foot of #moderate income floor area#, or by 0.625 square feet for each one square foot of #middle income floor area#, provided that for each square foot of such #floor area compensation#, there is one square foot of #floor area compensation#, pursuant to paragraph (b) of this Section;

(ii) However, the amount of #affordable housing# required to receive such #floor area compensation# need not exceed the amounts specified in this paragraph, (c)(1)(ii). If #affordable housing# is provided for both #low income# and #moderate income households#, the amount of #moderate income floor area# need not exceed 15 percent of the total #floor area#, exclusive of ground floor non-#residential floor area#, on the #zoning lot#, provided that the amount of #low income floor area# is at least 10 percent of the total #floor area#, exclusive of ground floor non-#residential floor area#, on the #zoning lot#. If #affordable housing# is provided for both #middle income households# and #low income households#, the amount of #middle income floor area# need not exceed 20 percent of the total #floor area#, exclusive of ground floor non-#residential floor area#, on the #zoning lot#, provided that the amount of #low income floor area# is at least 10 percent of the total #floor area#, exclusive of ground floor non-#residential floor area#, on the #zoning lot#.

For the purposes of this paragraph, (c)(1), inclusive, #low income floor area# may be considered #moderate income floor area# or #middle income floor area#, and #moderate income floor area# may be considered #middle income floor area#.

(2) Special provisions for #large-scale general developments# in Community District 1 in the Borough of Queens

Special provisions shall apply to #zoning lots# within a #large-scale general development# that contains R6B, R7A and R7-3 Districts within an #Inclusionary Housing designated area#, as follows:

(i) For #zoning lots#, or portions thereof, that are located within R6B, R7A or R7-3 Districts, the base #floor area ratio# set forth in paragraph (b) of this Section shall not apply. No #residential development# or #enlargement# shall be permitted unless #affordable floor area# is provided pursuant to the provisions of this paragraph. The amount of #low-income floor area# provided shall equal no less than 10 percent of the #floor area# on such #zoning lot#, excluding any ground floor #non-residential floor area#, #floor area# within a #school#, or any #floor area# increase resulting from the provision of a #FRESH food store# and the amount of #moderate-income floor area# provided shall equal no less than 15 percent of the #floor area# on such #zoning lot#, excluding any ground floor #non-residential floor area#, #floor area# within a #school#, or any #floor area# increase resulting from the provision of a #FRESH food store#. For the purposes of this paragraph (c)(2)(i), inclusive, #low income floor area# may be considered #moderate income floor area#; and

(ii) The amount of #affordable floor area# utilizing #public funding# that may count toward satisfying the #affordable floor area# required in paragraph (c)(2)(i) of this Section shall be determined in accordance with procedures prescribed by the City Planning Commission pursuant to the provisions of Section 74-743 (Special provisions for bulk modification).

(3) Special provisions for #compensated zoning lots#

Special provisions shall apply to #compensated zoning lots# located within:

(i) R6, R7-3 and R8 Districts on #waterfront blocks# in #Inclusionary Housing designated areas# within Community District 1, Borough of Brooklyn, as set forth in Section 62-352; or

(ii) the #Special Hudson Yards District#, #Special Clinton District# and #Special West Chelsea District#, as set forth in Sections 93-23, 96-21 and 98-26, respectively.

**23-155**
**Affordable independent residences for seniors**
R6 R7 R8 R9 R10

In the districts indicated, for #buildings# complying with the height and setback regulations for #Quality Housing buildings# set forth in Section 23-66, the maximum #floor area ratio# for #affordable independent residences for seniors# shall be as set forth in the following table, and the maximum #lot coverage# shall be as set forth in Section 23-153 (For Quality Housing buildings), as applicable.

For #buildings# in R6, R7, R8, R9 or R10 Districts without a letter suffix utilizing the basic #bulk# regulations, the maximum #floor area ratio# and #open space ratio# for #affordable independent residences for seniors# shall be as set forth for #residential uses# in Sections 23-151 (Basic regulations for R6 through R9 Districts) and 23-152 (Basic regulations for R10 Districts), as applicable.

MAXIMUM
FLOOR AREA RATIO FOR
AFFORDABLE INDEPENDENT RESIDENCES FOR SENIORS
IN QUALITY HOUSING BUILDINGS

| District | Maximum #Floor Area Ratio# |
|---|---|
| R6 R6A R7B | 3.90 |
| R6B | 2.20 |
| R7 R7A | 5.01 |
| R7D | 5.60 |
| R7X | 6.00 |
| R8 R8A R8X | 7.20 |
| R8B | 4.00 |
| R9 | 8.00 |
| R9A | 8.50 |
| R9X | 9.70 |
| R9D | 10.00 |
| R10 R10A R10X | 12.00 |

**23-156**
**Special lot coverage provisions for certain interior or through lots**
R6 R7 R8 R9 R10

In the districts indicated, the maximum #lot coverage# set forth in 23-153 (For Quality Housing buildings), may be increased for shallow #zoning lots# in accordance with paragraph (a) of this Section, and may be increased for #interior# or #through lots# within one hundred feet of corners or located along the short dimension of the #block#, in accordance with paragraphs (b) of this Section.

(a) Shallow #zoning lots#

The maximum #lot coverage# for shallow #interior# or #through lots# may be increased as follows:

(1) For shallow #interior lots#

In the districts indicated, if an #interior lot#, or portion thereof, was owned separately and individually from all other adjoining tracts of land, both on December 15, 1961, and on the date of application for a #building permit#, and is less than 95 feet deep at any point, the maximum #lot coverage# of such #zoning lot# may be increased by one percent for every five feet the depth of such #zoning lot#, or portion thereof, is less than 95 feet.

(2) For shallow #through lots#

In the districts indicated, if a #through lot#, or portion thereof was owned separately and individually from all other adjoining tracts of land, both on December 15, 1961, and on the date of application for a #building permit#, and is less than 190 feet deep at any point, the maximum #lot coverage# of such #zoning lot# may be increased by one percent for every five feet the depth of such #zoning lot#, or portion thereof, is less than 190 feet.

(3) Special provisions for #zoning lots# created after December 15, 1961

Notwithstanding the provisions of paragraphs (a) and (b) of this Section, the special #lot coverage# provisions of this Section may be applied to a #zoning lot# created after December 15, 1961, or portion thereof, provided that the shallow lot condition was in existence on December 15, 1961, and subsequently, such shallow lot condition on the #zoning lot#, or portion thereof, has neither increased nor decreased in depth.

(4) For #zoning lots# with shallow portions

Where a portion of a #zoning lot# is less than 95 feet for an #interior lot#, or 190 feet for a #through lot#, an adjusted maximum #lot coverage# shall be established for the #zoning lot# by multiplying the maximum percent of #lot coverage# permitted for each portion of the #zoning lot# established pursuant to paragraphs (a) and (b) of this Section by the #lot area# of such portion. The sum of the areas of #lot coverage# thus obtained shall be the maximum area of #lot coverage# for the #zoning lot#. Such maximum area of #lot coverage#, divided by the #lot area# of the #zoning lot#, shall be the adjusted maximum percent of #lot coverage# for the #zoning lot#.

(5) Maximum coverage

In no event shall the maximum #lot coverage# of an #interior lot# or #through lot# exceed 80 percent. Shallow portions of a #zoning lot# creating an adjusted maximum #lot coverage# pursuant to paragraph (d) of this Section may exceed such maximum, so long as the entire #zoning lot# complies with such maximum.

(b) Within one hundred feet of corners or along the short dimension of the #block#

The maximum #lot coverage# for #interior# or #through lots#, or portions thereof, within one hundred feet of the corner, or located along the short dimension of the #block#, may be increased as follows:

(1) Within one hundred feet of the corner

In the districts indicated, for #interior# or #through lots#, or portions thereof, within 100 feet of the point of intersection of two #street lines# intersecting at an angle of 135 degrees or less, the maximum #lot coverage# shall be 100 percent.

(2) Along the short dimension of the block

In the districts indicated, whenever a #front lot line# of an #interior# or #through lot# coincides with all or part of a #street line# measuring less than 230 feet in length between two intersecting #streets#, the maximum #lot coverage# for such #zoning lot#, or portion thereof, shall be 100 percent within 100 feet of such #front lot line#.

**23-16**

**Special Floor Area and Lot Coverage Provisions for Certain Areas ~~Existing Public Amenities for Which Floor Area Bonuses Have Been Received~~**

The #floor area ratio# provisions of Sections 23-14 (Open Space and Floor Area Regulations in R1 through R5 Districts) and 23-15 (Open Space and Floor Area Regulations in R6 through R10 Districts), inclusive, shall be modified for certain areas, as follows:

(a) For tower-on-a-base buildings in R9 Districts

In R9 Districts, for #zoning lots# where #buildings# are #developed# or #enlarged# pursuant to the tower-on-a-base provisions of Section 23-651, the maximum #floor area ratio# shall be 7.52, and the maximum #lot coverage# shall be 100 percent on a #corner lot# and 70 percent on an #interior lot#.

(b) For R10 Districts in Community District 7 in the Borough of Manhattan

Within the boundaries of Community District 7 in the Borough of Manhattan, in R10 Districts, except R10A or R10X Districts, the maximum #floor area ratio# shall be 10.0.

(c) For R8 Districts in Community District 9 in the Borough of Manhattan

Within the boundaries of Community District 9 in the Borough of Manhattan, all #buildings# located in R8 Districts north of West 125th Street shall be #developed# or #enlarged# pursuant to the Quality Housing Program and are subject to the #floor area# regulations set forth in Section 23-153 (For Quality Housing buildings).

(d) Optional provisions for certain R5 and R6 Districts in Community District 12 in the Borough of Brooklyn

Within the area bounded by 39th Street, Dahill Road, Ditmas Avenue, McDonald Avenue, Bay Parkway, 61st Street and Fort Hamilton Parkway in Community Board 12, in the Borough of Brooklyn, special optional provisions are established for #zoning lots# containing #buildings# used exclusively as #single-#, #two-# or three-#family residences#, as set forth in this Section, inclusive. Except as modified by the express provisions of this Section, the regulations of R5 and R6 Districts remain in effect.

(1) #Floor area#, #lot coverage#, #open space#, density and #height factor# regulations

Where the optional provisions of this Section are applied, the regulations of Article II, Chapter 3, relating to #floor area ratio#, #open space#, density and #height factor# are hereby made inapplicable. In lieu thereof, the maximum #floor area ratio# for a #corner lot# shall not exceed 1.65 and the #floor area ratio# for an #interior# or #through lot# shall not exceed 1.8 in R5 Districts and 1.95 in R6 Districts. Notwithstanding the definition of #floor area# in Section 12-10, the lowest #story# shall be included in the definition of #floor area#, and floor space used for #accessory# off-street parking spaces shall be included in the definition of #floor area# unless such spaces are located in a #cellar#. The #lot coverage# for a #corner lot# shall not exceed 55 percent and the #lot coverage# for an #interior# or #through lot# shall not exceed 60 percent in R5 Districts and 65 percent in R6 Districts.

(2) #Building# height

No #building# shall exceed a height of 35 feet above #curb level#, or three #stories#, whichever is less. Where the optional provisions of this Section are applied, the regulations of Article II, Chapter 3, relating to height and setback, are hereby made inapplicable, except that the provisions of Section 23-62 (Permitted Obstructions) shall apply.

(3) #Front yards#

In R5 Districts, the following #front yard# regulations are applicable. A #front yard# shall be provided with a depth of not less than five feet, provided that for #corner lots#, one #front yard# with a depth of not less than 10 feet is required. If the depth of the #front yard# exceeds 10 feet, such #front yard# shall have a depth of not less than 18 feet. In R6 Districts, a #front yard# is not required.

(4) #Side yards#

In R5 Districts, the following #side yard# regulations shall apply:

(i) Where an existing #building# on an adjacent #zoning lot# is located on the common #side lot line#, no #side yard# is required. However, if an open area extending along such common #side lot line# is provided, it shall be at least eight feet wide.

(ii) Where an existing #building# on an adjacent #zoning lot# is located less than eight feet from, but not on, the common #side lot line#, a #side yard# at least four feet wide is required. However, in no case shall the distance between a new or #enlarged building# and an existing #building# across a common #side lot line# on an adjacent #zoning lot# be less than eight feet.

(iii) Where an adjacent #zoning lot# is vacant or where an existing #building# on an adjacent #zoning lot# is located more than eight feet from the common #side lot line#, a #side yard# at least four feet wide is required.

(iv) In R6 Districts, a #side yard# is not required. However, when a #building# is 62 feet or more in depth, an eight foot #side yard# or an #outer court# as set forth in paragraph (d)(6) of this Section is required.

(v) Notwithstanding the provisions of paragraphs (d)(1) and (d)(3), #detached single-#, #two-# and three-#family residences# on #corner lots# shall provide #side yards# of five feet and 20 feet. #Semi-detached single-#, #two-# and three-#family residences# on #corner lots# shall provide one #side yard# of 20 feet.

(5) #Rear yards#

#Single-# or #two-family residences# consisting of #detached#, #semi-detached# or #zero lot line buildings# may project up to ten feet into a required #rear yard# or #rear yard equivalent#, provided that there is a #side yard# of at least eight feet for such #semi-detached# or #zero lot line buildings#, and that the total width of #side yards# for a #detached building# is at least eight feet.

(6) #Outer court# and minimum distance between #legally required windows# and walls or #lot lines#

In R6 Districts, the #outer court# provisions of Section 23-84 are modified as follows: an #outer court# shall have a minimum width of 10 feet and a depth of not more than twice the width.

Where a #building# is attached, along a common #side lot line#, to a portion of an existing or new #building# on an adjacent #zoning lot#, there may be a joint #outer court# with a minimum width of ten feet across such common #side lot line#. The requirements of Section 23-86 (Minimum Distance Between Legally Required Windows and Walls and Lot Lines) are hereby made inapplicable.

(7) Off-street parking in R5 and R6 Districts

No #accessory# off-street parking is required in R5 and R6 Districts.

~~(a) Elimination or reduction in size of non-bonused open area on a #zoning lot# containing a bonused amenity~~

~~In all districts, any existing open area for which a #floor area# bonus has not been utilized that occupies the same #zoning lot# as an existing #publicly accessible open area# or other public amenity, open or enclosed, for which a #floor area# bonus has been utilized, may be reduced in size or eliminated only upon certification of the Chairperson of the City Planning Commission that all bonused amenities comply with the standards under which such #floor area# bonus was granted.~~

~~(b) Nighttime closing of existing public open areas~~

~~In all #Residence Districts#, the City Planning Commission may, upon application, authorize the closing during certain nighttime hours of an existing #publicly accessible open area# for which a #floor area# bonus has been received, pursuant to Section 37-727 (Hours of access).~~

~~(c) Elimination or reduction in size of existing public amenities~~

~~In all districts, no existing #publicly accessible open area#, #arcade# or other public amenity, open or enclosed, for which a #floor area# bonus has been utilized, shall be eliminated or reduced in size except by special permit of the City Planning Commission, pursuant to Section 74-761 (Elimination or reduction in size of bonused public amenities).~~

**~~Regulations Applying in Special Situations~~**

**23-17**

**Existing Public Amenities for Which Floor Area Bonuses Have Been Received** **~~Special Provisions for Zoning Lots Divided by District Boundaries or Subject to Different Bulk Regulations~~**

~~R1 R2 R3 R4 R5 R6 R7 R8 R9 R10~~

(a) Elimination or reduction in size of non-bonused open area on a #zoning lot# containing a bonused amenity

In all districts, any existing open area for which a #floor area# bonus has not been utilized that occupies the same #zoning lot# as an existing #publicly accessible open area# or other public amenity, open or enclosed, for which a #floor area# bonus has been utilized, may be reduced in size or eliminated only upon certification of the Chairperson of the City Planning Commission that all bonused amenities comply with the standards under which such #floor area# bonus was granted.

(b) Nighttime closing of existing public open areas

In all #Residence Districts#, the City Planning Commission may, upon application, authorize the closing during certain nighttime hours of an existing #publicly accessible open area# for which a #floor area# bonus has been received, pursuant to Section 37-727 (Hours of access).

(c) Elimination or reduction in size of existing public amenities

In all districts, no existing #publicly accessible open area#, #arcade# or other public amenity, open or enclosed, for which a #floor area# bonus has been utilized, shall be eliminated or reduced in size except by special permit of the City Planning Commission, pursuant to Section 74-761 (Elimination or reduction in size of bonused public amenities).

~~In all districts, as indicated, whenever a #zoning lot# is divided by a boundary between districts or is subject to #bulk# regulations resulting in different minimum required #open space ratios#, different maximum #floor area ratios# or different #lot coverages# on portions of the #zoning lot#, the provisions set forth in Article VII, Chapter 7, shall apply.~~

**23-18**
**Special Provisions for Zoning Lots Divided by District Boundaries or Subject to Different Bulk Regulations**

R1 R2 R3 R4 R5 R6 R7 R8 R9 R10

In all districts, as indicated, whenever a #zoning lot# is divided by a boundary between districts or is subject to #bulk# regulations resulting in different minimum required #open space ratios#, different maximum #floor area ratios# or different #lot coverages# on portions of the #zoning lot#, the provisions set forth in Article VII, Chapter 7, shall apply.

**23-20**
**DENSITY REGULATIONS**

**23-21**
**Required Floor Area per Dwelling Unit ~~or Floor Area per Rooming Unit~~**

R1 R2 R3 R4 R5 R6 R7 R8 R9 R10

This Section shall apply to existing #buildings# in which the number of ~~#rooming units# or~~ #dwelling units# is increased as well as to all new #development#.

Any given #floor area# shall be counted only once in meeting the #floor area# requirements.

In all districts, as indicated, the #floor area# requirement per #dwelling unit# ~~or #rooming unit#~~ shall not be less than as set forth in this Section, except as provided in Sections 23-24 (Special Provisions for Buildings ~~Used~~

~~Partly for Non-Residential~~ Containing Multiple Uses) or Section 23-25 (Special Provisions for Existing Small Zoning Lots).

**23-22**
**Maximum Number of Dwelling Units ~~or Rooming Units~~**

R1 R2 R3 R4 R5 R6 R7 R8 R9 R10

In all districts, as indicated, the maximum number of #dwelling units# ~~or #rooming units#~~ shall equal the maximum #residential floor area# permitted on the #zoning lot# divided by the applicable factor in the following table. In R1 through R5 Districts, ~~no #rooming units# shall be permitted and~~ any #dwelling unit# shall be occupied by only one #family#. Fractions equal to or greater than three-quarters resulting from this calculation shall be considered to be one #dwelling unit# ~~or #rooming unit#~~.

For the purposes of this Section, where a #floor area ratio# is determined pursuant to Section 23-151 (Basic regulations for R6 through R9 Districts) ~~Sections 23-142 or 23-143~~, notwithstanding the #height factor# of the #zoning lot#, the maximum #residential floor area ratio# shall be 2.43 in an R6 District within 100 feet of a #wide street#, 3.44 in an R7 District, and 6.02 in an R8 District. In an R6 District beyond 100 feet of a #wide street#, the maximum #residential floor area ratio# shall be as specified in Section 23-151 ~~Sections 23-142 or 23-143~~, or 2.2, whichever is greater.

For #affordable independent residences for seniors#, there shall be no applicable #dwelling unit# factor.

For #zoning lots# with #buildings# containing multiple #uses# or multiple #buildings# with different #uses#, special provisions are set forth in Section 23-24 (Special Provisions for Buildings Containing Multiple Uses) to determine the maximum number of #dwelling units# permitted.

FACTOR FOR DETERMINING MAXIMUM NUMBER
OF DWELLING UNITS ~~OR ROOMING UNITS~~

| District | Factor for #Dwelling Units# | ~~Factor for #Rooming Units#~~ |
|---|---|---|
| R1-1 | 4,750 | |
| R1-2 | 2,850 | |
| R2, R2A | 1,900 | |
| R2X | 2,900 | |

| | | |
|---|---|---|
| R3-1 R3-2* | 625 | |
| R3A | 710 | |
| R3-2 R4 R4-1 R4B | 870 | |
| R3X | 1,000 | |
| R4A | 1,280 | |
| R4** R5** R5B | 900 | |
| R5, R5D | 760 | |
| R5A | 1,560 | |
| R5B*** | 1,350 | |
| R6 R7 R8 R9 R10 ~~R8B~~ | 680 | ~~500~~ |
| ~~R8 R8A R8X R9 R9A~~ | ~~740~~ | ~~530~~ |
| ~~R9-1 R9X R10~~ | ~~790~~ | ~~600~~ |

* for #single-# and #two-family detached# and #semi-detached residences#

** for #residences# in a #predominantly built-up area#

*** for #zoning lots# with less than 40 feet of #street# frontage and existing on the effective date of establishing such districts on the #zoning maps#

~~**23-221**~~
~~**Maximum number of dwelling units or rooming units for non-profit residences for the elderly**~~
~~R3-2 R4 R5 R6 R7~~

~~In the districts indicated, except R4-1, R4A, R4B and R5A Districts, the maximum number of #dwelling units# or, where permitted, #rooming units# for #non-profit residences for the elderly#, shall equal the maximum #residential floor area# permitted on the #zoning lot# divided by the applicable factor in the following table. No #rooming units# shall be permitted in R3-2, R4 or R5 Districts. Fractions equal to or greater than three-quarters resulting from this calculation shall be considered to be one #dwelling unit# or #rooming unit#.~~

~~FACTOR FOR DETERMINING MAXIMUM NUMBER OF DWELLING UNITS OR ROOMING UNITS~~

| ~~District~~ | ~~Factor for #Dwelling Units#~~ | ~~Factor for #Rooming Units#~~ |
|---|---|---|
| ~~R3-2~~ | ~~680~~ | |
| ~~R4 R5B~~ | ~~680~~ | |
| ~~R5 R5D~~ | ~~700~~ | |
| ~~R6 R7~~ | ~~710~~ | ~~570~~ |

**23-23**
**Minimum Size of Dwelling Units**

R3 R4 R5

(a) In the districts indicated, for all #buildings# other than #affordable independent residences for seniors ~~non-profit residences for the elderly~~#, each #dwelling unit# shall contain at least 300 square feet of #floor area#.

R3 R4A R4-1

(b) In the districts indicated, for all two-family #detached# and, where permitted, two-family #semi-detached# and #zero lot line buildings#, one #dwelling unit# shall contain at least 925 square feet.

**Regulations Applying in Special Situations**

**23-24**
**Special Provisions for Buildings Containing Multiple Uses ~~Used Partly for Non-Residential Uses~~**

R1 R2 R3 R4 R5 R6 R7 R8 R9 R10

~~In all districts, as indicated, if a #building# is used partly for #residences# and partly for non-#residential uses# (other than #community facility uses#, the provisions for which are set forth in Article II, Chapter 4),~~ For #zoning lots# with #buildings# containing multiple #uses# or multiple #buildings# with different #uses#, the maximum number of #dwelling units# ~~or #rooming units#~~ permitted on the #zoning lot# shall equal the total #residential floor area# permitted on the #zoning lot# after deducting any non-#residential floor area# and any #floor area# allocated to #affordable independent residences for seniors#, divided by the applicable factor in Section 23-22

(Maximum Number of Dwelling Units ~~or Rooming Units~~). Where #floor area# in a #building# is shared by multiple #uses#, the #floor area# for such shared portion shall be proportionately attributed to such #uses#, based on the percentage each #use# occupies of the total #floor area# of the #zoning lot# less any shared #floor area#.

**23-25**
**Special Provisions for Existing Small Zoning Lots**

R1 R2 R3 R4 R5 R6 R7 R8 R9 R10

In all districts, as indicated, notwithstanding the provisions of Section 23-22 (Maximum Number of Dwelling Units ~~or Rooming Units~~), one #single-family detached residence# or, where permitted, one #single-family residence#, may be built upon a #zoning lot# consisting entirely of a tract of land that was owned separately and individually from all other adjoining tracts of land, both on December 15, 1961, and on the date of application for a building permit.

* * *

**23-30**
**LOT AREA AND LOT WIDTH REGULATIONS**

* * *

**Regulations Applying in Special Situations**

* * *

**23-35**
**Special Provisions for Zoning Lots Containing Certain Community Facility Uses in Lower Density Growth Management Areas**

In R1, R2, R3-1, R3A, R3X, R4-1 and R4A Districts in #lower density growth management areas#, the minimum #lot area# and #lot width# regulations of this Section shall apply to any #zoning lot# containing #buildings# used for:

(a) ambulatory diagnostic or treatment health care facilities, as listed in Section 22-14 (Use Group 4), except where such #zoning lot# contains #buildings# used for hospitals or #long-term care facilities# ~~nursing homes as defined in the New York State Hospital Code~~; and

* * *

**23-40**
**YARD REGULATIONS**

**Definitions and General Provisions**

*  *  *

**23-44**
**Permitted Obstructions in Required Yards or Rear Yard Equivalents**

In all #Residence Districts#, the following obstructions shall be permitted within a required #yard# or #rear yard equivalent#:

(a) In any #yard# or #rear yard equivalent#:

*  *  *

(b) In any #rear yard# or #rear yard equivalent#:

(1) Balconies, unenclosed, subject to the provisions of Section 23-13;

(2) Breezeways;

(3) Fire escapes;

(4) Greenhouses, non-commercial, #accessory#, limited to one #story# or 15 ~~14~~ feet in height above adjoining grade, whichever is less, and limited to an area not exceeding 25 percent of a required #rear yard#;

(5) Parking spaces, off-street, #accessory#, for automobiles or bicycles, provided that:

(i) if #accessory# to a #single-# or #two-family residence#, the height of a #building# containing such parking spaces shall not exceed ten feet in height above the adjoining grade and such #building# shall be #detached# from such #residence#. Furthermore, if located in an R1 District, such #building# may not be nearer than five feet to a #rear lot line# or #side lot line#. In R2A Districts, detached garages shall be included in #lot coverage#. In addition, solar energy systems, limited to 18 inches in height, as measured perpendicular to the roof surface, shall be permitted upon the roof of such #accessory building# within the #rear yard#;

(ii) if #accessory# to any other kind of #building# containing #residences#, the height of a #building#, or portion thereof, containing such parking spaces within the #rear yard#, shall not exceed ten feet above adjoining grade, including the apex of a pitched roof in R3, R4 or R5 Districts, or 15 ~~fourteen~~ feet above #curb level# or #base plane#, as applicable, in R6, R7, R8, R9 or R10 Districts. In addition, decks, parapet walls, roof thickness, skylights, vegetated roofs, and weirs, as set forth in Section 23-62 (Permitted Obstructions), and solar energy systems, limited to 18 inches in height, as measured

perpendicular to the roof surface, shall be permitted upon the roof of such #accessory building# within the #rear yard#;

* * *

(9) any portion of a #building# used for #accessory residential uses#, for #Quality Housing buildings# on #zoning lots# in R6 through R10 Districts, other than R6B, R7B, or R8B Districts, providing either #affordable housing# pursuant to the Inclusionary Housing Program, as set forth in Section 23-90, inclusive, or #affordable independent residences for seniors#, where at least 20 percent of the #floor area# of the #zoning lot# is allocated to such #use#, provided that the height of such #building# portion does not exceed one #story#, or 15 feet above the adjoining grade, whichever is less. Such space shall be accessible to all residents of the #building#. No #dwelling unit#, or portion thereof, shall be permitted in a #rear yard# or #rear yard equivalent#. In addition, decks, parapet walls, roof thickness, skylights, vegetated roofs, and weirs, as set forth in Section 23-62 (Permitted Obstructions), and solar energy systems, limited to 18 inches in height, as measured perpendicular to the roof surface, shall be permitted upon the roof of such portion of a #building# within the #rear yard#.

However, no portion of a #rear yard equivalent# which is also a required #front yard# or required #side yard# may contain any obstructions not permitted in such #front yard# or #side yard#.

* * *

**Basic Regulations - Side Yards**

**23-46**
**Minimum Required Side Yards**

* * *

**23-462**
**Side yards for all other buildings containing residences**

R3-2 R4 R5 R6 R7 R8 R9 R10

In the districts indicated, except as set forth in Section 23-461 (Side yards for single- or two-family residences) or Section 23-49 (Special Provisions for Side Lot Line Walls), #side yards# shall be provided for all #zoning lots# with #buildings# containing #residences# as provided in this Section:

* * *

R6 R7 R8 R9 R10

(c) In the districts indicated, no #side yards# are required. However, if any open area extending along a #side lot line# is provided at any level, it shall have a minimum width of eight feet, measured perpendicular to the #side lot line#, and extend along the entire #side lot line#, except where a #court# is provided in accordance with the applicable provisions of Section 23-60. ~~measure at least eight feet wide for the entire length of the #side lot line#~~ Obstructions permitted pursuant to paragraph (a) of Section 23-44 (Permitted Obstructions in Required Yards or Rear Yard Equivalents) shall be permitted in such open areas.

* * *

**Rear Yards**

**23-52**
**Special Provisions for Shallow Interior Lots**
~~R3 R4 R5 R6 R7 R8 R9 R10~~

R3 R4 R5

(a) In the districts indicated, if an #interior lot#:

(1) was owned separately and individually from all other adjoining tracts of land, both on December 15, 1961, and on the date of application for a building permit; and

(2) is less than 70 feet deep at any point;

the depth of a required #rear yard# for such #interior lot# may be reduced by one foot for each foot by which the maximum depth of such #zoning lot# is less than 70 feet. On any #interior lot# with a maximum depth of 50 feet or less, the minimum depth of a required #rear yard# shall be ten feet.

R6 R7 R8 R9 R10

(b) In the districts indicated, if an #interior lot#, or portion thereof:

(1) was owned separately and individually from all other adjoining tracts of land, both on December 15, 1961, and on the date of application for a building permit; and

(2) is less than 95 feet deep at any point;

the depth of a required #rear yard#, or portion thereof, for such #interior lot#, may be reduced by six inches for each foot by which the depth of a #zoning lot#, or portion thereof, is less than 95 feet. However, in no event shall the minimum depth of a #required yard#, or portion thereof, be reduced to less than ten feet.

(c) Special provisions for #zoning lots# created after December 15, 1961

Notwithstanding the provisions of paragraph (b) of this Section, in R6 through R10 Districts, the special #rear yard# provisions of this Section may be applied to a #zoning lot# created after December 15, 1961, or portion thereof, provided that the shallow lot condition was in existence on December 15, 1961, and subsequently, such shallow lot condition on the #zoning lot#, or portion thereof, has neither increased nor decreased in depth.

~~In the districts indicated, if an #interior lot#:~~

~~(a) was owned separately and individually from all other adjoining tracts of land, both on December 15, 1961 and on the date of application for a building permit; and~~

~~(b) is less than 70 feet deep at any point;~~

~~the depth of a required #rear yard# for such #interior lot# may be reduced by one foot for each foot by which the maximum depth of such #zoning lot# is less than 70 feet. On any #interior lot# with a maximum depth of 50 feet or less, the minimum depth of a required #rear yard# shall be ten feet.~~

**23-53**
**Special Provisions for Through Lots**

* * *

**23-532**
**Required rear yard equivalents**

R1 R2 R3 R4 R5 R6 R7 R8 R9 R10

In all districts, except for #Quality Housing buildings# in R6 through R10 districts, the provisions for which are set forth in Section 23-533 ~~as indicated~~, on any #through lot# that is 110 feet or more in maximum depth from #street# to #street#, one of the following #rear yard equivalents# shall be provided:

* * *

However, in #lower density growth management areas# and in R5D~~, R6A, R6B, R7A, R7B, R7D, R7X, R8A, R8B, R8X, R9A, R9D, R9X, R10A and R10X~~ Districts, ~~and for #Quality Housing buildings# in other R6 through R10 Districts,~~ on any #through lot# at least 180 feet in maximum depth from #street# to #street#, a #rear yard equivalent# shall be provided only as set forth in paragraph (a) of this Section.

Any such #rear yard equivalent# shall be unobstructed from its lowest level to the sky, except as provided in Section 23-44 (Permitted Obstructions in Required Yards or Rear Yard Equivalents).

**23-533**

**Required rear yard equivalents for Quality Housing buildings**
R6 R7 R8 R9 R10

For #Quality Housing buildings# in R6 through R10 districts, on any #through lot# that is 110 feet or more in maximum depth from #street# to #street#, a #rear yard equivalent# consisting of an open area with a minimum depth of 60 feet, midway (or within ten feet of being midway) between the two #street lines# upon which such #through lot# fronts, shall be provided.

However, for #through lots# with a depth of 190 feet or less an open area with a minimum depth equivalent to the depth required pursuant to Section 23-534 (Special Provisions for Shallow Through Lots), may be provided. Additionally, for #through lots# with a depth of 180 feet or less, one of the following #rear yard equivalents# may be provided as an alternative:

(a) two open areas, each adjoining and extending along the full length of a #street line# and each with a minimum depth of 30 feet measured from such #street line#, except the depth of such required open area along one #street line# may be decreased, provided that a corresponding increase in the depth of the open area along the other #street line# is made; or

(b) an open area adjoining and extending along the full length of each #side lot line# with a minimum width of 30 feet measured from each such #side lot line#, except that the width of such required open area along one #side lot line# may be decreased, provided that a corresponding increase in the depth of the open area along the other #street line# is made. If an open area along a #side lot line# is provided, it shall be at least eight feet.

Any such #rear yard equivalent# shall be unobstructed from its lowest level to the sky, except as provided in Section 23-44 (Permitted Obstructions in Required Yards or Rear Yard Equivalents).

**23-534**
**Special Provisions for Shallow Through Lots**
R6 R7 R8 R9 R10

(a) In the districts indicated, if a #through lot#, or portion thereof:

(1) is less than 190 feet deep at any point; and

(2) was less than 190 deep, both on December 15, 1961 and on the date of application for a building permit;

the depth of a required #rear yard equivalent#, or portion thereof, for such #through lot#, may be reduced by one foot for each foot by which the depth of a #zoning lot#, or portion thereof, is less than 190 feet. However, in no event shall the minimum depth of a required #rear yard equivalent#, or portion thereof, provided between two or more #buildings# on a single #zoning lot# be reduced to less than 40 feet, and in

no event shall the minimum depth of other required #yard#, or portions thereof, be reduced to less than 20 feet.

(b) Special provisions for #zoning lots# created after December 15, 1961

Notwithstanding the provisions of paragraph (a) of this Section, in R6 through R10 Districts, the special #lot coverage# provisions of this Section may be applied to a #zoning lot# created after December 15, 1961, or portion thereof, provided that the shallow lot condition was in existence on December 15, 1961, and, subsequently, such shallow lot condition on the #zoning lot#, or portion thereof, has neither increased nor decreased in depth.

* * *

**23-54**
**Other Special Provisions for Rear Yards**

* * *

**23-543**
**For zoning lots with multiple rear lot lines**

R1 R2 R3 R4 R5 R6 R7 R8 R9 R10

In all districts, as indicated, for #zoning lots# with multiple #rear lot lines#, if a #rear yard# extends from a #rear lot line# away from the #street line# which is used to determine such #rear lot line#, the following rules shall apply along such #rear lot line#:

(a) In all districts, a #rear yard# with a minimum depth of 30 feet shall be provided where such #rear lot line# coincides with a #rear lot line# of an adjoining #zoning lot#, except as modified in Section 23-52 (Special Provisions for Shallow Interior Lots).

* * *

**23-544**
**In certain districts**

R2X

In the district indicated, a #residential building# may extend ten feet into a required #rear yard# or #rear yard equivalent# pursuant to the provisions of Section 23-631 (General provisions ~~Height and setback in R1, R2, R3, R4 or R5 Districts~~).

* * *

**23-60**

## HEIGHT AND SETBACK REGULATIONS

~~**Definitions and General Provisions**~~

### 23-61
~~**Definitions**~~ **Applicability**
R1 R2 R3 R4 R5 R6 R7 R8 R9 R10

~~Words in italics are defined in Section 12-10 (DEFINITIONS) or, if applicable exclusively to this Section, in this Section.~~

In all districts, as indicated, height and setback regulations for a #building or other structure# shall be as set forth in Section 23-60 (HEIGHT AND SETBACK REGULATIONS), inclusive.

Height and setback regulations applicable to R1 through R5 Districts are set forth in Section 23-63. #Buildings# in R5D districts shall also comply with additional provisions set forth in Article II, Chapter 8.

Height and setback regulations applicable to R6 through R10 Districts are set forth in Sections 23-64 (Basic Height and Setback Requirements), 23-65 (Tower Regulations) and 23-66 (Height and Setback Requirements for Quality Housing Buildings), as applicable.

In R6A, R6B, R7A, R7B, R7D, R7X, R8A, R8B, R8X, R9A, R9D, R9X, R10A or R10X Districts, all #buildings# shall comply with the #bulk# regulations for #Quality Housing buildings# set forth in Sections 23-62 and 23-66. In R6, R7, R8, R9 or R10 Districts without a letter suffix, a #building# may be #developed# or #enlarged# pursuant to the basic height and setback requirements of Sections 23-62, 23-64 or 23-65, as applicable, or pursuant to the #bulk# regulations for #Quality Housing buildings#. All #Quality Housing buildings# shall also comply with additional provisions set forth in Article II, Chapter 8, as applicable.

Special height and setback provisions are set forth in Sections 23-67 (Special Height and Setback Provisions for Certain Areas) for #zoning lots# adjoining a #public park#, as well as for certain areas in Community Districts 7, 4 and 9 in the Borough of Manhattan. Additional provisions are set forth in Sections 23-68 (Special Provisions for Zoning Lots Divided by District Boundaries) and 23-69 (Special Height Limitations).

### 23-62
**Permitted Obstructions**

In all #Residence Districts#, except as provided in Section 23-621 (Permitted obstructions in certain districts), the obstructions listed in paragraphs (a) through (r) in this Section shall be permitted to penetrate a maximum height limit or #sky exposure plane# set forth in Sections 23-63 (Height and Setback Requirements in R1 Through R5 Districts ~~Maximum Height of Walls and Required Setbacks~~), 23-64 (Basic Height and Setback Requirements ~~Alternate Front Setbacks~~), 23-66 (Height and Setback Requirements for Quality Housing Buildings) or 23-69 (Special Height Limitations):

(a) Awnings and other sun control devices, provided that when located at a level higher than the first #story#, excluding a #basement#, all such awnings and other sun control devices:

* * *

(c) #Building# columns, having an aggregate width equal to not more than 20 percent of the #aggregate width of street walls# of a #building#, to a depth not exceeding 12 inches, in an #initial setback distance#, optional front open area, or any other required setback distance or open area set forth in Sections 23-63, 23-64, ~~or~~ 23-65 (Tower Regulations) or 23-66;

(d) Chimneys or flues, with a total width not exceeding 10 percent of the #aggregate width of street walls# of a #building# at any level;

* * *

**23-621**
**Permitted obstructions in certain districts**

R2A R2X R3 R4 R4A R4-1 R5A

(a) In the districts indicated, permitted obstructions are limited to chimneys, exterior wall thickness, flag poles or aerials, parapet walls, roof thickness, skylights, solar energy systems and vegetated roofs pursuant to Section 23-62. However, in R3-2, and R4 Districts, except R4A, R4B and R4-1 Districts, elevator or stair bulkheads, roof water tanks and #accessory# mechanical equipment provided pursuant to paragraph (g) of Section 23-62 shall be permitted for #buildings# containing #affordable independent residences for seniors#.

* * *

R6 R7 R8 R9 R10 ~~R6A R6B R7A R7B R7D R7X R8A R8B R8X R9A R9D R9X R10A R10X~~

(c) In the districts indicated, for #Quality Housing building#, ~~and for #Quality Housing buildings# in other R6, R7, R8, R9 and R10 Districts,~~ the permitted obstructions set forth in Section 23-62 shall apply to any #building or other structure#, except that within a required front setback distance above a maximum base height, the following rules shall apply:

* * *

**23-63**
**~~Maximum Height of Walls and Required Setbacks~~ Height and Setback Requirements in R1 Through R5 Districts**

R1 R2 R3 R4 R5 ~~R6 R7 R8 R9 R10~~

In the districts indicated, the height and setback of a #building or other structure# shall be as set forth in Section 23-631 (General provisions). Additional provisions pertaining to required side and rear setbacks are set forth in Section 23-632 (Required side and rear setbacks).

~~In all districts, as indicated, the maximum height of a front wall or of any other portion of a #building or other structure# shall be set forth in this Section, except as otherwise provided in Sections 23-62 (Permitted Obstructions), 23-64 (Alternate Front Setbacks), 23-65 (Tower Regulations), 23-692 (Height limitations for narrow buildings or enlargements), 23-693 (Special provisions applying adjacent to R1 through R6B Districts) or 74-85 (Special Height and Setback Regulations).~~

**23-631**
**~~Height and setback in R1, R2, R3, R4 and R5 Districts~~ General provisions**

Height and setback regulations for R1 through R5 Districts are set forth in this Section. Such maximum heights may only be penetrated by permitted obstructions set forth in Section 23-62.

R1 R2

(a) In the districts indicated, except R1-2A, R2A and R2X Districts, the front wall or any other portion of a #building or other structure# shall not penetrate the #sky exposure plane# set forth in the following table:

* * *

R1-2A R2A R2X R3 R4 R4A R4-1 R5A

(b) In the districts indicated, the height and setback of a #building or other structure# shall be as set forth herein except where modified pursuant to paragraphs (h) and ~~(i)~~ (j) of this Section.

For the purposes of this Section, where #base planes# of different elevations apply to different portions of a #building or other structure#, each such portion of the #building# may be considered to be a separate #building#. Furthermore, for the purposes of this Section, #building segments# may be considered to be separate #buildings# and #abutting semi-detached buildings# may be considered to be one #building#.

* * *

Above these heights, sloping planes control the maximum height of the #building or other structure# requiring either a setback or a pitched roof. These planes start at the maximum permitted height of the perimeter walls and meet at a ridge line of 35 feet above the #base plane#. The exact locations of these planes are flexible and are determined in the steps set forth in paragraphs (b)(1) through (b)(5), as follows:

(1) At a height of 35 feet above and parallel to the #base plane#, a plane is projected above the area enclosed by and including the perimeter walls of the #building or other structure#. A second

plane (the perimeter wall plane) is projected in the same manner at a height of 21 or 25 feet above the #base plane#. (See Figure A)

*  *  *

(5) The perimeter walls are then extended vertically beyond the perimeter wall plane, up to the heights defined by the sloping planes generated in paragraph (4). (See Figure E). The perimeter walls of the #building or other structure#, the sloping planes and the perimeter wall extensions define the #building# envelope. (See Figure F). ~~The #building# envelope may be penetrated above the maximum permitted perimeter wall height by those items set forth in Section 23-621 (Permitted obstructions in certain districts).~~ Those items listed in Section 23-44 (Permitted Obstructions in Required Yards or Rear Yard Equivalents), and roofed porches and porticoes subject to all applicable provisions, may penetrate the #building# envelope below the maximum permitted perimeter wall height. Eaves may extend the roof lines 18 inches beyond the exterior walls.

*  *  *

R4B

(c) In the district indicated, no portion of the #building or other structure#, including the apex of a roof, shall penetrate a plane 24 feet in height above the #base plane# ~~except for permitted obstructions as set forth in Section 23-62~~.

R5

(d) In the district indicated, except R5A, R5B and R5D Districts, no portion of a #building or other structure#, including the apex of a roof, may penetrate a plane 40 feet above the #base plane#. In addition, the maximum height of a #street wall# above the #base plane# shall be 30 feet. Above such height, a setback of 15 feet is required. Within the setback distance, no portion of the #building or other structure#, including the apex of a roof, may penetrate a plane rising from the maximum #street wall# height, at 20 degrees to the horizontal. On #corner lots#, the 30 foot maximum #street wall# height shall apply to only one #street# frontage. #Buildings or other structures# which utilize the optional regulations of Section 23-143 ~~23-141~~ applying to a #predominantly built-up area# shall be subject to the height and setback regulations for an R5B District. The provisions of this paragraph may be modified pursuant to ~~Section 23-62 and~~ paragraphs (h) and (j) ~~(i)~~ of this Section.

R5B

(e) In the district indicated, no portion of a #building or other structure#, including the apex of a roof, may penetrate a plane 33 feet above the #base plane#. In addition, the maximum height of a #street wall# above the #base plane# shall be 30 feet. Above such height, no portion of the #building or other structure# shall penetrate a plane rising from the maximum #street wall# height, at 20 degrees to the horizontal, to a maximum height of 33 feet above the #base plane#. On #corner lots#, the 30 foot maximum #street wall#

height shall apply to only one #street# frontage. The provisions of this paragraph may be modified pursuant to ~~Section 23-62 and~~ paragraph (h) of this Section.

R5D

(f) In the district indicated, no portion of a #building or other structure# shall penetrate a plane 45 feet, or four stories, whichever is less,~~40 feet~~ above the #base plane#. However, where the level of the finished floor of the second #story# above grade in such #building or other structure# is less than 13 feet above the level of the adjoining sidewalk, the maximum height of such #building# shall be reduced to 40 feet.

* * *

(h) The height and setback regulations of this Section are modified as follows:

(1) In R3-1 and R3-2 Districts, #single-# or #two-family detached residences# on #zoning lots# of at least 9,500 square feet in area and at least 100 feet of frontage along a #street# may use the height and setback regulations applicable in an R2 District.

~~(2) In R3 and R4A Districts, #non-profit residences for the elderly# may use the height and setback regulations applicable in an R4 District.~~

~~(3) In R5 Districts, except R5A and R5D Districts, as an alternative front setback regulation for #non-profit residences for the elderly#, no portion of the #building or other structure# shall penetrate a #sky exposure plane# which begins at a height of 27 feet above an #initial setback distance# of 10 feet and rises over the #zoning lot# at a slope of one foot of vertical distance for each foot of horizontal distance to a maximum height of 40 feet above the #base plane#. On #corner lots#, the #sky exposure plane# shall apply to only one #street# frontage. The provisions of this subparagraph may be modified pursuant to Section 23-62 and paragraph (i) of this Section.~~

(2)~~(4)~~ In the #Special Ocean Parkway District#, the #Special Coney Island Mixed Use District#, and the #Special Hunters Point Mixed Use District#, for #buildings or other structures# subject to the regulations of an R5 District other than an R5D District, no portion of a #building or other structure#, including the apex of a roof, may penetrate a plane 40 feet above the #base plane#. In addition, the maximum height of a #street wall# above the #base plane# shall be 32 feet. Above such height, a setback of 15 feet is required. Within the setback distance, no portion of the #building or other structure#, including the apex of a roof, may penetrate a plane rising from the maximum #street wall# height at 20 degrees to the horizontal. On #corner lots#, the 32 foot maximum #street wall# height shall apply to only one #street# frontage.

In these special districts, for #developments# or #enlargements# which utilize the optional regulations applicable to a #predominantly built-up area#, the maximum height of a #building# containing #residences# shall not exceed 32 feet above the #base plane#. Furthermore, for such #developments# or #enlargements# with pitched roofs, the midpoint of such pitched roof shall not

exceed a height of 32 feet above the #base plane#. The provisions of this paragraph may be modified pursuant to ~~Section 23-62 and~~ paragraph (j ~~h~~) of this Section.

(3)~~(5)~~ In accordance with Section 78-31 (Location of Buildings, Distribution of Bulk and Open Space and Modification of Height and Setback), #buildings# within a #large-scale residential development# may use the alternate height and setback regulations set forth in Section 78-31, paragraphs (b)(1) through (b)(3).

R3-2 R4 R5

(i) In the districts indicated, except R4A, R4B, R4-1, R5A, R5B and R5D Districts, as an alternative to the provisions set forth in paragraph (b) and (d) of this Section for #developments# or #enlargements# where at least 20 percent of the #floor area# of the #zoning lot# is allocated to #affordable independent residences for seniors#, the following provisions may be applied: Within 25 feet of a #street line#, no portion of the #building or other structure# shall exceed a height of 45 feet, and beyond 25 feet of a #street line#, no portion of a #building or other #structure# shall exceed a height of 65 feet or six stories, whichever is less.

(j) In the districts indicated, except R4A, R4B, R4-1, R5A, R5B and R5D Districts, the City Planning Commission may authorize a #building or other structure# that penetrates the height and setback regulations set forth in paragraphs (b), ~~and~~ (d) or (i) of this Section, except for #buildings# utilizing the optional regulations for #predominantly built-up areas#. As a condition for granting such authorizations, the Commission shall find that:

(1) by concentrating permitted #floor area# in a #building# or #buildings# of greater height the preservation of an existing #building#, topography, vegetation, or view corridors having environmental, historic or aesthetic value to the public will be assured, and that such preservation would not be possible by careful siting of lower #buildings# containing the same permitted #floor area#; ~~or, for #non-profit residences for the elderly#, the additional #floor area# permitted is accommodated in an efficient manner;~~

(2) such modification is the least modification required to achieve the purpose for which it is granted;

* * *

**23-632**
**~~Front setbacks in districts where front yards are not required~~ Required side and rear setbacks**

Side and rear setbacks shall be provided as specified in this Section. Permitted obstructions in required side and rear setbacks are set forth in paragraph (a) of this Section. Required side and rear setbacks for tall buildings in certain R1 through R5 Districts are set forth in paragraph (b) and required side and rear setbacks for #buildings# containing non-#residential uses# in certain R1 through R5 Districts are set forth in paragraph (c) of this Section.

(a) Permitted Obstructions in required side and rear setbacks

Unenclosed balconies, subject to the provisions of Section 23-13 (Balconies), are permitted to project into or over any open areas required by the provisions of this Section. In addition, awnings and other sun control devices, decks, exterior wall thickness, parapet walls not more than four feet in height, roof thickness, solar energy systems up to four feet high, vegetated roofs, and weirs, are permitted as set forth in Section 23-62 (Permitted Obstructions). Chimneys or flues shall also be permitted, provided that the total width does not exceed 10 percent of the width of the #building's# walls facing such open area.

(b) Required side and rear setbacks for tall buildings in certain low bulk districts

R1 R2 R3 R4 R5

In R1 and R2 Districts, any portion of a #building or other structure# bounding a #side yard# or a #rear yard# which is more than 30 feet above the mean level of adjacent natural grade shall be set back from such #side yard# line or #rear yard line# for a distance equal to one-half the height of that portion of the #building or other structure# which is higher than 30 feet above the mean level of adjacent natural grade.

In R3, R4 and R5 Districts, except R5A and R5D Districts, any portion of a #building or other structure# bounding a #side yard# or a #rear yard# which is more than 33 feet above the level of the #base plane# shall be set back from such #side yard# line or such #rear yard line# for a distance equal to one-half the height of that portion of the #building or other structure# which is higher than 33 feet above the level of the #base plane# (see illustration of Side Yard Setback). However, the following modifications may be applied to #buildings# containing #affordable independent residences for seniors#: no #rear yard# setback need be provided; and for a #side yard#, the resultant setback required by the calculation above need not exceed a depth of ten feet, as measured from the #building# wall fronting such #side yard#.

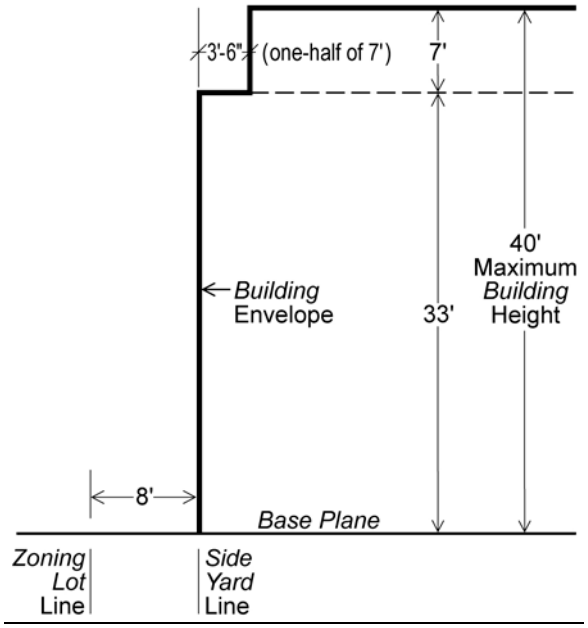


Side Yard Setback

(R5 example)

(c) Required side and rear setbacks for permitted non-residential uses in low bulk districts

R1 R2 R3 R4 R5

In the districts indicated, except R5D Districts, no portion of any #building# used for permitted non-#residential uses# which is more than 30 feet or more than three #stories#, whichever is less, above the level of a #side yard# or #rear yard#, shall be nearer to a #side lot line# or #rear lot line# bounding such #yard# than a distance equal to the height above yard level of such portion of the #building#.

~~R6 R7 R8 R9 R10~~

~~(a) In the districts indicated, except for #Quality Housing buildings#, and except as set forth in paragraph (b) of this Section, if the front wall or other portion of a #building or other structure# is located at the #street line# or within the #initial setback distance# set forth in the following table, the height of such front wall or other portion of a #building or other structure# shall not exceed the maximum height above #curb level# set forth in the following table. Above such specified maximum height and beyond the #initial setback distance#, the #building or other structure# shall not penetrate the #sky exposure plane# set forth in the following table:~~

~~MAXIMUM HEIGHT OF FRONT WALL AND REQUIRED FRONT SETBACKS~~

| ~~#Initial Setback Distance# (in feet)~~ | | ~~Maximum Height of a Front Wall or other portion of a #Building or other structure#within the #Initial Setback Distance#~~ | ~~#Sky Exposure Plane#~~ | | | | |
|---|---|---|---|---|---|---|---|
| | | | | ~~Slope over #Zoning Lot# (expressed as a ratio of vertical distance to horizontal distance)~~ | | | |
| | | | | ~~On #Narrow Street#~~ | | | ~~On #Wide Street#~~ |
| ~~On #Narrow Street#~~ | ~~On #Wide Street#~~ | | ~~Height above #Street Line# (in feet)~~ | ~~Vertical Distance~~ | ~~Horizontal Distance~~ | ~~Vertical Distance~~ | ~~Horizontal Distance~~ |
| ~~R6 or R7 Districts~~ | | | | | | | |
| ~~20~~ | ~~15~~ | ~~60 feet or six #stories#, whichever is less~~ | ~~60~~ | ~~2.7~~ | ~~to 1~~ | ~~5.6~~ | ~~to 1~~ |
| ~~R8 R9 or R10 Districts~~ | | | | | | | |
| ~~20~~ | ~~15~~ | ~~85 feet or nine #stories#, whichever is less~~ | ~~85~~ | ~~2.7~~ | ~~to 1~~ | ~~5.6~~ | ~~to 1~~ |

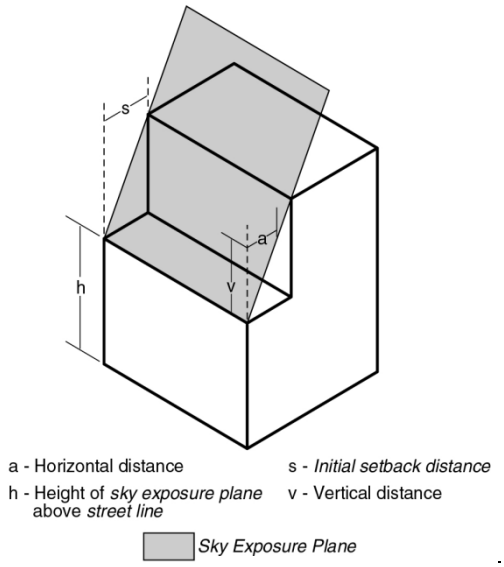


~~SKY EXPOSURE PLANE~~
~~R6 R7 R8 R9 R10 Districts~~

~~R6A R6B R7A R7B R7D R7X R8A R8B R8X R9A R9D R9X R10A R10X~~

~~(b) In the districts indicated, for all #buildings or other structures#, and for #Quality Housing buildings# in other R6, R7, R8, R9 or R10 Districts, the provisions of this Section and Sections 23-64 (Alternate Front Setbacks) and 23-65 (Tower Regulations) shall be inapplicable. In lieu thereof, the provisions of Section 23-633 (Street wall location and height and setback regulations in certain districts) shall apply.~~

**~~23-633~~**
**~~Street wall location and height and setback regulations in certain districts~~**

~~R6A R6B R7A R7B R7D R7X R8A R8B R8X R9A R9D R9X R10A R10X~~

~~In the districts indicated, #street wall# location and height and setback regulations are set forth in this Section. The height of all #buildings or other structures# shall be measured from the #base plane#. The provisions of Sections 23-64 (Alternate Front Setbacks) and 23-65 (Tower Regulations) shall not apply, except as otherwise set forth for #buildings# in R9D and R10X Districts.~~

~~(a) #Street wall# location~~

~~R6A R7A R7D R7X R9D~~

~~(1) In the districts indicated, for all #buildings#, and for #Quality Housing buildings# on #wide streets# in R6 or R7 Districts without a letter suffix, the #street wall# shall be located no closer to the #street line# than the closest #street wall# of an existing #building# to such #street line#, located on the same #block#, and within 150 feet of such #building#. However, a #street wall# need not be located further from the #street line# than 15 feet. On #corner lots#, these #street wall# location provisions shall apply along only one #street line#.~~

~~R6B R7B R8B~~

~~(2) In the districts indicated, for all #buildings#, and for #Quality Housing buildings# on #narrow streets# in R6 and R7 Districts without a letter suffix, the #street wall# of a #building# on a #zoning lot# with at least 50 feet of frontage along a #street line# shall be located no closer to the #street line# than the #street wall# of an adjacent existing #building#. On #zoning lots# with less than 50 feet of frontage along a #street line#, the #street wall# shall be located no closer to nor further from the #street line# than the #street wall# of an adjacent existing #building#. For all #zoning lots#, the #street wall# need not be located further from a #street line# than 15 feet. On #corner lots#, the #street wall# along one #street line# need not be located further from the #street line# than five feet.~~

~~R8A R8X R9A R9X R10A R10X~~

~~(3) In the districts indicated, for all #buildings#, and for #Quality Housing buildings# in R8 or R9 Districts without a letter suffix, and in other R10 Districts, the following #street wall# location provisions shall apply along #wide streets# and along #narrow streets# within 50 feet of their intersection with a #wide street#:~~

~~(i) the #street wall# shall extend along the entire #street# frontage of a #zoning lot#;~~

~~(ii) at least 70 percent of the #aggregate width of street walls# shall be located within eight feet of the #street line# and extend to at least the minimum base height specified in the table in this Section or the height of the #building#, whichever is less. The remaining 30 percent of the #aggregate width of street walls# may be recessed beyond eight feet of the #street line# provided any such recesses deeper than 10 feet along a #wide street# or 15 feet along a #narrow street# are located within an #outer court#; and~~

~~(iii) the #street wall# location provisions of paragraph (a)(3) of this Section, inclusive, shall not apply to houses of worship.~~

~~No #street wall# location provisions shall apply along any #narrow street# beyond 50 feet of their intersection with a #wide street#.~~

~~For the purposes of applying the provisions of paragraph (a) of this Section, where the Administrative Code establishes restrictions on the location of #buildings# on lots fronting upon and within 30 feet of~~

~~Eastern Parkway in Community Districts 8 and 9 in the Borough of Brooklyn, lines drawn 30 feet north of and 30 feet south of, and parallel to, Eastern Parkway shall be considered the northern and southern #street lines# of Eastern Parkway.~~

~~R6A R6B R7A R7B R7D R7X R8A R8B R8X R9A R9D R9X R10A R10X~~

~~(b) Setback regulations~~

~~In the districts indicated, for all #buildings or other structures#, and for #Quality Housing buildings# in other R6, R7, R8, R9 and R10 Districts, setbacks are required for all portions of #buildings or other structures# that exceed the maximum base height specified in the table in this Section. Such setbacks shall be provided in accordance with the following regulations:~~

~~(1) At a height not lower than the minimum base height or higher than the maximum base height specified in the table in this Section, a setback with a depth of at least 10 feet shall be provided from any #street wall# fronting on a #wide street#, and a setback with a depth of at least 15 feet shall be provided from any #street wall# fronting on a #narrow street#, except such dimensions may include the depth of any permitted recesses in the #street wall#.~~

~~(2) On #narrow streets#, where a #street wall# is required to be located further than 10 feet from a #street line# in accordance with paragraph (a) of this Section, the depth of the required setback above the minimum base height may be reduced one foot for every foot that the #street wall# is required to be located beyond 10 feet of the #street line#, but in no event shall a setback less than 10 feet in depth be provided above the minimum base height.~~

~~(3) These setback provisions are optional for any #building# wall that is either located beyond 50 feet of a #street line# or oriented so that lines drawn perpendicular to it, in plan, would intersect a #street line# at an angle of 65 degrees or less. In the case of an irregular #street line#, the line connecting the most extreme points of intersection shall be deemed to be the #street line#. Furthermore, dormers provided in accordance with the provisions of Section 23-621 may penetrate a required setback area.~~

~~(4) In R9D Districts, for #buildings or other structures# on #zoning lots# that front upon an elevated rail line, at a height between grade level and 25 feet, a setback with a depth of at least 20 feet shall be provided from the #street line# fronting on such elevated rail line. The depth of such setback may be reduced by one foot for every foot that the depth of the #zoning lot#, measured perpendicular to the elevated rail line, is less than 110 feet, but in no event shall a setback less than 10 feet in depth be provided.~~

~~(c) Maximum #building# height~~

~~No #building or other structure# shall exceed the maximum #building# height specified in the table in this Section, except as otherwise provided below:~~

~~R9D R10X~~

~~In the districts indicated, any #building or other structure#, or portions thereof, which in the aggregate occupies not more than 40 percent of the #lot area# of a #zoning lot# (or, for #zoning lots# of less than 20,000 square feet, the percentage set forth in the table in Section 23-651), above a height of 85 feet above the #base plane#, is hereinafter referred to as a tower. Dormers permitted within a required setback area pursuant to Section 23-621 (Permitted obstructions in certain districts) shall not be included in tower coverage. Such tower or towers may exceed a height limit of 85 feet above the #base plane# provided:~~

~~(1) at all levels, such tower is set back from the #street wall# of a base at least 15 feet along a #narrow street# and at least 10 feet along a #wide street#, except such dimensions may include the depth of any permitted recesses in the #street wall#;~~

~~(2) the base of such tower complies with the #street wall# location provisions of paragraph (a) of this Section and the setback provisions of paragraph (b) of this Section; and~~

~~(3) the minimum coverage of such tower above a height of 85 feet above the #base plane# is at least 33 percent of the #lot area# of the #zoning lot#; however, such minimum coverage requirement shall not apply to the highest 40 feet of such tower.~~

~~(4) In R9D Districts, the highest four #stories#, or as many #stories# as are located entirely above a height of 165 feet, whichever is less, shall have a #lot coverage# of at least 50 percent of the #story# immediately below such #stories#, and a maximum #lot coverage# of 80 percent of the #story# immediately below such #stories#. Such reduced #lot coverage# shall be achieved by one or more setbacks on each face of the tower, where at least one setback on each tower face has a depth of at least four feet, and a width that, individually or in the aggregate, is equal to at least 10 percent of the width of such respective tower face. For the purposes of this paragraph, (c)(4), each tower shall have four tower faces, with each face being the side of a rectangle within which the outermost walls of the highest #story# not subject to the reduced #lot coverage# provisions have been inscribed. The required setbacks shall be measured from the outermost walls of the #building# facing each tower face. Required setback areas may overlap.~~

~~(5) In R9D Districts, for towers fronting on elevated rail lines, the outermost walls of each #story# located entirely above a height of 85 feet shall be inscribed within a rectangle. The maximum length of any side of such rectangle that is parallel or within 45 degrees of being parallel to such elevated rail line shall be 125 feet, or 75 percent of the frontage of the #zoning lot# along such elevated rail line, whichever is less.~~

~~R6A R6B R7A R7B R7D R7X R8A R8B R8X R9A R9D R9X R10A R10X~~

~~(d) Additional regulations~~

~~In the districts indicated, for all #buildings#, and for #Quality Housing buildings# in other R6, R7, R8, R9 and R10 Districts, the following additional regulations shall apply:~~

~~(1) Existing #buildings# may be vertically #enlarged# by up to one #story# or 15 feet without regard to the #street wall# location requirements of paragraph (a) of this Section.~~

~~(2) On #through lots# which extend less than 180 feet in maximum depth from #street# to #street#, the #street wall# location requirements of paragraph (a) of this Section shall be mandatory along only one #street# frontage.~~

~~(3) The #street wall# location and minimum base height provisions of paragraph (a) of this Section shall not apply along any #street# frontage of a #zoning lot# occupied by #buildings# whose #street wall# heights or widths will remain unaltered.~~

~~(4) The minimum base height provisions of paragraph (a) of this Section shall not apply to #buildings developed# or #enlarged# after February 2, 2011, that do not exceed such minimum base heights, except where such #buildings# are located on #zoning lots# with multiple #buildings#, one or more of which is #developed#, #enlarged# or altered after February 2, 2011, to a height exceeding such minimum base heights.~~

~~(5) The City Planning Commission may, upon application, authorize modifications in the required #street wall# location if the Commission finds that existing #buildings#, or existing open areas serving existing #buildings# to remain on the #zoning lot#, would be adversely affected by the location of the #street walls# in the manner prescribed in this Section.~~

~~(6) For any #zoning lot# located in a Historic District designated by the Landmarks Preservation Commission, the minimum base height and #street wall# location regulations of this Section, or as modified in any applicable Special District, shall be modified as follows:~~

~~(i) The minimum base height of a #street wall# may vary between the height of the #street wall# of an adjacent #building# before setback, if such height is lower than the minimum base height required, up to the minimum base height requirements of this Section, or as modified in any applicable Special District.~~

~~(ii) The maximum base height of a #street wall# may vary between the height of the #street wall# of an adjacent #building# before setback, if such height is higher than the maximum base height allowed, and the maximum base height requirements of this Section, provided that such height not exceed 150 feet and provided such #zoning lot# is located within the area bounded by West 22nd Street, a line 100 feet west of Fifth Avenue, a line midway between West 16th Street and West 17th Street, and a line 100 feet east of Sixth Avenue.~~

~~(iii) The location of the #street wall# of any #building# may vary between the #street wall# location requirements of this Section, or as modified in any applicable Special District, and the location of the #street wall# of an adjacent #building# fronting on the same #street line#.~~

~~(7) In R9D Districts, where a #building# on an adjacent #zoning lot# has #dwelling unit# windows located within 30 feet of a #side lot line# of the #development# or #enlargement#, an open area extending along the entire length of such #side lot line# with a minimum width of 15 feet shall be provided. Such open area may be obstructed only by the permitted obstructions set forth in Section 23-44 (Permitted Obstructions in Required Yards or Rear Yard Equivalents).~~

~~MINIMUM BASE HEIGHT, MAXIMUM BASE HEIGHT AND MAXIMUM BUILDING HEIGHT~~

| ~~District~~[5] | ~~Minimum Base Height~~ | ~~Maximum Base Height~~ | ~~Maximum #Building or other Structure# Height~~ |
|---|---|---|---|
| ~~R6B~~ | ~~30~~ | ~~40~~ | ~~50~~ |
| ~~R6~~[2] | ~~30~~ | ~~45~~ | ~~55~~ |
| ~~R6~~[1] ~~inside #Manhattan Core#~~ | ~~40~~ | ~~55~~ | ~~65~~ |
| ~~R6~~[1] ~~outside #Manhattan Core# R6A~~ | ~~40~~ | ~~60~~ | ~~70~~ |
| ~~R7~~[1] ~~inside #Manhattan Core# R7~~[2] ~~R7B~~ | ~~40~~ | ~~60~~ | ~~75~~ |
| ~~R7~~[1] ~~outside #Manhattan Core# R7A~~ | ~~40~~ | ~~65~~ | ~~80~~ |
| ~~R7D~~ | ~~60~~ | ~~85~~ | ~~100~~ |
| ~~R7X~~ | ~~60~~ | ~~85~~ | ~~125~~ |
| ~~R8B~~ | ~~55~~ | ~~60~~ | ~~75~~ |
| ~~R8~~[2] | ~~60~~ | ~~80~~ | ~~105~~ |
| ~~R8~~[1] ~~R8A~~ | ~~60~~ | ~~85~~ | ~~120~~ |
| ~~R8X~~ | ~~60~~ | ~~85~~ | ~~150~~ |

| | | | |
|---|---|---|---|
| ~~R9[2] R9A[2]~~ | ~~60~~ | ~~95~~ | ~~135~~ |
| ~~R9A R9[1]~~ | ~~60~~ | ~~102~~ | ~~145~~ |
| ~~R9D~~ | ~~60~~ | ~~85[4]~~ | ~~—[3]~~ |
| ~~R9X[2]~~ | ~~60~~ | ~~120~~ | ~~160~~ |
| ~~R9X[1]~~ | ~~105~~ | ~~120~~ | ~~170~~ |
| ~~R10[2] R10A[2]~~ | ~~60~~ | ~~125~~ | ~~185~~ |
| ~~R10[1] R10A[1]~~ | ~~125~~ | ~~150~~ | ~~210~~ |
| ~~R10X~~ | ~~60~~ | ~~85~~ | ~~—[3]~~ |

~~[1] For #zoning lots# or portions thereof within 100 feet of a #wide street#~~

~~[2] For #zoning lots# on a #narrow street# except portions of such #zoning lots# within a distance of 100 feet from an intersection with a #wide street# and, for #zoning lots# with only #wide street# frontage, portions of such #zoning lot# beyond 100 feet of the #street line#~~

~~[3] #Buildings or other structures# may exceed a maximum base height of 85 feet in accordance with paragraph (c) of this Section~~

~~[4] For #buildings or other structures# that front upon an elevated rail line, the maximum base height shall be 25 feet~~

~~[5] Where the New York City Administrative Code establishes restrictions on the location of #buildings# on lots fronting upon and within 30 feet of Eastern Parkway in Community Districts 8 and 9 in the Borough of Brooklyn, lines drawn 30 feet north of and 30 feet south of, and parallel to, Eastern Parkway shall be considered the northern and southern #street lines# of Eastern Parkway.~~

**~~23-634~~**
**~~Special height and setback regulations in R10 Districts within Community District 7, Borough of Manhattan~~**

~~Within the boundaries of Community District 7 in the Borough of Manhattan, all #buildings or other structures# located in R10 Districts, except R10A or R10X Districts, shall comply with the requirements of this Section.~~

~~The front #building# wall of all #buildings# on a #zoning lot# with any frontage on a #wide street#, shall extend along the entire #wide street# frontage of the #zoning lot# without a setback for a height of 125 feet above the #curb level# or the full height of the #building#, whichever is less. Above a height of 125 feet, the front #building# wall may be set back at least 10 feet on a #wide street# or 15 feet on a #narrow street#. Above a height of 150 feet, the front #building# wall shall be set back at least 10 feet. These mandatory front #building# wall requirements also apply to all #buildings# along all #street lines# of #narrow streets# within 50 feet of their intersection with the #street lines# of #wide streets#. For the next 20 feet along the #street line# of a #narrow street#, the mandatory front #building# wall requirements are optional. The height and setback regulations of the underlying district shall apply along #street lines#, or portions thereof, not subject to the front #building# wall requirements.~~

~~Front wall recesses are permitted above the level of the second #story# ceiling or 23 feet above #curb level#, whichever is less, provided that the aggregate width of all recesses at the level of any #story# does not exceed 50 percent of the width of the front wall. The depth of such recess shall not exceed 10 feet. No front wall recesses are permitted within 20 feet of the intersection of two #street lines#.~~

~~Front wall openings are permitted below the level of the second #story# ceiling, for entrances only.~~

~~The preceding #street wall# location provisions shall not apply along any #street# frontage of a #zoning lot# occupied by existing #buildings# whose #street walls# remain unaffected by alterations or #enlargements# to such existing #buildings#.~~

~~However, the provisions of this Section shall not apply to any #building# for which the City Planning Commission has granted a special permit pursuant to Section 74-95 (Housing Quality) nor shall it apply to any #building# located within the #Special Lincoln Square District# or within the former West Side Urban Renewal Area excluding frontages along Central Park West or to the #block# bounded by Frederick Douglass Circle, Cathedral Parkway, Manhattan Avenue, West 109th Street and Central Park West. On application, the City Planning Commission may grant special authorization for minor modifications of the mandatory front wall provisions of this Section involving an #enlargement#, upon a showing of compelling necessity. Such authorization, however, may in no event include modification of permitted #floor area# regulations.~~

**~~23-635~~**
**~~Special bulk regulations for certain sites in Community District 4, Borough of Manhattan~~**

~~Within the boundaries of Community District 4 in the Borough of Manhattan, excluding the #Special Clinton District#, for #developments# or #enlargements# in R8 Districts without a letter suffix, on #zoning lots# larger than 1.5 acres that include #residences# for which #public funding#, as defined in Section 23-911 (General definitions) is committed to be provided, the City Planning Commission may authorize modifications of height and setback regulations, provided the Commission finds that such modifications will facilitate the provision of such #residences#, and such modifications will not unduly obstruct access of light and air to the detriment of the occupants or users of #buildings# on the #zoning lot# or nearby properties, #open space# or #streets#. Prior to issuing a building permit for any #development# or #enlargement# utilizing modifications granted by this~~

~~authorization, the Department of Buildings shall be furnished with written notice of a commitment from the appropriate funding agency for the provision of such #public funding#.~~

~~The Commission may prescribe appropriate conditions and safeguards to minimize adverse effects on the character of the surrounding area.~~

**~~23-636~~**
**~~Special height and setback regulations for certain sites in Community District 9, Borough of Manhattan~~**

~~Within the boundaries of Community District 9 in the Borough of Manhattan, all #buildings# located in R8 Districts north of West 125th Street shall be #developed# or #enlarged# pursuant to the Quality Housing Program.~~

**23-64**
**~~Alternate Front Setbacks~~ Basic Height and Setback Requirements**
R6 R7 R8 R9 R10

In the districts indicated without a letter suffix, for #buildings# other than #Quality Housing buildings#, the height and setback of a #building or other structure# shall be as set forth in Section 23-641 (Front setbacks), or 23-642 (Alternate front setbacks). In R9 and R10 districts, towers are permitted in accordance with the provisions of Section 23-65.

~~R6 R7 R8 R9 R10~~

~~(a) In the districts indicated, except for #Quality Housing buildings#, and except as set forth in paragraph (b) of this Section, if an open area is provided along the full length of the #front lot line# with the minimum depth set forth in the following table, the provisions of Section 23-63 (Maximum Height of Front Wall and Required Front Setbacks) shall not apply. The minimum depth of such an open area shall be measured perpendicular to the #front lot line#. However, in such instances, except as otherwise provided in Sections 23-62 (Permitted Obstructions) or 23-65 (Tower Regulations), no #building or other structure# shall penetrate the alternate #sky exposure plane# set forth in the following table, and the #sky exposure plane# shall be measured from a point above the #street line#.~~

~~In R9 or R10 Districts, the provisions of this Section shall be inapplicable to any #development# or #enlargement# with more than 25 percent of the total #floor area# of the #building# in #residential use#.~~

~~ALTERNATE REQUIRED FRONT SETBACKS~~

~~Alternate #Sky Exposure Plane#~~

| ~~Depth of Optional Front Open Area (in feet)~~ | | ~~Height above #Street Line# (in feet)~~ | ~~Slope over #Zoning Lot# (expressed as a ratio of vertical distance to horizontal distance)~~ | | | |
|---|---|---|---|---|---|---|
| | | | ~~On #Narrow Street#~~ | | ~~On #Wide Street#~~ | |
| ~~On #Narrow Street#~~ | ~~On #Wide Street#~~ | | ~~Vertical Distance~~ | ~~Hori-zontal Distance~~ | ~~Vertical Distance~~ | ~~Hori-zontal Distance~~ |
| ~~R6 or R7 Districts~~ | | | | | | |
| ~~15~~ | ~~10~~ | ~~60~~ | ~~3.7~~ | ~~to 1~~ | ~~7.6~~ | ~~to 1~~ |
| ~~R8 R9 R10 Districts~~ | | | | | | |
| ~~15~~ | ~~10~~ | ~~85~~ | ~~3.7~~ | ~~to 1~~ | ~~7.6~~ | ~~to 1~~ |

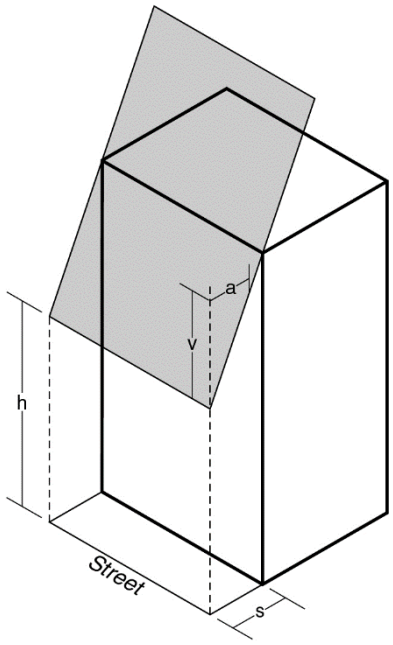


a - Horizontal distance
h - Height of *sky exposure plane* above *street line*
s - Depth of the optional front open area
v - Vertical distance
*Sky Exposure Plane*

~~ALTERNATE SKY EXPOSURE PLANE~~
~~R6 R7 R8 R9 R10 Districts~~

~~R6A R6B R7A R7B R7D R7X R8A R8B R8X R9A R9D R9X R10A R10X~~

~~(b) In the districts indicated, for all #buildings or other structures#, the provisions of this Section shall be inapplicable.~~

**23-641**
**Front setbacks**
R6 R7 R8 R9 R10

In the districts indicated without a letter suffix, if the front wall or other portion of a #building or other structure# is located at the #street line# or within the #initial setback distance# set forth in the following table, the height of such front wall or other portion of a #building or other structure# shall not exceed the maximum height above the #street line# set forth in the following table. Above such specified maximum height and beyond the #initial setback distance#, the #building or other structure# shall not penetrate the #sky exposure plane# set forth in the following table , except as otherwise provided in Section 23-62 (Permitted Obstructions) or 23-65 (Tower Regulations).

MAXIMUM HEIGHT OF FRONT WALL AND REQUIRED FRONT SETBACKS

| #Initial Setback Distance# (in feet) | | Maximum Height of a Front Wall or other portion of a #Building or other structure# within the #Initial Setback Distance# | Height above #Street Line# (in feet) | #Sky Exposure Plane# Slope over #Zoning Lot# (expressed as a ratio of vertical distance to horizontal distance) | | | |
|---|---|---|---|---|---|---|---|
| | | | | On #Narrow Street# | | On #Wide Street# | |
| On #Narrow Street# | On #Wide Street# | | | Vertical Distance | Horizontal Distance | Vertical Distance | Horizontal Distance |
| R6 or R7 Districts | | | | | | | |
| 20 | 15 | 60 feet or six #stories#, whichever is less | 60 | 2.7 | to 1 | 5.6 | to 1 |
| R8 R9 or R10 Districts | | | | | | | |

| | | | | | | | |
|---|---|---|---|---|---|---|---|
| 20 | 15 | 85 feet or nine #stories#, whichever is less | 85 | 2.7 to 1 | | 5.6 to 1 | |

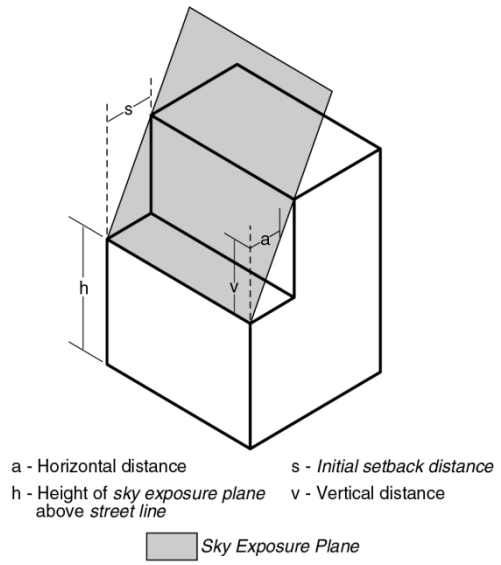


SKY EXPOSURE PLANE
R6 R7 R8 R9 R10 Districts

**23-642**
**Alternate Front Setbacks**

R6 R7 R8 R9 R10

In the districts indicated without a letter suffix, if an open area is provided along the entire length of the #front lot line# with the minimum depth set forth in the following table, the provisions of this Section may apply in lieu of the provisions of Section 23-641 (Front Setbacks). The #building or other structure# shall not penetrate the #sky exposure plane# set forth in the following table, except as otherwise provided in Section 23-62 (Permitted Obstructions) or 23-65 (Tower Regulations).

In R9 or R10 Districts, the provisions of this Section shall be inapplicable to any #development# or #enlargement# with more than 25 percent of the total #floor area# of the #building# in #residential use#.

ALTERNATE REQUIRED FRONT SETBACKS

| Depth of Optional Front Open Area (in feet, measured perpendicular to #street line#) | | Height above #Street Line# (in feet) | Alternate #Sky Exposure Plane# — Slope over #Zoning Lot# (expressed as a ratio of vertical distance to horizontal distance) | | | |
|---|---|---|---|---|---|---|
| | | | On #Narrow Street# | | On #Wide Street# | |
| On #Narrow Street# | On #Wide Street# | | Vertical Distance | Horizontal Distance | Vertical Distance | Horizontal Distance |
| R6 or R7 Districts | | | | | | |
| 15 | 10 | 60 | 3.7 | to 1 | 7.6 | to 1 |
| R8 R9 R10 Districts | | | | | | |
| 15 | 10 | 85 | 3.7 | to 1 | 7.6 | to 1 |

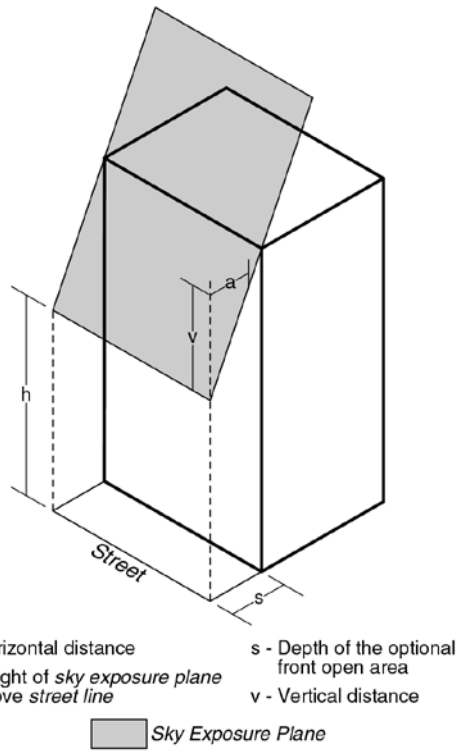

ALTERNATE SKY EXPOSURE PLANE
R6 R7 R8 R9 R10 Districts

Supplementary Regulations

**23-65**
**Tower Regulations**
R9 R10

In the districts indicated without a letter suffix, except for #Quality Housing buildings#, and except as set forth in paragraph (c) of this Section, any portion or portions of #buildings# which in the aggregate occupy not more than 40 percent of the #lot area# of a #zoning lot#, or for #zoning lots# of less than 20,000 square feet, the percentage set forth in the table below, may penetrate an established #sky exposure plane# in accordance with the provisions of this Section. Such portions of #buildings# that penetrate a #sky exposure plane# are hereinafter referred to as towers.

* * *

(a) Applicability of tower-on-a-base regulations

* * *

(c) Inapplicability of tower regulations

The provisions of this Section 23-65 shall not apply to any #building# located wholly or partly in a #Residence District#, that is within 100 feet of a #public park# with an area of one acre or more, or a #street line# opposite such #public park#.~~:~~

~~(1) located wholly or partly in a #Residence District#, that is within 100 feet of a #public park# with an area of one acre or more, or a #street line# opposite such a #public park#; or~~

~~(2) located in a R9A, R9X, R10A or R10X District.~~

**23-651**
**Tower-on-a-base**

Any #development# or #enlargement# that meets the location and #floor area# criteria of paragraph (a) of Section 23-65 and includes a tower shall be constructed as a tower-on-a-base, in accordance with the regulations set forth in this Section. The height of all #buildings or other structures# shall be measured from the #base plane#.

(a) Tower regulations

(1) At any level above a #building# base (referred to hereinafter as a "base"), any portion or portions of a #building# (referred to hereinafter as a "tower") shall occupy in the aggregate:

* * *

(2) Any tower located above a base shall not be subject to the provisions of Sections~~ 23-63 (Maximum Height of Walls and Required Setbacks)~~ 23-64 (Basic Height and Setback Requirements).

(3) At least 55 percent of the total #floor area# permitted on the #zoning lot# shall be located in #stories# located either partially or entirely below a height of 150 feet.

* * *

~~A tower proposed pursuant to Section 23-65 (Tower Regulations) that has been granted a special permit by the City Planning Commission prior to February 9, 1994, may be started or continued pursuant to that special permit.~~

* * *

**23-66**
~~**Required Side and Rear Setbacks**~~ **Height and Setback Requirements for Quality Housing Buildings**
~~R1 R2 R3 R4 R5~~ R6 R7 R8 R9 R10

In the districts indicated, the #street wall# location provisions of Sections 23-661 and the height and setback provisions of Section 23-662 shall apply to #Quality Housing buildings#. In certain districts, the heights set forth in Section 23-662 may be increased pursuant to either the provisions of Section 23-663 (Tower regulations in R9D and R10 Districts) or 23-664 (Modified height and setback regulations for certain buildings), as applicable. Additional provisions are set forth in Section 23-665.

~~In all districts, as indicated, side and rear setbacks shall be provided as specified in this Section. Unenclosed balconies, subject to the provisions of Section 23-13 (Balconies), are permitted to project into or over any open areas required by the provisions of this Section. In addition, awnings and other sun control devices, decks, exterior wall thickness, parapet walls, roof thickness, solar energy systems up to four feet high, vegetated roofs, and weirs, are permitted as set forth in Section 23-62 (Permitted Obstructions).~~

**23-661**
~~**Required side and rear setbacks for tall residential buildings in low bulk districts**~~ **Street wall location**
R6 R7 R8 R9 R10

In the districts indicated, the #street wall# location provisions of paragraphs (a), (b) or (c) of this Section shall apply to all #Quality Housing buildings#, as applicable. Additional articulation provisions are set forth in paragraph (d) of this Section.

R6A R7A R7D R7X R9D

(a) In the districts indicated, for all #buildings#, and for #Quality Housing buildings# on #wide streets# in R6 or R7 Districts without a letter suffix, the #street wall# shall be located no closer to the #street line# than the #street wall# of either adjacent existing #buildings#. Where an adjacent #building# has #street walls# located at varying depths from the #street line#, the #street wall# of the #development# or #enlargement# shall not be located closer to the #street line# than the furthest #street wall# portion of such adjacent #building# whose width comprises at least 25 percent of the #aggregate width of street wall#. However, a #street wall# need not be located farther than ten feet from the #street line#. On #corner lots#, these #street wall# location provisions shall apply along only one #street line#.

Any #street wall# may be divided into different segments, and located at varying depths from the #street line#, to allow for #building# recesses, projections, #outer courts# and other forms of articulation, provided that each portion complies with the #street wall# location provision of this paragraph (a).

Recesses and projections beyond the #street wall# locations established in this paragraph are permitted only in accordance with paragraph (d) of this Section.

R6B R7B R8B

(b) In the districts indicated, for all #buildings#, and for #Quality Housing buildings# on #narrow streets# in R6 and R7 Districts without a letter suffix, the #street wall# of a #building# on a #zoning lot# with at least 50 feet of frontage along a #street line# shall be located no closer to the #street line# than the #street wall# of either adjacent existing #buildings#. On #zoning lots# with less than 50 feet of frontage along a #street line#, the #street wall# shall be located neither closer to nor farther from the #street line# than the #street wall# of either adjacent existing #buildings#. In either case, where an adjacent #building# has #street walls# located at varying depths from the #street line#, the #street wall# of the #development# or #enlargement# shall not be located closer to the #street line# than the farthest #street wall# portion of such adjacent #building# whose width comprises at least 25 percent of the #aggregate width of street wall#. However, for all #zoning lots#, the #street wall# need not be located farther than 15 feet from a #street line#, and need not be closer than three feet to the #street line#. On #corner lots#, the #street wall# along one #street line# need not be located farther from the #street line# than five feet.

Any #street wall# may be divided into different segments, and located at varying depths from the #street line#, to allow for #building# recesses, projections, #outer courts# and other forms of articulation, provided that each portion complies with the #street wall# location provision of this paragraph (b).

Recesses and projections beyond the #street wall# locations established in this paragraph are permitted only in accordance with paragraph (d) of this Section.

R8A R8X R9A R9X R10A R10X

(c) In the districts indicated, for all #buildings#, and for #Quality Housing buildings# in R8 or R9 Districts without a letter suffix, and in other R10 Districts, the following #street wall# location provisions shall apply.

(1) Along #wide streets# and along #narrow streets# within 50 feet of their intersection with a #wide street# the #street wall# shall extend along the entire #street# frontage of a #zoning lot#. At least 70 percent of the #aggregate width of street walls# shall be located within eight feet of the #street line# and extend to at least the minimum base height specified in Section 23-662 (Maximum height of buildings and setback regulations), or the height of the #building#, whichever is less. Up to 30 percent of the #aggregate width of street walls# may be recessed beyond eight feet of the #street line#, provided that any such recesses deeper than 10 feet along a #wide street# or 15 feet along a #narrow street# are located within an #outer court#.

(2) Along #narrow streets# beyond 50 feet of their intersection with a #wide street#, the #street wall# provisions of paragraph (a) of this Section shall apply.

Any #street wall# may be divided into different segments, and located at varying depths from the #street line#, to allow for #building# recesses, projections, #outer courts# and other forms of articulation, provided that each portion complies with the #street wall# location provision of this paragraph (c).

Recesses and projections beyond the #street wall# locations established in this paragraph are permitted only in accordance with paragraph (d) of this Section.

R6 R7 R8 R9 R10

(d) #Street wall# articulation, including, but not limited to, window recesses and structural expression on the #building# facade, shall be permitted to project or recess beyond the #street wall# locations established in paragraphs (a), (b) or (c) of this Section, provided such articulation does not exceed a depth or projection of twelve inches, or extends beyond the #street line#. In addition, to accommodate other forms of #street wall# articulation, such as bay windows, and facade recesses, up to 50 percent of the #aggregate width of street wall#, at any level, may recess or project beyond such #street wall# location provisions of this Section, provided that no such recess or projection exceeds a depth of three feet, as measured perpendicular from the #street wall#, or portion thereof. No projection shall extend beyond the #street line#, except where encroachments into the public right-of-way are permitted by the New York City Administrative Code.

~~R1 R2 R5~~

~~In R1 and R2 Districts, any portion of a #building or other structure# bounding a #side yard# or a #rear yard# which is more than 30 feet above the mean level of adjacent natural grade shall be set back from such #side yard# line or #rear yard line# for a distance equal to one-half the height of that portion of the #building or other structure# which is higher than 30 feet above the mean level of adjacent natural grade.~~

~~In an R5 District, except R5A and R5D Districts, any portion of a #building or other structure# bounding a #side yard# or a #rear yard# which is more than 33 feet above the level of the #base plane# shall be set back from such~~

~~#side yard# line or such #rear yard line# for a distance equal to one-half the height of that portion of the #building or other structure# which is higher than 33 feet above the level of the #base plane# (see illustration of Side Yard Setback).~~

~~The following are permitted to project into any open area required under the provisions of this Section:~~

~~(a) parapet walls not more than four feet high; and~~

~~(b) chimneys or flues with a total width not exceeding 10 percent of the width of the #building's# walls facing such open area.~~

[REMOVE DIAGRAM]

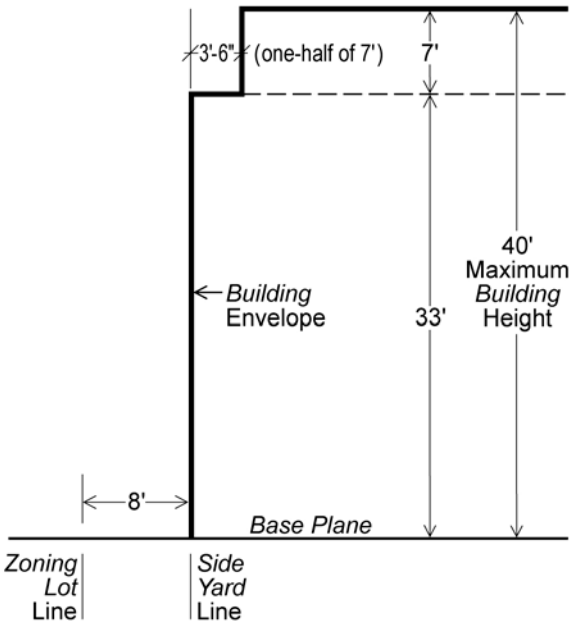


~~Side Yard Setback~~
~~(R5 example)~~

**23-662**
**~~Required side and rear setbacks for permitted non-residential uses in low bulk districts~~**
**Maximum height of buildings and setback regulations**

R6 R7 R8 R9 R10

In the districts indicated, height and setback regulations for #Quality Housing buildings# are set forth in this Section. Definitions applicable to Sections 23-66, and 35-65, inclusive, are set forth in paragraph (a) of this Section. The height of a #Quality Housing building or other structure# shall not exceed the maximum height limit specified for the applicable district in paragraph (b) of this Section, or the maximum number of permitted #stories#, whichever is less, except as further provided elsewhere in this Chapter. A setback is required for all

portions of #buildings or other structures# that exceed the maximum base height specified for the applicable district in paragraph (b), and shall be provided in accordance with paragraph (c) of this Section.

(a) Definitions

Excluded districts

For the purposes of Sections 23-66, and 35-65, inclusive, “excluded districts” shall refer to #developments# or #enlargements# of #Quality Housing buildings# within R7B, R8B, R9D or R10X Districts, or within R6 and R7 Districts located within the #Manhattan Core# or located on #narrow streets# beyond 100 feet of an intersection with a #wide street# outside the #Manhattan Core#.

Non-qualifying ground floor

For the purposes of Sections 23-66, and 35-65, inclusive, “non-qualifying ground floor” shall refer to a ground floor of a #development# or #enlargement# that does not meet the requirements for a #qualifying ground floor#.

Qualifying ground floor

For the purposes of Sections 23-66, and 35-65, inclusive, “qualifying ground floor” shall refer to the ground floor of a #development# or # enlargement#, on a #zoning lot#, or portion thereof, located within an R6 through R10 District, other than an #excluded district#, where the level of the finished floor of the second #story# above grade in a #Quality Housing building# is 13 feet or more above the level of the adjoining sidewalk.

(b) Building heights and permitted number of stories

For #developments# or #enlargements# of #Quality Housing buildings#, the minimum and maximum base height, maximum height of a #building or other structure#, and maximum number of #stories# permitted shall be as set forth in Table 1 below for the applicable zoning district. Separate maximum #building# heights are set forth within such Table for #developments# or #enlargements# with #qualifying ground floors# and for those with #non-qualifying ground floors#.

TABLE 1
MINIMUM BASE HEIGHT, MAXIMUM BASE HEIGHT,
MAXIMUM BUILDING HEIGHT AND MAXIMUM NUMBER OF STORIES

| FOR CONTEXTUAL DISTRICTS |
|---|

| District | Minimum Base Height | Maximum Base Height | Maximum Height of #Building or other Structures# with #non-qualifying ground floors# | Maximum Height of #Building or other Structures# with #qualifying ground floors# | Maximum Number of #Stories# |
|---|---|---|---|---|---|
| R6B | 30 | 45 | 50 | 55 | 5 |
| R6A | 40 | 65 | 70 | 75 | 7 |
| R7B | 40 | 65 | 75[5] | 75[5] | 7 |
| R7A | 40 | 75 | 80 | 85 | 8 |
| R7D | 60 | 85 | 100 | 105 | 10 |
| R7X | 60 | 95 | 120 | 125 | 12 |
| R8B | 55 | 65 | 75[5] | 75[5] | 7 |
| R8A | 60 | 105 | 120 | 125 | 12 |
| R8X | 60 | 95 | 150 | 155 | 15 |
| R9A[2] | 60 | 105 | 140 | 145 | 14 |
| R9A[1] | 60 | 105 | 150 | 155 | 15 |
| R9D | 60 | 85[4] | N/A[3] | N/A[3] | N/A |
| R9X[2] | 60 | 125 | 170 | 175 | 17 |
| R9X[1] | 105 | 125 | 170 | 175 | 17 |
| R10A[2] | 60 | 135 | 190 | 195 | 19 |
| R10A[1] | 125 | 155 | 210 | 215 | 21 |
| R10X | 60 | 85 | N/A[3] | N/A[3] | N/A |

| FOR NON-CONTEXTUAL DISTRICTS | | | | | |
|---|---|---|---|---|---|
| District | Minimum Base Height | Maximum Base Height | Maximum Height for #Building or other Structures# with #non-qualifying ground floors# | Maximum Height for #Building or other Structures# with #qualifying ground floors# | Maximum Number of #Stories# |
| R6[2] | 30 | 45 | 55[5] | 55[5] | 5 |
| R6[1] inside #Manhattan Core# | 40 | 55 | 65[5] | 65[5] | 6 |
| R6[1] outside #Manhattan Core# | 40 | 65 | 70 | 75 | 7 |
| R7[1] inside #Manhattan Core# R7[2] | 40 | 65 | 75[5] | 75[5] | 7 |
| R7[1] outside #Manhattan Core# | 40 | 75 | 80 | 85 | 8 |
| R8[2] R8[1] inside #Manhattan Core# | 60 | 95 | 120 | 125 | 12 |
| R8[1] outside #Manhattan Core# | 60 | 95 | 140 | 145 | 14 |
| R9[2] | 60 | 105 | 140 | 145 | 14 |
| R9[1] | 60 | 105 | 150 | 155 | 15 |
| R10[2] | 60 | 135 | 190 | 195 | 19 |
| R10[1] | 125 | 155 | 210 | 215 | 21 |

[1] For #zoning lots# or portions thereof within 100 feet of a #wide street#

[2] For #zoning lots# on a #narrow street# except portions of such #zoning lots# within a distance of 100 feet from an intersection with a #wide street# and, for #zoning lots# with only #wide street# frontage, portions of such #zoning lot# beyond 100 feet of the #street line#

[3] #Buildings or other structures# may exceed a maximum base height of 85 feet in accordance Section 23-663 (Tower regulations in R9D and R10X districts)

[4] For #buildings or other structures# that front upon an elevated rail line, the maximum base height shall be 25 feet

[5] For #zoning lots# in #excluded districts#, the maximum height of a #building or other structure# is the same for #developments# or #enlargements# with #qualifying ground floors# or #non-qualifying ground floors#.

(c) Setback requirements

For all #Quality Housing buildings#, a setback shall be provided in accordance with the following regulations:

(1) At a height not lower than the minimum base height or higher than the maximum base height specified for the applicable district in paragraph (b) of this Section, a setback with a depth of at least 10 feet shall be provided from any #street wall# fronting on a #wide street#, and a setback with a depth of at least 15 feet shall be provided from any #street wall# fronting on a #narrow street#.

(2) The depth of such required setback may be reduced one foot for every foot that the #street wall# is located beyond the #street line#, but in no event shall a setback of less than five feet in depth be provided, except as otherwise set forth in this Section. To allow #street wall# articulation, where a #street wall# is divided into different segments, and located at varying depths from the #street line#, such permitted setback reduction may be applied to each #street wall# portion separately.

(3) Notwithstanding the provisions of paragraph (c)(2) above, the depth of such setbacks may include the depth of recesses or #outer courts# in the #street wall# of the #building# base, provided that the aggregate width of any such recessed portion of a #street wall# with a setback less than five feet, as applicable, does not exceed 30 percent of the #aggregate width of street wall# at any level.

(4) These setback provisions are optional for any #building# wall that either is located beyond 50 feet of a #street line#, or oriented so that lines drawn perpendicular to it, in plan, would intersect a #street line# at an angle of 65 degrees or less. In the case of an irregular #street line#, the line connecting the most extreme points of intersection shall be deemed to be the #street line#. Furthermore, dormers provided in accordance with the provisions of Section 23-621 may penetrate a required setback area.

(5) In R9D Districts, for #buildings or other structures# on #zoning lots# that front upon an elevated rail line, at a height between grade level and 25 feet, a setback with a depth of at least 20 feet shall be provided from the #street line# fronting on such elevated rail line. The depth of such setback may be reduced by one foot for every foot that the depth of the #zoning lot#, measured perpendicular to the elevated rail line, is less than 110 feet, but in no event shall a setback less than 10 feet in depth be provided.

~~R1 R2 R3 R4 R5~~

~~In the districts indicated, except R5D Districts, no portion of any #building# used for permitted non #residential uses# which is more than 30 feet or more than three #stories#, whichever is less, above the level of a #side yard# or #rear yard#, shall be nearer to a #side lot line# or #rear lot line# bounding such #yard# than a distance equal to the height above yard level of such portion of the #building#.~~

~~The following are permitted to project into any open area required under the provisions of this Section:~~

~~(a) parapet walls not more than four feet high; and~~

~~(b) chimneys or flues with a total width not exceeding 10 percent of the width of the #building's# walls facing such open area.~~

**23-663**

~~**Required rear setbacks for tall buildings in other districts**~~ **Tower regulations in R9D and R10X Districts**

R9D R10X

In the districts indicated, any #Quality Housing building or other structure#, or portions thereof, which in the aggregate occupies not more than 40 percent of the #lot area# of a #zoning lot# (or, for #zoning lots# of less than 20,000 square feet, the percentage set forth in the table in Section 23-651), above a height of 85 feet above the #base plane#, is hereinafter referred to as a tower. Dormers permitted within a required setback area pursuant to Section 23-621 (Permitted obstructions in certain districts) shall not be counted towards tower coverage. Such tower may exceed a height limit of 85 feet above the #base plane# provided the base of such tower complies with the applicable #street wall# location and height and setback provisions of Sections 23-661 and 23-662, respectively, and provided that the tower potion complies with the following, as applicable:

(a) at all levels, such tower shall be set back from the #street wall# of a base at least 15 feet along a #narrow street# and at least 10 feet along a #wide street#, except such dimensions may include the depth of any permitted recesses in the #street wall#;

(b) the minimum coverage of such tower above a height of 85 feet above the #base plane# is at least 33 percent of the #lot area# of the #zoning lot#; however, such minimum coverage requirement shall not apply to the highest 40 feet of such tower;

(c) In R9D Districts, the highest four #stories#, or as many #stories# as are located entirely above a height of 165 feet, whichever is less, shall have a #lot coverage# of between 50 percent and 80 percent of the #story# immediately below such #stories#. Such reduced #lot coverage# shall be achieved by one or more setbacks on each face of the tower, where at least one setback on each tower face has a depth of at least four feet, and a width that, individually or in the aggregate, is equal to at least 10 percent of the width of such respective tower face. For the purposes of this paragraph (d), each tower shall have four tower faces, with each face being the side of a rectangle within which the outermost walls of the highest #story# not subject to the reduced #lot coverage# provisions have been inscribed. The required setbacks shall be measured from the outermost walls of the #building#, perpendicular to each tower face. Required setback areas may overlap; and

(d) In R9D Districts, for towers fronting on elevated rail lines, the outermost walls of each #story# located entirely above a height of 85 feet shall be inscribed within a rectangle. The maximum length of any side of such rectangle that is parallel to, or within 45 degrees of being parallel to, such elevated rail line shall be 125 feet, or 75 percent of the frontage of the #zoning lot# along such elevated rail line, whichever is less.

~~R6 R7 R8 R9 R10~~

~~(a) In the districts indicated, except as provided in paragraph (b) of this Section, no portion of a #building or other structure# more than 125 feet above yard level shall be nearer to a #rear yard line# than 20 feet. However, this provision shall not apply to any portion of a #building# that qualifies as a tower under the provisions of Section 23-65 (Tower Regulations).~~

~~In the case of a #through lot# on which a #rear yard equivalent# is provided as set forth in paragraph (a) of Section 23-532, the requirements of this Section shall apply as if such #rear yard equivalent# were two adjoining #rear yards#. If a #rear yard equivalent# is provided as set forth in paragraphs (b) or (c) of Section 23-532, the requirements of this Section shall not apply.~~

[REMOVE IMAGE]

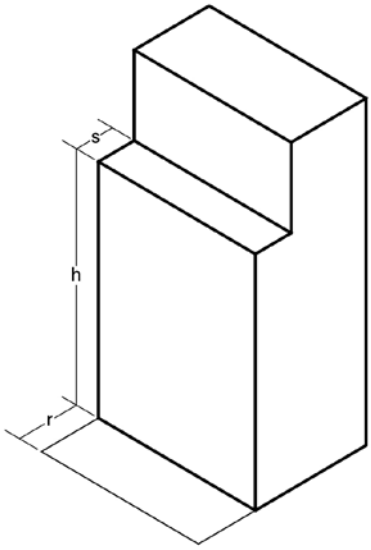


h - Height of wall above *rear yard*
r - Depth of required *rear yard*
s - Depth of required *rear yard* setback

~~REAR SETBACK~~

~~R6A R6B R7A R7B R7D R7X R8A R8B R8X R9A R9D R9X R10A R10X~~

~~(b) In the districts indicated, for all #buildings or other structures#, and for #Quality Housing buildings# in other R6 through R10 Districts, no portion of a #building or other structure# that exceeds the applicable maximum base height specified in Section 23-633 (Street wall location and height and setback regulations in certain districts) shall be nearer to a #rear yard line# than 10 feet.~~

~~In the case of a #through lot# on which a #rear yard equivalent# is provided as set forth in paragraph (a) of Section 23-532, the requirements of this Section shall apply as if such #rear yard equivalent# were two adjoining #rear yards#. If a #rear yard equivalent# is provided as set forth in paragraph (b) of Section 23-532, the requirements of this Section shall not apply.~~

**23-664**
**Modified height and setback regulations for certain buildings**
R6 R7 R8 R9 R10

In the districts indicated, for #development# or #enlargements# of #Quality Housing buildings# on #zoning lots# providing #affordable housing# pursuant to the Inclusionary Housing Program, as set forth in Section 23-90, inclusive, or for #developments# or #enlargements# where at least 20 percent of the #floor area# of the #zoning lot# contains #affordable independent residences for seniors#, the provisions of this Section shall apply.

(a) For certain #Quality Housing buildings# in all districts

For all such #developments# or #enlargements# of #Quality Housing buildings#, the maximum base and #building# heights, and maximum number of #stories# established in Section 23-662 shall be modified by Table 1 below. Separate maximum #building# heights are set forth within such Table for #developments# or #enlargements# with #qualifying ground floors# and for those with #non-qualifying ground floors#.

TABLE 1
MODIFIED MAXIMUM BASE HEIGHT
AND MAXIMUM BUILDING HEIGHT
FOR CERTAIN QUALITY HOUSING BUILDINGS

| FOR CONTEXTUAL DISTRICTS | | | | |
|---|---|---|---|---|
| District | Maximum Base Height | Maximum Height for #Building or other Structures# with #non-qualifying ground floors# | Maximum Height for #Building or other Structures# with #qualifying ground floors# | Maximum Number of #Stories# |
| R6A | 65 | 80 | 85 | 8 |
| R7A | 75 | 100 | 105 | 10 |
| R7D | 95 | 120 | 125 | 12 |
| R7X[1] | 105 | 140 | 145 | 14 |
| R8A | 105 | 140 | 145 | 14 |
| R8X | 105 | 170 | 175 | 17 |
| R9A | 125 | 170 | 175 | 17 |
| R9X | 145 | 200 | 205 | 20 |
| R10A | 155 | 230 | 235 | 23 |
| FOR NON-CONTEXTUAL DISTRICTS | | | | |

| District | Maximum Base Height | Maximum Height for #Building or other Structures# with #non-qualifying ground floors# | Maximum Height for #Building or other Structures# with #qualifying ground floors# | Maximum Number of #Stories# |
|---|---|---|---|---|
| R6[2] outside #Manhattan Core# | 65 | 80 | 85 | 8 |
| R7[2] outside #Manhattan Core# | 75 | 100 | 105 | 10 |
| R8 | 105 | 140 | 145 | 14 |
| R9 | 125 | 170 | 175 | 17 |
| R10 | 155 | 230 | 235 | 23 |

---

[1] In R7X Districts, the modified base heights, maximum #building# heights and number of stories are permitted only for #buildings# containing #affordable independent residences for seniors#.

[2] For #zoning lots# or portions thereof within 100 feet of a #wide street#

(b) Alternative regulations for certain #Quality Housing buildings# in non-contextual districts

As an alternative to the provisions of paragraph (a) of this Section, for #Quality Housing buildings# containing #affordable independent residences for seniors# in R6 through R8 Districts without a letter suffix, the #street wall# location and height and setback provisions of Sections 23-661 and 23-662 need not apply to #buildings# on #zoning lots# that are located within 150 feet of: an elevated rail line; an open railroad right of way; a limited-access expressway, freeway, parkway, or highway, all of which prohibit direct vehicular access to abutting land; or an elevated #street# located on a bridge that prohibits direct vehicular access. Such 150 foot measurement shall be measured perpendicular from the edge of such infrastructure.

In lieu thereof, the height of a #building or other structure#, or portion thereof, within ten feet of a #wide street# or 15 feet of a #narrow street#, shall not exceed the maximum base height specified for the applicable zoning district in Table 2 of this Section. Beyond ten feet of a #wide street# and 15 feet of a #narrow street#, the height of the #building or other structure# shall not exceed the maximum #building# height specified for the applicable district in such Table, or the maximum number of #stories#, whichever is less.

TABLE 2
ALTERNATIVE MAXIMUM BASE HEIGHT
AND MAXIMUM BUILDING HEIGHT
FOR CERTAIN QUALITY HOUSING BUILDINGS
IN NON-CONTEXTUAL DISTRICTS

| District | Maximum Base Height | Maximum #Building or other Structure# Height | Maximum Number of #Stories# |
|---|---|---|---|
| R6 | 65 | 115 | 11 |
| R7 | 75 | 135 | 13 |
| R8 | 105 | 215 | 21 |

**23-665**
**Additional regulations**
R6 R7 R8 R9 R10

In the districts indicated, for all #Quality Housing buildings#, the following additional regulations shall apply:

(a) Existing #buildings# may be vertically #enlarged# by up to one #story# or 15 feet without regard to the #street wall# location requirements of Section 23-661.

(b) On #through lots# which extend less than 180 feet in maximum depth from #street# to #street#, the #street wall# location requirements Section 23-661 shall be mandatory along only one #street# frontage.

(c) The #street wall# location and minimum base height provisions of Sections 23-661 and 23-662, respectively, shall not apply along any #street# frontage of a #zoning lot# occupied by #buildings# whose #street wall# heights or widths will remain unaltered.

(d) The minimum base height provisions of Section 23-662 shall not apply to #buildings developed# or #enlarged# after February 2, 2011, that do not exceed such minimum base heights, except where such #buildings# are located on #zoning lots# with multiple #buildings#, one or more of which is #developed#, #enlarged# or altered after February 2, 2011, to a height exceeding such minimum base heights.

(e) The City Planning Commission may, upon application, authorize modifications in the required #street wall# location if the Commission finds that existing #buildings#, or existing open areas serving existing #buildings# to remain on the #zoning lot#, would be adversely affected by the location of the #street walls# in the manner prescribed in Section 23-661.

(f) For any #zoning lot# located in a Historic District designated by the Landmarks Preservation Commission, the #street wall# location and minimum base height regulations of Sections 23-661 and 23-662, respectively, or as modified in any applicable Special District, shall be modified as follows:

(1) The minimum base height of a #street wall# may vary between the height of the #street wall# of an adjacent #building# before setback, if such height is lower than the minimum base height required, up to the minimum base height requirements of Section 23-661, or as modified in any applicable Special District.

(2) The maximum base height of a #street wall# may vary between the height of the #street wall# of an adjacent #building# before setback, if such height is higher than the maximum base height allowed, and the maximum base height requirements of this Section, provided that such height not exceed 150 feet and provided such #zoning lot# is located within the area bounded by West 22nd Street, a line 100 feet west of Fifth Avenue, a line midway between West 16th Street and West 17th Street, and a line 100 feet east of Sixth Avenue.

(3) The location of the #street wall# of any #building# may vary between the #street wall# location requirements of Section 23-661, or as modified in any applicable Special District, and the location of the #street wall# of an adjacent #building# fronting on the same #street line#.

(g) In R9D Districts, where a #building# on an adjacent #zoning lot# has #dwelling unit# windows located within 30 feet of a #side lot line# of the #development# or #enlargement#, an open area extending along the entire length of such #side lot line# with a minimum width of 15 feet shall be provided. Such open area may be obstructed only by the permitted obstructions set forth in Section 23-44 (Permitted Obstructions in Required Yards or Rear Yard Equivalents).

(h) For the purposes of applying the #street wall# location as well as the height and setback provisions of Sections 23-661 and 23-662, respectively, where the Administrative Code establishes restrictions on the location of #buildings# on lots fronting upon and within 30 feet of Eastern Parkway in Community Districts 8 and 9 in the Borough of Brooklyn, lines drawn 30 feet north of and 30 feet south of, and parallel to, Eastern Parkway shall be considered the northern and southern #street lines# of Eastern Parkway.

**Regulations Applying in Special Situations**

**23-67**
**Special Height and Setback Provisions for Certain Areas ~~Relating to Specified Streets~~**

**23-671**
**Special provisions for zoning lots directly adjoining public parks**
R1 R2 R3 R4 R5 R6 R7 R8 R9 R10

In all districts, as indicated, a #public park# with an area of between one and fifteen acres shall be considered a #wide street# for the purpose of applying the regulations set forth in Sections 23-63 (Height and Setback in R1 through R5 Districts ~~Maximum Height of Front Wall and Required Front Setbacks~~), 23-64 (Basic Height and Setback Requirements) and 23-66 (Height and Setback Requirements for Quality Housing) to any #building or other structure# on a #zoning lot# adjoining such #public park#. However, the provisions of this Section shall not apply to a #public park# more than 75 percent of which is paved.

~~**23-672**~~
~~**Special provisions for certain streets in Community District 6 in the Borough of Brooklyn**~~

~~In Community District 6 in the Borough of Brooklyn, the following #streets# shall be considered #narrow streets# for the purposes of applying height and setback regulations: Second, Carroll and President Streets, between Smith and Hoyt Streets; First Place, Second Place, Third Place and Fourth Place.~~

**23-672**
**Special height and setback regulations in R10 Districts within Community District 7, Borough of Manhattan**

Within the boundaries of Community District 7 in the Borough of Manhattan, all #buildings or other structures# located in R10 Districts, except R10A or R10X Districts, utilizing the basic height and setback requirements of Section 23-64 (Basic Height and Setback Requirements) shall also comply with the provisions of this Section.

The front #building# wall of all #buildings# on a #zoning lot# with any frontage on a #wide street#, shall extend along the entire #wide street# frontage of the #zoning lot# without a setback for a height of 125 feet above the #curb level# or the full height of the #building#, whichever is less. Above a height of 125 feet, the front #building# wall may be set back at least 10 feet on a #wide street# or 15 feet on a #narrow street#. Above a height of 150 feet, the front #building# wall shall be set back at least 10 feet. These mandatory front #building# wall requirements also apply to all #buildings# along all #street lines# of #narrow streets# within 50 feet of their intersection with the #street lines# of #wide streets#. For the next 20 feet along the #street line# of a #narrow street#, the mandatory front #building# wall requirements are optional. The height and setback regulations of the underlying district shall apply along #street lines#, or portions thereof, not subject to the front #building# wall requirements.

Front wall recesses are permitted above the level of the second #story# ceiling or 23 feet above #curb level#, whichever is less, provided that the aggregate width of all recesses at the level of any #story# does not exceed 50 percent of the width of the front wall. The depth of such recess shall not exceed 10 feet. No front wall recesses are permitted within 20 feet of the intersection of two #street lines#.

Front wall openings are permitted below the level of the second #story# ceiling, for entrances only.

The preceding #street wall# location provisions shall not apply along any #street# frontage of a #zoning lot# occupied by existing #buildings# whose #street walls# remain unaffected by alterations or #enlargements# to such existing #buildings#.

However, the provisions of this Section shall not apply to any #building# for which the City Planning Commission has granted a special permit pursuant to Section 74-95 (Modifications of Housing Quality Special Permits) nor shall it apply to any #building# located within the #Special Lincoln Square District# or within the former West Side Urban Renewal Area, excluding frontages along Central Park West or to the #block# bounded by Frederick Douglass Circle, Cathedral Parkway, Manhattan Avenue, West 109th Street and Central Park West. On application, the City Planning Commission may grant special authorization for minor modifications of the mandatory front wall provisions of this Section involving an #enlargement#, upon a showing of compelling necessity. Such authorization, however, may in no event include modification of permitted #floor area# regulations.

**23-673**
**Special bulk regulations for certain sites in Community District 4, Borough of Manhattan**

Within the boundaries of Community District 4 in the Borough of Manhattan, excluding the #Special Clinton District#, for #developments# or #enlargements# in R8 Districts without a letter suffix, on #zoning lots# larger than 1.5 acres that include #residences# for which #public funding#, as defined in Section 23-911 (General definitions) is committed to be provided, the City Planning Commission may authorize modifications of height and setback regulations, provided the Commission finds that such modifications will facilitate the provision of such #residences#, and such modifications will not unduly obstruct access of light and air to the detriment of the occupants or users of #buildings# on the #zoning lot# or nearby properties, #open space# or #streets#. Prior to issuing a building permit for any #development# or #enlargement# utilizing modifications granted by this authorization, the Department of Buildings shall be furnished with written notice of a commitment from the appropriate funding agency for the provision of such #public funding#.

The Commission may prescribe appropriate conditions and safeguards to minimize adverse effects on the character of the surrounding area.

**23-674**
**Special height and setback regulations for certain sites in Community District 9, Borough of Manhattan**

Within the boundaries of Community District 9 in the Borough of Manhattan, all #buildings# located in R8 Districts north of West 125th Street shall be #developed# or #enlarged# pursuant to the Quality Housing Program. However, the alternate height and setback regulations set forth in paragraph (b) of Section 23-664 (Modified height and setback regulations for certain buildings) shall not apply to #developments# or #enlargements# on #zoning lots# providing either #affordable housing# pursuant to the Inclusionary Housing Program, as set forth in Section 23-90, inclusive, or #affordable independent residences for seniors#, where at least 20 percent of the #floor area# of the #zoning lot# is allocated to such #use#.

*  *  *

**23-69**
**Special Height Limitations**

*  *  *

**23-692**
**Height limitations for narrow buildings or enlargements**
R7-2 R7D R7X R8 R9 R10

In the districts indicated, portions of #buildings# with #street walls# less than 45 feet in width shall not be permitted above the following heights:

(a) For #interior lots#, and for #through lots#, which shall be treated as two separate #interior lots# of equal depth for the purposes of determining the height limitations of this Section, a height equal to the width of the #street# on which such #street walls# front or 100 feet, whichever is less;

*  *  *

(d) ~~Where such #street walls abut# an existing #building# with #street walls# that exceed the height permitted in paragraphs (a), (b) or (c) of this Section, such new #street walls# may reach the height of the tallest of such #abutting building# walls if they front on a #wide street#, or the lowest of such #abutting building# walls if they front on a #narrow street#, provided such new #street walls# are fully contiguous at every level with such #abutting street walls#.~~

The heights permitted in paragraphs (a), (b) or (c) of this Section may be exceeded, if:

(1) On a #wide street#, such portion of a #building# with a #street wall# less than 45 feet in width #abuts# an existing #building# with a #street wall# that exceeds such permitted heights. Such new #street walls# may reach the height of such #abutting building#, or where there are two #abutting buildings# that exceed such heights, such new #street wall# may reach the height of the tallest of such #abutting buildings#; or

(2) On a #narrow street#, such #street walls abut# two existing #buildings# with #street walls# that both exceed the heights permitted. Such new #street walls# may reach the height of the lowest of such #abutting building#; and

(3) such new #street walls# shall be fully contiguous at every level with such #abutting street walls#.

In addition, the following rules shall apply:

(1) The front height and setback regulations and any height limitations of the underlying district shall apply, except that the alternate front setback and tower regulations of Sections 23-642, 23-65, 24-53, 24-54, 33-44 and 33-45 shall not apply. In the event of a conflict between the underlying regulations and the regulations of this Section, the more restrictive shall apply.

* * *

(6) #Quality Housing buildings# shall be exempt from the provisions of this Section provided the width of the #street wall# at the maximum base height required by ~~specified in the applicable table in~~ Sections 23-66~~33~~ or ~~35-24~~ 35-65 is at least 45 feet. For such #buildings#, a #street wall# that is less than 45 feet wide may be constructed above such base. For the purposes of this paragraph (6), #abutting buildings# on a single #zoning lot# shall not be considered a single #building#. However, where all the requisite structural framing and all enclosing walls and roofs were completed for an #enlargement#, in accordance with a building permit issued prior to a September 11, 2007 Board of Standards and Appeals (67-07-A) ruling that resulted in the #enlargement# being ineligible for a certificate of occupancy, #abutting buildings# on a single #zoning lot# may be considered a single #building# provided such #zoning lot# is formed prior to August 2, 2011.

(7) The provisions of this Section shall not apply to #Quality Housing buildings# on #zoning lots# providing either #affordable housing# pursuant to the Inclusionary Housing Program, as set forth in Section 23-90, inclusive, or #affordable independent residences for seniors#, where at least 20 percent of the #floor area# of such #zoning lot# is allocated to such #use#.

**23-693**
**Special provisions applying adjacent to R1 through R6B Districts**
R6 R7 R8 R9 R10

In the districts indicated, the #development# or #enlargement# of a #building#, or portions thereof, within 25 feet of an R1, R2, R3, R4, R5 or R6B District, shall~~:~~ not exceed a height of 75 feet, or the applicable maximum base height of the district set forth in either Section 23-662 (Maximum height of buildings and setback regulations), or 23-664 (Modified height and setback regulations for certain buildings), whichever is less.

~~(a) not exceed a height of 35 feet where such adjoining district is an R1, R2, R3, R4 or R5 District; and~~

~~(b) comply with the height and setback regulations of an R6B District where such adjoining district is an R6B District.~~

**23-70**
**MINIMUM REQUIRED DISTANCE BETWEEN TWO OR MORE BUILDINGS ON A SINGLE ZONING LOT**

**23-71**
**Minimum Distance between Buildings on a Single Zoning Lot**

R1 R2 R3 R4 R5 R6 R7 R8 R9 R10

In all districts, as indicated, the minimum distance between the portion of a #building# containing #residences# and any other #building# on the same #zoning lot# shall be as provided in this Section.

However, these provisions do not apply:

(a) to the extent that such two #buildings# are separated from each other by a #rear yard equivalent# as set forth in Section 23-532 (Required rear yard equivalents) or 23-533 (Required rear yard equivalents for Quality Housing buildings), as applicable; or

(b) to space between a #single-family#, #two-family#, or three-family #residence# and a garage #accessory# thereto.

**23-711**
**Standard minimum distance between buildings**
R1 R2 R3 R4 R5 R6 R7 R8 R9 R10

The minimum distance between #single-# and #two-family residences# and any other #building#, or portion thereof, on the same #zoning lot# in R1 through R5 Districts shall be set forth in paragraph (a) of this Section. The minimum distance between #buildings# with three or more #dwelling units# and any other #building#, or portion thereof, on the #zoning lot# in R3 through R5 Districts, as well as the minimum distance between all #building#, or portions thereof, in R6 through R10 Districts shall be as set forth in paragraph (b). Additional provisions are set forth in paragraph (c) of this Section.

For the purpose of this Section, #abutting buildings# on a single #zoning lot# may be considered a single #building#. If two or more portions of a #building# are not connected or not #abutting# at a particular level, such separated portions shall comply with the provisions of paragraph (a) or paragraph (b)(1) of this Section, as applicable. In applying the provisions of paragraphs (a) and (b)(1) of this Section, the height of such separated portions shall be measured from the roof of the connecting or #abutting# portion of such #building#, as applicable, instead of from the #base plane# or #curb level#, as applicable.

For the purposes of this Section, wall condition shall be defined as follows:

"wall to wall" is a condition where two walls of #buildings# face each other, and neither wall contains a #legally required window#;

"wall to window" is a condition where two walls of #buildings# face each other, and one wall contains a #legally required window# and the other wall does not contain a #legally required window#;

"window to window" is a condition where two walls of #buildings# face each other, and both walls contain a #legally required window#.

(a) For single- and two-family residences

For #single-# and #two- family residences# in R1 through R5 Districts, ~~In all districts, as indicated,~~ the required minimum distance between the portion of a #building# containing #dwelling units# and any other #building# on the same #zoning lot# shall vary according to the height of such #buildings# and the presence of #legally required windows# in facing #building# walls. Such minimum distance shall be, in feet, as indicated in the ~~following~~ table below, and shall be measured perpendicular to the #building# wall or window, as applicable.

| | Maximum #Building# Height above #Base Plane# or #Curb Level#, as Applicable (in feet) | | | | |
|---|---|---|---|---|---|
| Wall Condition~~*~~ | 25 | 35 | 40 | 50 | Over 50 |
| Wall to Wall | 20 | 25 | 30 | 35 | 40 |
| Wall to Window | 30 | 35 | 40 | 45 | 50 |
| Window to Window | 40 | 45 | 50 | 55 | 60 |

~~* Wall condition shall be defined as:~~

~~"wall to wall" is a condition where two walls of #buildings# face each other, and neither wall contains a #legally required window#;~~

~~"wall to window" is a condition where two walls of #buildings# face each other, and one wall contains a #legally required window# and the other wall does not contain a #legally required window#;~~

~~"window to window" is a condition where two walls of #buildings# face each other, and both walls contain a #legally required window#.~~

(b) For #buildings# with three or more #dwelling units# in R3 through R5 Districts and all #buildings# in R6 through R10 Districts

For #buildings# with three or more #dwelling units# in R3 through R5 Districts, and for all #buildings# in R6 through R10 Districts, the provisions of this paragraph (b) shall apply. Where two or more portions of a #building#, including #abutting# portions thereof, are not connected at a particular level above grade, such separated portions shall comply with paragraph (b)(1) of this Section. Where there are multiple

#buildings# on a single #zoning lot# that do not connect at any level, such #buildings# shall comply with paragraph (b)(2) of this Section.

(1) For separated portions of a #building#

The required minimum distance between the portion of a #building# containing #dwelling units# and any other portion of the #building#, including #abutting# portions thereof, as applicable, on the same #zoning lot# shall vary according to the height of such #buildings# and the presence of #legally required windows# in facing #building# walls. Such minimum distance shall be as indicated in the table below, and shall be measured perpendicular to the #building# wall or window, as applicable.

| | Maximum #Building# Height above Roof of Connecting Portion (in feet) | | | | |
|---|---|---|---|---|---|
| Wall Condition | 25 | 35 | 40 | 50 | Over 50 |
| Wall to Wall | 20 | 25 | 30 | 35 | 40 |
| Wall to Window | 30 | 35 | 40 | 40 | 40 |
| Window to Window | 40 | 40 | 40 | 40 | 40 |

(2) Two or more #buildings# on a single #zoning lot#

The minimum distance between two or more #buildings# on the same #zoning lot# that are not connected at any level shall be 40 feet, as measured between the closest points of such #buildings#, for portions of #buildings# lower than 125 feet, as measured from the #base plane# or #curb level#, as applicable.

Portions of such #buildings# higher than 125 feet shall be at least 80 feet apart, as measured between the closest points of such #buildings#. However, such minimum distance need not exceed 40 feet if such portions of #buildings# above a height of 125 feet do not exceed, in aggregate, a #lot coverage# of 40 percent, or for lots of less than 20,000 square feet, the percentage set forth in the table below:

AGGREGATED LOT COVERAGE OF PORTIONS OF BUILDINGS ON A SMALL ZONING LOT

| Area of #Zoning Lot# | Maximum Percent of |
|---|---|

| (in square feet) | #Coverage# |
|---|---|
| 10,500 or less | 50 |
| 10,501 to 11,500 | 49 |
| 11,501 to 12,500 | 48 |
| 12,501 to 13,500 | 47 |
| 13,501 to 14,500 | 46 |
| 14,501 to 15,500 | 45 |
| 15,501 to 16,500 | 44 |
| 16,501 to 17,500 | 43 |
| 17,501 to 18,500 | 42 |
| 18,501 to 19,999 | 41 |

(c) In addition, the following rules shall apply:

~~(a) the minimum distances set forth in this table shall be provided at the closest point between #buildings#;~~

~~(b)~~ (1) any portion of a #building# that qualifies as a #building segment# may be treated as a separate #building# for the purposes of determining the minimum distance required between such #building segment# and another #building# or #building segment#;

~~(c)~~ (2) where #buildings# of different heights face each other, the average of the heights of such #buildings# shall determine the minimum distance required between them;

~~(d)~~ (3) projections having a maximum height of 25 feet above adjoining grade, a maximum depth of five feet, and an aggregate width not exceeding 25 percent of the #building# wall from which they project, may penetrate the minimum spacing requirements. However, such projections shall not be permitted in open spaces provided pursuant to paragraph (b)(2) of this Section;

~~(e) portions of #buildings# above 125 feet that exceed, in aggregate, a #lot coverage# of 40 percent, shall be spaced at least 80 feet apart;~~

~~(f)~~ (4) in R1, R2, R3, R4A and R4-1 Districts within #lower density growth management areas#, the provisions of this paragraph~~, (f)~~ (c)(5)~~,~~ shall apply to any #zoning lot# with two or more #buildings# where at least 75 percent of the #floor area# of one #building# is located beyond 50 feet of a #street line# and the #private road# provisions do not apply. For the purposes of this paragraph, any #building# containing #residences# with no #building# containing #residences# located between it and the #street line# so that lines drawn perpendicular to the #street line# do not intersect any other #building# containing #residences# shall be considered a "front building," and any #building# containing #residences# with at least 75 percent of its #floor area# located beyond the #rear wall line#, or prolongation thereof, of a "front building" shall be considered a "rear building." The minimum distances set forth in the table in this Section shall apply, except that a minimum distance of 45 feet shall be provided between any such front and rear #buildings#; and

~~(g)~~ (5) for #buildings# existing on April 30, 2012, the minimum distances set forth in the table in this Section, and any #non-complying# distance greater than eight feet, may be reduced by up to eight inches of exterior wall thickness, provided the added wall thickness has a thermal resistance (R-value) of at least 1.5 per inch. A #non-complying# distance of eight feet or less shall be limited to a total reduction of one inch of wall thickness for each foot of such existing distance between buildings. However, such projections shall not be permitted in open spaces provided pursuant to paragraph (b)(2) of this Section.

* * *

**23-80**
**COURT REGULATIONS, MINIMUM DISTANCE BETWEEN WINDOWS AND WALLS OR LOT LINES AND OPEN AREA REQUIREMENTS**

* * *

**23-84**
**Outer Court Regulations**

* * *

**23-841**
**Narrow outer courts**

R1 R2 R3 R4 R5 ~~R6 R7 R8 R9 R10~~

(a) In the districts indicated, ~~In all districts, as indicated,~~ if an #outer court# is less than 30 feet wide, the width of such #outer court# shall be at least one and one-third the depth of such #outer court#.

However, in R3, R4 or R5 Districts, for #single-# and #two-family residences#, three #stories# or less in height, the width of such #outer court# shall be at least equal to the depth of such #outer court#.

R6 R7 R8 R9 R10

(b) In the districts indicated, if an #outer court# is less than 30 feet wide, the width of such #outer court# shall be at least equal to the depth of such #outer court#.

However, the depth of an #outer court# may exceed its width in a small #outer court#, provided that:

(1) at least 50 percent of the walls bounding such small #outer court# have a maximum height of 75 feet or less, as measured from the lowest level to the highest level of such #outer court#. Such maximum height limit shall also extend to the area within 10 feet of such court opening;

(2) the area of such small #outer court# shall not be less than 200 square feet and no dimension shall be less than 10 feet;

(3) no small #outer court# shall be permitted below the level of the first #story#; and

(4) no #legally required windows# shall face onto such small #outer court# or any #outer court recess# thereof.

**23-842**
**Wide outer courts**

R1 R2 R3 R4 R5 ~~R6 R7 R8 R9 R10~~

(a) In the districts indicated, ~~In all districts, as indicated,~~ if an #outer court# is 30 feet or more in width, the width of such #outer court# must be at least equal to the depth of such #outer court#, except that such width need not exceed 60 feet.

R6 R7 R8 R9 R10

(b) In the districts indicated, if an #outer court# is 30 feet or more in width, an #outer court# may extend to any depth.

**23-843**
**Outer court recesses**

R1 R2 R3 R4 R5 ~~R6 R7 R8 R9 R10~~

(a) In the districts indicated, ~~In all districts, as indicated~~, the width of an #outer court recess# shall be at least twice the depth of the recess, except that such width need not exceed 60 feet.

R6 R7 R8 R9 R10

(b) In the districts indicated, the width of an #outer court recess# shall be at least equal to the depth of such #outer court recess#, except that such width need not exceed 30 feet

**23-844**
**Modification of court and side yard regulations in the area of the former Bellevue South Urban Renewal Plan in the Borough of Manhattan**

In the Borough of Manhattan, in the area designated by the former Bellevue South Urban Renewal Plan, for a #development# or #enlargement# on a #zoning lot# that adjoins a #zoning lot# including a #building# containing #residences# with #non-complying courts# along the common #side lot line#, the #court# regulations of Section 23-80 and the open area requirements of paragraph (c) of Section 23-462 (Side yards for all other ~~residential~~ buildings containing residences) may be modified to allow an open area at least eight feet wide to extend along a portion of the #side lot line#.

**23-85**
**Inner Court Regulations**

R1 R2 R3 R4 R5 R6 R7 R8 R9 R10

In all districts, as indicated, #inner courts# shall be in compliance with the provisions of this Section.

**23-851**
**Minimum dimensions of inner courts**

For the purposes of this Section, that portion of an open area not part of an #inner court# and over which, when viewed directly from above, lines perpendicular to a #lot line# may be drawn into such #inner court#, shall be considered part of such #inner court#.

R1 R2 R3 R4 R5 ~~R6 R7 R8 R9 R10~~

(a) In all districts, as indicated, the area of an #inner court# shall not be less than 1,200 square feet, and the minimum dimension of such #inner court# shall not be less than 30 feet. ~~For the purposes of this Section, that portion of an open area not part of an #inner court# and over which, when viewed directly from above, lines perpendicular to a #lot line# may be drawn into such #inner court#, shall be considered part of such #inner court#.~~ In R1, R2 and R3 Districts, the area of an #inner court# shall not be less than 200 square feet and the minimum dimension of such #inner court# shall not be less than 12 feet.

R6 R7 R8 R9 R10

(b) In all districts, as indicated, the area of an #inner court#, shall not be less than 1,200 square feet, and the minimum dimension of such #inner court# shall not be less than 30 feet.

However, the area and dimensions of an #inner court# may be reduced for a small #inner court#, provided that:

(1) At least 50 percent of the walls bounding such small #inner court# have a maximum height of 75 feet or less, as measured from the lowest level to the highest level of such #inner court#. Such maximum height limit shall also extend to the area within 10 feet of such court opening;

(2) the area of such small #inner court# shall not be less than 200 square feet and no dimension shall be less than 10 feet;

(3) no #legally required windows# shall face onto such small #inner court# or any #inner court recess# thereof.

**23-852**
**Inner court recesses**

R1 R2 R3 R4 R5 ~~R6 R7 R8 R9 R10~~

(a) In the districts indicated, ~~In all districts, as indicated,~~ the width of an #inner court recess# shall be at least twice the depth of the recess. However, if the recess opening is 60 feet or more in width, this provision shall not apply.

R6 R7 R8 R9 R10

(b) In the districts indicated, the width of an #inner court recess# shall be at least equal to the depth of the #inner court recess#, except that such width need not exceed 30 feet.

* * *

**23-86**
**Minimum Distance Between Legally Required Windows and Walls or Lot Lines**

* * *

**23-861**
**General provisions**

R1 R2 R3 R4 R5 R6 R7 R8 R9 R10

In all districts, as indicated, except as otherwise provided in Section 23-862 (Minimum distance between legally required windows and lot lines on small corner lots in R9 or R10 Districts) or Section 23-863 (Minimum distance between legally required windows and any wall in an inner court), the minimum distance between a #legally required window# and:

(a) any wall;

(b) a #rear lot line#, or vertical projection thereof; or

(c) a #side lot line#, or vertical projection thereof;

shall be 30 feet, measured in a horizontal plane at the sill level of, and perpendicular to, such window for the full width of the rough window opening; provided, however, that a #legally required window# may open on any #outer court# meeting the requirements of Section 23-84, except for small #outer courts# in R6 through R10 Districts, the provisions for which are set forth in paragraph (b) of Section 23-841 (Narrow outer courts).

However, for shallow #interior lots# in R6 through R10 Districts, the minimum distance between a #legally required window# and a #rear lot line#, or vertical projection thereof, may be reduced to equal the #rear yard# depth required pursuant to the provisions of Section 23-52 (Special Provisions for Shallow Interior Lots). However, in no event shall such minimum distance between a #legally required window# and a #rear lot line#, or vertical projection thereof, be less than 20 feet.

In R3, R4 and R5 Districts, the minimum dimension between a #legally required window# and a #side lot line# shall be 15 feet. Such 15 foot dimension shall be measured in a horizontal plane perpendicular to the #side lot line# or vertical projection thereof. Furthermore, such area with a 15 foot dimension shall be open to the sky from ground level up for the entire length of the #side lot line#. Only air conditioning condensation units, chimneys, downspouts, eaves, exterior wall thickness, gutters, open #accessory# off-street parking spaces, ramps for access by the disabled ~~handicapped~~, and steps shall be permitted obstructions in such open area, subject to the conditions set forth in paragraph (a) of Section 23-44 (Permitted Obstructions in Required Yards or Rear Yard Equivalents), and provided such obstructions will not reduce the minimum width of the open area by more than three feet.

* * *

**23-863**
**Minimum distance between legally required windows and any wall in an inner court**

R1 R2 R3 R4 R5 R6 R7 R8 R9 R10

In all districts, as indicated, the minimum horizontal distance between a #legally required window# opening on an #inner court# and any wall opposite such window on the same #zoning lot# shall not be less than 30 feet~~, nor shall any such wall be nearer to such window than a distance equal to one-half the total height of such wall above the sill level of such window. Such minimum distance need not exceed 60 feet~~. However, such provisions shall not apply to small #inner courts#, the provisions for which are set forth in paragraph (b) of Section 23-851 (Minimum dimensions of inner courts).

Such minimum distance shall be measured in a horizontal plane at the sill level of, and perpendicular to, the #legally required window# for the full width of the rough window opening, between such window and a projection of such wall onto such horizontal plane.

* * *

**23-89**
**Open Area Requirements for Residences**

*  *  *

**23-892**
**In R6 through R10 Districts**

R6A R6B R7A R7B R7D R7X R8A R8B R8X R9A R9D R9X R10A R10X

~~(a)~~ In the districts indicated, and for #Quality Housing buildings# in R6 through R10 Districts without a letter suffix, the ~~entire~~ area of the #zoning lot# between the #street line# and all #street walls# of the #building# and their prolongations shall be planted at ground level, or in raised planting beds that are permanently affixed to the ground pursuant to the provisions of Section 28-23 (Planting Areas). ~~, except that such plantings shall not be required at the entrances to and exits from the #building#, within driveways accessing off-street parking spaces located within, to the side, or rear of such #building#, or between #commercial uses# and the #street line#. No #zoning lot# shall be altered in any way that will either create a new #non-compliance# or increase the degree of #non-compliance# with the provisions of this Section.~~

~~R6 R7 R8 R9 R10~~

~~(b) In the districts indicated without a letter suffix, on #zoning lots# containing a #Quality Housing building#, the entire area of the #zoning lot# between the #street line# and all #street walls# of the #building# and their prolongations shall be planted at ground level, or in raised planting beds that are permanently affixed to the ground, except that such plantings shall not be required at the entrances to and exits from the #building# within driveways accessing off-street parking spaces located within, to the side, or rear of such #building#, or between #commercial uses# and the #street line#.~~

*  *  *

**23-90**
**INCLUSIONARY HOUSING**

**23-91**
**Definitions**

For the purposes of this Section, inclusive, matter in italics is defined either in Section 12-10 (DEFINITIONS) or in this Section.

**23-911**
**General definitions**

The following definitions shall apply throughout Section 23-90 (INCLUSIONARY HOUSING), inclusive:

*  *  *

Affordable housing unit

An “affordable housing unit” is:

(a) a #dwelling unit#, other than a #super’s unit#, that is used for class A occupancy as defined in the Multiple Dwelling Law and that is or will be restricted, pursuant to a #regulatory agreement#, to occupancy by:

(1) #low income households#;

(2) where permitted by paragraph (c) of Section 23-154 (Inclusionary Housing) ~~23-953 (Special floor area compensation provisions in specified areas)~~, either #low income households# or a combination of #low income households# and #moderate income households# or #middle income households#; or

(3) upon #resale# of #homeownership affordable housing units#, other #eligible buyers#, as applicable;

*  *  *

Compensated zoning lot

A “compensated zoning lot” is a #zoning lot# that contains a #compensated development# and receives an increased #floor area ratio#, pursuant to the provisions of Section 23-154 (Inclusionary Housing) and Section 23-90, inclusive.

*  *  *

Floor area compensation

“Floor area compensation” is any additional #residential floor area# permitted in a #compensated development#, pursuant to the provisions of Section 23-154 (Inclusionary Housing) and Section 23-90, inclusive.

*  *  *

**23-92**
**General Provisions**

The Inclusionary Housing Program is established to promote the creation and preservation of housing for residents with varied incomes in redeveloping neighborhoods and thus to promote the general welfare. The requirements of this program are set forth in Section 23-90 (INCLUSIONARY HOUSING), inclusive.

Wherever the provisions of Section 23-90, inclusive, provide that approval is required, #HPD# may specify the form of such approval in the #guidelines#.

**23-93**
**Applicability**

**23-931**
**Lower income housing plans approved prior to July 29, 2009**

* * *

The #floor area ratio# of a #compensated development# may be increased in exchange for #lower income housing#, pursuant to a #lower income housing plan#, as both terms were defined by Section 23-93 prior to July 29, 2009, provided such #lower income housing# complies with all applicable provisions of Section 23-90 (INCLUSIONARY HOUSING) in effect prior to July 29, 2009, except as provided in this Section. Where such a #compensated development# is located in an R10 District outside of #Inclusionary Housing designated areas#, the provisions of paragraph (a) of Section 23-154 (Inclusionary Housing) ~~Section 23-951 (Floor area compensation in R10 Districts other than Inclusionary Housing designated areas)~~ shall not apply, and Section 23-941 (In R10 Districts other than Inclusionary Housing designated areas) as such Section existed prior to July 29, 2009, shall apply.

* * *

**23-932**
**R10 districts**

The Inclusionary Housing Program shall apply in all R10 Districts located in #Inclusionary Housing designated areas#, subject to the provisions of paragraph (b) of Section 23-154 (Inclusionary Housing) ~~Section 23-952~~. The Inclusionary Housing Program shall apply in all other R10 Districts, subject to the provisions of paragraph (a) of Section 23-154 ~~Section 23-951 (Floor area compensation in R10 Districts other than Inclusionary Housing designated areas)~~, as applicable.

* * *

**23-95**
**Compensated Zoning Lots**

The #residential floor area ratio# of a #compensated zoning lot# may be increased in accordance with the applicable provisions of Section 23-154 (Inclusionary Housing).

~~**23-951**~~
~~**Floor area compensation in R10 Districts other than Inclusionary Housing designated areas**~~

~~The #residential floor area ratio# of a #compensated zoning lot# may be increased from 10.0 to a maximum of 12.0 at the rate set forth in this Section, if such #compensated zoning lot# provides #affordable housing# that is restricted to #low income floor area#.~~

~~For each square foot of #floor area# provided for a type of #affordable housing# listed in the table in this Section, the #floor area# of the #compensated zoning lot# may be increased by the number of square feet set forth in the table, as applicable. Any #generating site# for which #public funding# has been received within the 15 years preceding the #regulatory agreement date#, or for which #public funding# is committed to be provided subsequent to such date, shall be deemed to be provided with #public funding#.~~

~~OPTIONS~~

| | | |
|---|---|---|
| ~~Without #public funding#~~ | ~~#New construction affordable housing# or #substantial rehabilitation affordable housing#~~ | ~~3.5~~ |
| | ~~#Preservation affordable housing#~~ | ~~2.0~~ |
| ~~With #public funding#~~ | ~~#New construction affordable housing#, #substantial rehabilitation affordable housing# or #preservation affordable housing#~~ | ~~1.25~~ |

**~~23-952~~**
**~~Floor area compensation in Inclusionary Housing designated areas~~**

~~The provisions of this Section shall apply in #Inclusionary Housing designated areas# set forth in APPENDIX F of this Resolution.~~

~~The #residential floor area# of a #zoning lot# may not exceed the base #floor area ratio# set forth in the table in this Section, except that such #floor area# may be increased on a #compensated zoning lot# by 1.25 square feet for each square foot of #low income floor area# provided, up to the maximum #floor area ratio# specified in the table. However, the amount of #low income floor area# required to receive such #floor area compensation# need not exceed 20 percent of the total #floor area#, exclusive of ground floor non-#residential floor area#, or any #floor area# increase for the provision of a #FRESH food store#, on the #compensated zoning lot#.~~

~~Maximum #Residential Floor Area Ratio#~~

| ~~District~~ | ~~Base #floor area ratio#~~ | ~~Maximum #floor area ratio#~~ |
|---|---|---|
| ~~R6B~~ | ~~2.00~~ | ~~2.20~~ |
| ~~R6[1]~~ | ~~2.20~~ | ~~2.42~~ |

| | | |
|---|---|---|
| ~~R6[2] R6A R7-2[1]~~ | ~~2.70~~ | ~~3.60~~ |
| ~~R7A R7-2[2]~~ | ~~3.45~~ | ~~4.60~~ |
| ~~R7-3~~ | ~~3.75~~ | ~~5.0~~ |
| ~~R7D~~ | ~~4.20~~ | ~~5.60~~ |
| ~~R7X~~ | ~~3.75~~ | ~~5.00~~ |
| ~~R8~~ | ~~5.40~~ | ~~7.20~~ |
| ~~R9~~ | ~~6.00~~ | ~~8.00~~ |
| ~~R9A~~ | ~~6.50~~ | ~~8.50~~ |
| ~~R9D~~ | ~~7.5~~ | ~~10.0~~ |
| ~~R9X~~ | ~~7.3~~ | ~~9.70~~ |
| ~~R10~~ | ~~9.00~~ | ~~12.00~~ |

~~---~~

~~[1] for #zoning lots#, or portions thereof, beyond 100 feet of a #wide street#~~

~~[2] for #zoning lots#, or portions thereof, within 100 feet of a #wide street#~~

**~~23-953~~**
**~~Special floor area compensation provisions in specified areas~~**

~~(a) Optional provisions for #large-scale general developments# in C4-6 or C5 Districts~~

~~Within a #large-scale general development# in a C4-6 or C5 District, the special optional regulations as set forth in this paragraph, (a), inclusive, modify the provisions of Section 23-952 (Floor area compensation in Inclusionary Housing designated areas):~~

~~(1) The #residential floor area# of a #development# or #enlargement# may be increased by 0.833 square feet for each one square foot of #moderate income floor area#, or by 0.625 square feet for each one square foot of #middle income floor area#, provided that for each square foot of such #floor area compensation#, there is one square foot of #floor area compensation#, pursuant to Section 23-952;~~

~~(2) However, the amount of #affordable housing# required to receive such #floor area compensation# need not exceed the amounts specified in this paragraph, (a)(2). If #affordable housing# is provided for both #low income# and #moderate income households#, the amount of #moderate income floor area# need not exceed 15 percent of the total #floor area#, exclusive of ground floor non-#residential floor area#, on the #zoning lot#, provided that the amount of #low income floor~~

~~area# is at least 10 percent of the total #floor area#, exclusive of ground floor non-#residential floor area#, on the #zoning lot#. If #affordable housing# is provided for both #middle income households# and #low income households#, the amount of #middle income floor area# need not exceed 20 percent of the total #floor area#, exclusive of ground floor non-#residential floor area#, on the #zoning lot#, provided that the amount of #low income floor area# is at least 10 percent of the total #floor area#, exclusive of ground floor non-#residential floor area#, on the #zoning lot#.~~

~~For the purposes of this paragraph, (a), inclusive, #low income floor area# may be considered #moderate income floor area# or #middle income floor area#, and #moderate income floor area# may be considered #middle income floor area#.~~

~~(b) Special provisions for #large-scale general developments# in Community District 1 in the Borough of Queens~~

~~Special provisions shall apply to #zoning lots# within a #large-scale general development# that contains R6B, R7A and R7-3 Districts within an #Inclusionary Housing designated area#, as follows:~~

~~(1) For #zoning lots#, or portions thereof, that are located within R6B, R7A or R7-3 Districts, the base #floor area ratio# set forth in Section 23-952 shall not apply. No #residential development# or #enlargement# shall be permitted unless #affordable floor area# is provided pursuant to the provisions of this paragraph. The amount of #low-income floor area# provided shall equal no less than 10 percent of the #floor area# on such #zoning lot#, excluding any ground floor #non-residential floor area#, #floor area# within a #school#, or any #floor area# increase resulting from the provision of a #FRESH food store# and the amount of #moderate-income floor area# provided shall equal no less than 15 percent of the #floor area# on such #zoning lot#, excluding any ground floor #non-residential floor area#, #floor area# within a #school#, or any #floor area# increase resulting from the provision of a #FRESH food store#. For the purposes of this paragraph (b)(1), inclusive, #low income floor area# may be considered #moderate income floor area#; and~~

~~(2) The amount of #affordable floor area# utilizing #public funding# that may count toward satisfying the #affordable floor area# required in paragraph (b)(1) of this Section shall be determined in accordance with procedures prescribed by the City Planning Commission pursuant to the provisions of Section 74-743 (Special provisions for bulk modification).~~

~~(c) Special provisions for #compensated zoning lots#~~

~~Special provisions shall apply to #compensated zoning lots# located within:~~

~~(1) R6, R7-3 and R8 Districts on #waterfront blocks# in #Inclusionary Housing designated areas# within Community District 1, Borough of Brooklyn, as set forth in Section 62-352; or~~

~~(2) the #Special Hudson Yards District#, #Special Clinton District# and #Special West Chelsea District#, as set forth in Sections 93-23, 96-21 and 98-26, respectively.~~

**~~23-954~~ 23-951**

**Height and setback for compensated developments in Inclusionary Housing designated areas**

In #Inclusionary Housing designated areas#, the #compensated development# shall comply with the height and setback regulations of Sections 23-66 (Height and Setback Requirements for Quality Housing Buildings) or 35-65 ~~23-633 (Street wall location and height and setback regulations in certain districts) or 35-24 (Special Street Wall Location and Height and Setback Regulations in Certain Districts)~~, as applicable, except that:

(a) in #Special Mixed Use Districts#, the #compensated development# shall comply with the provisions of paragraphs (a) or (b) of Section 123-662 (All buildings in Special Mixed Use Districts with R6, R7, R8, R9 and R10 District designations), as applicable. However, where the #Residence District# designation is an R6 District without a letter suffix, the #compensated development# shall comply with the height and setback regulations of Section 23-66 ~~Section 23-633~~, regardless of whether the #building# is #developed# or #enlarged# pursuant to the Quality Housing Program;

* * *

# Article II - Residence District Regulations

**Chapter 4**
**Bulk Regulations for Community Facilities in Residence Districts**

**24-00**
**APPLICABILITY, GENERAL PURPOSES AND DEFINITIONS**

**24-01**
**Applicability of this Chapter**

The #bulk# regulations of this Chapter apply to any #zoning lot# or portion of a #zoning lot# located in any #Residence District# which contains any #community facility building#, or to the #community facility# portion of any #building# located in any #Residence District# which is used for both #residential# and #community facility uses#, except where specifically modified by the provisions of this Chapter.

The #bulk# regulations of Article II, Chapter 3, shall apply to any #zoning lot# or portion of a #zoning lot# in any #Residence District# which contains a #residential building#, or to the #residential# portion of any #building# located in any #Residence District# which is used for both #residential# and #community facility uses#, except where specifically modified by the provisions of this Chapter.

In addition, the #bulk# regulations of this Chapter, or of specified sections thereof, also apply in other provisions of this Resolution where they are incorporated by cross reference.

Existing #buildings or other structures# that do not comply with one or more of the applicable #bulk# regulations are #non-complying buildings or other structures# and are subject to the regulations set forth in Article V, Chapter 4.

Special regulations applying to #large-scale community facility developments# or to #community facility uses# in #large-scale residential developments# are set forth in Article VII, Chapter 8.

Special regulations applying only in Special Purpose Districts are set forth in Articles VIII, IX, X, XI, XII and XIII.

Special regulations applying in the #waterfront area# are set forth in Article VI, Chapter 2.

Special regulations applying in the #flood zone# are set forth in Article VI, Chapter 4.

**24-011**
**<u>Quality Housing Program</u>**
**~~Exceptions to the bulk regulations of this Chapter~~**

~~R1 R2 R3 R4 R5~~

The applicability of the Quality Housing Program to #community facility buildings# or portions of #buildings# containing #community facility uses# is set forth in this Section, except as modified in Section 24-012 (Exceptions to the bulk regulations of this Chapter).

In R6A, R6B, R7A, R7B, R7D, R7X, R8A, R8B, R8X, R9A, R9D, R9X, R10A or R10X Districts, any #community facility building# or portion thereof shall comply with the #bulk# regulations for #Quality Housing buildings# set forth in Article II, Chapter 3. In all other R6, R7, R8, R9 or R10 Districts, if the #residential# portion of a #building# containing a #community facility use# is #developed# or #enlarged# pursuant to the Quality Housing Program, the entire #building# shall comply with the height and setback regulations for #Quality Housing buildings# set forth in Article II, Chapter 3.

Special regulations are set forth for #buildings# containing #long-term care facilities# or philanthropic or non-profit institutions with sleeping accommodations in Section 24-013 (Special Provisions for Certain Community Facility Uses).

#Quality Housing buildings# shall comply with the additional provisions set forth in Article II, Chapter 8 (The Quality Housing Program). In R5D Districts, certain provisions of Article II, Chapter 8, shall apply as set forth in Section 28-01 (Applicability of this Chapter).

~~(a) #Buildings# used partly for #community facility uses#~~

~~Except as provided in paragraph (b) of this Section, in R3A, R3X, R3-1, R4A, R4-1, R4B or R5B Districts, the #bulk# regulations of this Chapter shall apply only to a #zoning lot# or portion of a #zoning lot# that contains a #community facility building#, and the #bulk# regulations of Article II, Chapter 3, shall apply to any #zoning lot# or portion of a #zoning lot# that contains any #building# that is used partly for #community facility use# and partly for #residential use#. In such districts, the #bulk# regulations of this Chapter may apply to the #community facility# portion of a #building# that is used partly for #community facility use# and partly for #residential use# only where:~~

~~(1) such #community facility use# has received tax-exempt status from the New York City Department of Finance, or its successor, pursuant to Section 420 of the New York State Real Property Tax Law; or~~

~~(2) such #building# has received an authorization pursuant to Section 24-04 (Modifications of Bulk Regulations in Certain Districts).~~

~~(b) #Buildings# containing certain #community facility uses# in #lower density growth management areas#~~

~~(1) In the districts indicated, in #lower density growth management areas#, the #bulk# regulations of this Chapter shall not apply to any #zoning lot# containing #buildings# used for:~~

~~(i) ambulatory diagnostic or treatment health care facilities, as listed in Section 22-14 (Use~~

~~Group 4), except where such #zoning lot# contains #buildings# used for hospitals or nursing homes as defined in the New York State Hospital Code; or~~

~~(ii) child care service as listed under the definition of #school# in Section 12-10 (DEFINITIONS), except where such #zoning lot# contains #buildings# used for houses of worship or, for #zoning lots# that do not contain #buildings# used for houses of worship, where the amount of #floor area# used for child care services is equal to 25 percent or less of the amount of #floor area# permitted for #community facility use# on the #zoning lot#.~~

~~(2) In lieu thereof, the #residential bulk# regulations of Article II, Chapter 3 (Bulk Regulations for Residential Buildings in Residence Districts), shall apply, except that:~~

~~(i) the provisions of Section 23-44 (Permitted Obstructions in Required Yards or Rear Yard Equivalents) shall be modified to prohibit parking spaces of any kind within a #front yard#;~~

~~(ii) in lieu of Sections 23-46 (Minimum Required Side Yards) and 23-66 (Required Side and Rear Setbacks), Sections 24-35 (Minimum Required Side Yards) and 24-55 (Required Side and Rear Setbacks) shall apply; and~~

~~(iii) for child care services in R1 and R2 Districts, the provisions of paragraph (9) in the definition of #floor area# in Section 12-10, pertaining to #floor area# exclusions for the lowest story of a #residential building#, shall not apply.~~

**24-012**

**Exceptions to the bulk provisions of this Chapter**

**~~Quality Housing Program~~**

R1 R2 R3 R4 R5 R6 R7 R8 R9 R10

(a) #Buildings# used partly for #community facility uses#

Except as provided in paragraph (b) of this Section, in R3A, R3X, R3-1, R4A, R4-1, R4B or R5B Districts, the #bulk# regulations of this Chapter shall apply only to a #zoning lot# or portion of a #zoning lot# that contains a #community facility building#, and the #bulk# regulations of Article II, Chapter 3, shall apply to any #zoning lot# or portion of a #zoning lot# that contains any #building# that is used partly for #community facility use# and partly for #residential use#. In such districts, the #bulk# regulations of this Chapter may apply to the #community facility# portion of a #building# that is used partly for #community facility use# and partly for #residential use# only where:

(1) such #community facility use# has received tax-exempt status from the New York City Department of Finance, or its successor, pursuant to Section 420 of the New York State Real Property Tax Law; or

(2) such #building# has received an authorization pursuant to Section 24-04 (Modifications of Bulk Regulations in Certain Districts).

(b) #Buildings# containing certain #community facility uses# in #lower density growth management areas#

(1) In R1 through R5 Districts in #lower density growth management areas#, the #bulk# regulations of this Chapter shall not apply to any #zoning lot# containing #buildings# used for:

(i) ambulatory diagnostic or treatment health care facilities, as listed in Section 22-14 (Use Group 4), except where such #zoning lot# contains #buildings# used for hospitals or #long-term care facilities#~~;~~ or

(ii) child care service as listed under the definition of #school# in Section 12-10 (DEFINITIONS), except where such #zoning lot# contains #buildings# used for houses of worship or, for #zoning lots# that do not contain #buildings# used for houses of worship~~,~~ but where the amount of #floor area# used for child care services is equal to 25 percent or less of the amount of #floor area# permitted for #community facility use# on the #zoning lot#.

(2) In lieu thereof, the #residential bulk# regulations of Article II, Chapter 3 (Bulk Regulations for Residential Buildings in Residence Districts), shall apply, except that:

(i) the provisions of Section 23-44 (Permitted Obstructions in Required Yards or Rear Yard Equivalents) shall be modified to prohibit parking spaces of any kind within a #front yard#;

(ii) in lieu of Sections 23-46 (Minimum Required Side Yards) and 23-66 (Required Side and Rear Setbacks), Sections 24-35 (Minimum Required Side Yards) and 24-55 (Required Side and Rear Setbacks) shall apply; and

(iii) for child care services in R1 and R2 Districts, the provisions of paragraph (9) in the definition of #floor area# in Section 12-10, pertaining to #floor area# exclusions for the lowest story of a #residential building#, shall not apply.

(c) Special Provisions for Certain #Community Facility Uses#

Special provisions for #buildings# containing #long-term care facilities# or philanthropic or non-profit institutions with sleeping accommodations, as listed in Use Group 3, are set forth in Section 24-013.

(d) #Quality Housing buildings#

For #Quality Housing buildings#, the provisions of Section 24-011 shall apply, except that:

(1) for #community facility buildings# in Community District 7 and Community District 8 in the Borough of Manhattan, special #floor area ratios# are set forth in Section 24-10 (FLOOR AREA AND LOT COVERAGE REGULATIONS);

(2) for houses of worship in R8A, R8X, R9A, R9X, R10A and R10X Districts as well as for such #uses# in #Quality Housing buildings# in other R8 through R10 Districts, the #street wall# location provisions of Section 23-661 need not apply; and

(3) All obstructions listed in Section 24-33 (Permitted Obstructions in Required Yards or Rear Yard Equivalents) shall be permitted in required #yards# or #rear yard equivalents# for #community facility buildings# or portions of #buildings# containing #community facility uses#.

~~In R6A, R6B, R7A, R7B, R7D, R7X, R8A, R8B, R8X, R9A, R9D, R9X, R10A or R10X Districts, any #community facility building# or portion thereof shall comply with the applicable provisions of Article II, Chapter 8. In R5D Districts, certain provisions of Article II, Chapter 8, shall apply as set forth in Section 28-01 (Applicability of this Chapter).~~

~~In other R6, R7, R8, R9 or R10 Districts, any #community facility# portion of a #Quality Housing building# shall comply with the applicable provisions of Article II, Chapter 8.~~

**24-013**
**Special provisions for certain community facility uses**

The provisions of this Section shall apply to #buildings# containing #long-term care facilities# or philanthropic or non-profit institutions with sleeping accommodations, as listed in Use Group 3.

(a) #Buildings# containing #long-term care facilities#

(1) In R1 and R2 Districts

In R1 and R2 Districts, where a #long-term care facility# is authorized by the City Planning Commission pursuant to the provisions of Section 22-42, or permitted pursuant to Section 74-901, the #bulk# regulations of this Chapter shall apply. The maximum #floor area ratio# for such #long-term care facilities# shall not exceed the applicable #floor area ratio# of paragraph (a) of Section 24-111 (Maximum floor area ratio for certain community facility uses), except as permitted by the City Planning Commission pursuant to Section 74-902.

(2) In R3 through R5 Districts

In R3 through R5 districts, except R3A, R3X, R3-1, R4A, R4B, R4-1, R5A, and R5D districts,

the #bulk# regulations of Article II, Chapter 3 applicable to #affordable independent residences for seniors#, inclusive, shall apply to #buildings# containing #long-term care facilities#. However, the City Planning Commission may permit the #bulk# regulations of this Chapter to apply pursuant to the special permit in Section 74-903 (Certain community facility uses in R3 to R9 Districts and certain Commercial Districts).

In R3A, R3X, R3-1, R4A, R4B, R4-1, R5A, and R5D districts, the #bulk# regulations of this Chapter shall apply to #community facility buildings#, or the #community facility# portion of a #building# containing #long term care facilities#, as applicable. The maximum #floor area ratio# for such #long-term care facilities# shall not exceed the applicable #floor area ratio# of paragraph (b) of Section 24-111, except as permitted by the City Planning Commission pursuant to Section 74-903.

(3) In R6 through R10 districts

In R6 through R10 districts, the #bulk regulations# for #Quality Housing buildings# in Article II, Chapter 3 applicable to #affordable independent residences for seniors#, inclusive, shall apply to #buildings# containing #long-term care facilities#.

In R6 through R10 districts without letter suffixes, the City Planning Commission may permit the #bulk# regulations of this Chapter to apply to such #long-term care facilities# pursuant to the special permit in Section 74-903.

(b) #Buildings# containing philanthropic or non-profit institutions with sleeping accommodations

(1) In R1 and R2 Districts

In R1 and R2 Districts the maximum #floor area ratio# for a #community facility building#, or portion thereof, that contains a philanthropic or non-profit institution with sleeping accommodations, shall not exceed the applicable #floor area ratio# of paragraph (a) of Section 24-111, except as permitted by the City Planning Commission pursuant to Section 74-902.

(2) In R3 through R5 Districts and R6 through R10 Districts without a letter suffix

In R3 through R5 Districts and R6 through R9 Districts without a letter suffix, the maximum #floor area ratio# for a #community facility building#, or portion thereof, that contains a philanthropic or non-profit institution with sleeping accommodations, shall not exceed the applicable #floor area ratio# of paragraph (b) of Section 24-111, except as permitted by the City Planning Commission pursuant to Section 74-903. In addition, for #zoning lots# in R3-2, R4, R5, R6 and R7-1 Districts, except for R4A, R4B, R4-1, R5D and R6B Districts, with #buildings# containing both #residential uses# and philanthropic or non-profit institutions with sleeping accommodations, the provisions of Section 24-162 shall not apply. In lieu thereof, the provisions of Section 24-161 shall apply.

In R10 Districts without a letter suffix, the maximum #floor area ratio# for a #community facility building#, or portion thereof, that contains a philanthropic or non-profit institution with sleeping accommodations shall be as set forth in 24-11.

In R6 through R10 Districts without a letter suffix, the height and setback regulations for #Quality Housing buildings# set forth in Article II, Chapter 3, may be applied.

(3) In R6 through R10 Districts with a letter suffix

In R6 through R10 Districts with a letter suffix, the #bulk# regulations for #Quality Housing buildings# set forth in Article II, Chapter 3 shall apply, inclusive.

(c) Applicability of Quality Housing Program elements

For all #buildings# containing #long-term care facilities# that utilize the #bulk# regulations for #affordable independent residences for seniors# in Article II, Chapter 3, and for #buildings# containing philanthropic or non-profit institutions with sleeping accommodations that utilize the #bulk# regulations for #Quality Housing buildings# in Article II, Chapter 3 in R6 through R10 Districts with a letter suffix, or the height and setback regulations for #Quality Housing buildings# in Article II, Chapter 3 in R6 through R10 Districts without a letter suffix, the Quality Housing Program, and the associated mandatory and optional program elements, shall apply to such #uses#, as modified by paragraph (d) of Section 28-01 (Applicability of this Chapter).

* * *

**24-10**
**FLOOR AREA AND LOT COVERAGE REGULATIONS**

In all districts the #floor area# and #lot coverage# regulations of this Section 24-10, inclusive, shall apply as follows:

For any #zoning lot#, the maximum #floor area ratio# and maximum percent of #lot coverage# for a #community facility use# shall not exceed the #floor area ratio# and #lot coverage# set forth in Section 24-11 (Maximum Floor Area Ratio and Percentage of Lot Coverage), except as otherwise provided in the following Sections:

Section 24-111 (Maximum floor area ratio for certain community facility uses)

Section 24-112 (Special floor area ratio provisions for certain areas)

Section 24-13 (Floor Area Bonus for Deep Front and Wide Side Yards))

Section 24-14 (Floor Area Bonus for a Public Plaza)

Section 24-15 (Floor Area Bonus for Arcades)

Section 24-17 (Special Provisions for Zoning Lots Divided by District Boundaries).

The #floor area# and #lot coverage# regulations set forth in Sections 24-11 through 24-17, inclusive, shall not apply to any #building# containing a #community facility use# in R6A, R6B, R7A, R7B, R7D, R7X, R8A, R8B, R8X, R9A, R9D, R9X, R10A or R10X Districts. In lieu thereof, any such #building# in such districts shall comply with the #floor area# and #lot coverage# regulations for #Quality Housing buildings# set forth in Article II, Chapter 3, except that in R8B Districts within Community District 8, Borough of Manhattan, the maximum #floor area ratio# shall be 5.10, and in R10A and R10X Districts within Community District 7, Borough of Manhattan, the maximum #floor area ratio# shall not exceed 10.

Where #floor area# in a #building# is shared by multiple #uses#, the #floor area# for such shared portion shall be attributed to each #use# proportionately, based on the percentage each #use# occupies of the total #floor area# of the #zoning lot# less any shared #floor area#.

**24-11**
**Maximum Floor Area Ratio and Percentage of Lot Coverage**

R1 R2 R3 R4 R5 R6 R7 R8 R9 R10

~~In all districts, as indicated,~~ In R1 through R5 Districts, and in R6 through R10 Districts without a letter suffix, for any #zoning lot#, the maximum #floor area ratio# and maximum percent of #lot coverage# for a #community facility use# shall not exceed the #floor area ratio# and #lot coverage# set forth in the table in this Section.~~, except as otherwise provided in the following Sections:~~

~~Section 24-13 (Floor Area Bonus for Deep Front and Wide Side Yards))~~

~~Section 24-14 (Floor Area Bonus for a Public Plaza)~~

~~Section 24-15 (Floor Area Bonus for Arcades)~~

~~Section 24-17 (Special Provisions for Zoning Lots Divided by District Boundaries).~~

Any given #lot area# shall be counted only once in determining the #floor area ratio#.

Notwithstanding any other provision of this Resolution, the maximum #floor area ratio# in an R9 or R10 District shall not exceed 12.0.

~~In R9A, R9D, R9X, R10A and R10X Districts, the bonus provisions of Sections 24-14 (Floor Area Bonus for a Public Plaza) and 24-15 (Floor Area Bonus for Arcades) shall not apply and the maximum #floor area ratio# shall not exceed that set forth in the following table:~~

MAXIMUM FLOOR AREA AND MAXIMUM LOT COVERAGE
#Lot coverage# (percent of #lot area#)

| #Floor Area Ratio# | #Corner Lot# | #Interior Lot# or #Through Lot# | District |
|---|---|---|---|
| 1.00 | 60 | 55 | R1 |
| 1.00 | 60 | 55 | R2 |
| 1.00 | 60 | 55 | R3 |
| 2.00 | 60 | 55 | R4 |
| 2.00 | 60 | 55 | R5 R5A R5B |
| 4.80 | 70 | 65 | R6 |
| ~~3.00~~ | ~~80~~ | ~~60~~ | ~~R6A~~ |
| 2.00 | 80 | 60 | R5D ~~R6B~~ |
| 4.80 | 70 | 65 | R7-1 |
| 6.50 | 70 | 65 | R7-2 |
| ~~4.00~~ | ~~80~~ | ~~65~~ | ~~R7A~~ |
| ~~3.00~~ | ~~80~~ | ~~65~~ | ~~R7B~~ |
| ~~4.20~~ | ~~80~~ | ~~65~~ | ~~R7D~~ |
| ~~5.00~~ | ~~80~~ | ~~70~~ | ~~R7X~~ |
| 6.50 | 75 | 65 | R8 |
| ~~6.50~~ | ~~80~~ | ~~70~~ | ~~R8A~~ |
| ~~4.00~~ | ~~80~~ | ~~70~~ | ~~R8B*~~ |

| | | | |
|---|---|---|---|
| ~~6.00~~ | ~~80~~ | ~~70~~ | ~~R8X~~ |
| 10.00 | 75 | 65 | R9 |
| ~~7.50~~ | ~~80~~ | ~~70~~ | ~~R9A~~ |
| ~~9.00~~ | ~~80~~ | ~~70~~ | ~~R9D~~ |
| ~~9.00~~ | ~~80~~ | ~~70~~ | ~~R9X~~ |
| 10.00 | 75 | 65 | R10 |
| ~~10.00~~ | ~~100~~ | ~~70~~ | ~~R10A R10X~~ |

~~* In R8B Districts, within the boundaries of Community Board 8 in the Borough of Manhattan, the maximum #floor area ratio# on a #zoning lot# containing #community facility uses# exclusively shall not exceed 5.10~~

However, the #floor area ratios# listed in this table shall not apply to #community facility uses# that are subject to the provisions of Section 24-111 (Bulk regulations for certain community facility uses).

~~Within the boundaries of Community District 7 in the Borough of Manhattan, all #zoning lots# in R10 Districts, except R10A or R10X Districts, shall be limited to a maximum #floor area ratio# of 10.0.~~

In R9 or R10 Districts, the bonus provisions of Sections 24-14 (Floor Area Bonus for a Public Plaza) or 24-15 (Floor Area Bonus for Arcades) shall apply only to a #development# or #enlargement# with 25 percent or less of the total #floor area# of the #building# in #residential use#.

**24-111**
**Maximum floor area ratio for certain community facility uses**

The provisions of this Section shall apply to #zoning lots# with #buildings# containing #long-term care facilities# or philanthropic or non-profit institutions with sleeping accommodations, as listed in Use Group 3.

R1 R2

(a) In the districts indicated, for any #zoning lot# containing #community facility uses# other than those #uses# for which a permit is required pursuant to Sections 22-21 (By the Board of Standards and Appeals), 73-12 (Community Facility Uses in R1, R2, R3A, R3X, R3-1, R4A, R4B, or R4-1 ~~R1 or R2~~ Districts) and 73-13 (Open Uses in R1 or R2 Districts), or where #bulk# modification is authorized pursuant to Section 74-901 (Long-term Care Facilities in R1 and R2 Districts and certain Commercial Districts ~~Bulk modifications for certain community facility uses~~), the maximum #floor area ratio# shall

not exceed the #floor area# permitted for #residential uses# by the applicable district regulations. The provisions of this paragraph shall not apply to #buildings# for which plans were filed with the Department of Buildings prior to November 15, 1972, including any subsequent amendments thereof.

R3 R4 R5 R6 R7 R8 R9

(b) In R3 through R9 districts, the maximum #floor area ratio# on a #zoning lot# for philanthropic or non-profit institutions with sleeping accommodations, and in R3A, R3X, R3-1, R4A, R4B, R4-1, R5A, and R5D Districts, the maximum #floor area ratio# on a #zoning lot# for #long-term care facilities# shall be as set forth in the table in this Section. Such maximum #floor area ratio# may be modified by special permit of the City Planning Commission pursuant to Section 74-903 (Certain community facility uses in R3 to R9 Districts and certain Commercial Districts).

~~In the districts indicated, the maximum #floor area ratio# on a #zoning lot# for the following #community facility uses# as listed in Use Group 3:~~

~~(1) nursing homes, health-related facilities or domiciliary care facilities for adults, each of which have secured certification by the appropriate governmental agency;~~

~~(2) sanitariums; or~~

~~(3) philanthropic or non-profit institutions with sleeping accommodations;~~

~~shall be as set forth in the table in this Section, except where such #floor area ratio# is modified pursuant to Section 74-902 (Bulk modifications for certain community facility uses).~~

~~The provisions of paragraph (b) of this Section are not applicable in R8B Districts in Community Board 8 in the Borough of Manhattan.~~

MAXIMUM FLOOR AREA RATIO FOR
CERTAIN COMMUNITY FACILITY USES

| District | Maximum #Floor Area Ratio# Permitted |
|---|---|
| R3 | 0.50 |
| R4 | 0.75 |
| R5 R5A R5B | 1.27 |
| R5D ~~R6B~~ | 2.00 |

| | |
|---|---|
| R6 | 2.43 |
| ~~R6A R7B~~ | ~~3.00~~ |
| R7 | 3.44 |
| ~~R7D~~ | ~~4.20~~ |
| ~~R7X~~ | ~~5.00~~ |
| ~~R7A R8B~~ | ~~4.00~~ |
| R8 ~~R8A~~ | 6.02 |
| ~~R8X~~ | ~~6.00~~ |
| R9 | 7.52 |
| ~~R9A~~ | ~~7.50~~ |
| ~~R9D~~ | ~~9.00~~ |
| ~~R9X~~ | ~~9.00~~ |

**24-112**
**Special floor area ratio provisions for certain areas**

The #floor area ratio# provisions of Section 24-11 (Maximum Floor Area Ratio and Percentage of Lot Coverage), inclusive, shall be modified for certain areas, as follows: Within the boundaries of Community District 7 in the Borough of Manhattan, all #zoning lots# in R10 Districts shall be limited to a maximum #floor area ratio# of 10.0.

**24-113 ~~24-112~~**
**Existing public amenities for which floor area bonuses have been received**

* * *

**24-13**
**Floor Area Bonus for Deep Front and Wide Side Yards**

R3 R4 R5

In the districts indicated, except R5D Districts, the maximum #floor area ratio# set forth in Section 24-11 (Maximum Floor Area Ratio and Percentage of Lot Coverage) may be increased to the #floor area ratio# set forth in the table in this Section, if #yards# are provided as follows:

* * *

However, the provisions of this Section shall not apply to ~~nursing homes, health-related facilities, domiciliary care facilities for adults, sanitariums and~~ philanthropic or non-profit institutions with sleeping accommodations and #long-term care facilities#.

* * *

**24-16**
**Special Provisions for Zoning Lots Containing Both Community Facility and Residential Uses**
R1 R2 R3 R4 R5 R6 R7 R8 R9 R10

~~In all districts, as indicated,~~ In R1 through R5 Districts, and in R6 through R10 Districts without a letter suffix, the provisions of this Section shall apply to any #zoning lot# containing #community facility# and #residential uses#.

**24-161**
**Maximum floor area ratio for zoning lots containing community facility and residential uses**

R1 R2 R3-1 R3A R3X R4-1 R4A R4B R5D R6 ~~R6A R6B~~ R7-2 ~~R7A R7B R7D R7X~~ R8 R9 R10

In the districts indicated, for #zoning lots# containing #community facility# and #residential uses#, the maximum #floor area ratio# permitted for a #community facility use# shall be as set forth in Section 24-11, inclusive, and the maximum #floor area ratio# permitted for a #residential use# shall be as set forth in Article II, Chapter 3, provided the total of all such #floor area ratios# does not exceed the greatest #floor area ratio# permitted for any such #use# on the #zoning lot#.

In #Inclusionary Housing designated areas#, except within Waterfront Access Plan BK-1 and in R6 Districts without a letter suffix in Community District 1, Brooklyn, the maximum #floor area ratio# permitted for #zoning lots# containing #community facility# and #residential uses# shall be the base #floor area ratio# set forth in Section 23-154 (Inclusionary Housing) ~~Section 23-952~~ for the applicable district. Such base #floor area ratio# may be increased to the maximum #floor area ratio# set forth in such Section only through the provision of #affordable income housing# pursuant to Section 23-90 (INCLUSIONARY HOUSING).

**24-162**

**Maximum floor area ratios and special floor area limitations for zoning lots containing residential and community facility uses in certain districts**

R3-2 R4 R5 R6 R7-1

In the districts indicated, except R4A, R4B, R4-1~~,~~ and R5D~~, R6A and R6B~~ Districts, the provisions of this Section shall apply to any #zoning lot# containing #community facility# and #residential use#. However, this Section shall not apply to #buildings# containing #residences# and philanthropic or non-profit residences with sleeping accommodations, as set forth in Section 24-013 (Special Provisions for Certain Community Facility Uses).

* * *

**24-163**
**Open space ratio for residential portion**

~~R1 R2 R3 R4 R5~~ R6 R7 R8 R9

In the districts indicated, the #zoning lots# containing #residences# shall have a minimum #open space ratio# as required under the provisions of Article II, Chapter 3. For the purposes of this Section:

* * *

**24-164**
**Location of open space for residential portion**

R1 R2 R3 R4 R5 R6 R7 R8 R9

~~(a)~~ In the districts indicated, the #open space# required for the #residential# portion of the #building# under the provisions of Article II, Chapter 3, may be at a level higher than 23 feet above #curb level#. Such #open space# may be provided at ground floor level or upon the roof of the #community facility# portion of such #building#, provided that the level of any #open space# may not be higher than two and one half feet below the sill level of any #legally required window# opening on such roof area, in the #residential# portion of such #building#. #Open space# located on the roof of a #community facility building# separated by open area from #residential# or #mixed buildings# on the same #zoning lot# may not be at a level higher than 23 feet above #curb level#. For the purposes of this Section ~~paragraph, (a)~~, #abutting buildings# on a single #zoning lot# may be considered to be a single #building#.

~~R6A R6B R7A R7B R7D R7X R8A R8B R8X R9A R9D R9X R10A R10X~~

~~(b) In the districts indicated, and in other R6, R7, R8, R9 or R10 Districts, the provisions of Section 28-30 (RECREATION SPACE AND PLANTING AREAS) shall apply to #Quality Housing buildings#.~~

*  *  *

**24-20**
**APPLICABILITY OF DENSITY REGULATIONS TO ZONING LOTS CONTAINING BOTH RESIDENTIAL AND COMMUNITY FACILITY USES**

In all districts, the maximum number of #dwelling units# ~~or #rooming units#~~ on a #zoning lot# containing both #community facility# and #residential uses# shall be as set forth in Section 23-24 (Special Provisions for Buildings Containing Multiple Uses). ~~equal the maximum #residential floor area# permitted on such #zoning lot# determined in accordance with the provisions set forth in Section 24-16 (Special Provisions for Zoning Lots Containing Both Community Facility and Residential Uses) divided by the applicable factor in Section 23-20 (DENSITY REGULATIONS)~~.

**24-30**
**YARD REGULATIONS**

**General Provisions**

**24-31**
**Applicability of Yard Regulations**

R1 R2 R3 R4 R5 R6 R7 R8 R9 R10

In all districts, as indicated, #yards# shall be provided as set forth in Sections 24-30 (YARD REGULATIONS) and 24-40 (SPECIAL PROVISIONS FOR ZONING LOTS DIVIDED BY DISTRICT BOUNDARIES), inclusive. However, in R6A, R6B, R7A, R7B, R7D, R7X, R8A, R8B, R8X, R9A, R9D, R9X, R10A or R10X Districts, any #building# shall comply with the #yard# regulations for #Quality Housing buildings# set forth in Article II, Chapter 3.

For #zoning lots# with #residential# and #community facility uses#, #front yards# shall be provided pursuant to Article II, Chapter 3, where applicable, and #side yards# and #rear yards# shall be provided in accordance with this Chapter. Section 23-463 (Maximum aggregate width of street walls) shall apply to #zoning lots# with #residential# and #community facility uses#.

For the #residential# portion of a #building# with both #residential# and #community facility uses#, the required #residential rear yard# shall be provided at the floor level of the lowest #story# used for #dwelling units# or #rooming units#, where any window of such #dwelling units# or ~~#rooming units#~~ faces onto such #rear yard#.

*  *  *

**24-33**
**Permitted Obstructions in Required Yards or Rear Yard Equivalents**

In all #Residence Districts#, the following obstructions shall be permitted when located within a required #yard# or #rear yard equivalent#:

(a) In any #yard# or #rear yard equivalent#:

*  *  *

(b) In any #rear yard# or #rear yard equivalent#:

(1) Balconies, unenclosed, subject to the provisions of Section 24-165;

*  *  *

(5) Greenhouses, #accessory#, non-commercial, limited to one #story# or 15 ~~14~~ feet in height above natural grade level, whichever is less, and limited to an area not exceeding 25 percent of a required #rear yard# or #rear yard equivalent# on a #zoning lot#;

(6) Parking spaces, off-street, #accessory# to a #community facility use#, provided that the height of an #accessory building#, or portion of a #building# used for such purposes, shall not exceed 15 ~~14~~ feet above #curb level#. However, such #accessory building# or portion of a #building# shall not be a permitted obstruction in R1, R2, R3A, R3X, R3-1, R4A, R4B or R4-1 Districts;

*  *  *

**24-38**
**Special Provisions for Through Lots**

*  *  *

**24-381**
**Excepted through lots**

R1 R2 R3 R4 R5 R6 R7 R8 R9 R10

~~(a)~~ In all districts, as indicated, no #rear yard# regulations shall apply to any #through lots# that extend less

than 110 feet in maximum depth from #street# to #street#. However, in R5D Districts, no #rear yard# regulations shall apply to any #zoning lot# that includes a #through lot# portion which is contiguous on one side to two #corner lot# portions, and such #zoning lot# occupies the entire #block# frontage of a #street#.

~~R5D R6A R6B R7A R7B R7D R7X R8A R8B R8X R9A R9D R9X R10A R10X~~

~~(b) In the districts indicated, for all #buildings# and for #Quality Housing buildings# in other R6, R7, R8, R9 and R10 Districts, no #rear yard# regulations shall apply to any #zoning lot# that includes a #through lot# portion that is contiguous on one side to two #corner lot# portions, and such #zoning lot# occupies the entire #block# frontage of a #street#.~~

**24-382**
**Required rear yard equivalents**

R1 R2 R3 R4 R5 R6 R7 R8 R9 R10

In all districts, as indicated, on any #through lot# 110 feet or more in maximum depth from #street# to #street#, one of the following #rear yard equivalents# shall be provided:

* * *

However, in R5D~~, R6A, R6B, R7A, R7B, R7D, R7X, R8A, R8B, R8X, R9A, R9D, R9X, R10A and R10X Districts, and for #Quality Housing buildings# in other R6 through R10~~ Districts on any #through lot# at least 180 feet in depth from #street# to #street#, a #rear yard equivalent# shall be provided only as set forth in paragraph (a) of this Section.

* * *

**24-50**
**HEIGHT AND SETBACK REGULATIONS**

In all districts the height and setback regulations of this Section 24-50, inclusive, shall apply as follows:

Height and setback regulations applicable to R1 through R5 Districts, except R5D districts, are set forth in Section 24-521 (Front setbacks in districts where front yards are required). In R5D Districts, all #buildings or other structures# shall comply with the applicable height and setback requirements set forth in Section 23-60 (HEIGHT AND SETBACK REGULATIONS).

In R6A, R6B, R7A, R7B, R7D, R7X, R8A, R8B, R8X, R9A, R9D, R9X, R10A or R10X Districts, any #building# shall comply with the height and setback regulations for #Quality Housing buildings# set forth in

Article II, Chapter 3. In R6, R7, R8, R9 or R10 Districts without a letter suffix, if the #residential# portion of a #building# containing a #community facility use# is #developed# or #enlarged# pursuant to the Quality Housing Program, the entire #building# shall comply with the applicable height and setback regulations for #Quality Housing buildings# set forth in Article II, Chapter 3. For other #buildings# in R6 through R10 districts without a letter suffix utilizing the provisions of this Chapter, height and setback regulations are set forth in Sections 24-522 (Front setbacks in districts where front yards are not required), 24-53 (Alternate Front Setbacks) and 24-54 (Tower Regulations), as applicable.

In all districts, supplemental provisions are set forth in Section 24-55 (Required Side and Rear Setbacks), 24-56 (Special Height and Setback Provisions for Certain Areas), 24-57 (Modifications of Height and Setback Regulations), 24-58(Special Provisions for Zoning Lots Divided by District Boundaries) and 24-59 (Special Height Limitations), respectively.

* * *

**Basic Regulations**

**24-52**
**Maximum Height of Walls and Required Setbacks**

* * *

**24-521**
**Front setbacks in districts where front yards are required**

R1 R2 R3 R4 R5

In the districts indicated, except R5D Districts, where #front yards# are required, the front wall or any other portion of a #building or other structure# shall not penetrate the #sky exposure plane# set forth in the following table:

* * *

**24-522**
**Front setbacks in districts where front yards are not required**

R6 R7 R8 R9 R10

~~(a)~~ In the districts indicated without a letter suffix, for #buildings# other than #Quality Housing buildings#, ~~except for #Quality Housing buildings# and except as set forth in paragraph (b) of this Section,~~ if the front wall or other portion of a #building or other structure# is located at the #street line# or within the #initial setback distance# set forth in the table in this Section, the height of such front wall or other portion of a #building or other structure# shall not exceed the maximum height above #curb level# set forth in the table. Above such specified maximum height and beyond the #initial setback distance#, the

#building or other structure# shall not penetrate the #sky exposure plane# set forth in the table:

* * *

~~R6A R6B R7A R7B R7D R7X R8A R8B R8X R9A R9D R9X R10A R10X~~

~~(b) In the districts indicated, for all #buildings or other structures#, the provisions of this Section, Section 24-53 (Alternate Front Setbacks) and Section 24-54 (Tower Regulations) shall not apply. In lieu thereof, the provisions of Section 23-633 (Street wall location and height and setback regulations in certain districts) shall apply.~~

~~**24-523**~~
~~**Special height and setback regulations**~~

~~R5D R8 R10~~

~~(a) Community District 7, Manhattan~~

~~Within the boundaries of Community District 7 in the Borough of Manhattan, all #buildings or other structures# located in R10 Districts, except R10A or R10X Districts, shall comply with the requirements of Section 23-634 (Special height and setback regulations in R10 Districts within Community District 7, Borough of Manhattan).~~

~~(b) Community District 9, Manhattan~~

~~Within the boundaries of Community District 9 in the Borough of Manhattan, all #buildings# located in R8 Districts north of West 125th Street shall be #developed# or #enlarged# pursuant to the #residential bulk# regulations of the Quality Housing Program.~~

~~(c) R5D Districts~~

~~In R5D Districts, all #buildings or other structures# shall comply with the height and setback requirements set forth in Section 23-60 (HEIGHT AND SETBACK REGULATIONS).~~

**24-53**
**Alternate Front Setbacks**

R6 R7 R8 R9 R10

~~(a)~~ In the districts indicated <u>without a letter suffix, for #buildings# other than #Quality Housing buildings#,</u>

~~except for #Quality Housing buildings# and except as set forth in paragraph (b) of this Section,~~ if an open area is provided along the full length of the #front lot line# with the minimum depth set forth in the following table, the provisions of Section 24-52 (Maximum Height of Walls and Required Setbacks) shall not apply. The minimum depth of such an open area shall be measured perpendicular to the #front lot line#. However, in such instances, except as otherwise provided in Sections 24-51 (Permitted Obstructions) or 24-54 (Tower Regulations), no #building or other structure# shall penetrate the alternate #sky exposure plane# set forth in the table, and the #sky exposure plane# shall be measured from a point above the #street line#.

* * *

~~R6A R6B R7A R7B R7D R7X R8A R8B R8X R9A R9D R9X R10A R10X~~

~~(b) In the districts indicated, for all #buildings or other structures#, the provisions of this Section shall not apply.~~

**24-54**
**Tower Regulations**

R7-2 R8 R9 R10

(a) In the districts indicated without a letter suffix, for #buildings# other than #Quality Housing buildings#, ~~except for #Quality Housing buildings#, and~~ except as set forth in paragraph (b) of this Section, any portion or portions of #buildings# which in the aggregate occupy not more than 40 percent of the #lot area# of a #zoning lot# or, for #zoning lots# of less than 20,000 square feet, the percentage set forth in the table in this Section, may penetrate an established #sky exposure plane# in accordance with the provisions of this Section. (Such portion of a #building# that penetrates a #sky exposure plane# is hereinafter referred to as a tower.)

* * *

(b) Inapplicability of tower regulations

R7-2 R8 R9 R10

~~(1)~~ In the districts indicated, the provisions of this Section shall not apply to any #development# or #enlargement# located wholly or partly in a #Residence District# that is within 100 feet of a #public park# with an area of one acre or more, or a #street line# opposite such a #public park#.

~~R8A R8B R8X R9A R9D R9X R10A R10X~~

~~(2) In the districts indicated, for all #buildings or other structures#, the provisions of this Section shall not apply.~~

*  *  *

**24-55**
**Required Side and Rear Setbacks**

*  *  *

**24-552**
**Required rear setbacks for tall buildings**

R1 R2 R3 R4 R5 R6 R7 R8 R9 R10

(a) In all districts~~, as~~ indicated without a letter suffix, for #buildings# other than #Quality Housing buildings#, ~~except as provided in paragraph (b) of this Section,~~ no portion of a #building# more than 125 feet above yard level shall be nearer to a #rear yard line# than 20 feet. However, this provision shall not apply to any portion of a #building# that qualifies as a tower under the provisions of Section 24-54.

*  *  *

~~R6A R6B R7A R7B R7D R7X R8A R8B R8X R9A R9D R9X R10A R10X~~

~~(b) In the districts indicated, for all #buildings# and for #Quality Housing buildings# in other R6 through R10 Districts, no portion of a #building# that exceeds the maximum base height specified in the table in Section 23-633 shall be nearer to a #rear yard line# than 10 feet.~~

~~In the case of a #through lot# on which a #rear yard equivalent# is provided as set forth in paragraph (a) of Section 24-382, the requirements of this Section shall apply as if such #rear yard equivalent# were two adjoining #rear yards#. If a #rear yard equivalent# is provided as set forth in paragraph (b) of Section 24-382, the requirements of this Section shall not apply.~~

**Regulations Applying in Special Situations**

**24-56**
**Special Height and Setback Provisions for Certain Areas ~~Zoning Lots Directly Adjoining Public Parks~~**

R1 R2 R3 R4 R5 R6 R7 R8 R9 R10

(a) For Zoning Lots Directly Adjoining Public Parks

In all districts, as indicated, a #public park# with an area of between one and fifteen acres shall be considered a #wide street# for the purpose of applying the regulations set forth in Section 24-52 (Maximum Height of ~~Front~~ Walls and Required ~~Front~~ Setbacks) to any #building or other structure# on a #zoning lot# adjoining such #public park#. However, the provisions of this Section shall not apply to a #public park# more than 75 percent of which is paved.

(b) Community District 7, Manhattan

Within the boundaries of Community District 7 in the Borough of Manhattan, all #buildings or other structures# located in R10 Districts, shall comply with the requirements of Section 23-672 (Special height and setback regulations in R10 Districts within Community District 7, Borough of Manhattan).

(c) Community District 9, Manhattan

Within the boundaries of Community District 9 in the Borough of Manhattan, all #buildings# located in R8 Districts north of West 125th Street shall be #developed# or #enlarged# pursuant to the #residential bulk# regulations of Section 23-675 (Special height and setback regulations for certain sites in Community District 9, Borough of Manhattan).

* * *

**24-59**
**Special Height Limitations**

* * *

**24-592**
**Height limitations for narrow buildings or enlargements**

R7-2 ~~R7D R7X~~ R8 R9 R10

In the districts indicated, the provisions of Section 23-692 (Height limitations for narrow buildings or enlargements) shall apply to portions of #buildings# with #street walls# less than 45 feet in width.

~~**24-593**~~
~~**Special provisions applying along district boundaries**~~

~~R6 R7 R8 R9 R10~~

~~In the districts indicated, the requirements for R6B Districts in Section 23-633 (Street wall location and height~~

~~and setback regulations in certain districts) shall apply to any portion of a #building# located within 25 feet of the boundary of an R1, R2, R3, R4, R5 or R6B District, if the #building# that contains such portion is:~~

~~(a) within an R6A, R7A, R7B, R7D, R7X, R8A, R8B, R8X, R9A, R9D, R9X, R10A or R10X District; or~~

~~(b) within an R6, R7, R8, R9 or R10 District, without a letter suffix, and any portion of the #zoning lot# is #developed# or #enlarged# pursuant to the Quality Housing Program.~~

* * *

# Article II - Residence District Regulations

**Chapter 5**
**Accessory Off-Street Parking and Loading Regulations**

**Off-street Parking Regulations**

**25-00**
**GENERAL PURPOSES AND DEFINITIONS**

* * *

**25-02**
**Applicability**

* * *

**25-021**
**Applicability of regulations to non-profit hospital staff dwellings**

~~Except as modified in Sections 25-16 (Maximum Spaces for Other than Single-Family Detached Residences) and 25-212 (Parking requirements applicable to non-profit hospital staff dwellings), the district regulations of this Chapter applicable to #residences# shall apply to #non-profit hospital staff dwellings#, and the district regulations of this Chapter applicable to #community facility uses# shall not apply to such #use#.~~ In all districts, the regulations of this Chapter applicable to #community facility uses# shall not apply to #non-profit hospital staff dwellings#. In lieu thereof, the regulations applicable to #residences# shall apply, as follows:

(a) the regulations of an R5 District shall apply to #non-profit hospital staff dwellings# located in R1, R2 and R3 Districts;

(b) the regulations of an R6 District shall apply to #non-profit hospital staff dwellings# located in R4 and R5 Districts; and

(c) the regulations of an R10 District shall apply to #non-profit hospital staff dwellings# located in R6 through R10 Districts.

* * *

**25-025**
**Applicability of regulations to Quality Housing**

On any #zoning lot# containing #residences# in R6A, R6B, R7A, R7B, R7D, R7X, R8A, R8B, R8X, R9A, R9X, R10A or R10X Districts or their #commercial# equivalents, and on any #zoning lot# in other districts containing a

#Quality Housing building#, all #accessory# off-street parking spaces shall comply with the provisions of Section ~~28-50~~ 28-40 (PARKING FOR QUALITY HOUSING).

* * *

**25-027**
**Applicability of regulations in Community District 14, Queens**

In Community District 14 in the Borough of Queens, R6 and R7 Districts shall be subject to the #accessory# off-street parking regulations of an R5 District, except that such requirement shall not apply to any #development# located within an urban renewal area established prior to August 14, 2008, or #income-restricted housing units# as defined in Section 12-10 (DEFINITIONS).

For the purposes of this Section, the #floor area# of a #building# shall not include floor space used for #accessory# off-street parking spaces provided on any #story# located below 33 feet above the #base plane#.

* * *

**25-10**
**PERMITTED ACCESSORY OFF-STREET PARKING SPACES**

* * *

**25-16**
**Maximum Spaces for Other than Single-Family Detached Residences**

R3 R4 R5 R6 R7 R8 R9 R10

In the districts indicated, the provisions of this Section shall apply to all #dwelling units# ~~or #rooming units#~~ in #buildings# containing #residences# other than #Quality Housing buildings# and #single-family detached residences#, except as provided in Section 25-17 (Modification of Maximum Spaces for Other than Single-Family Detached Residences).

~~The provisions of this Section applicable to #residences# in the districts set forth in the following table shall apply as set forth in the table to #non-profit hospital staff dwellings#:~~

~~APPLICABILITY OF PROVISIONS TO~~
~~NON-PROFIT HOSPITAL STAFF DWELLINGS~~

| ~~District whose Regulations are Applicable to #Non-profit Hospital Staff Dwellings#~~ | ~~District in which #Non-profit Hospital Staff Dwelling# is Located~~ |
|---|---|

| | |
|---|---|
| ~~R5~~ | ~~R1 R2 or R3~~ |
| ~~R6~~ | ~~R4 or R5~~ |
| ~~R10~~ | ~~R6 R7 R8 R9 or R10~~ |

**25-161**
**In R3, R4 or R5 Districts**

R3 R4 R5

In the districts indicated, not more than two off-street parking spaces shall be provided for each #dwelling unit#~~, and not more than one off-street parking space shall be provided for each #rooming unit#~~.

* * *

**25-20**
**REQUIRED ACCESSORY OFF-STREET PARKING SPACES FOR RESIDENCES**

**25-21**
**General Provisions**

R1 R2 R3 R4 R5 R6 R7 R8 R9 R10

In all districts, as indicated, #accessory# off-street parking spaces, open or enclosed, shall be provided for all #dwelling units# ~~or #rooming units#~~ created after December 15, 1961, in accordance with the provisions of the following Sections and the other applicable provisions of this Chapter, as a condition precedent to the #use# of such #dwelling unit# ~~or #rooming unit#~~:

| | |
|---|---|
| Section 25-22 | (Requirements Where Individual Parking Facilities Are Provided) |
| Section 25-23 | (Requirements Where Group Parking Facilities Are Provided) |
| Section 25-24 | (Modification of Requirements for Small Zoning Lots) |
| Section 25-25 | (Modification of Requirements for Income-Restricted Housing Units or Affordable Independent Residences for Seniors ~~Public Housing or Housing for Elderly~~) |

Section 25-28 (Special Provisions for Zoning Lots Divided by District Boundaries)

For #dwelling units# or #rooming units# constructed pursuant to the zoning regulations in effect after July 20, 1950, and prior to December 15, 1961, off-street parking spaces #accessory# to such #dwelling units# or #rooming units# cannot be removed if such spaces were required by such zoning regulations, unless such spaces would not be required pursuant to the applicable zoning regulations currently in effect.

~~For the purposes of these Sections, three #rooming units# shall be considered the equivalent of one #dwelling unit#.~~

For the purposes of calculating the number of required parking spaces for any #building# containing #residences#, any fraction of a space 50 percent or greater shall be counted as an additional space.

In the event that the number of #accessory# off-street parking spaces required under the provisions of these Sections exceeds the maximum number of spaces permitted under the provisions of Section 25-16 (Maximum Spaces for Other than Single-Family Detached Residences), the Commissioner of Buildings shall reduce the required number of spaces to the maximum number permitted.

**25-211**
**Application of requirements to conversions and certain enlargements**

* * *

R1 R2 R3 R4 R5 R6 R7-1 R7A R7B R7D R7X

(c) In the districts indicated, the requirements of Section 25-21 (General Provisions) shall not apply to #dwelling units# ~~or #rooming units#~~ created by the change of non-#residential uses# to #residential uses# on #zoning lots# with less than 5,000 square feet of #lot area#.

R7-2 R8 R9 R10

(d) In the districts indicated, no #accessory# off-street parking is required for the creation of additional #dwelling units# ~~or #rooming units#~~ within existing #buildings#.

~~**25-212**~~
~~**Parking requirements applicable to non-profit hospital staff dwellings**~~

~~R1 R2 R3 R4 R5 R6 R7 R8 R9 R10~~

~~In all districts, as indicated, the provisions of Sections 25-21 to 25-28, inclusive, relating to Required Accessory Off-Street Parking Spaces for Residences, shall apply as set forth in this Section to #non-profit hospital staff~~

~~dwellings#. The district regulations of Sections 25-21 to 25-28, inclusive, applicable to #non-profit hospital staff dwellings# are determined in accordance with the following table and are the same as the regulations applicable to #residences# in the districts indicated in the table.~~

~~District Whose Regulations are Applicable~~

| | ~~District~~ |
|---|---|
| ~~R5~~ | ~~R1 R2 R3~~ |
| ~~R6~~ | ~~R4 R5~~ |
| ~~R10~~ | ~~R6 R7 R8 R9 R10~~ |

* * *

**25-23**
**Requirements Where Group Parking Facilities Are Provided**

R1 R2 R3 R4 R5 R6 R7 R8 R9 R10

In all districts, as indicated, where #group parking facilities# are provided, for all new #residences#, #accessory# off-street parking spaces shall be provided for at least that percentage of the total number of #residences# set forth in the following table. Such spaces shall be kept available to the residents of the #building#, in accordance with the provisions of Section 25-41 (Purpose of Spaces and Rental to Non-Residents).

PARKING SPACES REQUIRED WHERE
GROUP PARKING FACILITIES ARE PROVIDED

| ~~Percent of Total #Residences#~~ | ~~District~~ |
|---|---|
| ~~100*~~ | ~~R1 R2 R3 R4A R4-1~~ |
| ~~100~~ | ~~R4 R4B R5A~~ |
| ~~85~~ | ~~R5~~ |
| ~~70**~~ | ~~R6~~ |

| | |
|---|---|
| ~~66~~ | ~~R5B R5D~~ |
| ~~60**~~ | ~~R7-1~~ |
| ~~50**~~ | ~~R6A R6B R7-2 R7A R7B R7D R7X R8B***~~ |
| ~~40~~ | ~~R8 R9 R10~~ |

| District | Percent of Total #Residences# |
|---|---|
| R1 R2 R3 R4A R4-1 | 100[1] |
| R4 R4B R5A | 100 |
| R5 | 85 |
| R6 | 70[2] |
| R5B R5D | 66 |
| R7-1 | 60[2] |
| R6A R6B R7-2 R7A R7B R7D R7X R8B[3] | 50[2] |
| R8 R9 R10 | 40 |

1 In R1, R2, R3, R4A and R4-1 Districts within #lower density growth management areas#, 1.5 #accessory# off-street parking spaces shall be provided for each #dwelling unit#. However, in such districts in the Borough of Staten Island, two #accessory# off-street parking spaces shall be provided for each #single-family residence#, three #accessory# off-street parking spaces shall be provided for each #two-family residence#, and for all other #residences#, #accessory# off-street parking spaces shall be provided for at least 150 percent of the total number of #dwelling units# within such #residences#

2 In R6 or R7 Districts for #residences# created pursuant to the Quality Housing Program, #accessory# off-street parking spaces shall be provided for at least 50 percent of the total number of such #residences#

[3] In the borough of Brooklyn, R8B Districts are subject to the parking requirements applicable in R8 Districts

In a #predominantly built-up area# where #group parking facilities# are provided, #accessory# parking spaces shall be provided for at least that percentage of the total number of #dwelling units# set forth in the following table:

| ~~Percent of Total #Residences#~~ | ~~District~~ |
|---|---|
| ~~66~~ | ~~R4 R5~~ |

| District | Percent of Total #Residences# |
|---|---|
| R4 R5 | 66 |

**25-231**
**Modification of requirements to facilitate affordable housing**

Within the #Transit Zone#, the Board of Standards and Appeals may permit a reduction in the requirements set forth in Section 25-23 in accordance with the provisions of Section 73-433 (Reduction of parking spaces to facilitate affordable housing).

**25-24**
**Modification of Requirements for Small Zoning Lots**

* * *

**25-241**
**Reduced requirements**

R6 R7 R8 R9 R10

In the districts indicated, for #zoning lots# of 10,000 or 15,000 square feet or less, the number of required #accessory# off-street parking spaces is as set forth in the following table:

REDUCED REQUIREMENTS FOR

SMALL ZONING LOTS

| ~~#Lot Area#~~ | ~~Parking Spaces Required as a Percent of Total #Dwelling Units#~~ | ~~District~~ |
|---|---|---|
| ~~10,000 square feet or less~~ | ~~50~~ | ~~R6 R7-1* R7B~~ |
| | ~~30~~ | ~~R7-1 R7A R7D R7X~~ |
| ~~10,001 to 15,000 square feet~~ | ~~30~~ | ~~R7-2~~ |
| | ~~20~~ | ~~R8** R9 R10~~ |

| #Lot Area# | District | Parking Spaces Required as a Percent of Total #Dwelling Units# |
|---|---|---|
| 10,000 square feet or less | R6 R7-1[1] R7B | 50 |
| | R7-1 R7A R7D R7X | 30 |
| 10,001 to 15,000 square feet | R7-2 | 20 |
| | R8[2] R9 R10 | 20 |

[1] Within #lower density growth management areas# in Community District 10, Borough of the Bronx

[2] In R8B Districts, the parking requirements may not be reduced.

* * *

**25-25**
**Modification of Requirements for Income-Restricted Housing Units or Affordable Independent Residences**

**for Seniors** ~~**Public, Publicly-Assisted and Government Assisted Housing or for Non-profit Residences for the Elderly**~~

The requirements set forth in Section 25-23 (Requirements Where Group Parking Facilities Are Provided) shall be modified for #income-restricted housing units#, as defined in Section 12-10 (DEFINITIONS), and further modified where such #income-restricted housing units# are located in an #affordable independent residence for seniors#, in accordance with the provisions of this Section, inclusive. For the purposes of this Section, not more than one #dwelling unit# reserved for occupancy by a superintendent in a #building# otherwise comprised of #income-restricted housing units# shall also be considered an #income-restricted housing unit#.

~~R1 R2 R3 R4 R5 R6 R7 R8 R9 R10~~

~~In all districts, as indicated, #accessory# off-street parking spaces shall be provided for at least that percentage of the total number of #dwelling units# in each category as set forth in the following table, for:~~

~~(a) all #dwelling units# in publicly-assisted housing developments approved by the City Planning Commission which limit maximum tenant income and receive cash and/or interest subsidies under Federal mortgage programs;~~

~~(b) all #dwelling units# in publicly-assisted housing developments approved by the City Planning Commission which limit maximum tenant income and receive rent subsidy contracts under Federal rent subsidy programs, other than such developments owned by or constructed for the New York City Housing Authority which have received "plan" and "project" approval prior to June 30, 1975; and #non-profit residences for the elderly# or #dwelling units# for the elderly;~~

~~(c) all #dwelling units# in low rent public housing developments owned by or constructed for the New York City Housing Authority or other public authority and receiving cash subsidies, or #dwelling units# in new housing developments approved by the City Planning Commission that are reserved for low-income tenants for a period of not less than 40 years at rentals equivalent to rentals in low rent public housing developments receiving cash subsidies;~~

~~(d) #non-profit residences for the elderly# or #dwelling units# in a publicly-assisted or public housing development that are reserved for elderly tenants for a period of not less than 40 years and that comply with the appropriate space requirements for related #accessory# social and welfare facilities set forth in the definition of a #non-profit residence for the elderly# in Section 12-10 (DEFINITIONS); and~~

~~(e) all government assisted #dwelling units# or #rooming units# in developments which receive New York City or New York State assistance to reduce total development cost by $10,000 or 10 percent, whichever is less, and limit maximum tenant income to the income limits established by the United States Department of Housing and Urban Development for New York City mortgagors assisted under Section 235 of the National Housing Act, as amended.~~

~~PARKING SPACES REQUIRED FOR PUBLIC, PUBLICLY-ASSISTED AND GOVERNMENT ASSISTED HOUSING DEVELOPMENTS OR~~

~~NON-PROFIT RESIDENCES FOR THE ELDERLY~~

| ~~Publicly Assisted Housing~~ | ~~Federal Rent Subsidy Programs~~ | ~~Public Housing Developments or #Dwelling Units# for Low Income Tenants~~ | ~~#Non-profit Residences for the Elderly# or #Dwelling Units# for the Elderly~~ | ~~Gov't Assisted Housing~~ | ~~District~~ |
|---|---|---|---|---|---|
| ~~80~~ | ~~65~~ | ~~50.0~~ | ~~***~~ | ~~80~~ | ~~R1 R2~~ |
| ~~80~~ | ~~65~~ | ~~50.0~~ | ~~35.0~~ | ~~80~~ | ~~R3 R4~~ |
| ~~70~~ | ~~56~~ | ~~42.5~~ | ~~31.5~~ | ~~70~~ | ~~R5~~ |
| ~~55~~ | ~~45~~ | ~~35.0~~ | ~~22.5~~ | ~~55~~ | ~~R5D R6**~~ |
| ~~39~~ | ~~32~~ | ~~25.0~~ | ~~16.0~~ | ~~35~~ | ~~R6A R6B R7B~~ |
| ~~45~~ | ~~38~~ | ~~30.0~~ | ~~20.0~~ | ~~45~~ | ~~R7-1**~~ |
| ~~30~~ | ~~23~~ | ~~15.0~~ | ~~12.5~~ | ~~25~~ | ~~R7-2 R7A R7D R7X R8B*~~ |
| ~~30~~ | ~~21~~ | ~~12.0~~ | ~~10.0~~ | ~~25~~ | ~~R8 R8A R8X R9 R10~~ |

~~* In the Borough of Brooklyn, R8B Districts are subject to the parking requirements applicable in R8 Districts~~

~~** For assisted housing projects in R6 or R7-1 Districts which are #Quality Housing buildings#, the applicable district parking requirements shall be as follows:~~

| ~~District~~ | ~~Applicable District Parking Requirement~~ |
|---|---|
| ~~R6~~ | ~~R6A~~ |

~~R7-1~~ ~~R7A~~

~~*** A #non-profit residence for the elderly# is not a permitted #use# in R1 or R2 Districts. See Section 22-12 (Use Group 2)~~

**25-251**
**Income-restricted housing units**

Regulations applicable to #income-restricted housing units#, except where such units are located in an #affordable independent residence for seniors#, are set forth in this Section.

Within the #Transit Zone# no #accessory# off-street parking spaces shall be required for #income-restricted housing units# developed after (date of enactment). Existing required or permitted accessory off-street parking spaces for #income-restricted housing units# existing prior to (date of enactment) shall continue to be subject to the applicable zoning district regulations in effect prior to (date of enactment), except that the Board of Standards and Appeals may waive or modify such requirements in accordance with the provisions of Section 73-434 (Reduction of existing parking spaces for income-restricted housing units).

Outside the #Transit Zone#, #accessory# off-street parking spaces shall be provided for at least that percentage of the total number of #income-restricted housing units# as set forth in the following table:

| District | Parking requirement per #income-restricted housing unit# (Percent) |
|---|---|
| R3-2 R4 | 50.0 |
| R5 R5B | 42.5 |
| R5D | 35.0 |
| R6 R7B | 25.0 |
| R7-1 R7-2 R7A R7D R7X R8B[1] | 15.0 |
| R8 R8A R8X R9 R10 | 12.0 |

[1]In the Borough of Brooklyn, R8B Districts are subject to the parking requirements applicable in R8 Districts

**25-252**
**Affordable Independent Residences for Seniors**

Within the #Transit Zone# no #accessory# off-street parking spaces shall be required for #income-restricted housing units# in an #affordable independent residence for seniors#. Outside the #Transit Zone#, #accessory# off-street parking spaces shall be provided for at least ten percent of the total number of #dwelling units# in an #affordable independent residence for seniors# developed after (date of enactment).

Existing required or permitted accessory off-street parking spaces for #income-restricted housing units# in #affordable independent residences for seniors# outside of the #Transit Zone# existing prior to (date of enactment) shall continue to be subject to the applicable zoning district regulations in effect prior to (date of enactment), except that the Board of Standards and Appeals may waive or modify such requirements in accordance with the provisions of Section 73-435 (Reduction of existing parking for affordable residences for seniors).

**25-26**
**Waiver of Requirements for Small Number of Spaces**

R4B R5B R5D R6 R7 R8 R9 R10

In the districts indicated, the requirements set forth in Section 25-21 (General Provisions) shall be waived if the required number of #accessory# off-street parking spaces resulting from the application of such requirements is no greater than the maximum number as set forth in this Section~~, except that the requirements shall not be waived for #non-profit residences for the elderly#~~.

However, the following provisions shall apply:

(a) in R5D Districts, the provisions of this Section, inclusive, shall only apply to #zoning lots# existing both on June 29, 2006, and on the date of application for a building permit; and

(b) in R6 and R7 Districts in #lower density growth management areas# in Community District 10 in the Borough of the Bronx, the provisions of this Section, inclusive, shall only apply to #zoning lots# existing both on March 25, 2003, and on the date of application for a building permit.

**25-261**
**For developments or enlargements**

R4B R5B R5D R6 R7 R8 R9 R10

For #developments# in R4B and R5B Districts, and for #developments# and #dwelling units# within #enlarged# portions of #buildings# in R5D, R6, R7, R8 R9 and R10 Districts, the maximum number of #accessory# off-street parking spaces for which requirements are waived is set forth in the following table:

| ~~Maximum number of spaces waived~~ | ~~District~~ |
|---|---|
| ~~1~~ | ~~R4B R5B R5D~~ |
| ~~5~~ | ~~R6 R7-1 R7B~~ |
| ~~15~~ | ~~R7-2 R7A R7D R7X R8 R9 R10~~ |

| District | Maximum number of spaces waived |
|---|---|
| R4B R5B R5D | 1 |
| R6 R7-1 R7B | 5 |
| R7-2 R7A R7D R7X R8 R9 R10 | 15 |

* * *

**25-30**
**REQUIRED ACCESSORY OFF-STREET PARKING SPACES FOR PERMITTED NON-RESIDENTIAL USES**

**25-31**
**General Provisions**

R1 R2 R3 R4 R5 R6 R7 R8 R9 R10

* * *

REQUIRED OFF-STREET PARKING SPACES FOR NON-RESIDENTIAL USES

Type of #use#

Parking Spaces Required in Relation
to Specified Unit of Measurement - District

---

FOR COMMUNITY FACILITY USES:

* * *

Philanthropic or non-profit institutions with sleeping accommodations; #Long-term care facilities# ~~all types of nursing homes, health related facilities, domiciliary care facilities or sanitariums~~

None required - R7-2 R7A R7D R7X R8 R9 R10
1 per 10 beds - R1 R2 R3 R4 R5
1 per 20 beds - R6 R7-1 R7B

* * *

**25-33**
**Waiver of Requirements for Spaces below Minimum Number**

R1 R2 R3 R4 R5 R6 R7 R8 R9 R10

In all districts, as indicated, except for the #uses# listed in Section 25-331 (Exceptions to application of waiver provisions), the parking requirements set forth in Sections 25-31 (General Provisions) or 25-32 (Special Provisions for a Single Zoning Lot with Uses Subject to Different Parking Requirements) shall not apply to permitted non-#residential uses# if the total number of #accessory# off-street parking spaces required for all such #uses# on the #zoning lot# is less than the number of spaces set forth in the following table:

| ~~Number of Spaces~~ | ~~Districts~~ |
|---|---|
| ~~10~~ | ~~R1 R2 R3 R4 R5~~ |
| ~~25~~ | ~~R6 R7-1 R7B~~ |
| ~~40~~ | ~~R7-2 R7A R7D R7X R8 R9 R10~~ |

| Number of Spaces | Districts |
|---|---|
| R1 R2 R3 R4 R5 | 10 |

| | |
|---|---|
| R6 R7-1 R7B | 25 |
| R7-2 R7A R7D R7X R8 R9 R10 | 40 |

*  *  *

**25-50**
**RESTRICTIONS ON LOCATION OF ACCESSORY OFF-STREET PARKING SPACES**

*  *  *

**25-52**
**Off-Site Spaces for Residences**

*  *  *

**25-521**
**Maximum distance from zoning lot**

R3 R4 R5 R6 R7 R8 R9 R10

In the districts indicated, all such spaces shall not be further than the distance set forth in the following table from the nearest boundary of the #zoning lot# occupied by the #residences# to which they are #accessory#.

| ~~Maximum Distance from Zoning Lot~~ | ~~District~~ |
|---|---|
| ~~600 feet~~ | ~~R3 R4 R5 R6 R7-1 R7B~~ |
| ~~1,000 feet~~ | ~~R7-2 R7A R7D R7X R8 R9 R10~~ |

| District | Maximum Distance from Zoning Lot |
|---|---|
| R3 R4 R5 R6 R7-1 R7B | 600 feet |
| R7-2 R7A R7D R7X R8 R9 R10 | 1,000 feet |

*  *  *

**25-80**
**BICYCLE PARKING**

*  *  *

**25-81**
**Required Bicycle Parking Spaces**

**25-811**
**Enclosed bicycle parking spaces**

R1 R2 R3 R4 R5 R6 R7 R8 R9 R10

*  *  *

REQUIRED BICYCLE PARKING SPACES FOR RESIDENTIAL OR
COMMUNITY FACILITY USES

| Type of #Use# | Bicycle Parking Spaces Required in Relation to Specified Unit of Measurement |
|---|---|
| FOR RESIDENTIAL USES | |
| Use Group 1 | None required |
| Use Group 2 | 1 per 2 #dwelling units# |
| #Affordable independent residences for seniors# ~~#Non-profit residences for the elderly# or #dwelling units# for the elderly as specified in Section 25-25(d)~~ | 1 per 10,000 square feet of #floor area# |

*  *  *

**25-85**

**Floor Area Exemption**

R1 R2 R3 R4 R5 R6 R7 R8 R9 R10

*  *  *

MAXIMUM BICYCLE PARKING SPACES
EXCLUDED FROM FLOOR AREA

| Type of #Use# | Maximum Bicycle Parking Spaces Excluded from #Floor Area# in Relation to Specified Unit of Measurement |
|---|---|
| FOR RESIDENTIAL USES | |
| #Affordable independent residences for seniors# ~~#Non-profit residences for the elderly# or #dwelling units# for the elderly as specified in Section 25-25(d)~~ | 1 per 2,000 square feet of #floor area# |

*  *  *

# Article II - Residence District Regulations

**Chapter 8**
**The Quality Housing Program**

**28-00**
**GENERAL PURPOSES**

The Quality Housing Program is established to foster the provision of multifamily housing and certain #community facilities# that:

(a) are ~~is~~ compatible with existing neighborhood scale and character;

(b) provide~~s~~ on-site ~~recreation~~ amenity spaces to meet the needs of the residents ~~its occupants~~; and

(c) ~~is~~ are designed to promote the security and safety of the residents.

**28-01**
**Applicability of this Chapter**

The Quality Housing Program is a specific set of standards and requirements that, in conjunction with the #bulk# provisions for #Quality Housing buildings# set forth in Article II, Chapter 3, and Article III, Chapter 5, as applicable, apply to ~~for~~ #buildings# containing #residences#, #long-term care facilities# or philanthropic or non-profit institutions with sleeping accommodations, or some combination thereof, as follows:~~.~~

(a) In R6A, R6B, R7A, R7B, R7D, R7X, R8A, R8B, R8X, R9A, R9D, R9X, R10A or R10X Districts, and in the equivalent #Commercial Districts# listed in Sections 34-111 and 34-112, all such #buildings# shall comply with the Quality Housing Program standards and requirements as set forth in this Chapter. ~~In R5D Districts, only the requirements set forth in Sections 26-41 (Street Tree Planting), 28-2321 (Refuse Storage and Disposal), 28-33 (Planting Areas) and 28-53 (Location of Accessory Parking) shall apply.~~

(b) In other R6, R7, R8, R9 or R10 Districts, and in the equivalent #Commercial Districts# listed in Sections 34-111 and 34-112, ~~#residential developments#, #residential enlargements#, where permitted,~~ all #developments# and #enlargements# of such #buildings# ~~electing to use the optional~~ utilizing the Quality Housing #bulk# regulations in Article II, Chapter 3, shall comply with the Quality Housing Program standards and requirements set forth in this Chapter.

(c) In R5D Districts, only the requirements set forth in Sections 28-12 (Refuse Storage and Disposal), 28-23 (Planting Areas) and 28-43 (Location of Accessory Parking) shall apply.

(d) In R6 through R10 Districts, and in the equivalent #Commercial Districts# listed in Sections 34-111 and

34-112, for #developments# and #enlargements# of #community facility buildings# containing #long-term care facilities# or philanthropic or non-profit institutions with sleeping accommodations, or portions of #buildings# containing such #uses#, where such #building# utilizes the #bulk# regulations for #Quality Housing buildings# in Article II, Chapter 3 in R6 through R10 Districts with a letter suffix, or the height and setback regulations for #Quality Housing buildings# in Article II, Chapter 3 in R6 through R10 Districts without a letter suffix, the Quality Housing Program standards and requirements of this Chapter shall apply, except that the provisions of Sections 28-12 (Refuse Storage and Disposal) shall be optional .

(e) The provisions of Article VII, Chapter 8 (Large-Scale Residential Developments), are not applicable to #Quality Housing buildings#.

(f) The provisions of this Chapter shall not apply to #dwelling units converted# pursuant to Article I, Chapter 5, unless such #conversions# meet the requirements for #residential developments# of Article II (Residence District Regulations).

**28-02**
**Definitions**

Vertical circulation core

A "vertical circulation core" is an elevator core (consisting of one or more elevators) or a central stairwell in a non-elevator #building#.

Dwelling unit

For the purposes of applying the provisions of this Chapter to philanthropic or non-profit institutions with sleeping accommodations and to #long-term care facilities#, the term #dwelling unit# shall include #dwelling units# and #rooming units#, as set forth in the Housing Maintenance Code.

**28-03**
**Quality Housing Program Elements**

The Quality Housing Program consists of four components: ~~neighborhood impact,~~ #building# interior, recreation space and planting, ~~and~~ safety and security, and parking requirements.

~~The neighborhood impact component controls the effect of the #Quality Housing building# on the neighborhood and includes mandatory #bulk# regulations.~~

The #building# interior component ~~sets a minimum size of a #dwelling unit#, mandates~~ sets forth special refuse storage and disposal systems, and encourages laundry facilities and daylight in corridors.

The recreation and planting component establishes minimum space standards for indoor and outdoor recreation space and requires planting of open areas between the front #building# wall and the #street#.

The safety and security component encourages fewer #dwelling units# per corridor.

The parking component screens #accessory# parking spaces from the public realm.

Each #Quality Housing building# shall comply with the mandatory requirements of this Chapter.

~~**28-10**~~
~~**NEIGHBORHOOD IMPACT**~~

~~**28-11**~~
~~**Bulk Regulations**~~

~~The #bulk# regulations for #Quality Housing buildings# are set forth in the provisions applicable to the Quality Housing Program in Article II, Chapter 3; Article II, Chapter 4; Article III, Chapter 4 and Article III, Chapter 5.~~

**28-10** ~~**28-20**~~
**BUILDING INTERIOR**

**28-11** ~~**28-21**~~
**Elevated Ground Floor Units**
~~**Size of Dwelling Units**~~

~~A #dwelling unit# shall have an area of at least 400 square feet of #floor area#.~~

For all #Quality Housing buildings# with entryways at #curb level# that accommodate ramps, stairs, or lifts to #dwelling units# that are elevated above #curb level# on the first #story# of the #building#, up to 100 square feet of such entryways may be excluded from the definition of #floor area# for each foot of difference between the floor level of such #dwelling units# and #curb level#. However, no more than a maximum of 500 square feet may be excluded from the definition of #floor area# for each #building#.

~~**28-22**~~
~~**Windows**~~

~~All windows in the #residential# portion of a #development# or #enlargement# shall be double glazed.~~

**28-12 ~~28-23~~**
**Refuse Storage and Disposal**

In R6 through R10 Districts, #developments#, with nine or more #dwelling units# ~~or #rooming units#~~ per #vertical circulation core#, and #enlargements#, #extensions# or #conversions# that result in nine or more #dwelling units# ~~or #rooming units#~~ per #vertical circulation core#, shall comply with the provisions of this Section.

In R5D Districts, #developments# with nine or more #dwelling units# per #zoning lot#, and #enlargements#, #extensions# or #conversions# that result in nine or more #dwelling units# per #zoning lot#, shall comply with the provisions of this Section. Such provisions shall also apply to any #zoning lot# with less than nine units where such #zoning lot# and any adjacent #zoning lot# with a total of nine or more #dwelling units# are #developed# or #enlarged# under common ownership or control.

The storage of refuse shall occur entirely within an enclosed area on the #zoning lot# and appropriate locations within the #zoning lot# shall be delineated for this purpose: at least one for #residential uses#, #long-term care facilities#, and philanthropic or non-profit institutions with sleeping accommodations, as applicable, and at least one for other #community facility# and #commercial uses#. #Residential# storage and removal locations shall be provided at the rate of 2.9 cubic feet per #dwelling unit# ~~or 1.15 cubic feet per #rooming unit#~~.

A refuse disposal room of not less than twelve square feet with no dimension less than three feet shall be provided on each #story# that has entrances to #dwelling units# ~~or #rooming units#~~. Twelve square feet of floor space allocated to such refuse disposal ~~storage~~ room shall be excluded from the definition of #floor area# per #story#.

**28-13 ~~28-24~~**
**Laundry Facilities**

If the #building# provides the following, then that portion of the laundry room which is used to meet these minimum requirements shall be excluded from the definition of #floor area#:

(a) at least one washing machine per 20 #dwelling units# ~~or #rooming units#~~ and at least one dryer per 40 #dwelling units# ~~or #rooming units#~~;

(b) such machines are located in a room or rooms with an additional three square feet of unobstructed floor space equipped with chairs and tables for folding laundry for each machine provided;

(c) such rooms have at least one exterior wall with windows, or ceilings with skylights, measuring not less than 9.5 percent of the total floor space of the rooms; ~~and~~

(d) ~~such windows meet the applicable requirements of Section 24-60 (COURT REGULATIONS AND MINIMUM DISTANCE BETWEEN WINDOWS AND LOT LINES)~~ where windows are provided to meet such requirement, they face a #street#, #yard# or #court# that meets the applicable regulations set

forth in Article II, Chapter 3; and~~.~~

(e) where skylights are provided to meet such requirement, they are located in a #yard# or #court# that meets the regulations set forth in Article II, Chapter 3, and are unobstructed from their lowest level to the sky, except by permitted obstructions set forth in Section 23-87 (Permitted Obstructions in Courts).

**28-14 ~~28-25~~**
**Daylight in Corridors**

Fifty percent of the square footage of a corridor may be excluded from the definition of #floor area# if a window with a clear, non-tinted, glazed area of at least 20 square feet is provided in such corridor, provided that such window:

(a) shall be directly visible from at least 50 percent of the corridor or from the #vertical circulation core#. This standard shall be achieved when a visually unobstructed straight line can be drawn between such corridor, elevator or stairwell, and the window; and

(b) is ~~located at least 20 feet from a wall or a #side# or #rear lot line# measured in a horizontal plane and perpendicular to the rough window opening~~ facing a #street#, #yard# or #court# that meets the applicable regulations set forth in Article II, Chapter 3.

**28-20 ~~28-30~~**
**RECREATION SPACE AND PLANTING AREAS**

**28-21 ~~28-31~~**
**Required Recreation Space**

All #developments# with nine or more #dwelling units#, and #enlargements#, #extensions# or #conversions# that result in nine or more #dwelling units#, ~~with nine or more #dwelling units# or #rooming units#~~, shall provide at least the minimum amount of recreation space as set forth in the table in this Section.

The amount of recreation space required is expressed as a percentage of the total #residential floor area# or #community facility floor area# allocated to #long-term care facilities# or philanthropic or non-profit institutions with sleeping accommodations, as applicable, of the #development#, #enlargement#, #extension# or #conversion#, and may be aggregated in one type, indoors or outdoors.

The floor space of indoor recreation space provided in accordance with the standards set forth in Section ~~28-32~~ 28-22 (Standards for Recreation Space), not exceeding the amount required in the table, shall be excluded from the definition of #floor area#.

| ~~Minimum Required Recreation Space (as a percentage of the #residential floor area# )~~ | ~~District~~ |
|---|---|
| ~~3.3~~ | ~~R6 R7~~ |
| ~~2.8~~ | ~~R8 R9 R10~~ |

| District | Minimum Required Recreation Space (as a percentage of the #residential floor area# or applicable #community facility floor area#) |
|---|---|
| R6 R7 | 3.3 |
| R8 R9 R10 | 2.8 |

**28-22 ~~28-32~~**
**Standards for Recreation Space**

(a) All recreation space shall be accessible to the residents of the #building#. In a mixed use #building#, the recreation space shall be accessible only from the #residential# portion of the #building#, or the #community facility# portion of a #building# allocated to #long-term care facilities# or philanthropic or non-profit institutions with sleeping accommodations, as applicable.

(b) The minimum dimension of any recreation space shall be 15 feet. The minimum size of any outdoor recreation space shall be 225 square feet, and the minimum size of any indoor recreation space shall be 300 square feet.

(c) Outdoor recreation space shall be open to the sky except that #building# projections, not to exceed seven feet in depth, may cover up to ten percent of the outdoor recreation space, provided that the lowest level of the projection is at least ten feet above the level of the outdoor recreation space.

(d) Any indoor recreation room located in a #story# shall have at least one exterior wall with windows, or ceiling with skylights, that measure not less than 9.5 percent of the total floor space of the room ~~and such windows shall meet the applicable requirements of Section 24-60 (COURT REGULATIONS AND MINIMUM DISTANCE BETWEEN WINDOWS AND WALLS OR LOT LINES)~~. Where windows are provided to meet such requirement, they shall face a #street#, #yard# or #court# that meets the applicable regulations set forth in Article II, Chapter 3. Where skylights are provided to meet such requirement, they shall be: located in a #yard# or #court# that meets the applicable regulations set forth in Article II, Chapter 3 and shall be unobstructed from their lowest level to the sky, except for permitted obstructions set forth in Section 23-87 (Permitted Obstructions in Courts).

**28-23 ~~28-33~~**
**Planting Areas**

~~The area of the #zoning lot# between the #street line# and the #street wall# of the #building# shall be planted at ground level, or in raised planting beds that are permanently affixed to the ground, pursuant to the provisions of Section 23-892 (In R6 through R10 Districts).~~

The area of the #zoning lot# between the #street line# and all #street walls# of the #building# and their prolongations shall be planted at ground level, or in raised planting beds that are permanently affixed to the ground, except that such plantings shall not be required at the entrances to and exits from the #building#, within driveways accessing off-street parking spaces located within, to the side, or rear of such #building#, or between non-#residential uses# other than philanthropic or non-profit institutions with sleeping accommodations and #long-term care facilities# and the #street line#. No #zoning lot# shall be altered in any way that will either create a new #non-compliance# or increase the degree of #non-compliance# with the provisions of this Section.

**28-30 ~~28-40~~**
**SAFETY AND SECURITY**

**28-31 ~~28-41~~**
**Density per Corridor**

If the number of #dwelling units# or ~~#rooming units#~~ served by a #vertical circulation core# and corridor on each #story# does not exceed the number set forth in the following table, 50 percent of the square feet of the corridor serving such #dwelling units# ~~or #rooming units#~~ on such #story# may be excluded from the definition of #floor area#.

#Dwelling units# with entrance doors on more than one corridor (duplex and triplex units), may count each entrance door as a fraction of the total number of doors to such #dwelling unit# when determining the number of #dwelling units# served per corridor.

DENSITY OF
DWELLING UNITS PER CORRIDOR

| ~~Number of #Dwelling Units# and #Rooming Units# Served by a Corridor per #Story#~~ | ~~District~~ |
|---|---|
| ~~11~~ | ~~R6 R7~~ |

| | |
|---|---|
| ~~10~~ | ~~R8~~ |
| ~~8~~ | ~~R9 R10~~ |

| District | Number of #Dwelling Units# Served by a Corridor per #Story# |
|---|---|
| R6 R7 | 11 |
| R8 | 10 |
| R9 R10 | 8 |

**28-40 ~~28-50~~**
**PARKING FOR QUALITY HOUSING**

Except as modified by the provisions of this Section, #accessory# off-street parking shall be provided as set forth in the applicable underlying district regulations.

**28-41 ~~28-51~~**
**Screening**

All open #accessory# off-street #group parking facilities# shall be screened from #dwelling units#, adjacent #zoning lots# and #streets# in accordance with paragraph (a) of Section 25-66.

**28-42 ~~28-52~~**
**Special Regulations for Off-Site Accessory Parking**

Off-site #accessory# parking spaces may be unenclosed, provided that the #zoning lot# on which such spaces are located does not contain a #residential use#.

**28-43 ~~28-53~~**
**Location of Accessory Parking**

On-site #accessory# off-street parking shall not be permitted between the #street line# and the #street wall# of a #building# or its prolongation.

However, on #through lots# measuring less than 180 feet in depth from #street# to #street#, #accessory# off-street parking may be located between the #street line# and any #street wall# located beyond 50 feet of such #street line#.

*  *  *

# Article III - Commercial District Regulations

**Chapter 2**
**Use Regulations**

*  *  *

**32-30**
**USES PERMITTED BY SPECIAL PERMIT**

*  *  *

**32-32**
**By the City Planning Commission**

In the districts indicated, the following #uses# are permitted by special permit of the City Planning Commission, in accordance with standards set forth in Article VII, Chapter 4, or as otherwise indicated in this Section.

*  *  *

~~C1 C2 C3 C4 C5 C6~~
~~Domiciliary care facilities for adults~~

*  *  *

C1 C2 ~~C3 C4 C5 C6~~
#Long-term care facilities# in C1 and C2 districts mapped within R1 and R2 Districts, except as provided in Section 22-42 (Long-Term Care Facilities). ~~Nursing homes and health-related facilities in Community Districts in which the conditions set forth in Section 22-42 (Certification of Certain Community Facility Uses) apply.~~

*  *  *

**32-40**
**SUPPLEMENTARY USE REGULATIONS**

*  *  *

**32-42**
**Location within Buildings**

*  *  *

**32-423**

**Limitation on ground floor location**

C4 C5

In the districts indicated, #uses# in the Use Groups listed in the following table and marked with asterisks in the Use Group listing shall be located only as follows and as set forth in the following table:

(a) on a floor above or below the ground floor; or

(b) on the ground floor, but not within 50 feet of any #street wall# of the #building# and with no #show window# facing on the #street#.

| ~~Use Group in Which Limitation Applies~~ | ~~District~~ |
|---|---|
| ~~8, 9 or 12~~ | ~~C4~~ |
| ~~6, 9 or 11~~ | ~~C5~~ |
| District | Use Group in Which Limitation Applies |
| C4 | 8, 9 or 12 |
| C5 | 6, 9 or 11 |

**32-43**
**Ground Floor Use in Certain Locations**

**32-431**
**Ground floor use in C1-8A, C1-9A, C2-7A, C2-8A, C4-6A and C4-7A Districts**

C1-8A C1-9A C2-7A C2-8A C4-6A C4-7A

In the districts indicated, and in C1 and C2 Districts mapped within R9A and R10A Districts, #uses# within #stories# that have a floor level within five feet of #curb level# fronting on a #wide street# shall be limited to non-#residential uses# except for Type 1 lobbies, and entryways to subway stations provided in accordance with the applicable provisions of Section 37-33 (Maximum Width of Certain Uses). ~~or lobby space for #residential use#.~~

~~Such lobbies shall not occupy more than 20 linear feet of #street wall# frontage on a #wide street# or 30 linear feet on a #narrow street#.~~ Non-#residential use# shall have a depth of at least 15 feet from the #street wall#. Such minimum depth requirement may be reduced, however, where necessary, to accommodate a vertical circulation core, or structural columns associated with upper #stories# of the #building#. No more than 8,000 square feet shall be devoted to Use Group 6B within #stories# that have a floor level within five feet of #curb level#.

The provisions of Section 32-512 (For corner lots) shall not apply.

The provisions of this Section shall not apply within Community Board 7, Borough of Manhattan.

**32-432**
**Ground floor use in Community Board 7, Borough of Manhattan**

Within the boundaries of Community Board 7 in the Borough of Manhattan, when a #development#, #enlargement# or change of #use# is located in an R10 equivalent #Commercial District#, #uses# within #stories# that have a floor level within five feet of #curb level# fronting on a #wide street# shall be limited to non-#residential uses#, except for Type 1 lobbies, and entryways to subway stations provided in accordance with the applicable provisions of Section 37-33 (Maximum Width of Certain Uses). ~~except lobby space~~.

**32-433**
**Ground floor use in C1, C2 and C4 Districts in the Borough of Staten Island**

C1 C2 C4

In all C1, C2 and C4 Districts in the Borough of Staten Island, ground floor #uses# shall conform with the provisions of this Section.

(a) Ground floor level #use# requirements

All #uses# on the ground floor of a #building# shall be limited to non-#residential uses# except for Type 1 lobbies, and entrances and exits to #accessory# parking spaces provided in accordance with the applicable provisions of Section 37-33 (Maximum Width of Certain Uses). Such non-#residential uses# shall comply with the minimum depth provisions of Section 37-32 (Ground Floor Depth Requirements for Certain Uses)

In addition, enclosed parking spaces, or parking spaces covered by a #building#, including such spaces #accessory# to #residences#, shall be permitted on the ground floor, provided they comply with the provisions of Section 37-35 (Parking Wrap and Screening Requirements).

~~All #uses# on the ground floor of a #building# shall be limited to non-#residential uses# and have a depth of at least 30 feet from the #street wall# of the #building#, except that:~~

~~(1) #residential# lobbies, and an associated vertical circulation core, as well as entrances to #accessory# parking spaces, shall be permitted on the ground floor, provided such lobbies and entrances conform to the frontage requirements of paragraph (b) of this Section;~~

~~(2) enclosed parking spaces, or parking spaces covered by a #building#, including such spaces #accessory# to #residences#, shall be permitted on the ground floor, provided they are located beyond 30 feet of the #street wall# of the #building#; and~~

~~(3) where a #commercial district# is mapped along an entire #block# front, and a #zoning lot# includes #street# frontage along such #block# front, and also includes #street# frontage along a #block# front that is not mapped as a #commercial district# in its entirety, non-#residential uses# shall be required only within 30 feet of the #street wall# facing the #block# front mapped in its entirety as a #commercial district#.~~

The level of the finished floor of such ground floor shall be located not higher than two feet above nor lower than two feet below the as-built level of the adjoining #street#.

~~(b) Ground floor frontage requirements~~

~~Non-#residential uses# shall extend along the entire width of the ground floor of the #building#, except as follows:~~

~~(1) in C1 and C2 Districts mapped within R1, R2 and R3 Districts, and in C4 Districts, #residential# lobbies and entrances to #accessory# parking spaces shall be permitted, provided such lobbies and entrances do not occupy more than 25 percent of the #street wall# width of the #building#; and~~

~~(2) in C1 and C2 Districts mapped within R4, R5 and R6 Districts, #residential# lobbies and entrances to #accessory# parking spaces shall be permitted, provided that:~~

~~(i) for #zoning lots# with a #street# frontage of less than 60 feet, such lobbies and entrances do not occupy more than 50 percent of the #street wall# width along such frontage, or 20 feet, whichever is less. In addition, an entrance to #accessory# parking spaces shall not exceed a width of 15 feet; and~~

~~(ii) for #zoning lots# with a #street# frontage equal to or greater than 60 feet, such lobbies and entrances do not occupy more than 25 percent of the #aggregate width of street wall# of the #building#.~~

(b)~~(c)~~ #Non-conforming buildings#

#Buildings# containing #non-conforming residential uses# on the ground floor shall be permitted to

#enlarge# without regard to the #use# regulations of this Section, provided that such #enlargement# complies with the provisions of the #residential yard# regulations set forth in Section 23-40.

**32-434**
**Ground floor use in C4-5D and C6-3D Districts and in certain C2 Districts**

C4-5D C6-3D

In the districts indicated and in C2 Districts mapped within R7D or R9D Districts, #uses# within #stories# that have a floor level within five feet of #curb level# shall be limited to non-#residential uses# which shall extend along the entire width of the #building#, except for Type 1 lobbies, entrances and exits to #accessory# off-street parking facilities, and entrances to subway stations provided in accordance with the provisions of Section 37-33 (Maximum Width of Certain Uses). ~~and lobbies, entrances to subway stations and #accessory# parking spaces, provided such lobbies and entrances do not occupy, in total, more than 25 percent of the #street wall# width of the #building# or more than 20 linear feet of #street wall# frontage on a #wide street# or 30 linear feet on a #narrow street#, whichever is less.~~ Such non-#residential uses# shall comply with the ~~have a~~ minimum depth provisions of Section 37-32 (Ground Floor Depth Requirements for Certain Uses) ~~of 30 feet from the #street wall# of the #building#. In C6-3D Districts, a vertical circulation core shall be permitted within such minimum 30 foot depth~~.

Enclosed parking spaces, or parking spaces within a #building#, including such spaces #accessory# to #residences#, shall be permitted to occupy #stories# that have a floor level within five feet of #curb level# provided they comply with the provisions of Section 37-35 (Parking Wrap and Screening Requirements) ~~are located beyond 30 feet of the #street wall# of the #building#. However, loading~~ Loading berths serving any permitted #use# in the #building# may occupy up to 40 feet of such #street# frontage and, if such #building# fronts on both a #wide street# and a #narrow street#, such loading berth shall be located only on a #narrow street#.

~~In C6-3D Districts, each ground floor level #street wall# of a #commercial# or #community facility use# shall be glazed with materials which may include #show windows#, glazed transoms or glazed portions of doors. Such glazing shall occupy at least 70 percent of the area of each such ground floor level #street wall#, measured to a height of 10 feet above the level of the adjoining sidewalk, public access area or #base plane#, whichever is higher. Not less than 50 percent of the area of each such ground floor level #street wall# shall be glazed with transparent materials and up to 20 percent of such area may be glazed with translucent materials. However, where the #street wall# or portion thereof fronts an elevated rail line or is located within 50 feet of a #street wall# that fronts an elevated rail line, the glazing requirement of the area of the ground floor level #street wall# may be reduced from 70 percent to 50 percent, and not less than 35 percent of the area of each such ground floor level #street wall# shall be glazed with transparent materials and up to 15 percent of such area may be glazed with translucent materials. Furthermore, all security gates installed after September 30, 2009, that are swung, drawn or lowered to secure #commercial# or #community facility# premises shall, when closed, permit visibility of at least 75 percent of the area covered by such gate when viewed from the #street#, except that this provision shall not apply to entrances or exits to parking garages.~~

In C4-5D and C6-3D Districts, and in C2 Districts mapped within R7D or R9D Districts, each ground floor level

#street wall# in a #building developed# or #enlarged# on the ~~#buildings# developed after October 11, 2012, or portions of #buildings enlarged# on the~~ ground floor level ~~after October 11, 2012,~~ shall comply with the glazing provisions set forth in Section 37-34 (Minimum Transparency Requirements). ~~Section 132-30 (SPECIAL TRANSPARENCY REGULATIONS)~~, inclusive. ~~Such provisions shall apply in such districts to #building# frontages on Fulton Street in the Borough of Brooklyn and to frontages on Webster Avenue in the Borough of the Bronx. However, these provisions shall not apply to #buildings# on #zoning lots# with a width of less than 20 feet, provided such #zoning lot# existed on October 11, 2012.~~

**32-435**
**Ground floor use in High Density Commercial Districts**

The regulations of this Section shall apply to any #development# occupied by #predominantly residential use#, constructed after April 21, 1977, located on any #zoning lot# within C1-8, C1-9, C2-7, C2-8, C4-6, C4-7, C5-1, C5-2, C5-4, C6-3, C6-4, C6-5 or C6-8 Districts, or C1 and C2 Districts mapped within R9 or R10 Districts. However, this Section shall not apply within any Special Purpose District nor shall it apply to any #Quality Housing building#, except as otherwise set forth herein.

An application to the Department of Buildings for a permit respecting any #development# shall include a plan and an elevation drawn to a scale of at least one-sixteenth inch to a foot of the new #building# and #buildings# on #contiguous lots# or #contiguous blocks# showing #signs#, other than #advertising signs#, #arcades#, #street wall# articulation, curb cuts, #street# trees, sidewalk paving, central refuse storage area and such other necessary information as may be required by the Commissioner of Buildings.

(a) Definitions

For the purposes of this Section, the following definitions shall be applicable.

Contiguous block

For the purposes of this Section, inclusive, a "contiguous block" is a #block# containing one or more #zoning lots# separated by a #narrow street# from the #block# containing the #development#.

Contiguous lot

For the purposes of this Section, inclusive, a "contiguous lot" is a #zoning lot# which shares a common #side lot line# with the #zoning lot# of the #development#.

Development

For the purposes of this Section, inclusive, in addition to the definition of “development” pursuant to Section 12-10 (DEFINITIONS), “development” shall also include an #enlargement# involving an increase in #lot coverage#.

Predominantly residential use

For the purposes of this Section, inclusive, a "predominantly residential use" means a #building# having a #residential floor area# in excess of 50 percent of the total #building floor area#.

(b) Applicability of Article II, Chapter 6

In C1-8, C1-9, C2-7, C2-8, C4-6, C4-7, C5-1, C5-2, C5-4, C6-3, C6-4, C6-5 and C6-8 Districts, or C1 or C2 Districts mapped within R9 or R10 Districts, the regulations of Article II, Chapter 6 (Special Urban Design Guidelines - Streetscape), shall apply to any #development# occupied by #predominantly residential use#, except as modified by the provisions of this Section. The purpose of these modifications is to make the regulations of Article II, Chapter 6, applicable to #Commercial Districts#.

(c) Retail Continuity

For #buildings# with front #building# walls that are at least 50 feet in width and front upon a #wide street#, a minimum of 50 percent of the width of such front #building# wall shall be occupied at the ground floor level by #commercial uses#, as permitted by district regulations.

In C1-8, C1-9, C2-7, C2-8, C4-6 Districts, and C1 or C2 Districts mapped within R9 or R10 Districts, #uses# which occupy such 50 percent of the front #building# wall shall be limited to those listed in Use Groups 6A, 6C and 6F, excluding banks and loan offices, except that in C4-6 Districts only, such #uses# may additionally include those listed in Use Groups 8A, 8B and 10A. All #uses# permitted by the underlying district regulations are permitted in the remaining 50 percent of the front #building# wall.

Such requirement of #commercial uses# for a minimum of 50 percent of the front #building# wall may be waived, or additional #uses# permitted, upon certification by the City Planning Commission to the Commissioner of Buildings that an adequate supply of such #uses# already exists at the ground floor level in the surrounding area.

The Commission may require that an application for such certification of additional #uses# for a completed #building#, where #floor area# has been designated for occupancy for such #commercial uses#, establish that a good faith effort has been made to secure tenancy by such #uses#.

(d) Ground floor transparency and articulation

When any #building# wall which is five feet or more in height adjoins a sidewalk, a #public plaza# or an #arcade#, ground floor level transparency shall be provided in accordance with the provisions of Section 37-34 (Minimum Transparency Requirements).

In addition, any portion of such #building# wall, 50 feet or more in width, which contains no transparent element between #curb level# and 12 feet above #curb level# or the ceiling of the ground floor, whichever is higher, or to its full height if such wall is less than 12 feet in height, shall be covered with ivy or similar planting or contain artwork or be treated so as to provide visual relief. Plants shall be planted in soil

having a depth of not less than 2 feet, 6 inches, and a minimum width of 24 inches. If artwork is being used, approval by the New York City Design Commission shall be obtained prior to the certificate of occupancy being issued for the #development#.

(e) Sign regulations

In addition to the applicable district regulations in C1-8, C1-9, C2-7, C2-8 and C4-6 Districts, and C1 or C2 Districts mapped within R9 or R10 Districts, all #signs#, other than #advertising signs# and window #signs#, shall be located in a horizontal band not higher than three feet, the base of which is located not higher than 17 feet above #curb level#. Where there is a grade change of at least 1.5 feet in 100 along the portion of the #street# upon which the #development# fronts, such signage band may be staggered along such #street#.

When a #building# on a #contiguous lot# or #contiguous block# contains #accessory# business #signs# within a coordinated horizontal band along its #street# frontage, the signage strip along the #development# shall be located at the same elevation as the adjacent band, but in no event higher than 17 feet above #curb level#. Where coordinated horizontal bands exist on two #contiguous lots# or #contiguous blocks# on both sides of the #development#, the signage strip shall be located at the same elevation as one adjacent band, or between the elevations of the two. For the purpose of this Section, the elevation is measured from the #curb level# to the base of the signage strip.

The City Planning Commission may, by certification to the Commissioner of Buildings, allow modifications of the requirements of this Section. Such modifications will be permitted when the Commission finds that such modifications will enhance the design quality of the #street wall#.

* * *

**32-44**
**Air Space over a Railroad or Transit Right-of-way or Yard**

* * *

**32-442**
**Use of railroad or transit air space**
C1 C2 C3 C4 C5 C6 C7 C8

* * *

(c) Notwithstanding the above, the #High Line#, as defined in Section 98-01, shall be governed by the provisions of Section ~~98-17~~ 98-16 (Air Space Over a Railroad or Transit Right of Way or Yard).

* * *

~~**32-45**~~
~~**Certification of Certain Community Facility Uses**~~

~~C1 C2 C3 C4 C5 C6~~

~~In all districts, as indicated, for any nursing homes and health-related facilities or #enlargement#, #extension# or change in #use# thereof, the City Planning Commission shall certify to the Department of Buildings, prior to the filing of any plans by the applicant for a building permit for such #use#, that none of the following conditions applies to the Community District within which such #use#, or #enlargement#, #extension# or change in such #use#, is to be located:~~

~~(1) the ratio between the number of beds for such #uses# in existence, under construction or approved toward construction by the appropriate Federal or State governmental agency, to the population of the Community District compared to such ratio for other Community Districts shows a relative concentration of facilities covered in this Section in the affected district;~~

~~(2) a scarcity of land for general community purposes exists; or~~

~~(3) the incidence of construction of facilities for the last three years warrants review over these facilities because they threaten to disrupt the land use balance in the community.~~

~~If the Commission finds that one or more of the conditions set forth in this Section applies to the Community District within which such #use#, or #enlargement#, #extension# or change in such #use#, is to be located, a special permit pursuant to Section 74-90 shall be required.~~

* * *

# Article III - Commercial District Regulations

**Chapter 3**
**Bulk Regulations for Commercial or Community Facility Buildings in Commercial Districts**

**33-00**
**APPLICABILITY, DEFINITIONS AND GENERAL PROVISIONS**

**33-01**
**Applicability of this Chapter**

The #bulk# regulations of this Chapter apply to #commercial buildings#, #community facility buildings# or #buildings# used partly for #commercial use# and partly for #community facility use#, on any #zoning lot# or portion of a #zoning lot# located in any #Commercial District#, including all #developments# or #enlargements#. As used in this Chapter, the term "any #building#" shall therefore not include a #residential building# or a #mixed building#, the #bulk# regulations for which are set forth in Article III, Chapter 4, and Article III, Chapter 5, respectively. In addition, the #bulk# regulations of this Chapter, or of specified sections thereof, also apply in other provisions of this Resolution where they are incorporated by cross reference.

Existing #buildings or other structures# that do not comply with one or more of the applicable #bulk# regulations are #non-complying buildings or other structures# and are subject to the regulations set forth in Article V, Chapter 4.

Special regulations applying to #large-scale residential developments#, #community facility uses# in #large-scale residential developments# or #large-scale community facility developments# are set forth in Article VII, Chapter 8.

Special regulations applying only in Special Purpose Districts are set forth in Articles VIII, IX, X, XI, XII and XIII.

All C6-1A Districts shall comply with the regulations of C6-1 Districts except as set forth in Sections 33-12, paragraph (c), 33-13, paragraph (b) and 33-15, paragraph (a).

In Manhattan Community Districts 1, 2, 3, 4, 5 and 6, Brooklyn Community Districts 1, 2, 6 and 8, and Queens Community Districts 1 and 2, the #conversion# of non-#residential floor area#, to #residences# in #buildings# erected prior to December 15, 1961, or January 1, 1977, as applicable, shall be subject to the provisions of Article I, Chapter 5 (Residential Conversion within Existing Buildings), unless such #conversions# meet the requirements for #residential development# of Article II (Residence District Regulations).

Special regulations applying in the #waterfront area# are set forth in Article VI, Chapter 2.

Special regulations applying in the #flood zone# are set forth in Article VI, Chapter 4.

**33-011**
**Quality Housing Program**

The applicability of the Quality Housing Program to #commercial buildings#, #community facility buildings# or #buildings# used partly for #commercial use# and partly for #community facility use# is set forth in this Section.

In C1 and C2 Districts mapped within R6 through R10 Districts with a letter suffix, and in C1-6A, C1-7A, C1-8A, C1-8X, C1-9A, C2-6A, C2-7A, C2-7X, C2-8A, C4-2A, C4-3A, C4-4A, C4-4D, C4-4L, C4-5A, C4-5D, C4-5X, C4-6A, C4-7A, C5-1A, C5-2A, C6-2A, C6-3A, C6-3D, C6-3X, C6-4A or C6-4X Districts, all #buildings# shall comply with the applicable height and setback regulations for #Quality Housing buildings# set forth in Article III, Chapter 5. Special regulations are set forth for #buildings# containing #long-term care facilities# or philanthropic or non-profit institutions with sleeping accommodations in Section 33-012 (Special Provisions for Certain Community Facility Uses).

**33-012**
**Special Provisions for Certain Community Facility Uses**

The provisions of this Section shall apply to #buildings# containing #long-term care facilities# or philanthropic or non-profit institutions with sleeping accommodations, as listed in Use Group 3.

(a) #Buildings# containing #long-term care facilities#

(1) #Commercial Districts# with a residential equivalent of an R1 or R2 District

In C1 and C2 Districts mapped within R1 and R2 Districts, where a #long-term care facility# is authorized by the City Planning Commission pursuant to the provisions of Section 22-42, or permitted pursuant to Section 74-901, the #bulk# regulations of this Chapter shall apply. The maximum #floor area ratio# for such #long-term care facilities# shall not exceed the applicable #floor area ratio# of paragraph (b) of Section 33-121 (In districts with bulk governed by Residence District bulk regulations), except as permitted by the City Planning Commission pursuant to Section 74-902.

(2) #Commercial Districts# with a residential equivalent of an R3 through R5 District

In C1 or C2 Districts mapped within R3 through R5 Districts, except R3A, R3X, R3-1, R4A, R4B, R4-1, R5A, and R5D Districts, or in C3 or C4-1 Districts, the #bulk# regulations of Article II, Chapter 3 pertaining to #affordable independent residences for seniors#, inclusive, shall apply to #buildings#, or portions thereof, containing #long-term care facilities#. However, the City Planning Commission may permit the #bulk# regulations of this Chapter to apply pursuant to the special permit in Section 74-903 (Certain community facility uses in R3 to R9 Districts and certain Commercial Districts).

The #Residence District# within which such #Commercial Districts# are mapped, or the applicable residential equivalent set forth in the tables in Section 35-23 (Residential Bulk Regulations in Other C1 or C2 Districts or in C3, C4, C5 or C6 Districts) shall be used to determine the applicable residential #bulk# regulations of Article II, Chapter 3.

In C1 or C2 Districts mapped within R3A, R3X, R3-1, R4A, R4B, R4-1, R5A and R5D Districts, the #bulk# regulations of this Chapter shall apply to #community facility buildings#, or the #community facility# portion of a #building# containing #long term care facilities#, as applicable. The maximum #floor area ratio# for such #long-term care facilities# shall not exceed the applicable #floor area ratio# of paragraph (d) or (e) of Section 33-121 (In districts with bulk governed by Residence District bulk regulations), as applicable, except as permitted by the City Planning Commission pursuant to Section 74-903.

(3) #Commercial Districts# with a residential equivalent of an R6 through R10 District

In C1 or C2 Districts mapped within R6 through R10 Districts, or in #Commercial Districts# with a residential equivalent of an R6 through R10 District, the applicable #bulk# regulations for #Quality Housing buildings# in Article II, Chapter 3, pertaining to #affordable independent residences for seniors#, inclusive, shall apply to #buildings#, or portions thereof, containing #long-term care facilities#. However, the provisions of Section 23-66 (Height and Setback Requirements for Quality Housing Buildings) are modified by Section 35-65.

The #Residence District# within which such #Commercial Districts# are mapped, or the applicable residential equivalent set forth in the tables in Section 35-23 (Residential Bulk Regulations in Other C1 or C2 Districts or in C3, C4, C5 or C6 Districts) shall be used to determine the applicable residential #bulk# regulations of Article II, Chapter 3.

In C1 or C2 Districts mapped within R6 through R10 Districts without a letter suffix, or in #Commercial Districts# with a residential equivalent of an R6 through R10 District without a letter suffix, the City Planning Commission may permit the #bulk# regulations of this Chapter to apply to such #long-term care facilities# pursuant to the special permit in Section 74-903.

(b) #Buildings# containing philanthropic or non-profit institutions with sleeping accommodations

(1) #Commercial Districts# with a residential equivalent of an R1 or R2 District

In C1 and C2 Districts mapped within R1 and R2 Districts, the maximum #floor area ratio# for a #building# that contains a philanthropic or non-profit institution with sleeping accommodations shall not exceed the #floor area ratio# set forth in paragraph (b) of Section 33-121, except as permitted by the City Planning Commission pursuant to Section 74-902.

(2) #Commercial Districts# with a residential equivalent of an R3 through R10 District

In C1 or C2 Districts mapped within R3 through R9 Districts, the maximum #floor area ratio# for a #building# that contains a philanthropic or non-profit institution with sleeping accommodations shall not exceed the #floor area ratio# set forth in paragraphs (d) or (e) of Section 33-121, except as permitted by the City Planning Commission pursuant to Section 74-903.

In other #Commercial Districts# with a residential equivalent of an R3 through R9 Districts the maximum #floor area ratio# for a #building# that contains a philanthropic or non-profit institution with sleeping accommodations shall not exceed the #floor area ratio# set forth in paragraphs (a) and (b) of Section 33-123, as applicable, except as permitted by the City Planning Commission pursuant to Section 74-903.

In C1 or C2 Districts mapped within R10 Districts or in #Commercial Districts# with a residential equivalent of an R10 District, the maximum #floor area ratio# for a #building# that contains a philanthropic or non-profit institution with sleeping accommodations shall not exceed the #floor area ratio# set forth in the Tables of Sections 33-121 or 33-123, as applicable.

In R6 through R10 Districts without a letter suffix, the height and setback regulations for #Quality Housing buildings# set forth in Article II, Chapter 3, may be applied. However, the provisions of Section 23-66 (Height and Setback Requirements for Quality Housing Buildings) are modified by Section 35-65.

(c) Applicability of Quality Housing Program elements

For all #buildings# containing #long-term care facilities# that utilize the #bulk# regulations for #affordable independent residences for seniors# in Article II, Chapter 3, as modified by Section 35-65, and for #buildings# containing philanthropic or non-profit institutions with sleeping accommodations that utilize the height and setback regulations for #Quality Housing buildings# in Section 35-65, the Quality Housing Program, and the associated mandatory and optional program elements, shall apply to such #uses#, as modified by paragraph (d) of Section 28-01 (Applicability of this Chapter).

* * *

**33-10**
**FLOOR AREA REGULATIONS**

*** * ***

**33-12**
**Maximum Floor Area Ratio**

**C1 C2 C3 C4C5 C6 C7 C8**

In all districts, as indicated, for any #zoning lot#, the maximum #floor area ratio# shall not exceed the #floor area

ratio# set forth in this Section, except as otherwise provided in the following Sections:

* * *

Any given lot area shall be counted only once in determining #floor area ratio#.

Where #floor area# in a #building# is shared by multiple #uses#, the #floor area# for such shared portion shall be attributed to each #use# proportionately, based on the percentage each #use# occupies of the total #floor area# of the #zoning lot# less any shared #floor area#.

Except where authorized by express provisions of this Resolution, the maximum #floor area ratio# shall not exceed the amount set forth in this Section by more than 20 percent.

In addition, the following limitations on maximum permitted #floor area# shall apply:

* * *

**33-121**
**In districts with bulk governed by Residence District bulk regulations**

C1-1 C1-2 C1-3 C1-4 C1-5 C2-1 C2-2 C2-3 C2-4 C2-5

In the districts indicated, for a #zoning lot# containing a #commercial# or #community facility use#, the maximum #floor area ratio# is determined by the #Residence District# within which such #Commercial District# is mapped and shall not exceed the maximum #floor area ratio# set forth in the following table:

* * *

In addition, the following provisions shall apply:

(a) For #zoning lots# containing both #commercial uses# and #community facility uses#, the total #floor area# used for #commercial uses# shall not exceed the amount permitted for #zoning lots# containing only #commercial uses# set forth in Column A.

* * *

(b) In C1 and C2 Districts mapped within R1 and R2 Districts, the maximum #floor area ratio# for #community facility uses# on a #zoning lot# containing both #commercial uses# and #community facility uses# is 0.50 unless it is increased pursuant to the special permit provisions of Section 74-902 ~~74-901~~ (Certain community facility uses in R1 and R2 Districts and certain Commercial Districts.)

* * *

(d) In C1 and C2 Districts mapped within R3, R4, R5, R6, R7, R8 and R9 Districts, for any #zoning lot# containing ~~nursing homes, health-related facilities, domiciliary care facilities for adults, sanitariums and~~ philanthropic or non-profit institutions with sleeping accommodations, or in C1 and C2 Districts mapped within R3A, R3X, R3-1, R4A, R4B, R4-1, R5A and R5D districts, for any #zoning lot# containing #long-term care facilities#, the total #floor area# for all such #community facility uses# shall not exceed the amount as set forth in paragraph (b) of Section 24-111 unless modified pursuant to Section ~~74-902~~ 74-903.

(e) The maximum #floor area ratio# for any #zoning lot# used partly for #commercial uses# and partly for #long-term care facilities# in C1 and C2 Districts mapped within R3A, R3X, R3-1, R4A, R4B, R4-1, R5A and R5D districts, ~~nursing homes, health-related facilities, domiciliary care facilities for adults, sanitariums~~ or ~~and~~ philanthropic or non-profit institutions with sleeping accommodations in C1 or C2 Districts mapped within R3 through R9 Districts, , shall not exceed the amount permitted for a #zoning lot# containing #commercial uses# as set forth for the applicable #Residence District# within which such #Commercial District# is mapped in Column A. However, for the districts in which the allowable #floor area ratio#, as set forth in paragraph (b) of Section 24-111, or, for #Quality Housing buildings#, as set forth in Section 23-153, exceeds the amount permitted for a #zoning lot# containing #commercial uses#, as set forth in Column A, the provisions of paragraph (b) of Section 24-111 or Section 23-153, as applicable, shall be used to compute the maximum #floor area# permissible for the #zoning lot# unless modified pursuant to Section ~~74-902~~ 74-903.

* * *

**33-123**
**Community facility buildings or buildings used for both community facility and commercial uses in all other Commercial Districts**

C1-6 C1-7 C1-8 C1-9 C2-6 C2-7 C2-8 C3 C4 C5 C6 C8

In the districts indicated, the maximum #floor area ratio# for a #zoning lot# containing #community facility uses#, or for a #zoning lot# containing both #commercial# and #community facility uses#, shall not exceed the #floor area ratio# set forth in the following table:

* * *

For #zoning lots# containing both #commercial uses# and #community facility uses#, the total #floor area# used for #commercial uses# shall not exceed the amount permitted for #zoning lots# containing only #commercial uses# in Section 33-122.

In addition, the following provisions shall apply:

(a) In all #Commercial Districts# except ~~C7 and~~ C8 Districts, or districts with a residential equivalent of an R10 District, for any #zoning lot# containing ~~nursing homes, health-related facilities, domiciliary care facilities for adults, sanitariums and~~ philanthropic or non-profit institutions with sleeping accommodations, the total #floor area# used for such ~~the~~ #community facility use# shall not exceed the amount as set forth in paragraph (b) of Section 24-111 (Maximum floor area ratio for certain community facility uses), or, for #Quality Housing buildings#, as set forth in Section 23-153, applying the equivalent #Residential District# (indicated in Section 34-112) for the #Commercial District# in which such #use# is located, unless modified pursuant to Section 74-903 ~~74-902~~.

(b) The maximum #floor area ratio# for any #zoning lot# used partly for #commercial use# and partly for ~~nursing homes, health-related facilities, domiciliary care facilities for adults, sanitariums and~~ philanthropic or non-profit institutions with sleeping accommodations in #Commercial Districts# other than C8 Districts, or districts with a residential equivalent of an R10 District, shall not exceed the amount permitted for a #zoning lot# containing #commercial uses# by the applicable district regulations. However, for the districts in which the allowable #floor area ratio#, as set forth in paragraph (b) of Section 24-111, or, for #Quality Housing buildings#, as set forth in Section 23-153, exceeds the amount permitted for a #zoning lot# containing #commercial uses#, the provisions of paragraph (b) of Section 24-111 or Section 23-153, as applicable, shall be used to compute the maximum #floor area# permissible for the #zoning lot# unless modified pursuant to Section 74-903 ~~74-902~~.

* * *

**33-20**
**YARD REGULATIONS**

* * *

**33-23**
**Permitted Obstructions in Required Yards or Rear Yard Equivalents**

In all #Commercial Districts#, the following obstructions shall be permitted when located within a required #yard# or #rear yard equivalent#:

(a) In any #yard# or #rear yard equivalent#:

* * *

(b) In any #rear yard# or #rear yard equivalent#:

(1) Balconies, unenclosed, subject to the provisions of Section 24-166~~165~~;

* * *

**33-40**

**HEIGHT AND SETBACK REGULATIONS**

~~**Definitions and General Provisions**~~

All #buildings# in #commercial districts# shall comply with the height and setback regulations set forth in this Section, inclusive. However, the height and setback regulations of this Section, inclusive, shall not apply in C1 and C2 Districts mapped within R6 through R10 Districts with a letter suffix, and in C1-6A, C1-7A, C1-8A, C1-8X, C1-9A, C2-6A, C2-7A, C2-7X, C2-8A, C4-2A, C4-3A, C4-4A, C4-4D, C4-4L, C4-5A, C4-5D, C4-5X, C4-6A, C4-7A, C5-1A, C5-2A, C6-2A, C6-3A, C6-3D, C6-3X, C6-4A or C6-4X Districts. In lieu thereof, all #buildings# in such districts shall comply with the applicable height and setback regulations for #Quality Housing buildings# set forth in Article III, Chapter 5.

* * *

**33-43**
**Maximum Height of Walls and Required Setbacks**

* * *

**33-431**
**In C1 or C2 Districts with bulk governed by surrounding Residence District**

C1-1 C1-2 C1-3 C1-4 C1-5 C2-1 C2-2 C2-3 C2-4 C2-5

~~(a)~~ In the districts indicated, for #buildings other than #Quality Housing buildings#, the maximum height of a front wall and the required front setback of a #building or other structure# shall be determined by the #Residence District# within which such #Commercial District# is mapped and, except as otherwise set forth in this Section, shall be as set forth in the following table:

* * *

~~C1-1 C1-2 C1-3 C1-4 C1-5 C2-1 C2-2 C2-3 C2-4 C2-5~~

~~(b) In the districts indicated, when mapped within R6A, R6B, R7A, R7B, R7D, R7X, R8A, R8B, R8X, R9A, R9D, R10A or R10X Districts, the height and setback regulations of Sections 33-43 through 33-457, inclusive, shall not apply. In lieu thereof, the provisions of Section 35-24 (Special Street Wall Location and Height and Setback Regulations in Certain Districts) shall apply.~~

**33-432**
**In other Commercial Districts**
C1-6 C1-7 C1-8 C1-9 C2-6 C2-7 C2-8 C3 C4 C5 C6 C7 C8

~~(a)~~ In the districts indicated, for #buildings other than #Quality Housing buildings#, the maximum height of a front wall and the required front setback of a #building or other structure#, except as otherwise set forth in this Section, shall be as set forth in the following table:

* * *

~~C1-6A C1-7A C1-8A C1-8X C1-9A C2-6A C2-7A C2-7X C2-8A C4-2A C4-3A C4-4A C4-4D C4-4L C4-5A C4-5D C4-5X C4-6A C4-7A C5-1A C5-2A C6-2A C6-3A C6-3D C6-3X C6-4A C6-4X~~

~~(b) In the districts indicated, the height and setback regulations of Sections 33-43 through 33-457, inclusive, shall not apply. In lieu thereof, the provisions of Section 35-24 (Special Street Wall Location and Height and Setback Regulations in Certain Districts) shall apply.~~

**33-433**
**Special height and setback regulations**

(a) Within the boundaries of Community District 7 in the Borough of Manhattan, all #buildings or other structures# located in an R10 equivalent #Commercial Districts# without a letter suffix shall comply with the requirements of Section 23-672 ~~634~~ (Special height and setback regulations in R10 Districts within Community District 7, Borough of Manhattan).

(b) Within the boundaries of Community District 9 in the Borough of Manhattan, all #buildings# located in R8 Districts north of West 125th Street shall be #developed# or #enlarged# pursuant to Section 23-674 (Special height and setback regulations for certain sites in Community District 9, Borough of Manhattan)~~the #residential bulk# regulations of the Quality Housing Program~~.

(c) In C1 or C2 Districts mapped within R5D Districts, all #buildings or other structures# shall comply with the applicable height and setback requirements of Section 23-60.

* * *

**33-44**
**Alternate Front Setbacks**
C1 C2 C3 C4 C5 C6 C7 C8

In all districts as indicated, for #buildings other than #Quality Housing buildings#, if an open area is provided along the full length of the #front lot line# with the minimum depth set forth in this Section, the provisions of Section 33-43 (Maximum Height of Walls and Required Setbacks) shall not apply. The minimum depth of such open area shall be measured perpendicular to the #front lot line#. However, in such instances, except as otherwise provided in Sections 33-42 (Permitted Obstructions), 33-45 (Tower Regulations) or 85-04 (Modifications of Bulk Regulations), no #building or other structure# shall penetrate the alternate #sky exposure plane# set forth in this Section, and the #sky exposure plane# shall be measured from a point above the #street line#.

*  *  *

**33-45**
**Tower Regulations**

*  *  *

**33-451**
**In certain specified Commercial Districts**

C4-7 C5-2 C5-3 C5-4 C5-5 C6-4 C6-5 C6-6 C6-7 C6-8 C6-9

*  *  *

Unenclosed balconies, subject to the provisions of Section 24-166~~165~~ (Balconies~~ in R3 through R10 Districts~~), are permitted to project into or over open areas not occupied by towers.

*  *  *

**33-49**
**Special Height and Setback Limitations**

*  *  *

~~**33-493**~~
~~**Special provisions along certain district boundaries**~~

~~C1-6A C1-7A C1-8A C1-9A C2-6A C2-7A C2-7X C2-8A C4-2A C4-3A C4-4A C4-4D C4-4L C4-5A C4-5D C4-5X C4-6A C4-7A C5-1A C5-2A C6-2A C6-3A C6-3D C6-3X C6-4A C6-4X~~

~~In the districts indicated, and in C1 and C2 Districts mapped within R6A, R7A, R7B, R7D, R7X, R8A, R8B, R8X, R9A, R9D, R9X, R10A or R10X Districts, the #development# or #enlargement# of a #building#, or portions thereof, within 25 feet of an R1, R2, R3, R4, R5 or R6B District shall comply with the requirements for R6B Districts in Section 23-633 (Street wall location and height and setback regulations in certain districts).~~

*  *  *

# Article III - Commercial District Regulations

**Chapter 4**
**Bulk Regulations for Residential Buildings in Commercial Districts**

**34-00**
**APPLICABILITY AND DEFINITIONS**

**34-01**
**Applicability of this Chapter**

The #bulk# regulations of this Chapter apply to any #zoning lot# containing only #residential buildings# in any #Commercial District# in which such #buildings# are permitted. Where a #residential building# and one or more #buildings# containing non-#residential uses# are on a single #zoning lot#, the #bulk# regulations of Article III, Chapter 5, shall apply. In addition, the #bulk# regulations of this Chapter or of specified Sections thereof also apply in other provisions of this Resolution where they are incorporated by cross reference.

However, in C3A Districts, the #bulk# regulations of this Chapter shall not apply to any #residential building#. In lieu thereof, the #bulk# regulations for R3A Districts in Article II, Chapter 3 (Bulk Regulations for Residential Buildings in Residence Districts), shall apply to #residential buildings#.

In C4-4L Districts, the #bulk# regulations of this Chapter shall not apply to any #residential building#. In lieu thereof, the #bulk# regulations for C4-4L Districts in Article III, Chapter 5 (Bulk Regulations for Mixed Buildings in Commercial Districts), shall apply to #residential buildings#.

Existing #buildings or other structures# that do not comply with one or more of the applicable #bulk# regulations are #non-complying buildings or other structures# and are subject to the regulations set forth in Article V, Chapter 4.

Special regulations applying only in Special Purpose Districts are set forth in Articles VIII, IX, X, XI, XII and XIII.

All C6-1A Districts shall comply with the regulations of C6-1 Districts except as set forth in Section 34-112.

In Manhattan Community Districts 1, 2, 3, 4, 5 and 6, Brooklyn Community Districts 1, 2, 6 and 8, and Queens Community Districts 1 and 2, the #conversion# of non-#residential floor area# to #residences# in #buildings# erected prior to December 15, 1961, or January 1, 1977, as applicable, shall be subject to the provisions of Article 1, Chapter 5 (Residential Conversions within Existing Buildings), unless such #conversions# meet the requirements for new #residential development# of Article II (Residence District Regulations).

Special regulations applying in the #waterfront area# are set forth in Article VI, Chapter 2.

Special regulations applying in the #flood zone# are set forth in Article VI, Chapter 4.

**34-011**
**Quality Housing Program**

(a) In C1 and C2 Districts mapped within R6 through R10 Districts ~~#Residence Districts#~~ with a letter suffix, and in C1-6A, C1-7A, C1-8A, C1-8X, C1-9A, C2-6A, C2-7A, C2-7X, C2-8A, C4-2A, C4-3A, C4-4A, C4-4D, C4-4L, C4-5A, C4-5D, C4-5X, C4-6A, C4-7A, C5-1A, C5-2A, C6-2A, C6-3A, C6-3D, C6-3X, C6-4A or C6-4X Districts, #residential buildings# shall comply with applicable #bulk# regulations for #Quality Housing buildings# set forth in Article II, Chapter 3, except as modified by Section 34-20 (EXCEPTIONS TO APPLICABILITY OF RESIDENCE DISTRICT CONTROLS). In addition, #Quality Housing buildings# shall comply with all of the requirements of Article II, Chapter 8 (Quality Housing Program).

(b) In C1 and C2 Districts mapped within R6 through R10 Districts without a letter suffix or other #Commercial Districts# with a residential equivalent of an R6 through R10 District without a letter suffix ~~the districts listed in paragraph (a) without a letter suffix, and in C5-2, C5-3, C5-4, C5-5, C6-1, C6-1A, C6-4, C6-5, C6-6, C6-7, C6-8 or C6-9 Districts~~, the #bulk# regulations applicable to #Quality Housing buildings# set forth in paragraph (a) of this Section may, as an alternative, be applied to a #building# under the same conditions set forth in Sections 23-011 and 34-112. ~~In addition, all #Quality Housing buildings# shall comply with Section 34-233 (Special provisions applying along district boundaries).~~

(c) In #Commercial Districts#, for #Quality Housing buildings#, the applicable #bulk# regulations of this Chapter may be modified for #zoning lots# with irregular site conditions or site planning constraints by special permit of the Board of Standards and Appeals, pursuant to Section 73-623 (Bulk modifications for Quality Housing buildings on irregular sites).

* * *

**34-10**
**APPLICABILITY OF RESIDENCE DISTRICT BULK REGULATIONS**

**34-11**
**General Provisions**

* * *

**34-112**
**Residential bulk regulations in other C1 or C2 Districts or in C3, C4, C5 or C6 Districts**

C1-6 C1-7 C1-8 C1-9 C2-6 C2-7 C2-8 C3 C4 C5 C6

In the districts indicated, the applicable #bulk# regulations are the #bulk# regulations for the #Residence

Districts# set forth in the following table:

| Districts | Applicable #Residence District# |
|---|---|
| C3 | R3-2 |
| C4-1 | R5 |
| C4-2 C4-3 C6-1A | R6 |
| C4-2A C4-3A | R6A |
| C1-6 C2-6 C4-4 C4-5 C6-1 | R7-2 |
| C1-6A C2-6A C4-4A C4-5A | R7A |
| C4-5D | R7D |
| C4-5X | R7X |
| C1-7 C4-2F C6-2 | R8 |
| C1-7A C4-4D C6-2A | R8A |
| C1-8 C2-7 C6-3 | R9 |
| C1-8A C2-7A C6-3A | R9A |
| C6-3D | R9D |
| C1-8X C2-7X C6-3X | R9X |
| C1-9 C2-8 C4-6 C4-7 C5 C6-4 C6-5 C6-6 C6-7 C6-8 C6-9 | R10 |
| C1-9A C2-8A C4-6A C4-7A C5-1A C5-2A C6-4A | R10A |
| C6-4X | R10X |

* * *

**34-20**
**EXCEPTIONS TO APPLICABILITY OF RESIDENCE DISTRICT CONTROLS**

* * *

**34-22**
**Modification of Floor Area and Open Space Regulations**

C1 C2 C3 C4 C5 C6

In the districts indicated, the #floor area# and #open space# regulations as set forth in Section 23-10 (OPEN SPACE AND FLOOR AREA REGULATIONS), inclusive, ~~Section 23-14 (Minimum Required Open Space, Open Space Ratio, Maximum Lot Coverage and Maximum Floor Area Ratio) and 23-15 (Maximum Floor Area Ratio in R10 Districts),~~ and made applicable to such districts in Section 34-11 (General Provisions), are modified as set forth in this Section.

* * *

**34-225**
**Floor area increase for Inclusionary Housing in C4-7 Districts within Community District 7, Borough of Manhattan**

Notwithstanding the provisions for R10 Districts in Community District 7 in the Borough of Manhattan set forth in Section 23-16 (Special Provisions for Certain Areas), in ~~In~~ C4-7 Districts within Community District 7 in the Borough of Manhattan, the maximum #residential floor area ratio# may be increased pursuant to the provisions of Section 23-154 and ~~total #floor area# permitted on a #zoning lot# under the provisions of Section 23-15 (Maximum Floor Area Ratio in R10 Districts) may be increased pursuant to the provisions of~~ Section 23-90 (INCLUSIONARY HOUSING).

* * *

**34-23**
**Modifications of Yard Regulations**

* * *

**34-233**
**Special provisions applying along district boundaries**

C1 C2 C3 C4 C5 C6

(a) In the districts indicated, if a #Commercial District# boundary coincides with a #side lot line# of a #zoning lot# in an R1, R2, R3, R4 or R5 District and a #side lot line# of any adjoining #zoning lot# in

such #Commercial District#, a #front yard# is required for the portion of ~~any #residential building# on~~ such #zoning lot# in the #Commercial District# within 25 feet of the district boundary. The depth of such #front yard# shall be equal to the required depth of a #front yard# in the adjacent #Residence District#.

C1 C2 C3 C4 C5 C6

(b) In the districts indicated, along such portion of the boundary of a #Commercial District# that coincides with a #side lot line# of a #zoning lot# in an R1, R2, R3, R4 or R5 District, an open area not higher than #curb level# with a width of at least eight feet is required for a #residential building# on a #zoning lot# within the #Commercial District#.

In addition, the provisions of paragraph (e) of Section 34-24 shall apply to such #building#.

**34-24**
**Modification of Height and Setback Regulations**

C1 C2 C3 C4 C5 C6

In the districts indicated, the height and setback regulations set forth in Article II, Chapter 3, and made applicable to such districts in Section 34-11 (General Provisions), are modified as set forth in this Section.

C1 C2 C3 C4 C5 C6

(a) Application of sky exposure planes

* * *

C4-2F C4-4 C4-5 C4-6 C4-7 C5 C6

(d) Special provisions for narrow #buildings#

In the districts indicated, the provisions of Section 23-692 (Height limitations for narrow buildings or enlargements) shall apply, subject to the additional rules and exceptions therein, only to #Quality Housing buildings#. However, in such districts, the #street wall# location provisions of paragraph (4) of such Section shall not apply ~~shall not apply to #buildings or other structures# except for #Quality Housing buildings#~~.

C1 C2 C3 C4 C5 C6

(e) Special provisions applying along district boundaries

The portion of a #Quality Housing building# located within 25 feet of the boundary of an R1, R2, R3, R4, R5 or R6B District shall comply with the provisions of Section 23-693 (Special provisions applying

adjacent to R1 through R6B Districts) ~~requirements for R6B Districts in paragraphs (b) and (c) of Section 23-633 (Street wall location and height and setback regulations in certain districts)~~.

C1 C2 C4 C5 C6

(f) For #Quality Housing buildings#

In the districts indicated, for #buildings# utilizing the #bulk# regulations for #Quality Housing buildings# in Article II, Chapter 3, the provisions of Section 23-66 (Height and Setback Requirements for Quality Housing buildings) shall be modified by the provisions of Section 35-65.

* * *

# Article III - Commercial District Regulations

**Chapter 5**
**Bulk Regulations for Mixed Buildings in Commercial Districts**

**35-00**
**APPLICABILITY AND DEFINITIONS**

**35-01**
**Applicability of this Chapter**

The #bulk# regulations of this Chapter apply to any #mixed building# located on any #zoning lot# or portion of a #zoning lot# in any #Commercial District# in which such #building# is permitted. The #bulk# regulations of this Chapter shall also apply in any #Commercial District# where there are multiple #buildings# on a single #zoning lot# and such #zoning lot# contains a #residential use# and either a #commercial use# or a #community facility use#. In addition, the #bulk# regulations of this Chapter, or of specified Sections thereof, also apply in other provisions of this Resolution where they are incorporated by cross-reference.

However, in C3A Districts, except for #community facility uses# that have received tax-exempt status from the New York City Department of Finance, or its successor, pursuant to Section 420 of the New York State Real Property Tax Law, or its successor, the #bulk# regulations of this Chapter shall not apply, and the #bulk# regulations for R3A Districts of Article II, Chapter 3, shall apply to any #building# that is used partly for #community facility use# and partly for #residential use#.

Existing #buildings or other structures# that do not comply with one or more of the applicable #bulk# regulations are #non-complying buildings or other structures# and are subject to the regulations set forth in Article V, Chapter 4.

Special regulations applying only in Special Purpose Districts are set forth in Articles VIII, IX, X, XI, XII and XIII.

All C6-1A Districts shall comply with the regulations of C6-1 Districts except as set forth in Section 35-23.

In Manhattan Community Districts 1, 2, 3, 4, 5 and 6, Brooklyn Community Districts 1, 2, 6 and 8, and Queens Community Districts l and 2, the #conversion# of non-#residential floor area# to #residences# in #buildings# erected prior to December 15, 1961, or January 1, 1977, as applicable, shall be subject to the provisions of Article I, Chapter 5 (Residential Conversion within Existing Buildings), unless such #conversions# meet the requirements for #residential development# of Article II (Residence District Regulations).

Special regulations applying in the #waterfront area# are set forth in Article VI, Chapter 2.

Special regulations applying in the #flood zone# are set forth in Article VI, Chapter 4.

**35-011**
**Quality Housing Program**

(a) In C1 and C2 Districts mapped within R6 through R10 Districts with a letter suffix, and in C1-6A, C1-7A, C1-8A, C1-8X, C1-9A, C2-6A, C2-7A, C2-7X, C2-8A, C4-2A, C4-3A, C4-4A, C4-4D, C4-4L, C4-5A, C4-5D, C4-5X, C4-6A, C4-7A, C5-1A, C5-2A, C6-2A, C6-3A, C6-3D, C6-3X, C6-4A or C6-4X Districts, all #buildings# shall comply with the #bulk# regulations for #Quality Housing buildings# set forth in this Chapter, and the applicable provisions of Article II, Chapter 8 (Quality Housing Program). ~~any #residential# portion of a #building# shall comply with all of the regulations of Article II, Chapter 8 (Quality Housing Program), and the entire #building# shall comply with the provisions of Sections 28-33 (Planting Areas) and 28-50 (PARKING FOR QUALITY HOUSING) .~~ In C1 and C2 Districts mapped within R5D Districts, only those regulations of Article II, Chapter 8, as set forth in Section 28-01 (Applicability of this Chapter), shall apply.

(b) In C1 and C2 Districts mapped within R6 through R10 Districts without a letter suffix and in other #Commercial Districts# with a residential equivalent of an R6 through R10 District without a letter suffix ~~the districts listed in paragraph (a), without a letter suffix, and in C5-2, C5-3, C5-4, C5-5, C6-1, C6-1A, C6-5, C6-6, C6-7, C6-8 or C6-9 Districts,~~ the #bulk# regulations applicable to #Quality Housing buildings# may, as an alternative, be applied ~~to the #residential# portion of a #building#~~ under the same conditions set forth in Sections 23-011, 35-22 and 35-23, provided that:

(1) the entire #building# complies with the #bulk# regulations for #Quality Housing buildings# set forth in this Chapter ~~in Article III, Chapter 5~~; and

(2) the entire #building# complies with the applicable provisions of Article II, Chapter 8 (Quality Housing Program).

(c) In C1 through C6 Districts, special regulations are set forth for #buildings# containing #long-term care facilities# or philanthropic or non-profit institutions with sleeping accommodations in Section 35-012 (Special Provisions for Certain Community Facility Uses).

(d) In #Commercial Districts#, for #Quality Housing buildings#, the applicable #bulk# regulations of this Chapter may be modified for #zoning lots# with irregular site conditions or site planning constraints by special permit of the Board of Standards and Appeals, pursuant to Section 73-623 (Bulk modifications for Quality Housing buildings on irregular sites).

**35-012**
**Special Provisions for Certain Community Facility Uses**

The provisions of this Section shall apply to #zoning lots# with #mixed buildings# containing #long-term care

facilities#, or philanthropic or non-profit institutions with sleeping accommodations, as listed in Use Group 3.

(a) #Buildings# containing #long-term care facilities#

(1) #Commercial Districts# with a residential equivalent of an R1 or R2 District

In C1 and C2 Districts mapped within R1 and R2 Districts, where a #long-term care facility# is authorized by the City Planning Commission pursuant to the provisions of Section 22-42, or permitted pursuant to Section 74-901, the #bulk# regulations of this Chapter shall apply. The maximum #floor area ratio# for such #long-term care facilities# shall not exceed the applicable #floor area ratio# of paragraph (b) of Section 33-121 (In districts with bulk governed by Residence District bulk regulations), except as permitted by the City Planning Commission pursuant to Section 74-902.

(2) #Commercial Districts# with a residential equivalent of an R3 through R5 District

In C1 and C2 Districts mapped within and R3 through R5 Districts, except R3A, R3X, R3-1, R4A, R4B, R4-1, R5A, and R5D districts, or in C3 or C4-1 Districts, the #bulk# regulations of Article II, Chapter 3 pertaining to #affordable independent residences for seniors#, inclusive, shall apply to #buildings#, or portion thereof, containing #long-term care facilities#. However, the City Planning Commission may permit the #bulk# regulations of this Chapter to apply pursuant to the special permit in Section 74-903 (Certain community facility uses in R3 to R9 Districts and certain Commercial Districts).

The #Residence District# within which such #Commercial Districts# are mapped, or the applicable residential equivalent set forth in the tables in Section 35-23 (Residential Bulk Regulations in Other C1 or C2 Districts or in C3, C4, C5 or C6 Districts) shall be used to determine the applicable residential #bulk# regulations of Article II, Chapter 3.

In C1 or C2 Districts mapped within R3A, R3X, R3-1, R4A, R4B, R4-1, R5A and R5D Districts, the applicable #bulk# regulations of this Chapter shall apply to #mixed buildings# containing #long term care facilities#. The maximum #floor area ratio# for such #long-term care facilities# shall be as set forth for certain #community facility uses# in paragraphs (d) and (e) of Section 33-121 (In districts with bulk governed by Residence District bulk regulations), , as applicable, except as permitted by the City Planning Commission pursuant to Section 74-903.

(3) #Commercial Districts# with a residential equivalent of an R6 through R10 district

In C1 or C2 Districts mapped within R6 through R10 Districts, or in #Commercial Districts# with a residential equivalent of an R6 through R10 District, the applicable #bulk# regulations for #Quality Housing buildings# in Article II, Chapter 3, pertaining to #affordable independent residences for seniors#, inclusive, shall apply to #buildings#, or portions thereof, containing #long-term care facilities#. However, the provisions of Section 23-66 (Height and Setback Requirements for Quality Housing Buildings) are modified by Section 35-65.

The #Residence District# within which such #Commercial Districts# are mapped, or the applicable residential equivalent set forth in the tables in Section 35-23 (Residential Bulk Regulations in Other C1 or C2 Districts or in C3, C4, C5 or C6 Districts) shall be used to determine the applicable residential #bulk# regulations of Article II, Chapter 3.

In C1 or C2 Districts mapped within R6 through R10 Districts without a letter suffix, or in #Commercial Districts# with a residential equivalent of an R6 through R10 District without a letter suffix, the City Planning Commission may permit the #bulk# regulations of this Chapter to apply to such #long-term care facilities# pursuant to the special permit in Section 74-903.

(b) #Buildings# containing philanthropic or non-profit institutions with sleeping accommodations

The maximum #floor area ratio# for the portion of a #mixed building# that contains a philanthropic or non-profit institution with sleeping accommodations shall be as set forth in paragraph (b) of Section 33-012 (Special Provisions for Certain Community Facility Uses).

In addition, for #buildings# in C1 or C2 Districts mapped within R6 and R7-1 Districts, except for R6A and R6B Districts, containing both #residential uses# and philanthropic or non-profit institutions with sleeping accommodations, the provisions of Section 35-311 (Maximum floor area and special provisions for mixed buildings or zoning lots containing community facility use in certain districts) shall not apply. In lieu thereof, the provisions of Section 35-31 (Maximum Floor Area Ratio) shall apply.

(c) Applicability of Quality Housing Program elements

For all #buildings# containing #long-term care facilities# that utilize the #bulk# regulations for #affordable independent residences for seniors# in Article II, Chapter 3, as modified by Section 35-65, and for #buildings# containing philanthropic or non-profit institutions with sleeping accommodations that utilize the height and setback regulations for #Quality Housing buildings# in Section 35-65, the Quality Housing Program, and the associated mandatory and optional program elements, shall apply to such #uses#, as modified by paragraph (d) of Section 28-01 (Applicability of this Chapter).

* * *

**35-20**
**APPLICABILITY OF RESIDENCE DISTRICT BULK REGULATIONS**

* * *

**35-22**
**Residential Bulk Regulations in C1 or C2 Districts Whose Bulk is Governed by Surrounding Residence District**

C1-1 C1-2 C1-3 C1-4 C1-5 C2-1 C2-2 C2-3 C2-4 C2-5

In the districts indicated, the #bulk# regulations for the #Residence Districts# within which such #Commercial Districts# are mapped apply to #residential# portions of #buildings#, except:

(a) when such districts are mapped within R1 or R2 Districts, the #bulk# regulations for R3-2 Districts shall apply; and

(b) when such districts are mapped within R6, R7, R8, R9 or R10 Districts, the height and setback regulations of 23-66 (Height and Setback Requirements for Quality Housing Buildings) ~~Sections 23-60 through 23-65~~, inclusive, shall be modified for #Quality Housing buildings# by the provisions of ~~not apply to #Quality Housing buildings#. In lieu thereof,~~ Section ~~35-24~~ 35-65 (Height and Setback Provisions for Quality Housing Buildings ~~Special Street Wall Location and Height and Setback Regulations in Certain Districts~~) ~~shall apply~~.

**35-23**
**Residential Bulk Regulations in Other C1 or C2 Districts or in C3, C4, C5 or C6 Districts**

C1-6 C1-7 C1-8 C1-9 C2-6 C2-7 C2-8 C3 C4 C5 C6

(a) In the districts indicated, the #bulk# regulations for #residential# portions of #buildings# are the #bulk# regulations for the #Residence Districts# set forth in the following table. However, for #Quality Housing buildings# the height and setback regulations of 23-66 (Height and Setback Requirements for Quality Housing Buildings) ~~Sections 23-60 through 23-65~~, inclusive, shall ~~not apply. In lieu thereof,~~ be modified by the provisions of Section ~~35-24~~ 35-65 (Height and Setback Requirements for Quality Housing Buildings ~~Special Street Wall Location and Height and Setback Regulations in Certain Districts~~) ~~shall apply~~.

~~The provisions of Section 23-692 (Height limitations for narrow buildings or enlargements) shall not apply in C4-2F, C4-4, C4-5, C4-6, C4-7, C5 or C6 Districts, except that such provisions shall apply to #Quality Housing buildings#.~~

In C4-2F, C4-4, C4-5, C4-6, C4-7, C5 or C6 Districts, the provisions of Section 23-692 (Height limitations for narrow buildings or enlargements), shall apply, subject to the additional rules and exceptions therein, only to #Quality Housing buildings#. However, in such districts, the #street wall# location provisions of paragraph (4) of such Section shall not apply.

Furthermore, in C4-2 Districts in the Borough of Staten Island, the #residential# portion of a #mixed building# and #residential buildings# on #zoning lots# subject to the provisions of this Chapter shall be subject to the #bulk# regulations for #Quality Housing buildings#.

| ~~Applicable #Residence District#~~ | ~~District#~~ |
|---|---|

| | |
|---|---|
| ~~R3-2~~ | ~~C3~~ |
| ~~R3A~~ | ~~C3A~~ |
| ~~R5~~ | ~~C4-1~~ |
| ~~R6~~ | ~~C4-2 C4-3 C6-1A~~ |
| ~~R7~~ | ~~C1-6 C2-6 C4-4 C4-5 C6-1~~ |
| ~~R8~~ | ~~C1-7 C4-2F C6-2~~ |
| ~~R9~~ | ~~C1-8 C2-7 C6-3~~ |
| ~~R10~~ | ~~C1-9 C2-8 C4-6 C4-7 C5 C6-4 C6-5 C6-6 C6-7 C6-8 C6-9~~ |

| District | Applicable #Residence District# |
|---|---|
| C3 | R3-2 |
| C3A | R3A |
| C4-1 | R5 |
| C4-2 C4-3 C6-1A | R6 |
| C1-6 C2-6 C4-4 C4-5 C6-1 | R7-2 |
| C1-7 C4-2F C6-2 | R8 |
| C1-8 C2-7 C6-3 | R9 |
| C1-9 C2-8 C4-6 C4-7 C5 C6-4 C6-5 C6-6 C6-7 C6-8 C6-9 | R10 |

C1-6A C1-7A C1-8A C1-8X C1-9A C2-6A C2-7A C2-7X C2-8A C4-2A C4-3A C4-4A C4-4D C4-4L C4-5A C4-5D C4-5X C4-6A C4-7A C5-1A C5-2A C6-2A C6-3A C6-3D C6-3X C6-4A C6-4X

(b) In the districts indicated, the #bulk# regulations for #residential# portions of #buildings# are the #bulk# regulations for the #Residence Districts# set forth in the following table. However, the height and setback regulations of 23-66 (Height and Setback Requirements for Quality Housing Buildings) ~~Sections 23-60 through 23-65~~, inclusive, shall be modified by the provisions of ~~not apply. In lieu thereof,~~ Section ~~35-24~~ 35-65 ~~shall apply~~.

| ~~Applicable #Residence District#~~ | ~~District~~ |
|---|---|
| ~~R6A~~ | ~~C4-2A C4-3A~~ |
| ~~R7A~~ | ~~C1-6A C2-6A C4-4A C4-4L C4-5A~~ |
| ~~R7D~~ | ~~C4-5D~~ |
| ~~R7X~~ | ~~C4-5X~~ |
| ~~R8A~~ | ~~C1-7A C4-4D C6-2A~~ |
| ~~R9A~~ | ~~C1-8A C2-7A C6-3A~~ |
| ~~R9D~~ | ~~C6-3D~~ |
| ~~R9X~~ | ~~C1-8X C2-7X C6-3X~~ |
| ~~R10A~~ | ~~C1-9A C2-8A C4-6A C4-7A C5-1A C5-2A C6-4A~~ |
| ~~R10X~~ | ~~C6-4X~~ |

| District | Applicable #Residence District# |
|---|---|
| C4-2A C4-3A | R6A |
| C1-6A C2-6A C4-4A C4-4L C4-5A | R7A |

| | |
|---|---|
| C4-5D | R7D |
| C4-5X | R7X |
| C1-7A C4-4D C6-2A | R8A |
| C1-8A C2-7A C6-3A | R9A |
| C6-3D | R9D |
| C1-8X C2-7X C6-3X | R9X |
| C1-9A C2-8A C4-6A C4-7A C5-1A C5-2A C6-4A | R10A |
| C6-4X | R10X |

**~~35-24~~**
**~~Special Street Wall Location and Height and Setback Regulations in Certain Districts~~**

~~C1-6A C1-7A C1-8A C1-8X C1-9A C2-6A C2-7A C2-7X C2-8A C4-2A C4-3A C4-4A C4-4D C4-4L C4-5A C4-5D C4-5X C4-6A C4-7A C5-1A C5-2A C6-2A C6-3A C6-3D C6-3X C6-4A C6-4X~~

~~In the districts indicated, and in other C1 or C2 Districts when mapped within R6A, R6B, R7A, R7B, R7D, R7X, R8A, R8B, R8X, R9A, R9D, R9X, R10A or R10X Districts, for all #buildings or other structures#, and for #Quality Housing buildings# in other #Commercial Districts#, #street wall# location and height and setback regulations are set forth in this Section. The height of all #buildings or other structures# shall be measured from the #base plane#.~~

~~(a) Permitted obstructions~~

~~C1-6A C1-7A C1-8A C1-8X C1-9A C2-6A C2-7A C2-7X C2-8A C4-2A C4-3A C4-4A C4-4D C4-4L C4-5A C4-5D C4-5X C4-6A C4-7A C5-1A C5-2A C6-2A C6-3A C6-3D C6-3X C6-4A C6-4X~~

~~In the districts indicated, and in other C1 or C2 Districts when mapped within R6A, R6B, R7A, R7B, R7D, R7X, R8A, R8B, R8X, R9A, R9D, R9X, R10A or R10X Districts, and for #Quality Housing buildings# in other #Commercial Districts#, the provisions of Section 33-42 shall apply to any #building or other structure#. In addition, a dormer may be allowed as a permitted obstruction pursuant to paragraph (c)(1) of Section 23-621 (Permitted obstructions in certain districts).~~

~~(b) #Street wall# location~~

~~C1-6A C2-6A C4-2A C4-3A C4-4A C4-5A C4-5X~~

~~(1) In the districts indicated, and in C1 or C2 Districts when mapped within R6A, R6B, R7A, R7B or R7X Districts, and for #Quality Housing buildings# in other #Commercial Districts# with a residential equivalent of an R6 or R7 District, at least 70 percent of the #aggregate width of street walls# shall be located within eight feet of the #street line# and shall extend to at least the minimum base height specified in Table A of this Section for #buildings# in contextual districts, or Table B for #buildings# in non-contextual districts, or the height of the #building#, whichever is less. The remaining 30 percent of the #aggregate width of street walls# may be located beyond eight feet of the #street line#.~~

~~Existing #buildings# may be horizontally #enlarged# without regard to #street wall# location provisions, provided the amount of new #floor area# does not exceed 50 percent of the amount of #floor area# existing on June 29, 1994, and the #enlarged# portion of the #building# does not exceed one #story# or 15 feet in height, whichever is less.~~

~~For #zoning lots# bounded by more than one #street line#, these #street wall# location provisions shall be mandatory along only one #street line#.~~

~~Where only one #street line# is coincident with the boundary of a #Commercial District# mapped along an entire #block# front, the #street wall# location provisions shall apply along such coincident #street line#. For all other #zoning lots#, the #street wall# location provisions shall apply along at least one #street line#.~~

~~C1-7A C1-8A C1-8X C1-9A C2-7A C2-7X C2-8A C4-4D C4-5D~~

~~(2) In the districts indicated, and in C1 or C2 Districts when mapped within R7D, R8A, R8B, R8X, R9A, R9D, R9X, R10A or R10X Districts, and for #Quality Housing buildings# in other C1 or C2 Districts with a residential equivalent of an R8, R9 or R10 District, the following #street wall# location provisions shall apply along #wide streets#, and along #narrow streets# within 50 feet of their intersection with a #wide street#.~~

(i) ~~The #street wall# shall be located on the #street line# and extend along the entire #street# frontage of the #zoning lot# up to at least the minimum base height specified in Table A of this Section for #buildings# in contextual districts, or Table B for #buildings# in non-contextual districts, or the height of the #building#, whichever is less. To allow articulation of #street walls# at the intersection of two #street lines#, the #street wall# may be located anywhere within an area bounded by the two #street lines# and a line connecting such #street lines# at points 15 feet from their intersection.~~

~~In C1 or C2 Districts when mapped within R9D Districts, to allow articulation of #street walls# at the intersection of two #street lines#, up to 50 percent of the area bounded by the two #street lines# and lines parallel to and 50 feet from such #street lines# may be~~

~~unoccupied by a #building#. However, where one such #street line# fronts an elevated rail line, a minimum of 25 percent and a maximum of 50 percent of the area bounded by the two #street lines# and lines parallel to and 50 feet from such #street lines# shall be unoccupied by a #building#.~~

~~(ii) Recesses, not to exceed three feet in depth from the #street line#, shall be permitted on the ground floor where required to provide access to the #building#.~~

~~Above a height of 12 feet above the #base plane#, up to 30 percent of the #aggregate width of street walls# may be recessed beyond the #street line#, provided any such recesses deeper than 10 feet along a #wide street#, or 15 feet along a #narrow street#, are located within an #outer court#. Furthermore, no recesses shall be permitted within 30 feet of the intersection of two #street lines# except to articulate the #street walls# as set forth in paragraph (b)(2)(i) of this Section.~~

~~(iii) Where a continuous sidewalk widening is provided along the entire #block# frontage of a #street#, the boundary of the sidewalk widening shall be considered to be the #street line# for the purposes of this Section.~~

~~No #street wall# location rules shall apply along #narrow streets# beyond 50 feet of their intersection with a #wide street#.~~

~~For the purposes of applying the provisions of paragraph (b) of this Section, where the New York City Administrative Code establishes restrictions on the location of #buildings# on lots fronting upon and within 30 feet of Eastern Parkway in Community Districts 8 and 9 in the Borough of Brooklyn, lines drawn 30 feet north of and 30 feet south of, and parallel to, Eastern Parkway shall be considered the northern and southern #street lines# of Eastern Parkway.~~

~~C4-6A C4-7A C5-1A C5-2A C6-2A C6-3A C6-3D C6-3X C6-4A C6-4X~~

~~(3) In the districts indicated, and for #Quality Housing buildings# in other C4, C5 or C6 Districts with a residential equivalent of an R8, R9 or R10 District, the #street wall# location requirements shall be as set forth in paragraph (b)(2), inclusive, of this Section, except that a #street wall# with a minimum height of 12 feet shall be required on a #narrow street line# beyond 50 feet of its intersection with a #wide street#, and shall extend along such entire #narrow street# frontage of the #zoning lot#.~~

~~In C6-4X Districts, #public plazas# are only permitted to front upon a #narrow street line# beyond 50 feet of its intersection with a #wide street line#. The #street wall# location provisions of this Section shall not apply along any such #street line# occupied by a #public plaza#.~~

~~In C6-3D Districts, to allow articulation of #street walls# at the intersection of two #street lines#, up to 50 percent of the area bounded by the two #street lines# and lines parallel to and 50 feet from such #street lines# may be unoccupied by a #building#. However, where one such #street~~

~~line# fronts an elevated rail line, a minimum of 25 percent and a maximum of 50 percent of the area bounded by the two #street lines# and lines parallel to and 50 feet from such #street lines# shall be unoccupied by a #building#.~~

~~C4-4L~~

~~(4) In C4-4L Districts, the #street wall# location provisions of paragraph (b)(1) of this Section shall apply along any #street# that does not contain an elevated rail line. For #zoning lots# bounded by a #street# containing an elevated rail line, the following regulations shall apply along the frontage facing the elevated rail line.~~

~~(i) A sidewalk widening shall be provided along the entire #zoning lot# frontage of such #street# containing an elevated rail line. Such sidewalk widening shall have a depth of five feet, be improved to Department of Transportation standards for sidewalks, be at the same level as the adjoining public sidewalk, and be accessible to the public at all times. A line parallel to and five feet from the #street line# of such #street# containing an elevated rail line, as measured within the #zoning lot#, shall be considered the #street line# for the purpose of applying all regulations of this Section, inclusive.~~

~~(ii) At least 70 percent of the #aggregate width of street walls# shall be located at the #street line# of the #street# containing the elevated rail line and extend to at least the minimum base height, or the height of the #building#, whichever is less, up to the maximum base height.~~

~~(c) Setback regulations~~

~~C1-6A C1-7A C1-8A C1-8X C1-9A C2-6A C2-7A C2-7X C2-8A C4-2A C4-3A C4-4A C4-4D C4-4L C4-5A C4-5D C4-5X C4-6A C4-7A C5-1A C5-2A C6-2A C6-3A C6-3D C6-3X C6-4A C6-4X~~

~~In the districts indicated, and in C1 or C2 Districts when mapped within R6A, R6B, R7A, R7B, R7D, R7X, R8A, R8B, R8X, R9A, R9D, R9X, R10A or R10X Districts, for all #buildings#, and for #Quality Housing buildings# in other #Commercial Districts#, setbacks are required for all portions of #buildings or other structures# that exceed the maximum base height specified in the table in this Section. Such setbacks shall be provided in accordance with the following regulations.~~

~~(1) At a height not lower than the minimum base height or higher than the maximum base height specified in Table A of this Section for #buildings# in contextual districts, and Table B for #buildings# in non-contextual districts, a setback with a depth of at least 10 feet shall be provided from any #street wall# fronting on a #wide street#, and a setback with a depth of at least 15 feet shall be provided from any #street wall# fronting on a #narrow street#, except such dimensions may include the depth of any permitted recesses in the #street wall#.~~

~~(2) These setback provisions are optional for any #building# wall that is either located beyond 50 feet~~

~~of a #street line# or oriented so that lines drawn perpendicular to it in plan would intersect a #street line# at an angle of 65 degrees or less. In the case of an irregular #street line#, the line connecting the most extreme points of intersection shall be deemed to be the #street line#. Furthermore, dormers provided in accordance with the provisions of paragraph (a) of this Section may penetrate a required setback area.~~

~~(3) In C6-3D Districts, for #buildings or other structures# on #zoning lots# that front upon an elevated rail line, at a height not lower than 15 feet or higher than 25 feet, a setback with a depth of at least 20 feet shall be provided from any #street wall# fronting on such elevated rail line, except that such dimensions may include the depth of any permitted recesses in the #street wall# and the depth of such setback may be reduced by one foot for every foot that the depth of the #zoning lot#, measured perpendicular to the elevated rail line, is less than 110 feet, but in no event shall a setback less than 10 feet in depth be provided above the minimum base height.~~

~~(i) The setback provisions of paragraph (c) of this Section are optional where a #building# wall is within the area bounded by two intersecting #street lines# and lines parallel to and 70 feet from such #street lines#.~~

~~(ii) Where such #building# is adjacent to a #public park#, such setback may be provided at grade for all portions of #buildings# outside of the area bounded by two intersecting #street lines# and lines parallel to and 70 feet from such #street lines#, provided that any area unoccupied by a #building# shall be improved to Department of Transportation standards for sidewalks, shall be at the same level as the adjoining public sidewalks, and shall be accessible to the public at all times.~~

~~(4) In C4-4L Districts, for #zoning lots# bounded by a #street# containing an elevated rail line, the setback provisions of this paragraph, (c), are modified as follows:~~

~~(i) a setback with a depth of at least 15 feet from the #street line# of the #street# containing the elevated rail line shall be provided at a height not lower than the minimum base height of either 30 feet or three #stories#, whichever is less, and not higher than the maximum base height of either 65 feet or six #stories#, whichever is less; and~~

~~(ii) dormers shall not be a permitted obstruction within such setback distance.~~

~~(d) Maximum #building# height~~

~~No #building or other structure# shall exceed the maximum #building# height specified in Table A of this Section for contextual districts, or Table B for non-contextual districts, except as provided in this paragraph, (d), inclusive.~~

~~C6-3D C6-4X~~

~~(1) In the districts indicated, any #building# or #buildings#, or portions thereof, which in the~~

~~aggregate occupy not more than 40 percent of the #lot area# of a #zoning lot# (or, for #zoning lots# of less than 20,000 square feet, the percentage set forth in the table in Section 33-454) above a height of 85 feet above the #base plane#, is hereinafter referred to as a tower. Dormers permitted within a required setback area pursuant to paragraph (a) of this Section shall not be included in tower #lot coverage#. Such tower or towers may exceed a height limit of 85 feet above the #base plane#, provided:~~

~~(i) at all levels, such tower is set back from the #street wall# of a base at least 15 feet along a #narrow street#, and at least 10 feet along a #wide street#, except such dimensions may include the depth of any permitted recesses in the #street wall#;~~

~~(ii) the base of such tower complies with the #street wall# location provisions of paragraph (b) of this Section, and the setback provisions of paragraph (c) of this Section; and~~

~~(iii) the minimum coverage of such tower above a height of 85 feet above the #base plane# is at least 33 percent of the #lot area# of the #zoning lot#; however, such minimum coverage requirement shall not apply to the highest 40 feet of such tower.~~

~~In C6-3D Districts, the highest four #stories#, or as many #stories# as are located entirely above a height of 165 feet, whichever is less, shall have a #lot coverage# of at least 50 percent of the #story# immediately below such #stories#, and a maximum #lot coverage# of 80 percent of the #story# immediately below such #stories#. Such reduced #lot coverage# shall be achieved by one or more setbacks on each face of the tower, where at least one setback on each tower face has a depth of at least four feet, and a width that, individually or in the aggregate, is equal to at least 10 percent of the width of such respective tower face. For the purposes of this paragraph, each tower shall have four tower faces, with each face being the side of a rectangle within which the outermost walls of the highest #story# not subject to the reduced #lot coverage# provisions have been inscribed. The required setbacks shall be measured from the outermost walls of the #building# facing each tower face. Required setback areas may overlap.~~

~~In C6-3D Districts, for towers fronting on elevated rail lines, the outermost walls of each #story# located entirely above a height of 85 feet shall be inscribed within a rectangle. The maximum length of any side of such rectangle that is parallel or within 45 degrees of being parallel to such elevated rail line shall be 125 feet, or 75 percent of the frontage of the #zoning lot# along such elevated rail line, whichever is less.~~

~~C4-4L~~

~~(2) In C4-4L Districts, for #zoning lots# bounded by a #street# containing an elevated rail line and within 125 feet of such #street#, the maximum #building# height shall be 100 feet or ten #stories#, whichever is less.~~

~~(e) Additional regulations~~

~~C1-6A C1-7A C1-8A C1-8X C1-9A C2-6A C2-7A C2-7X C2-8A C4-2A C4-3A C4-4A C4-4D C4-4L C4-5A C4-5D C4-5X C4-6A C4-7A C5-1A C5-2A C6-2A C6-3A C6-3D C6-3X C6-4A C6-4X~~

~~In the districts indicated, and in C1 or C2 Districts when mapped within R6A, R6B, R7A, R7B, R7D, R7X, R8A, R8B, R8X, R9A, R9D, R9X, R10A or R10X Districts, and for #Quality Housing buildings# in other #Commercial Districts#, the following additional provisions shall apply:~~

~~(1) Existing #buildings# may be vertically enlarged by up to one #story# or 15 feet without regard to the #street wall# location requirements of paragraph (b) of this Section.~~

~~(2) On #through lots# that extend less than 180 feet in maximum depth from #street# to #street#, the #street wall# location requirements of paragraph (b) shall be mandatory along only one #street# frontage. However, in C4-4L Districts, such #street wall# location regulations shall apply along the frontage of any #street# containing an elevated rail line.~~

~~(3) The #street wall# location and minimum base height provisions of paragraph (b) shall not apply along any #street# frontage of a #zoning lot# occupied by #buildings# whose #street wall# heights or widths will remain unaltered.~~

~~(4) The minimum base height provisions of paragraph (b) shall not apply to #buildings developed# or #enlarged# after February 2, 2011, that do not exceed such minimum base heights, except where such #buildings# are located on #zoning lots# with multiple #buildings#, one or more of which is #developed#, #enlarged# or altered after February 2, 2011, to a height exceeding such minimum base heights.~~

~~(5) The City Planning Commission may, upon application, authorize modifications in the required #street wall# location of a #development# or #enlargement# if the Commission finds that existing #buildings#, or existing open areas serving existing #buildings# to remain on the #zoning lot#, would be adversely affected by the location of the #street walls# of the #development# or #enlargement# in the manner prescribed in this Section.~~

~~(6) For any #zoning lot# located in a Historic District designated by the Landmarks Preservation Commission, the minimum base height and #street wall# location regulations of this Section, or as modified in any applicable Special District, shall be modified as follows:~~

~~(i) The minimum base height of a #street wall# may vary between the height of the #street wall# of an adjacent #building# before setback, if such height is lower than the minimum base height required, up to the minimum base height requirements of this Section, or as modified in any applicable Special District.~~

~~(ii) The maximum base height of a #street wall# may vary between the height of the #street wall# of an adjacent #building# before setback, if such height is higher than the maximum base height allowed, and the maximum base height requirements of this Section, provided that such height not exceed 150 feet and provided that such #zoning~~

~~lot# is located within the area bounded by West 22nd Street, a line 100 feet west of Fifth Avenue, a line midway between West 16th Street and West 17th Street, and a line 100 feet east of Sixth Avenue.~~

(ii) ~~The location of the #street wall# of any #building# may vary between the #street wall# location requirements of this Section, or as modified in any applicable Special District, and the location of the #street wall# of an adjacent #building# fronting on the same #street line#.~~

~~(7) In C6-3D Districts, where a #building# on an adjacent #zoning lot# has #dwelling unit# windows located within 30 feet of a #side lot line# of the #development# or #enlargement#, an open area extending along the entire length of such #side lot line# with a minimum width of 15 feet shall be provided. Such open area may be obstructed only by the permitted obstructions set forth in Section 33-23 (Permitted Obstructions in Required Yards or Rear Yard Equivalents).~~

~~(8) For the purposes of applying the #street wall# location regulations of paragraph (b), any #building# wall oriented so that lines perpendicular to it would intersect a #street line# at an angle of 65 degrees or less shall not be considered a #street wall#.~~

~~TABLE A~~
~~HEIGHT AND SETBACK FOR BUILDINGS~~
~~OR OTHER STRUCTURES~~
~~IN CONTEXTUAL DISTRICTS~~

| ~~District~~[5] | ~~Minimum Base Height~~ | ~~Maximum Base Height~~ | ~~Maximum #Building# Height~~ |
|---|---|---|---|
| ~~C1 or C2 mapped in R6B~~ | ~~30~~ | ~~40~~ | ~~50~~ |
| ~~C1 or C2 mapped in R6A C4-2A C4-3A~~ | ~~40~~ | ~~60~~ | ~~70~~ |
| ~~C1 or C2 mapped in R7B~~ | ~~40~~ | ~~60~~ | ~~75~~ |
| ~~C1 or C2 mapped in R7A C1-6A C2-6A C4-4A C4-4L C4-5A~~ | ~~40~~ | ~~65~~ | ~~80~~ |
| ~~C1 or C2 mapped in R7D C4-5D~~ | ~~60~~ | ~~85~~ | ~~100~~ |
| ~~C1 or C2 mapped in R7X C4-5X~~ | ~~60~~ | ~~85~~ | ~~125~~ |

| | | | |
|---|---|---|---|
| ~~C1 or C2 mapped in R8B~~ | ~~55~~ | ~~60~~ | ~~75~~ |
| ~~C1 or C2 mapped in R8A~~<br>~~C1-7A C4-4D C6-2A~~ | ~~60~~ | ~~85~~ | ~~120~~ |
| ~~C1 or C2 mapped in R8X~~ | ~~60~~ | ~~85~~ | ~~150~~ |
| ~~C1 or C2 mapped in R9A[2]~~<br>~~C1-8A[2] C2-7A[2] C6-3A[2]~~ | ~~60~~ | ~~95~~ | ~~135~~ |
| ~~C1 or C2 mapped in R9A[1]~~<br>~~C1-8A[1] C2-7A[1] C6-3A[1]~~ | ~~60~~ | ~~102~~ | ~~145~~ |
| ~~C1 or C2 mapped in R9D~~<br>~~C6-3D~~ | ~~60~~ | ~~85[4]~~ | ~~—[3]~~ |
| ~~C1 or C2 mapped in R9X[2]~~<br>~~C1-8X[2] C2-7X[2] C6-3X[2]~~ | ~~60~~ | ~~120~~ | ~~160~~ |
| ~~C1 or C2 mapped in R9X[1]~~<br>~~C1-8X[1] C2-7X[1] C6-3X[1]~~ | ~~105~~ | ~~120~~ | ~~170~~ |
| ~~C1 or C2 mapped in R10A[2]~~<br>~~C1-9A[2] C2-8A[2] C4-6A[2]~~<br>~~C4-7A[2] C5-1A[2] C5-2A[2]~~<br>~~C6-4A[2]~~ | ~~60~~ | ~~125~~ | ~~185~~ |
| ~~C1 or C2 mapped in R10A[1]~~<br>~~C1-9A[1] C2-8A[1] C4-6A[1] C4-7A[1] C5-1A[1] C5-2A[1] C6-4A[1]~~ | ~~125~~ | ~~150~~ | ~~210~~ |
| ~~C1 or C2 mapped in R10X~~<br>~~C6-4X~~ | ~~60~~ | ~~85~~ | ~~—[3]~~ |

~~———~~

~~[1] For #zoning lots# or portions thereof within 100 feet of a #wide street#~~

~~[2] For #zoning lots# on a #narrow street#, except portions of such #zoning lots# within a distance of 100 feet from an intersection with a #wide street# and, for #zoning lots# with only #wide- street# frontage, portions of such #zoning lots# beyond 100 feet of the #street~~

~~line#~~

~~[3] #Buildings# may exceed a maximum base height of 85 feet in accordance with paragraph (d) of this Section~~

~~[4] For #buildings or other structures# that front upon an elevated rail line, the maximum base height shall be 25 feet~~

~~[5] Where the New York City Administrative Code establishes restrictions on the location of #buildings# on lots fronting upon and within 30 feet of Eastern Parkway in Community Districts 8 and 9 in the Borough of Brooklyn, lines drawn 30 feet north of and 30 feet south of, and parallel to, Eastern Parkway shall be considered the northern and southern #street lines# of Eastern Parkway~~

~~TABLE B~~
~~HEIGHT AND SETBACK FOR BUILDINGS~~
~~IN NON-CONTEXTUAL DISTRICTS~~

| ~~District[3]~~ | ~~Minimum Base Height~~ | ~~Maximum Base Height~~ | ~~Maximum #Building# Height~~ |
|---|---|---|---|
| ~~C1 or C2 mapped in R6[2]~~<br>~~C4-2[2] C4-3[2]~~ | ~~30~~ | ~~45~~ | ~~55~~ |
| ~~C1 or C2 mapped in R6[1] inside #Manhattan Core#~~<br>~~C4-2[1] inside #Manhattan Core#~~<br>~~C4-3[1] inside #Manhattan Core#~~ | ~~40~~ | ~~55~~ | ~~65~~ |
| ~~C1 or C2 mapped in R6[1] outside #Manhattan Core#~~<br>~~C4-2[1] outside #Manhattan Core#~~<br>~~C4-3[1] outside #Manhattan Core#~~ | ~~40~~ | ~~60~~ | ~~70~~ |
| ~~C1 or C2 mapped in R7[2]~~<br>~~C1 or C2 mapped in R7[1] inside #Manhattan~~ | ~~40~~ | ~~60~~ | ~~75~~ |

| | | | |
|---|---|---|---|
| ~~Core#~~<br>~~C1-6[2] C1-6[1] inside #Manhattan Core#~~<br>~~C2-6[2] C2-6[1] inside #Manhattan Core#~~<br>~~C4-4[2] C4-4[1] inside #Manhattan Core#~~<br>~~C4-5[2] C4-5[1] inside #Manhattan Core#~~<br>~~C6-1[2] C6-1[1] inside #Manhattan Core#~~ | | | |
| ~~C1 or C2 mapped in R7[1] outside #Manhattan Core#~~<br>~~C1-6[1] outside #Manhattan Core#~~<br>~~C2-6[1] outside #Manhattan Core#~~<br>~~C4-4[1] outside #Manhattan Core#~~<br>~~C4-5[1] outside #Manhattan Core#~~<br>~~C6-1[1] outside #Manhattan Core#~~ | ~~40~~ | ~~65~~ | ~~80~~ |
| ~~C1 or C2 mapped in R8[2]~~<br>~~C1-7[2] C4-2F[2] C6-2[2]~~ | ~~60~~ | ~~80~~ | ~~105~~ |
| ~~C1 or C2 mapped in R8[1]~~<br>~~C1-7[1] C4-2F[1] C6-2[1]~~ | ~~60~~ | ~~85~~ | ~~120~~ |
| ~~C1 or C2 mapped in R9[2]~~<br>~~C1-8[2] C2-7[2] C6-3[2]~~ | ~~60~~ | ~~95~~ | ~~135~~ |
| ~~C1 or C2 mapped in R9[1]~~<br>~~C1-8[1] C2-7[1] C6-3[1]~~ | ~~60~~ | ~~102~~ | ~~145~~ |
| ~~C1 or C2 mapped in R10[2]~~<br>~~C1-9[2] C2-8[2] C4-6[2] C4-7[2] C5[2] C6-4[2] C6-5[2] C6-6[2] C6-7[2] C6-8[2] C6-9[2]~~ | ~~60~~ | ~~125~~ | ~~185~~ |
| ~~C1 or C2 mapped in R10[1]~~<br>~~C1-9[1] C2-8[1] C4-6[1] C4-7[1] C5[1] C6-4[1] C6-5[1] C6-6[1] C6-7[1]~~<br>~~C6-8[1] C6-9[1]~~ | ~~125~~ | ~~150~~ | ~~210~~ |

~~[1] For #zoning lots# or portions thereof within 100 feet of a #wide street#~~

~~[2] For #zoning lots# on a #narrow street#, except portions of such #zoning lots# within a distance of 100 feet from an intersection with a #wide street# and, for #zoning lots# with only #wide- street# frontage, portions of such #zoning lots# beyond 100 feet of the #street line#~~

~~[3] Where the New York City Administrative Code establishes restrictions on the location of #buildings# on lots fronting upon and within 30 feet of Eastern Parkway in Community Districts 8 and 9 in the Borough of Brooklyn, lines drawn 30 feet north of and 30 feet south of, and parallel to, Eastern Parkway shall be considered the northern and southern #street lines# of Eastern Parkway~~

**35-30**
**APPLICABILITY OF FLOOR AREA AND OPEN SPACE REGULATIONS**

**35-31**
**Maximum Floor Area Ratio**

C1 C2 C3 C4 C5 C6

In all districts, except as set forth in Section 35-311, the provisions of this Section shall apply to any #zoning lot# subject to the provisions of this Chapter.

The maximum #floor area ratio# permitted for a #commercial# or #community facility use# shall be as set forth in Article III, Chapter 3, and the maximum #floor area ratio# permitted for a #residential use# shall be as set forth in Article II, Chapter 3, provided the total of all such #floor area ratios# does not exceed the greatest #floor area ratio# permitted for any such #use# on the #zoning lot#.

Notwithstanding the provisions for R10 Districts in Community District 7 in the Borough of Manhattan set forth in Section 23-16 (Special Provisions for Certain Areas) ~~However~~, in C4-7 Districts within Community District 7 in the Borough of Manhattan, the ~~such~~ maximum #residential floor area ratio# may be increased pursuant to the provisions of Sections 23-154 and 23-90 (INCLUSIONARY HOUSING).

In #Inclusionary Housing designated areas#, except within Waterfront Access Plan BK-1 and R6 Districts without a letter suffix in Community District 1, Brooklyn, the maximum #floor area ratio# permitted for #zoning lots# containing #residential# and #commercial# or #community facility uses# shall be the base #floor area ratio# set forth in Section 23-154 ~~23-952~~ for the applicable district.

However, in #Inclusionary Housing designated areas# mapped within C4-7, C5-4, C6-3D and C6-4 Districts, the maximum base #floor area ratio# for #zoning lots# containing #residential# and #commercial# or #community facility uses# shall be either the base #floor area ratio# set forth in Section 23-154 ~~23-952~~ plus an amount equal to 0.25 times the non-#residential floor area ratio# provided on the #zoning lot#, or the maximum #floor area ratio# for #commercial uses# in such district, whichever is lesser.

The maximum base #floor area ratio# in #Inclusionary Housing designated areas# may be increased to the maximum #floor area ratio# set forth in Section 23-154 ~~23-952~~ only through the provision of #affordable housing# pursuant to Section 23-90, inclusive.

Where #floor area# in a #building# is shared by multiple #uses#, the #floor area# for such shared portion shall be attributed to each #use# proportionately, based on the percentage each #use# occupies of the total #floor area# of the #zoning lot# less any shared #floor area#.

A non-#residential use# occupying a portion of a #building# that was in existence on December 15, 1961, may be changed to a #residential use# and the regulations on maximum #floor area ratio# shall not apply to such change of #use#.

**35-311**
**Maximum floor area and special provisions for mixed buildings or zoning lots with multiple buildings containing community facility use in certain districts**

C1 C2

In C1 and C2 Districts mapped within R6 Districts without a letter suffix, ~~except R6A and R6B Districts,~~ and in R7-1 Districts, the provisions of this Section shall apply to any #zoning lot# where #residential# and #community facility uses# are located within the same #building#. However, this Section shall not apply to #buildings# containing #residences# and philanthropic or non-profit residences with sleeping accommodations, as set forth in Section 35-03 (Special Provisions for Certain Community Facility Uses).

* * *

~~**35-32**~~
~~**Modification of Lot Coverage Regulations**~~

~~In C4-4L Districts, the maximum #residential lot coverage# provisions of Sections 23-145 (For Quality Housing buildings) and 23-147 (For non-profit residences for the elderly) are modified, as follows:~~

~~(a) for #through lots# with a maximum depth of 180 feet or less, the maximum #residential lot coverage# shall be 80 percent; and~~

~~(b) #corner lots# shall not be subject to a maximum #residential lot coverage# where such #corner lots# are:~~

~~(1) 5,000 square feet or less in area; or~~

~~(2) 7,500 square feet or less in area and bounded by #street lines# that intersect to form an angle of less than 65 degrees, where one such #street# contains an elevated rail line.~~

* * *

**35-35**
**Floor Area Bonus for a Public Plaza or Arcade**

C1-8 C1-9 C2-7 C2-8 C4-6 C4-7 C5 C6

In the districts indicated, and in C1 and C2 Districts mapped within R9 or R10 Districts, #floor area# bonus provisions for #public plazas# and #arcades# shall apply as set forth in this Section. Any #floor area# bonus for a #public plaza# or #arcade# permitted under the applicable district regulations for any #residential#, #commercial# or #community facility# portion of a #building# may be applied, provided that any given #public plaza# or #arcade# shall be counted only once in determining a bonus.

C1-8A C1-8X C1-9A C2-7A C2-7X C2-8A C4-6A C4-7A C5-1A C5-2A C6-2A C6-3A C6-3X C6-4A

(a) Prohibition of #public plaza# and #arcade# bonuses

* * *

C4-6 C4-7 C5-1 C5-2 C5-4 C6-4 C6-5 C6-8

(c) In the districts indicated, except C6-4X Districts, if more than 50 percent of the #floor area# on the #zoning lot# is occupied by #residential uses#, then for each square foot of #public plaza# provided in accordance with Section 37-70, inclusive, the total #floor area# permitted on that #zoning lot# under the provision of Section 23-152 (Basic regulations for R10 Districts) ~~23-15 (Maximum Floor Area Ratio in R10 Districts)~~ may be increased by six square feet.

C4-6 C4-7 C5-1 C5-2 C5-4 C6-4 C6-5 C6-8

(d) In the districts indicated, if 50 percent or less of the #floor area# on the #zoning lot# is occupied by #residential uses#, then the provisions of Sections 33-13 and 33-14 shall apply.

C5-3 C5-5 C6-1 C6-2 C6-3 C6-6 C6-7 C6-9

(e) In the districts indicated, the provisions of Sections 33-13 and 33-14 shall apply.

C6-4X

(f) In the district indicated, if all #dwelling units# in the #building# are located above a height of 60 feet above the #base plane#, then the bonus provisions of Section 33-13 shall apply.

* * *

**35-40**

**APPLICABILITY OF DENSITY REGULATIONS**

C1 C2 C3 C4 C5 C6

In the districts indicated, the maximum number of #dwelling units# or ~~#rooming units#~~ on a #zoning lot# shall equal the maximum #residential floor area# permitted for the #zoning lot# determined in accordance with the provisions set forth in Section 35-30 (APPLICABILITY OF FLOOR AREA AND OPEN SPACE REGULATIONS) divided by the applicable factor in Section 23-20 (DENSITY REGULATIONS).

Illustrative Examples

The following examples, although not part of the Zoning Resolution, are included to demonstrate the application of density regulations to #mixed buildings#.

*  *  *

For a #mixed building# in a C4-6 District #developed# with a #public plaza# where less than 50 percent of the #floor area# on the #zoning lot# is occupied by #residential uses#, the maximum permitted #commercial# FAR is 4.08 (3.4 plus a 20 percent increase for a #public plaza#), the maximum permitted #community facility# FAR is 12.0 (10.0 plus a 20 percent increase for a #public plaza#), and the maximum permitted #residential# FAR is 10.0, provided the total FAR for all #uses# on the #zoning lot# does not exceed 12.0, pursuant to Section 35-30. On a 20,000 square foot #zoning lot developed# with 7.0 FAR of #community facility use# and no #commercial use#, the maximum #residential floor area ratio# permitted on such #zoning lot# is 5.0. The maximum number of #dwelling units# permitted on the #zoning lot# is 147 ~~126~~ (20,000 x 5 divided by a factor of 680 ~~790~~, pursuant to Section 23-22).

**35-50**
**MODIFICATION OF YARD REGULATIONS**

In #mixed buildings# with differing #yard# or #rear yard equivalent# requirements for different #uses#, the applicable #residential yard# and #rear yard equivalent# regulations shall apply at the lowest #story# containing #dwelling units# with windows facing onto such #residential yard# or #rear yard equivalent#, as applicable.

**35-51**
**Modification of Front Yard Requirements**

C1 C2 C3 C4 C5 C6

In the districts indicated, no #front yard# shall be required, except that the provisions of paragraph (a) of Section

34-233 (Special provisions applying along district boundaries) shall apply to portions of a #zoning lot# within 25 feet of a #Commercial District# boundary which coincides with a #side lot line# of a #zoning lot# in an R1 through R5 District ~~when #residential uses# are located on the first #story# of a #building#~~.

* * *

**35-60**
**MODIFICATION OF HEIGHT AND SETBACK REGULATIONS**

**35-61**
**~~Height and Setback Regulations~~**
**Applicability**

C1 C2 C3 C4 C5 C6

In the districts indicated, height and setback regulations are modified for #mixed buildings# in 35-60 (MODFICICATION OF HEIGHT AND SETBACK REGULATIONS), inclusive.

Height and setback modifications applicable to C1 or C2 Districts mapped within R1 through R5 Districts, and C3 and C4-1 Districts are set forth in Section 35-62.

Height and setback modifications applicable to C1 or C2 Districts mapped within R6 through R10 Districts, and #Commercial Districts# with a residential equivalent of R6 through R10 Districts, are set forth in Sections 35-63 (Basic Height and Setback Modifications), 35-64 (Special Tower Regulations for Mixed Buildings) and 35-65 (Height and Setback Requirements for Quality Housing Buildings), as applicable.

In C1 or C2 Districts mapped within R6A, R6B, R7A, R7B, R7D, R7X, R8A, R8B, R8X, R9A, R9D, R9X, R10A or R10X Districts, and in C1-6A, C1-7A, C1-8A, C1-8X, C1-9A, C2-6A, C2-7A, C2-7X, C2-8A, C4-2A, C4-3A, C4-4A, C4-4D, C4-4L, C4-5A, C4-5D, C4-5X, C4-6A, C4-7A, C5-1A, C5-2A, C6-2A, C6-3A, C6-3D, C6-3X, C6-4A or C6-4X Districts, all #buildings# shall comply with the #bulk# regulations for #Quality Housing buildings# set forth in Sections 23-62 (Permitted Obstructions) and 23-66 (Height and Setback Requirements for Quality Housing Buildings), as modified by Section 35-65. In C1 or C2 Districts mapped in R6 through R10 Districts without a letter suffix, or in other #Commercial Districts# with a residential equivalent of an R6 through R10 District, the #residential# portion of a #building# may be #developed# or #enlarged# pursuant to the basic height and setback requirements of Sections 23-62, 23-64 (Basic Height and Setback Requirements) or 23-65 (Tower Regulations), as modified by Sections 35-63 and 35-64, as applicable, or the entire #building# may #developed# or #enlarged# pursuant to the #bulk# regulations for #Quality Housing buildings#. All #Quality Housing buildings# shall also comply with additional provisions set forth in Article II, Chapter 8, as applicable.

~~In the districts indicated, height and setback regulations are modified as follows:~~

(a) ~~Except as otherwise provided in Section 35-51 (Modification of Front Yard Requirements), no #front yard# is required for any portion of a #building# in a #Commercial District#. Therefore, in applying the height and setback regulations, a#sky exposure plane# (which in a #Residence District# would be measured from a point above the #front yard line#) may be measured from a point above the #street line#.~~

~~(b) In cases where the provisions of Section 34-233, paragraph (a), apply, as set forth in Section 35-51, the #sky exposure plane# is measured from a point above the #front yard line#.~~

~~(c) In C1 or C2 Districts mapped within R3 or R4A Districts, the height and setback regulations applicable to R4 Districts, except R4A and R4B Districts, may be applied.~~

~~(d) In C1 or C2 Districts mapped within R4, R4B or R4-1 Districts, the height and setback regulations applicable to an R5B District may be applied.~~

~~(e) In C3A Districts, the height and setback regulations applicable to R3A Districts shall apply.~~

~~(f) In C1-8, C1-9, C2-7 or C2-8 Districts, or in C1 or C2 Districts mapped within R9 or R10 Districts, the provisions of Section 23-64 (Alternate Front Setbacks) shall not apply to any #development# or #enlargement# with more than 25 percent of its total #floor area# occupied by #residential use#.~~

**35-62**

**~~Maximum Height of Front Wall in Initial Setback Distance~~**

**<u>Commercial Districts with an R1 through R5 Residential Equivalent</u>**

C1 C2 C3 C4 ~~C5 C6~~

~~In the districts indicated, except in C1 or C2 Districts mapped within R2A, R2X, R3, R4 or R5 Districts and except in C3A Districts, the maximum height of a front wall within the #initial setback distance# shall be the maximum height of a front wall permitted in the applicable district for a #residential#, #commercial# or #community facility building#, whichever permits the greatest maximum height.~~

<u>In C1 or C2 Districts mapped within R1 through R5 Districts, and C3 and C4-1 Districts, height and setback regulations are modified as follows:</u>

<u>(a)</u> <u>No #front yard# is required for any portion of a #building# in a #Commercial District#, except as otherwise provided in Section 35-51 (Modification of Front Yard Requirements). Therefore, in applying the height and setback regulations in districts where the height of #buildings or other structures# is governed by #sky exposure planes#, such #sky exposure plane# (which in a #Residence District# would be measured from a point above the #front yard line#) may be measured from a point above the #street line#. The maximum height of a front wall within the #initial setback distance# permitted in the applicable district for a #residential#, #commercial# or #community facility building#, whichever permits the greatest maximum height;</u>

(b) In cases where the provisions of Section 34-233, paragraph (a), apply, as set forth in Section 35-51, the #sky exposure plane# is measured from a point above the #front yard line#;

(c) In C1 or C2 Districts mapped within R3 or R4A Districts, the height and setback regulations applicable to R4 Districts, except R4A and R4B Districts, may be applied;

(d) In C1 or C2 Districts mapped within R4, R4B or R4-1 Districts, the height and setback regulations applicable to an R5B District may be applied; and

(e) In C3A Districts, the height and setback regulations applicable to R3A Districts shall apply.

**35-63**
**Basic Height and Setback Modifications**

C1 C2 C4 C5 C6

In C1 or C2 Districts mapped within R6 through R10 District without a letter suffix, and in #Commercial Districts# with a residential equivalent of R6 through R10 without a letter suffix, height and setback regulations are modified as follows:

(a) No #front yard# is required for any portion of a #building# in a #Commercial District#, except as otherwise provided in Section 35-51 (Modification of Front Yard Requirements). Therefore, in applying the height and setback regulations in districts where the height of #buildings or other structures# is governed by #sky exposure planes#, such #sky exposure plane# (which in a #Residence District# would be measured from a point above the #front yard line#) may be measured from a point above the #street line#. The maximum height of a front wall within the #initial setback distance# shall be the maximum height for front walls permitted in the applicable district for a #residential#, #commercial# or #community facility building#, whichever permits the greatest maximum height;

(b) In cases where the provisions of Section 34-233, paragraph (a), apply, as set forth in Section 35-51, the #sky exposure plane# is measured from a point above the #front yard line#; and

(c) In C1-8, C1-9, C2-7 or C2-8 Districts, or in C1 or C2 Districts mapped within R9 or R10 Districts, the provisions of Section 23-642 (Alternate Front Setbacks) shall not apply to any #development# or #enlargement# with more than 25 percent of its total #floor area# occupied by #residential use#.

**~~35-63~~ 35-64**
**Special Tower Regulations for Mixed Buildings**

C1 C2 C4 C5 C6

In the districts indicated without a letter suffix, when a #mixed building# is subject to tower regulations, the #residential# tower regulations of paragraphs (a) and (b) or the #commercial# tower regulations of paragraph (c)

of this Section shall apply to the entire #building#.

*  *  *

(c) In C4-7, C5-2, C5-3, C5-4, C5-5, C6-4, C6-5, C6-6, C6-7, C6-8 or C6-9 Districts, the tower regulations applicable to any #mixed building# shall be the regulations set forth in Section 33-45.

However, in C4-7, C5-2, C5-4, C6-4, C6-5 or C6-8 Districts, when no more than two #stories# of a #mixed building# are occupied by non-#residential uses#, the tower regulations applicable to the #residential# portion of such #mixed building# may be governed by Section 23-652 (Standard tower regulations) or, for towers on small lots, the percentages set forth in Section 23-65 (Tower Regulations).

All #uses# within such #mixed building# shall comply with the provisions of Section 32-42.

~~The tower regulations shall not apply in C1 or C2 Districts mapped within R9A, R9X, R10A or R10X Districts, or in C1-8A, C1-8X, C1-9A, C2-7A, C2-7X, C2-8A, C4-6A, C4-7A, C5-1A, C5-2A, C6-2A, C6-3A, C6-3X, C6-4A or C6-4X Districts.~~

**35-65**
**Height and Setback Requirements for Quality Housing Buildings**

C1 C2 C4 C5 C6

In the districts indicated, the #street wall# location provisions of Sections 35-651 and the height and setback provisions of Section 35-652, shall apply to #Quality Housing buildings#. In certain districts, the heights set forth in Section 35-652 may be increased pursuant to either the provisions of Section 35-653 (Tower regulations) or 35-654 (Enhanced height and setback regulations for certain buildings), as applicable. Additional provisions are set forth in Section 35-655. The height of all #buildings or other structures# shall be measured from the #base plane#.

In all such districts, the permitted obstructions provisions of Section 33-42 shall apply to any #building or other structure#. In addition, a dormer may be allowed as a permitted obstruction pursuant to paragraph (c)(1) of Section 23-621 (Permitted obstructions in certain districts).

**35-651**
**Street wall location**

In the districts indicated, the #street wall# location provisions of paragraphs (a), (b) or (c) of this Section shall apply to all #Quality Housing buildings#, as applicable. Additional articulation provisions are set forth in paragraph (d) of this Section.

C1-6A C2-6A C4-2A C4-3A C4-4A C4-5A C4-5X

(a) In the districts indicated, and in C1 or C2 Districts when mapped within R6A, R6B, R7A, R7B or R7X Districts, and for #Quality Housing buildings# in other #Commercial Districts# with a residential equivalent of an R6 or R7 District, at least 70 percent of the #aggregate width of street walls# shall be located within eight feet of the #street line# and shall extend to at least the minimum base height specified in Section 35-652 and 23-662, or the height of the #building#, whichever is less. Up to 30 percent of the #aggregate width of street walls# may be recessed beyond eight feet of the #street line#, provided that any such recesses deeper than 10 feet along a #wide street# or 15 feet along a #narrow street# are located within an #outer court#.

Existing #buildings# may be horizontally #enlarged# without regard to #street wall# location provisions, provided the amount of new #floor area# does not exceed 50 percent of the amount of #floor area# existing on June 29, 1994, and the #enlarged# portion of the #building# does not exceed one #story# or 15 feet in height, whichever is less.

For #zoning lots# bounded by more than one #street line#, these #street wall# location provisions shall be mandatory along only one #street line#.

Where only one #street line# is coincident with the boundary of a #Commercial District# mapped along an entire #block# front, the #street wall# location provisions shall apply along such coincident #street line#. For all other #zoning lots#, the #street wall# location provisions shall apply along at least one #street line#.

Any #street wall# may be divided into different segments, and located at varying depths, to allow for #building# recesses, projections, #outer courts# and other forms of articulation, so long as each portion complies with the #street wall# location provision of this paragraph (a).

Recesses and projections beyond the #street wall# locations established in this paragraph are permitted only in accordance with paragraph (e) of this Section.

C1-7A C1-8A C1-8X C1-9A C2-7A C2-7X C2-8A C4-4D C4-5D C4-6A C4-7A C5-1A C5-2A C6-2A C6-3A C6-3X C6-4A C6-4X

(b) In the districts indicated, and in C1 or C2 Districts when mapped within R7D, R8A, R8B, R8X, R9A, R9X, R10A or R10X Districts, and for #Quality Housing buildings# in other C1, C2, C4, C5 or C6 Districts with a residential equivalent of an R8, R9 or R10 District, the following #street wall# location provisions shall apply along #wide streets#, and along #narrow streets# within 50 feet of their intersection with a #wide street#.

(1) The #street wall# shall be located on the #street line# and extend along the entire #street# frontage of the #zoning lot# up to at least the minimum base height specified in Section 35-652 and 23-662, or the height of the #building#, whichever is less. However, to allow articulation of #street walls# at the intersection of two #street lines#, the #street wall# may be located anywhere

within an area bounded by the two #street lines# and a line connecting such #street lines# at points 15 feet from their intersection, or, for #corner lots# with an angle of 75 degrees or less, at points 30 feet from their intersection.

In C6-4X Districts, #public plazas# are only permitted to front upon a #narrow street line# beyond 50 feet of its intersection with a #wide street line#. The #street wall# location provisions of this Section shall not apply along any such #street line# occupied by a #public plaza#.

(2) Above a height of 15 feet above the #base plane#, or the height of the first #story#, whichever is less, up to 30 percent of the #aggregate width of street walls# may be recessed beyond the #street line#, provided any such recesses deeper than 10 feet along a #wide street#, or 15 feet along a #narrow street#, are located within an #outer court#. Furthermore, no recesses shall be permitted within 30 feet of the intersection of two #street lines# except to articulate the #street walls# as set forth in paragraph (b)(1) of this Section.

(3) Where a continuous sidewalk widening is provided on the #zoning lot#, along the entire #block# frontage of a #street#, the boundary of the sidewalk widening shall be considered to be the #street line# for the purposes of this Section.

Along #narrow streets# beyond 50 feet of their intersection with a #wide street#, the #street wall# provisions of paragraph (a) of this Section shall apply.

Any #street wall# may be divided into different segments, and located at varying depths, to allow for #building# recesses, projections, #outer courts# and other forms of articulation, so long as each portion complies with the #street wall# location provision of this paragraph (b).

Recesses and projections beyond the #street wall# locations established in this paragraph are permitted only in accordance with paragraph (e) of this Section.

C4-4L

(c) In C4-4L Districts, the #street wall# location provisions of paragraph (a) of this Section shall apply along any #street# that does not contain an elevated rail line. For #zoning lots# bounded by a #street# containing an elevated rail line, the following regulations shall apply along the frontage facing the elevated rail line.

(1) A sidewalk widening shall be provided along the entire #zoning lot# frontage of such #street# containing an elevated rail line. Such sidewalk widening shall have a depth of five feet, be improved to Department of Transportation standards for sidewalks, be at the same level as the adjoining public sidewalk, and be accessible to the public at all times. A line parallel to and five feet from the #street line# of such #street# containing an elevated rail line, as measured within the #zoning lot#, shall be considered the #street line# for the purpose of applying all regulations of this Section, inclusive.

(2) At least 70 percent of the #aggregate width of street walls# shall be located at the #street line# of the #street# containing the elevated rail line and extend to at least the minimum base height, or the height of the #building#, whichever is less, up to the maximum base height.

Any #street wall# may be divided into different segments, and located at varying depths, to allow for #building# recesses, projections, #outer courts# and other forms of articulation, so long as each portion complies with the #street wall# location provision of this paragraph (c).

Recesses and projections beyond the #street wall# locations established in this paragraph are permitted only in accordance with paragraph (e) of this Section.

C6-3D

(d) In the districts indicated, and in C1 or C2 Districts when mapped within R9D Districts, for #developments# or #enlargements# on #zoning lots# fronting upon #wide streets#, or fronting upon #narrow streets# that include an elevated rail line, sidewalks, with a minimum depth of 20 feet measured perpendicular to the curb of the #street#, shall be provided along such entire #street# frontages of the #zoning lot#. In locations where the width of the sidewalk within the #street# is less than 20 feet, a sidewalk widening shall be provided on the #zoning lot# so that the combined width of the sidewalk within the #street# and the sidewalk widening equals 20 feet. However, existing #buildings# to remain on the #zoning lot# need not be removed in order to comply with this requirement. All sidewalk widenings shall be improved to Department of Transportation standards for sidewalks, shall be at the same level as the adjoining public sidewalks, and shall be accessible to the public at all times. In addition, the provisions of paragraphs (f)(2) through (f)(5) of Section 37-53 (Design Standards for Pedestrian Circulation Spaces) shall apply.

The following #street wall# location provisions shall apply along #wide streets#, and along #narrow streets# within 50 feet of their intersection with a #wide street#.

(1) The #street wall# shall be located on the #street line# and extend along the entire #street# frontage of the #zoning lot# up to at least the minimum base height specified in Section 35-652, or the height of the #building#, whichever is less. To allow articulation of #street walls# at the intersection of two #street lines#, up to 50 percent of the area bounded by the two #street lines# and lines parallel to and 50 feet from such #street lines# may be unoccupied by a #building#. However, where one such #street line# fronts an elevated rail line, a minimum of 25 percent and a maximum of 50 percent of the area bounded by the two #street lines# and lines parallel to and 50 feet from such #street lines# shall be unoccupied by a #building#.

(2) Above a height of 15 feet above the #base plane#, or the height of the first #story#, whichever is less, up to 30 percent of the #aggregate width of street walls# may be recessed beyond the #street line#, provided any such recesses deeper than 10 feet along a #wide street#, or 15 feet along a #narrow street#, are located within an #outer court#. Furthermore, no recesses shall be permitted within 30 feet of the intersection of two #street lines# except to articulate the #street walls# as set forth in paragraph (b)(1) of this Section.

(3) Where a continuous sidewalk widening is provided along the entire #block# frontage of a #street#, the boundary of the sidewalk widening shall be considered to be the #street line# for the purposes of this Section.

Along #narrow streets# beyond 50 feet of their intersection with a #wide street#, the #street wall# provisions of paragraph (a) of this Section shall apply.

Any #street wall# may be divided into different segments, and located at varying depths, to allow for #building# recesses, projections, #outer courts# and other forms of articulation, so long as each portion complies with the #street wall# location provision of this paragraph (d).

Recesses and projections beyond the #street wall# locations established in this paragraph are permitted only in accordance with paragraph (e) of this Section.

C1 C2 C4 C5 C6

(e) #Street wall# articulation, including, but not limited to, window recesses and structural expression on the #building# facade, shall be permitted to project or recess beyond the #street wall# locations established in paragraphs (a), (b) or (c) of this Section, provided such articulation does not exceed a depth or projection of twelve inches, or extends beyond the #street line#. In addition, to accommodate other forms of #street wall# articulation, such as bay windows, and facade recesses, up to 50 percent of the #aggregate width of street wall#, at any level, may recess or project beyond such #street wall# location provisions of this Section, provided that no such recess or projection exceeds a depth of three feet, as measured perpendicular from the #street wall#, or portion thereof. No projection shall extend beyond the #street line#, except where encroachments into the public right-of-way are permitted by the New York City Administrative Code.

**35-652**
**Maximum height of buildings and setback regulations**
C1 C2 C4 C5 C6

In the districts indicated, a #Quality Housing buildings or other structure# shall not exceed the district height limit, or the maximum number of permitted #stories#, whichever is lower, specified in the Table in Section 23-662 (Maximum height of buildings and setback regulations) for the #Residence District# within which such #Commercial District# is mapped, or the applicable residential equivalent set forth in the tables in Section 35-23 (Residential Bulk Regulations in Other C1 or C2 Districts or in C3, C4, C5 or C6 Districts), except as modified in paragraph (b) below or as further provided in this Chapter. Separate maximum #building# heights are set forth within such Table for #developments# or #enlargements# with #qualifying ground floors# and for those with #non-qualifying ground floors#.

A setback is required for all portions of #buildings or other structures# that exceed the maximum base height specified for the applicable residential equivalent in such Table in Section 23-662, and shall be provided in

accordance with the regulations set forth in Section 23-662 for the applicable #Residence District# within which such #Commercial Districts# are mapped, or the applicable residential equivalent, except as modified in paragraph (a) below.

(a) Setback modifications

(1) In C6-3D Districts, the provisions for R9D Districts set forth in 23-662 shall apply, except that:

(i) The setback provisions of paragraph (c) of this Section are optional where a #building# wall is within the area bounded by two intersecting #street lines# and lines parallel to and 70 feet from such #street lines#; and

(ii) Where such #building# is adjacent to a #public park#, such setback may be provided at grade for all portions of #buildings# outside of the area bounded by two intersecting #street lines# and lines parallel to and 70 feet from such #street lines#, provided that any area unoccupied by a #building# shall be improved to Department of Transportation standards for sidewalks, shall be at the same level as the adjoining public sidewalks, and shall be accessible to the public at all times.

(2) In C4-4L Districts, for #zoning lots# bounded by a #street# containing an elevated rail line, the following shall apply:

(i) a setback with a depth of at least 15 feet from the #street line# of the #street# containing the elevated rail line shall be provided at a height not lower than the minimum base height of either 25 feet or two #stories#, whichever is less, and not higher than the maximum base height of either 65 feet or six #stories#, whichever is less; and

(ii) dormers shall not be a permitted obstruction within such setback distance.

(b) Maximum height modifications

(1) In C6-3D and C6-4X Districts, the maximum base heights for the applicable residential equivalents may be exceeded in accordance with the tower regulations of Section 35-653 (Tower regulations).

(2) In C4-4L Districts, for #zoning lots# bounded by a #street# containing an elevated rail line and within 125 feet of such #street#, the maximum #building# height for a #building# with a #qualifying ground floor# shall be 105 feet or ten #stories#, whichever is less. For #buildings# with #non-qualifying ground floors#, the maximum height shall be reduced to 100 feet.

**35-653**
**Tower regulations**
C6-3D C6-4X

In the districts indicated, any #building or other structure#, or portions thereof, which in the aggregate occupies not more than 40 percent of the #lot area# of a #zoning lot# (or, for #zoning lots# of less than 20,000 square feet, the percentage set forth in the table in Section 23-651), above a height of 85 feet above the #base plane#, is hereinafter referred to as a tower. Dormers permitted within a required setback area pursuant to Section 23-621 (Permitted obstructions in certain districts) shall not be included in tower coverage. Such tower may exceed a height limit of 85 feet above the #base plane# provided the base of such tower complies with the applicable provisions of Section 32-241 (Street wall location) and this Section, and provided that the tower portion complies with the provisions of paragraphs (a), (b) and (c) of Section 23-663 (Tower regulations).

**35-654**

**Modified height and setback regulations for certain buildings**

C1 C2 C4 C5 C6

In the districts indicated, for #development# or #enlargements# of #Quality Housing buildings# on #zoning lots# providing either #affordable housing# pursuant to the Inclusionary Housing Program, as set forth in Section 23-90, inclusive, or #affordable independent residences for seniors#, where at least 20 percent of the #floor area# of the #zoning lot# is allocated to such #use#, the provisions of this Section shall apply.

For all such #Quality Housing buildings#, the maximum base and #building# heights established in Sections 35-652 (Maximum height of buildings and setback regulations) and 23-662 shall be modified in accordance with the Table in paragraph (a) of Section 23-664 for the #Residence District# within which such #Commercial Districts# are mapped, or the applicable residential equivalent set forth in the tables in Section 35-23 (Residential Bulk Regulations in Other C1 or C2 Districts or in C3, C4, C5 or C6 Districts). Separate maximum #building# heights are set forth within such Table for #developments# or #enlargements# with #qualifying ground floors# and for those with #non-qualifying ground floors#.

However, for C4-4L Districts, the maximum #building height# shall be increased to 115 feet for #buildings# with #qualifying ground floors#, or eleven #stories#, whichever is less for #buildings# with #non-qualifying ground floors#. For #buildings# with #non-qualifying ground floors#, the maximum height shall be reduced to 110 feet.

For such #Quality Housing buildings# containing #affordable independent residences for seniors# in C1 or C2 districts mapped within R6 through R8 districts without a letter suffix or in other #Commercial Districts# with a residential equivalent of an R6 though R8 district without a suffix, the #street wall# location and height and setback provisions of 35-651 and 35-652 need not apply to #buildings# on #zoning lots# that are located within 150 feet of: an elevated rail line; an open railroad right of way; a limited-access expressway, freeway, parkway, or highway, all of which prohibit direct vehicular access to abutting land; or an elevated #street# located on a bridge that prohibits direct vehicular access. Such 150 foot measurement shall be measured perpendicular from the edge of such infrastructure. In lieu thereof, the alternative height and setback regulations set forth in paragraph (b) of Section 23-664 shall apply.

**35-655**

**Additional regulations**
C1 C2 C4 C5 C6

In the districts indicated, for #Quality Housing buildings#, the following additional provisions shall apply:

(a) Existing #buildings# may be vertically enlarged by up to one #story# or 15 feet without regard to the #street wall# location requirements of Section 35-651.

(b) On #through lots# that extend less than 180 feet in maximum depth from #street# to #street#, the #street wall# location requirements of Section 35-651 shall be mandatory along only one #street# frontage. However, in C4-4L Districts, such #street wall# location regulations shall apply along the frontage of any #street# containing an elevated rail line.

(c) The #street wall# location and minimum base height provisions of Sections 35-651 and 35-652, respectively, shall not apply along any #street# frontage of a #zoning lot# occupied by #buildings# whose #street wall# heights or widths will remain unaltered.

(d) The minimum base height provisions of Section 35-652 shall not apply to #buildings developed# or #enlarged# after February 2, 2011, that do not exceed such minimum base heights, except where such #buildings# are located on #zoning lots# with multiple #buildings#, one or more of which is #developed#, #enlarged# or altered after February 2, 2011, to a height exceeding such minimum base heights.

(e) The City Planning Commission may, upon application, authorize modifications in the required #street wall# location of a #development# or #enlargement# if the Commission finds that existing #buildings#, or existing open areas serving existing #buildings# to remain on the #zoning lot#, would be adversely affected by the location of the #street walls# of the #development# or #enlargement# in the manner prescribed in this Section.

(f) For any #zoning lot# located in a Historic District designated by the Landmarks Preservation Commission, the minimum base height and #street wall# location regulations of this Section, or as modified in any applicable Special District, shall be modified as follows:

(1) The minimum base height of a #street wall# may vary between the height of the #street wall# of an adjacent #building# before setback, if such height is lower than the minimum base height required, up to the minimum base height requirements of Section 35-652, or as modified in any applicable Special District.

(2) The maximum base height of a #street wall# may vary between the height of the #street wall# of an adjacent #building# before setback, if such height is higher than the maximum base height allowed, and the maximum base height requirements of Section 35-652, provided that such height not exceed 150 feet and provided that such #zoning lot# is located within the area bounded by West 22nd Street, a line 100 feet west of Fifth Avenue, a line midway between West 16th Street and West 17th Street, and a line 100 feet east of Sixth Avenue.

(3) The location of the #street wall# of any #building# may vary between the #street wall# location requirements of Section 35-651, or as modified in any applicable Special District, and the location of the #street wall# of an adjacent #building# fronting on the same #street line#.

(g) In C6-3D Districts, where a #building# on an adjacent #zoning lot# has #dwelling unit# windows located within 30 feet of a #side lot line# of the #development# or #enlargement#, an open area extending along the entire length of such #side lot line# with a minimum width of 15 feet shall be provided. Such open area may be obstructed only by the permitted obstructions set forth in Section 33-23 (Permitted Obstructions in Required Yards or Rear Yard Equivalents).

(h) For the purposes of applying the #street wall# location regulations of paragraph (b), any #building# wall oriented so that lines perpendicular to it would intersect a #street line# at an angle of 65 degrees or less shall not be considered a #street wall#.

(i) For the purposes of applying the #street wall# location as well as the height and setback provisions of Sections 35-651 and 35-652, respectively, where the Administrative Code establishes restrictions on the location of #buildings# on lots fronting upon and within 30 feet of Eastern Parkway in Community Districts 8 and 9 in the Borough of Brooklyn, lines drawn 30 feet north of and 30 feet south of, and parallel to, Eastern Parkway shall be considered the northern and southern #street lines# of Eastern Parkway.

* * *

# Article III - Commercial District Regulations

**Chapter 6**
**Accessory Off-Street Parking and Loading Regulations**

* * *

**36-00**
**GENERAL PURPOSES AND DEFINITIONS**

Off-Street Parking Regulations

* * *

**36-02**
**Applicability of District Regulations**

* * *

**36-021**
**Applicability of regulation to non-profit hospital staff dwellings**

~~Except as modified in Sections 36-313 (Application of requirements to non-profit hospital staff dwellings in C1 or C2 Districts with bulk governed by surrounding Residence District) or 36-314 (Application of requirements to non-profit hospital staff dwellings in other Commercial Districts), the district regulations applicable to #residences#, as set forth in this Chapter, shall apply to #non-profit hospital staff dwellings#, and the district regulations applicable to #community facility uses#, as set forth in this Chapter, shall not apply to such #use#. Except as modified in Section 36-314, the regulations of this Chapter applicable to #residences# in C4-2 Districts shall apply to #non-profit hospital staff dwellings# in C8 Districts.~~ In all districts, the regulations of this Chapter applicable to #community facility uses# shall not apply to #non-profit hospital staff dwellings#. In lieu thereof, the regulations applicable to #residences# shall apply, as follows:

(a) the regulations of a C4-1 District shall apply to #non-profit hospital staff dwellings# located in C1 or C2 Districts mapped within R1, R2 and R3 Districts, and to C3 Districts;

(b) the regulations of a C4-2 District shall apply to #non-profit hospital staff dwellings# located in C1 or C2 Districts mapped within R4 and R5 Districts, and to C4-1 and C8-1 Districts; and

(c) the regulations of a C4-7 District shall apply to #non-profit hospital staff dwellings# located in C1 or C2 Districts mapped within R6 through R10 Districts, and to C1-6, C1-7, C1-8, C1-9, C2-6, C2-7, C2-8, C4-2, C4-3, C4-4, C4-5, C4-6, C4-7, C5, C6, C8-2, C8-3, and C8-4 Districts.

*  *  *

**36-026**
**Applicability of regulations to Quality Housing**

On any #zoning lot# containing a #Quality Housing building#, all #accessory# off-street parking spaces shall comply with the provisions of Section ~~28-50~~ 28-40 (PARKING FOR QUALITY HOUSING), inclusive.

*  *  *

**36-20**
**REQUIRED ACCESSORY OFF-STREET PARKING SPACES FOR COMMERCIAL OR COMMUNITY FACILITY USES**

**36-21**
**General Provisions**

C1 C2 C3 C4 C5 C6 C7 C8

In all districts, as indicated, #accessory# off-street parking spaces, open or enclosed, shall be provided in conformity with the requirements set forth in the table in this Section for all #developments# after December 15, 1961, for the #commercial# or #community facility uses# listed in the table. If an #enlargement# results in a net increase in the #floor area# or other applicable unit of measurement specified in the table, the same requirements set forth in the table shall apply to such net increase in the #floor area# or other specified unit of measurement. In addition, all other applicable requirements of this Chapter shall apply as a condition precedent to the #use# of such #development# or #enlargement#.

*  *  *

REQUIRED OFF-STREET PARKING SPACES FOR COMMERCIAL
OR COMMUNITY FACILITY USES

| Type of #Use# | Parking Spaces Required in Relation to Specified Unit of Measurement | - Districts |
|---|---|---|

*  *  *

FOR COMMUNITY FACILITY USES

*  *  *

Philanthropic or non-profit institutions with sleeping accommodations; #long-term care facilities# ~~all types of nursing homes or sanitariums~~

None required - C1-4 C1-5 C1-6 C1-7 C1-8 C1-9 C2-4 C2-5 C2-6
C2-7 C2-8 C4-4 C4-5 C4-6 C4-7 C5 C6

1 per 10 beds - C1-1 C1-2 C2-1 C2-2 C3 C4-1 C4-2

1 per 20 beds - C1-3 C2-3 C4-2A C4-3

*  *  *

**36-23**
**Waiver of Requirements for Spaces below Minimum Number**

*  *  *

**36-231**
**In districts with high, medium, or low parking requirements**

C1-1 C1-2 C1-3 C2-1 C2-2 C2-3 C3 C4-1 C4-2 C4-3 C7 C8-1 C8-2

In the districts indicated, except for the #uses# listed in Section 36-233 (Exceptions to application of waiver provisions), and except as otherwise provided in Section 36-27 (Waiver for Certain Small Zoning Lots), the parking requirements set forth in Sections 36-21 (General Provisions) or 36-22 (Special Provisions for a Single Zoning Lot with Uses Subject to Different Parking Requirements) shall not apply to #commercial uses# in parking requirement category A, B, B1, C, D, E, or H, or to permitted #community facility uses#, if the total number of #accessory# off-street parking spaces required for all such #uses# on the #zoning lot# is less than the number of spaces set forth in the following table:

| ~~Number of Spaces~~ | ~~Districts~~ |
|---|---|
| ~~10~~ | ~~C1-1 C2-1 C3 C4-1~~ |

| | |
|---|---|
| ~~15~~ | ~~C1-2 C2-2 C4-2 C8-1~~ |
| ~~25~~ | ~~C1-3 C2-3 C4-2A C4-3 C7 C8-2~~ |

| Districts | Number of Spaces |
|---|---|
| C1-1 C2-1 C3 C4-1 | 10 |
| C1-2 C2-2 C4-2 C8-1 | 15 |
| C1-3 C2-3 C4-2A C4-3 C7 C8-2 | 25 |

* * *

**36-30**
**REQUIRED ACCESSORY OFF-STREET PARKING SPACES FOR RESIDENCES WHEN PERMITTED IN COMMERCIAL DISTRICTS**

**36-31**
**General Provisions**

C1 C2 C3 C4 C5 C6

In all districts, as indicated, #accessory# off-street parking spaces, open or enclosed, shall be provided for all #dwelling units# ~~or #rooming units#~~ created constructed after December 15, 1961, in accordance with the provisions of the following Sections and the other applicable provisions of this Chapter, as a condition precedent to the #use# of such #dwelling unit~~# or #rooming unit#~~:

| | |
|---|---|
| Section 36-32 | (Requirements Where Individual Parking Facilities Are Provided) |
| Section 36-33 | (Requirements Where Group Parking Facilities Are Provided) |
| Section 36-34 | (Modification of Requirements for Small Zoning Lots) |
| Section 36-35 | (Modification of Requirements for Income-Restricted Housing Units or Affordable Independent Residences for Seniors ~~Public Housing or Non-profit Residences for Elderly~~) |

Section 36-37 (Special Provisions for a Single Zoning Lot with Uses Subject to Different Parking Requirements)

Section 36-39 (Special Provisions for Zoning Lots Divided by District Boundaries)

For #dwelling units# or #rooming units# constructed pursuant to the zoning regulations in effect after July 20, 1950, and prior to December 15, 1961, off-street parking spaces #accessory# to such #dwelling units# or #rooming units# cannot be removed if such spaces were required by such zoning regulations, unless such spaces would not be required pursuant to the applicable zoning regulations currently in effect.

~~For the purposes of these Sections, three #rooming units# shall be considered the equivalent of one #dwelling unit#.~~

**36-311**
**Application of requirements to conversions in C1 or C2 Districts**

C1 C2

(a) In the districts indicated, where such districts are mapped within R1, R2, R3, R4, R5, R6 or R7 Districts, except R7-2 Districts, the requirements of Section 36-31 (General Provisions) shall not apply to the additional #dwelling units# ~~or #rooming units#~~ created by #conversions# on #zoning lots# with less than 5,000 square feet of #lot area#.

(b) In the districts indicated, where such districts are mapped within R7-2, R8, R9 or R10 Districts, the requirements of Section 36-31 shall not apply to the additional #dwelling units# ~~or #rooming units#~~ created by #conversions# on #zoning lots# of any size.

**36-312**
**Application of requirements to conversions in C3, C4, C5 and C6 Districts**

C3 C4-1 C4-2 C4-3

(a) In the districts indicated, the requirements of Section 36-31 (General Provisions) shall not apply to the additional #dwelling units# ~~or #rooming units#~~ created by #conversions# on #zoning lots# with less than 5,000 square feet of #lot area#.

C4-4 C4-5 C4-6 C4-7 C5 C6

(b) In the districts indicated, no #accessory# off-street parking is required for additional #dwelling units# ~~or #rooming units#~~ created by #conversion# within #buildings# existing prior to December 15, 1961.

~~**36-313**~~

~~**Application of requirements to non-profit hospital staff dwellings in C1 or C2 Districts with bulk governed by surrounding Residence Districts**~~

~~C1-1 C1-2 C1-3 C1-4 C1-5 C2-1 C2-2 C2-3 C2-4 C2-5~~

~~In the districts indicated, the regulations of Sections 36-31 to 36-39, inclusive, relating to Required Accessory Off-Street Parking Spaces for Residences When Permitted in Commercial Districts, shall apply as set forth in this Section to #non-profit hospital staff dwellings#. The district regulations of these Sections applicable to #non-profit hospital staff dwellings# are determined by the #Residence District# within which such #Commercial Districts# are mapped in accordance with the following table, and are the same as the regulations applicable to #residences# in the districts indicated in the right-hand column of the table.~~

~~DISTRICT REGULATIONS APPLICABLE TO~~
~~NON-PROFIT HOSPITAL STAFF DWELLINGS~~

| ~~#Residence District# within which C1 or C2 District is Mapped~~ | ~~District Whose Regulations are Applicable~~ |
|---|---|
| ~~R1 R2 R3~~ | ~~C4-1~~ |
| ~~R4 R5~~ | ~~C4-2~~ |
| ~~R6 R7 R8 R9 R10~~ | ~~C4-7~~ |

~~**36-314**~~

~~**Application of requirements to non-profit hospital staff dwellings in other Commercial Districts**~~

~~C1-6 C1-7 C1-8 C1-9 C2-6 C2-7 C2-8 C3 C4 C5 C6 C8~~

~~In the districts indicated, the regulations of Section 36-31 to 36-39, inclusive, relating to Required Accessory Off-Street Parking Spaces for Residences When Permitted in Commercial Districts, shall apply as set forth in this Section to #non-profit hospital staff dwellings#. The district regulations of these Sections applicable to #non-profit hospital staff dwellings# are determined in accordance with the following table, and are the same as the regulations applicable to #residences# in the districts indicated in the table.~~

| ~~Districts~~ | ~~Districts Whose Regulations Are Applicable~~ |
|---|---|

| | |
|---|---|
| ~~C3~~ | ~~C4-1~~ |
| ~~C4-1 C8-1~~ | ~~C4-2~~ |
| ~~C1-6 C1-7 C1-8 C1-9 C2-6 C2-7 C2-8 C4-2 C4-3 C4-4 C4-5 C4-6 C4-7 C5 C6 C8-2 C8-3 C8-4~~ | ~~C4-7~~ |

* * *

**36-34**
**Modification of Requirements for Small Zoning Lots**

* * *

**36-341**
**Reduced requirements in C1 or C2 Districts governed by surrounding Residence District bulk regulations**

C1-1 C1-2 C1-3 C1-4 C1-5 C2-1 C2-2 C2-3 C2-4 C2-5

In the districts indicated, for #zoning lots# of 10,000 or 15,000 square feet or less, the number of required #accessory# off-street parking spaces is determined by the #Residence District# within which such #Commercial District# is mapped, in accordance with the following table:

REDUCED REQUIREMENTS FOR
SMALL ZONING LOTS

| ~~#Lot Area#~~ | ~~Parking Spaces Required as a Percent of Total #Dwelling Units#~~ | ~~District within which C1 or C2 District is Mapped~~ |
|---|---|---|
| ~~10,000 square feet or less~~ | ~~50~~ | ~~R6 R7-1* R7B~~ |
| | ~~30~~ | ~~R7-1 R7A R7D R7X~~ |
| ~~10,001 to 15,000 square feet~~ | ~~30~~ | ~~R7-2~~ |

| | | |
|---|---|---|
| | | ~~20~~ | ~~R8** R9 R10~~ |

| #Lot Area# | District within which C1 or C2 District is Mapped | Parking Spaces Required as a Percent of Total #Dwelling Units# |
|---|---|---|
| 10,000 square feet or less | R6 R7-1[1] R7B | 50 |
| | R7-1 R7A R7D R7X | 30 |
| 10,001 to 15,000 square feet | R7-2 | 30 |
| | R8[2] R9 R10 | 20 |

---

[1] In C1 or C2 Districts mapped within R7-1 Districts within #lower density growth management areas# in Community District 10, Borough of the Bronx

[2] In R8B Districts, the parking requirements may not be reduced

**36-342**
**Reduced requirements in other C1 or C2 Districts or in C4, C5 or C6 Districts**

C1-6 C1-7 C1-8 C1-9 C2-6 C2-7 C2-8 C4-2 C4-3 C4-4 C4-5 C4-6 C4-7 C5 C6

In the districts indicated, for #zoning lots# of 10,000 or 15,000 square feet or less, the number of required #accessory# off-street parking spaces is as set forth in the following table:

REDUCED REQUIREMENTS FOR
SMALL ZONING LOTS

| ~~#Lot Area#~~ | ~~Parking Spaces Required as a Percent of Total #Dwelling Units#~~ | ~~District~~ |
|---|---|---|
| ~~10,000 square feet or less~~ | | |
| | ~~50~~ | ~~C4-2 C4-3~~ |

| | | |
|---|---|---|
| ~~10,001 to 15,000 square feet~~ | ~~30~~ | ~~C1-6 C2-6 C4-4 C4-5 C6-1~~ |
| | ~~20~~ | ~~C1-7 C1-8 C1-9 C2-7 C2-8 C4-6 C4-7 C5 C6-2 C6-3 C6-4 C6-5 C6-6 C6-7 C6-8 C6-9~~ |

| #Lot Area# | District | Parking Spaces Required as a Percent of Total #Dwelling Units# |
|---|---|---|
| 10,000 square feet or less | C4-2 C4-3 | 50 |
| 10,001 to 15,000 square feet | C1-6 C2-6 C4-4 C4-5 C6-1 | 30 |
| | C1-7 C1-8 C1-9 C2-7 C2-8 C4-6 C4-7 C5 C6-2 C6-3 C6-4 C6-5 C6-6 C6-7 C6-8 C6-9 | 20 |

* * *

**36-35**
**Modification of Requirements for Income-Restricted Housing Units or Affordable Independent Residences for Seniors ~~Public Housing or Non-profit Residences for the Elderly~~**

C1 C2 C3 C4 C5 C6

In the districts indicated, the number of required #accessory# off-street parking spaces is as set forth in Section 25-25 (Modifications of Requirements for Income-Restricted Housing Units or Affordable Independent Residences for Seniors ~~Public, Publicly-Assisted and Government Assisted Housing or for Non-profit Residences for the Elderly~~) for the applicable #Residence District#, as determined in accordance with Section 35-22 or 35-23. ~~For the purpose of determining the number of required #accessory# off-street parking spaces for such #residences# in C4-4, C4-5 and C6-1 Districts, the regulations of an R7B District shall apply, except that for assisted housing projects in #Quality Housing buildings# in such districts, the number of required #accessory# off-street parking spaces for such #residences# shall be in accordance with an R7A District. For C1-6 and C2-6 Districts, the number of required #accessory# off-street parking spaces for such #residences# shall be in accordance with an R7-2 District.~~

**36-36**
**Waiver of Requirements for Small Number of Spaces**

C1 C2 C4-2 C4-3 C4-4 C4-5 C4-6 C4-7 C5 C6

In the districts indicated, the requirements set forth in Section 36-31 (General Provisions) shall be subject to the waiver provisions of this Section~~, except that the waiver provisions shall not apply to #non-profit residences for the elderly#.~~

*  *  *

**36-362**
**In other C1 or C2 Districts or in C4, C5 or C6 Districts**

C1-6 C1-7 C1-8 C1-9 C2-6 C2-7 C2-8 C4-2 C4-3 C4-4 C4-5 C4-6 C4-7 C5 C6

In the districts indicated, the requirements set forth in Section 36-31 (General Provisions) shall be waived if the required number of #accessory# off-street parking spaces resulting from the application of such requirements is no greater than the maximum number as set forth in the following table:

| ~~Maximum Number of Spaces Waived~~ | ~~Districts~~ |
|---|---|
| ~~5~~ | ~~C4-2 C4-3~~ |
| ~~15~~ | ~~C1-6 C1-7 C1-8 C1-9 C2-6 C2-7 C2-8 C4-4 C4-5 C4-6 C4-7 C5 C6~~ |

| Districts | Maximum Number of Spaces Waived |
|---|---|
| C4-2 C4-3 | 5 |
| C1-6 C1-7 C1-8 C1-9 C2-6 C2-7 C2-8 C4-4 C4-5 C4-6 C4-7 C5 C6 | 15 |

*  *  *

**36-40**
**RESTRICTIONS ON LOCATION AND USE OF ACCESSORY OFF-STREET PARKING SPACES**

*  *  *

**36-42**
**Off-Site Spaces for Residences**

*  *  *

**36-421**
**Maximum distance from zoning lot**

C1 C2 C3 C4 C5 C6

In the districts indicated, all such spaces shall not be further than the distance set forth in the following table from the nearest boundary of the #zoning lot# occupied by the #residences# to which they are #accessory#.

| ~~Maximum Distance from the #Zoning Lot#~~ | ~~District~~ |
|---|---|
| ~~600 feet~~ | ~~C1-1 C1-2 C1-3 C2-1 C2-2 C2-3 C3 C4-1 C4-2 C4-3~~ |
| ~~1,000 feet~~ | ~~C1-4 C1-5 C1-6 C1-7 C1-8 C1-9 C2-4 C2-5 C2-6 C2-7 C2-8 C4-4 C4-5 C4-6 C4-7 C5 C6~~ |

| District | Maximum Distance from the #Zoning Lot# |
|---|---|
| C1-1 C1-2 C1-3 C2-1 C2-2 C2-3 C3 C4-1 C4-2 C4-3 | 600 feet |
| C1-4 C1-5 C1-6 C1-7 C1-8 C1-9 C2-4 C2-5 C2-6 C2-7 C2-8 C4-4 C4-5 C4-6 C4-7 C5 C6 | 1,000 feet |

*  *  *

**OFF-STREET LOADING REGULATIONS**

*  *  *

**36-70**
**BICYCLE PARKING**

*  *  *

**36-71**
**Required Bicycle Parking Spaces**

**36-711**
**Enclosed bicycle parking spaces**

C1 C2 C3 C4 C5 C6 C7 C8

In all districts, as indicated, enclosed #accessory# bicycle parking spaces shall be provided for at least that amount specified for the applicable #use# set forth in the table in this Section.

For the purposes of calculating the number of required bicycle parking spaces, any fraction of a space 50 percent or greater shall be counted as an additional space. For #residences#, the #accessory# bicycle parking requirement shall be calculated separately for separate #buildings# or #building segments#.

Where any #building# or #zoning lot# contains two or more #uses# having different bicycle parking requirements as set forth in the table, the bicycle parking requirements for each type of #use# shall apply to the extent of that #use#.

Where an enclosed #accessory group parking facility# is provided, the required number of bicycle parking spaces for the #use# to which such facility is #accessory# shall be the amount set forth for such #use# in the table, or one for every 10 automobile parking spaces that are enclosed within a #building or other structure# or located on the roof of a #building#, whichever will require a greater number of bicycle parking spaces.

REQUIRED BICYCLE PARKING SPACES
FOR RESIDENTIAL, COMMUNITY FACILITY
OR COMMERCIAL USES

| Type of #Use# | Bicycle Parking Spaces Required in Relation to Specified Unit of Measurement |
|---|---|
| FOR RESIDENTIAL USES | |
| --- | |
| Use Group 1 | None required |
| Use Group 2 | 1 per 2 #dwelling units# |
| #Affordable Independent Residences for Seniors# ~~#Non-profit residences for the elderly# or #dwelling units# for the elderly as specified in Section 36-35(d)~~ | 1 per 10,000 square feet of #floor area# |

* * *

**36-75**
**Floor Area Exemption**

C1 C2 C3 C4 C5 C6 C7 C8

In all districts, as indicated, space provided for enclosed #accessory# bicycle parking spaces pursuant to the standards of this Section shall be excluded from the calculation of #floor area#, provided that:

(a) the space excluded from #floor area# does not exceed an amount equal to 15 square feet multiplied by the number of required spaces or, if spaces are waived pursuant to paragraphs (a), (b), (c) or (d) of Section 36-711 (Enclosed bicycle parking spaces), the number that would have been required but for the waiver or, if spaces are not required because the #building# was constructed prior to April 22, 2009, the number that would be required if such #building# were newly-constructed; and

(b) the #accessory# bicycle parking spaces provided meet the standards for required bicycle parking of Section 36-73 (Restrictions on Operation, Size and Location of Bicycle Parking Spaces).

Notwithstanding the provisions of paragraph (a) of this Section, for the #uses# listed in the table, the amount of space that may be excluded from the calculation of #floor area# shall not exceed an amount equal to 15 square feet multiplied by the number of spaces set forth in the table.

MAXIMUM BICYCLE PARKING SPACES
EXCLUDED FROM FLOOR AREA

| Type of #Use# | Maximum Bicycle Parking Spaces Excluded from #Floor Area# in Relation to Specified Unit of Measurement |
|---|---|
| FOR RESIDENTIAL USES | |
| #Affordable Independent Residences for Seniors# ~~#Non-profit residences for the elderly# or #dwelling units# for the elderly as specified in Section 36-35 (d)~~ | 1 per 2,000 square feet of #floor area# |

* * *

# Article III - Commercial District Regulations

**Chapter 7**
**Special Urban Design Regulations**

**37-00**
**GENERAL PURPOSES**

Special urban design regulations are set forth in this Chapter to improve the quality of the streetscape and to promote a lively and engaging pedestrian experience along commercial streets in various neighborhoods.

The provision of this Chapter shall apply as follows:

(a) Section 37-10 sets forth applicability of Article II, Chapter 6 to #zoning lots# accessed by #private roads# in C1 or C2 Districts mapped within R3, R4 or R5 Districts;

(b) Section 37-20, inclusive, sets forth special regulations for #lower density growth management area# in the Borough of Staten Island;

(c) Section 37-30, inclusive, sets forth special streetscape provisions that apply in conjunction with provisions specified in the supplemental use provisions of Article III, Chapter 2, special provisions for certain areas in Article VI, or in Special Purpose Districts in Articles VIII through XIII;

(d) Section 37-40, inclusive, sets forth provisions for relocating or renovating subway stairs in certain areas;

(e) Section 37-50, inclusive, sets forth requirements for pedestrian circulation spaces that apply in conjunction with provisions specified in certain Special Purpose Districts;

(f) Section 37-60, inclusive, sets forth provisions for #plazas#, #residential plazas# and #urban plazas# created prior to October 17, 2007;

(g) Section 37-70, inclusive, sets forth provisions for #public plazas#;

(h) Section 37-80 sets forth provisions for #arcades#; and

(i) Section 37-90, inclusive, sets forth provisions for certain open parking areas.

* * *

**37-30**
**SPECIAL GROUND FLOOR LEVEL STREETSCAPE PROVISIONS FOR CERTAIN AREAS**
**~~STREETSCAPE~~**

**37-31**
**Applicability**

This Section, inclusive, specifies #ground floor level# requirements that establish consistent minimum depths for certain #uses#, maximum widths for certain #uses#, minimum transparency, and parking wrap and screening requirements that apply as required by specific #ground floor level# requirements set forth for certain #Commercial Districts# in the supplemental #use# provisions of Section 32-40, inclusive; for certain #Manufacturing Districts# in Section 42-485; for #zoning lots# subject to the off-street parking regulations in the #Manhattan Core# in Article I, Chapter3; for #zoning lots# subject to the special provisions for waterfront areas and FRESH food stores in Article VI, Chapters 2 and 3, respectively; and for #zoning lots# subject to the provisions of certain Special Purpose Districts.

However, the ground floor depth requirements for certain #uses# and minimum transparency requirements of Sections 37-32 and 37-34, respectively, shall not apply to:

(a) #zoning lots# in #Commercial Districts# with a #lot width# of less than 20 feet, as measured along the #street line#, provided such #zoning lots# existed on (date of adoption) and on the date of application for a building permit; or

(b) any #community facility building# used exclusively for either a #school#, as listed in Use Group 3, or a house of worship, as listed in Use Group 4.

~~The regulations of Sections 37-30 through 37-37, inclusive, shall apply to any #development# occupied by #predominantly residential use#, constructed after April 21, 1977, located on any #zoning lot# within C1-8, C1-9, C2-7 C2-8, C4-6, C4-7, C5-1, C5-2, C5-4, C6-3, C6-4, C6-5 or C6-8 Districts, or C1 and C2 Districts mapped within R9 or R10 Districts. However, Sections 37-30 through 37-37, inclusive, shall not apply within any Special Purpose District nor shall it apply to any #Quality Housing building#, except as otherwise set forth therein.~~

~~An application to the Department of Buildings for a permit respecting any #development# shall include a plan and an elevation drawn to a scale of at least one-sixteenth inch to a foot of the new #building# and #buildings# on #contiguous lots# or #contiguous blocks# showing #signs#, other than #advertising signs#, #arcades#, #street wall# articulation, curb cuts, #street# trees, sidewalk paving, central refuse storage area and such other necessary information as may be required by the Commissioner of Buildings.~~

**37-311**
**Definitions**

The following definitions shall apply throughout Section 37-30 (SPECIAL GROUND FLOOR LEVEL STREETSCAPE PROVISIONS FOR CERTAIN AREAS), inclusive.

Ground floor level

For the purposes of Section 37-30, inclusive, the “ground floor level” shall refer to a #building’s# lowest #story#.

Primary street frontage

For the purposes of Section 37-30, inclusive, a “primary street frontage” shall be the portion of the #ground floor level street# frontage along:

(a) a #wide street#;

(b) a narrow #street# where a #Commercial District# is mapped along an entire #block# frontage; or

(c) a #narrow street# within 50 feet of a #wide street#.

Secondary street frontage

For the purposes of Section 37-30, inclusive, a “secondary street frontage” shall be a #ground floor level street frontage#, or portion thereof, subject to the provisions of Section 37-30, inclusive, that is not a #primary street frontage#.

**37-32**
**Ground Floor Depth Requirements for Certain Uses**
~~**Definitions**~~

The minimum depth for required ground floor non-#residential uses#, as applicable, shall be as set forth in this Section, except as set forth in Section 37-31 (Applicability).

Required #ground floor level# non-#residential uses# along a #primary street frontage# or a designated retail street specified in a Special Purpose District, as applicable, shall have a minimum depth of 30 feet, as measured perpendicular to the #ground floor level street wall#. However, such minimum depth requirement may be reduced where necessary to accommodate vertical circulation cores or structural columns associated with upper #stories# of the #building#.

~~Contiguous block~~

~~For the purposes of Sections 37-30 through 37-37, inclusive, a "contiguous block" is a #block# containing one or more #zoning lots# separated by a #narrow street# from the #block# containing the #development#.~~

~~Contiguous lot~~

~~For the purposes of Sections 37-30 through 37-37, inclusive, a "contiguous lot" is a #zoning lot# which shares a~~

~~common #side lot line# with the #zoning lot# of the #development#.~~

~~Development~~

~~For the purposes of Sections 37-30 through 37-37, inclusive, in addition to the definition of "development" pursuant to Section 12-10 (DEFINITIONS), "development" shall also include an #enlargement# involving an increase in #lot coverage#.~~

~~Predominantly residential use~~

~~For the purposes of Sections 37-30 through 37-37, inclusive, a "predominantly residential use" means a #building# having a #residential floor area# in excess of 50 percent of the total #building floor area#.~~

**37-33**
**Maximum Width of Certain Uses**
**~~Applicability of Article II~~**

The widths of #residential# lobbies, entrances and exits to #accessory# off-street parking facilities, and entryways to subway stations shall be as set forth in this Section.

(a) Ground floor lobbies

(1) Type 1

Where Type 1 lobby provisions apply, lobbies accessing #uses# not permitted on the #ground floor level# shall be permitted, provided that the width of such lobbies, in total, does not exceed 25 percent of the #street wall# width of the #building# or more than 20 linear feet of #street wall# frontage on a #wide street# or 30 linear feet on a #narrow street#, whichever is less. However, the width of such lobbies need not be less than 10 feet.

(2) Type 2

Where Type 2 lobby provisions apply, lobbies accessing #uses# not permitted on the #ground floor level# shall be permitted, provided that the width of such lobbies, in total, does not exceed 25 percent of the #street wall# width of the #building# or more than 40 linear feet of #street wall#, whichever is less. However, the width of such lobbies need not be less than 20 feet.

(b) Entrances and exits to #accessory# parking facilities

Entrances and exists to #accessory# off-street parking facilities, where permitted on the #ground floor level#, or portion thereof, shall not exceed a #street wall# width equal to the sum of five feet plus the maximum curb cut width for the applicable district. Where no specified maximum curb cut width is set

forth for the district, the curb cuts regulations for #buildings# containing #residences# in R6 through R8 Districts with a letter suffix in paragraph (e) of Section 25-631 shall be applied.

(c) Entryways to subway stations

Entrances to subway stations may be provided on the #ground floor level# of a #building# without restriction in #street wall# width.

~~In C1-8, C1-9, C2-7, C2-8, C4-6, C4-7, C5-1, C5-2, C5-4, C6-3, C6-4, C6-5 and C6-8 Districts, or C1 or C2 Districts mapped within R9 or R10 Districts, the regulations of Article II, Chapter 6 (Special Urban Design Guidelines - Streetscape), shall apply to any #development# occupied by #predominantly residential use#, except as modified by the provisions of Sections 37-34 to 37-37, inclusive, relating to Modifications to the Applicability of Article II, Chapter 6. The purpose of these modifications is to make the regulations of Article II, Chapter 6, applicable to #Commercial Districts#.~~

**37-34**
**Minimum Transparency Requirements**
**~~Modifications to Applicability of Article II, Chapter 6~~**

The #ground floor level street wall# along a #primary street frontage# or a designated retail street set forth in a Special Purpose District, as applicable, shall be glazed with transparent materials which may include #show windows#, transom windows or glazed portions of doors, except as set forth in Section 37-31 (Applicability).

Such transparent materials shall occupy at least 50 percent of the surface area of such #ground floor level street wall# between a height of two feet and 12 feet, or the height of the ground floor ceiling, whichever is higher, as measured from the adjoining sidewalk. Transparent materials provided to satisfy such 50 percent requirement shall not begin higher than 2 feet, 6 inches, above the level of the adjoining sidewalk, with the exception of transom windows, or portions of windows separated by mullions or other structural dividers; and shall have a minimum width of two feet. The maximum width of a portion of the #ground floor level street wall# without transparency shall not exceed ten feet.

However, such transparency requirements shall not apply to portions of the #ground floor level# occupied by: entrances or exits to #accessory# off-street parking facilities and #public parking garages#, where permitted; entryways to required loading berths, where permitted; entryways to subway stations, as applicable; or doors accessing emergency egress stairwells and passageways.

~~In C1-8, C1-9, C2-7, C2-8, C4-6, C5-1, C5-2, C5-4, C6-3, C6-4, C6-5 and C6-8 Districts, or C1 or C2 Districts mapped within R9 or R10 Districts, the regulations of Article II, Chapter 6, applicable to #developments# occupied by a #predominantly residential use# are modified by the provisions of Sections 37-35 (Retail Continuity), 37-36 (Sign Regulations) and 37-37 (Street Wall Articulation).~~

**37-35**

**Parking Wrap and Screening Requirements**

~~**Retail Continuity**~~

All #accessory# off-street parking spaces on the #ground floor level# of a #buildings# shall be wrapped by #floor area# in accordance with paragraph (a) or, where applicable, screened in accordance with applicable provisions of paragraph (b) of this Section.

(a) Along primary street frontages

For #ground floor levels#, or portions thereof, fronting along a #primary street frontage# or a designated retail street set forth in a Special Purpose District, as applicable, any portion of an #accessory# off-street parking facility that is located above #curb level#, except for permitted entrances and exits, shall be located behind permitted #commercial#, #community facility# or #residential floor area# so that no portion of such facility is visible from adjacent public sidewalks or publicly accessible areas. Such #floor area# shall have a minimum dimension of 30 feet, as measured perpendicular to the #street wall# of the #building#.

(b) Along secondary street frontages

For #ground floor levels#, or portions thereof, fronting along a #secondary street frontage# or 50 feet beyond a designated retail street set forth in a Special Purpose District, as applicable, off-street parking facilities, or portions thereof, may either be wrapped by #floor area# in accordance with paragraph (a) of this Section, or be designed in a manner that:

(1) any non-horizontal parking deck structures are not visible from the exterior of the #building# in elevation view;

(2) opaque materials are located on the exterior #building# wall between the bottom of the floor of each parking deck and no less than three feet above such deck; and

(3) a total of at least 50 percent of such exterior #building# wall, or portion thereof, with adjacent parking spaces consists of opaque materials which may include permitted #signs#, graphic or sculptural art, or living plant material.

~~For #buildings# with front #building# walls that are at least 50 feet in width and front upon a #wide street#, a minimum of 50 percent of the width of such front #building# wall shall be occupied at the ground floor level by #commercial uses#, as permitted by district regulations.~~

~~In C1-8, C1-9, C2-7, C2-8, C4-6 Districts, and C1 or C2 Districts mapped within R9 or R10 Districts, #uses# which occupy such 50 percent of the front #building# wall shall be limited to those listed in Use Groups 6A, 6C and 6F, excluding banks and loan offices, except that in C4-6 Districts only, such #uses# may additionally include those listed in Use Groups 8A, 8B and 10A. All #uses# permitted by the underlying district regulations are~~

~~permitted in the remaining 50 percent of the front #building# wall.~~

~~Such requirement of #commercial uses# for a minimum of 50 percent of the front #building# wall may be waived, or additional #uses# permitted, upon certification by the City Planning Commission to the Commissioner of Buildings that an adequate supply of such #uses# already exists at the ground floor level in the surrounding area.~~

~~The Commission may require that an application for such certification of additional #uses# for a completed #building#, where #floor area# has been designated for occupancy for such #commercial uses#, establish that a good faith effort has been made to secure tenancy by such #uses#.~~

**~~37-36~~**
**~~Sign Regulations~~**

~~In addition to the applicable district regulations in C1-8, C1-9, C2-7, C2-8 and C4-6 Districts, and C1 or C2 Districts mapped within R9 or R10 Districts, all #signs#, other than #advertising signs# and window #signs#, shall be located in a horizontal band not higher than three feet, the base of which is located not higher than 17 feet above #curb level#. Where there is a grade change of at least 1.5 feet in 100 along the portion of the #street# upon which the #development# fronts, such signage band may be staggered along such #street#.~~

~~When a #building# on a #contiguous lot# or #contiguous block# contains #accessory# business #signs# within a coordinated horizontal band along its #street# frontage, the signage strip along the #development# shall be located at the same elevation as the adjacent band, but in no event higher than 17 feet above #curb level#. Where coordinated horizontal bands exist on two #contiguous lots# or #contiguous blocks# on both sides of the #development#, the signage strip shall be located at the same elevation as one adjacent band, or between the elevations of the two. For the purpose of this Section, the elevation is measured from the #curb level# to the base of the signage strip.~~

~~The City Planning Commission may, by certification to the Commissioner of Buildings, allow modifications of the requirements of this Section. Such modifications will be permitted when the Commission finds that such modifications will enhance the design quality of the #street wall#.~~

**~~37-37~~**
**~~Street Wall Articulation~~**

~~When any #building# wall which is five feet or more in height adjoins a sidewalk, a #public plaza# or an #arcade#, at least 50 percent of the total surface area of such wall between #curb level# and 12 feet above #curb level# or to the ceiling of the ground floor, whichever is higher, or to the full height of the wall if such wall is less than 12 feet in height, shall be transparent. The lowest point at any point of any transparency that is provided to satisfy the requirements of this Section shall not be higher than four feet above the #curb level#.~~

~~Door or window openings within such walls shall be considered as transparent. Such openings shall have a minimum width of two feet.~~

~~In addition, any portion of such #building# wall, 50 feet or more in width, which contains no transparent element between #curb level# and 12 feet above #curb level# or the ceiling of the ground floor, whichever is higher, or to its full height if such wall is less than 12 feet in height, shall be covered with ivy or similar planting or contain artwork or be treated so as to provide visual relief. Plants shall be planted in soil having a depth of not less than 2 feet, 6 inches, and a minimum width of 24 inches. If artwork is being used, approval by the New York City Design Commission shall be obtained prior to the certificate of occupancy being issued for the #development#.~~

**~~37-38~~**
**~~Sidewalk Widening in Certain Districts~~**

~~C6-3D~~

~~In the district indicated, and in C1 or C2 Districts mapped within an R9D District, for #developments# or #enlargements# on #zoning lots# fronting upon #wide streets#, or fronting upon #narrow streets# that include an elevated rail line, sidewalks, with a minimum depth of 20 feet measured perpendicular to the curb of the #street#, shall be provided along such entire #street# frontages of the #zoning lot#. In locations where the width of the sidewalk within the #street# is less than 20 feet, a sidewalk widening shall be provided on the #zoning lot# so that the combined width of the sidewalk within the #street# and the sidewalk widening equals 20 feet. However, existing #buildings# to remain on the #zoning lot# need not be removed in order to comply with this requirement. All sidewalk widenings shall be improved to Department of Transportation standards for sidewalks, shall be at the same level as the adjoining public sidewalks, and shall be accessible to the public at all times. In addition, the provisions of paragraphs (f)(2) through (f)(5) of Section 37-53 (Design Standards for Pedestrian Circulation Spaces) shall apply.~~

* * *

**37-40**
**OFF-STREET RELOCATION OR RENOVATION OF A SUBWAY STAIR**

Where a #development# or an #enlargement# is constructed on a #zoning lot# of 5,000 square feet or more of #lot area# that fronts on a portion of a sidewalk containing a stairway entrance or entrances into a subway station located within the #Special Midtown District# as listed in Section 81-46, the #Special Lower Manhattan District# as listed in Section 91-43, the #Special Downtown Brooklyn District# as listed in Section 101-43, the #Special Long Island City Mixed Use District# as described in Section 117-44, the #Special Union Square District# as listed in Section ~~118-60~~ 118-50 and those stations listed in the following table, the existing entrance or entrances shall be relocated from the #street# onto the #zoning lot#. The new entrance or entrances* shall be provided in accordance with the provisions of this Section.

* * *

# Article IV - Manufacturing District Regulations

**Chapter 2**
**Use Regulations**

* * *

**42-40**
**SUPPLEMENTARY USE REGULATIONS AND SPECIAL PROVISIONS APPLYING ALONG DISTRICT BOUNDARIES**

* * *

**42-48**
**Supplemental Use Regulations in M1-6D Districts**

All permitted #uses# in M1-6D Districts, as set forth in Section 42-10 (USES PERMITTED AS-OF-RIGHT), shall comply with the provisions set forth in this Section, inclusive.

* * *

**42-485**
**Streetscape provisions**

On #narrow streets#, for #zoning lots# with #street# frontage of 50 feet or more, ground floor #uses# limited to Use Groups 6A, 6C, 7B, 8A, 8B, 9A, 10A, 12A and 12B shall ~~have a depth of at least 30 feet from the #street wall# and shall~~ extend along a minimum of 50 percent of the width of the #street# frontage of the #zoning lot#. Such #uses# shall extend to a depth in accordance with the provisions of Section 37-32 (Ground Floor Depth Requirements for Certain Uses). The remainder of the #street# frontage of the #zoning lot# may be occupied by any permitted #uses#, provided that lobbies shall comply with the provisions for Type 2 lobbies set forth in Section 37-33 (Maximum Width of Certain Uses). ~~lobbies, or entrances to parking spaces, except that lobbies shall be limited to a total width of 40 feet. No minimum 30 foot depth requirement shall apply where a reduction in such depth is necessary in order to accommodate a #residential# lobby or vertical circulation core.~~

Enclosed parking spaces, or parking spaces covered by a #building#, including such spaces #accessory# to #residences#, shall be permitted to occupy the ground floor, provided ~~they are located beyond 30 feet of the #street wall#~~ that such spaces are wrapped by #floor area# or screened in accordance with the provisions of Section 37-35, as applicable.

For any #development# or #enlargement# that includes a ground floor #street wall#, each ground floor #street wall# occupied by #uses# listed in Use Groups 1 through 15, not including #dwelling units#, shall be glazed in accordance with the provisions of Section 37-34 (Minimum Transparency). ~~with transparent materials which may include #show windows#, transom windows or glazed portions of doors. Such transparency shall occupy at least 50 percent of the surface area of that portion of the ground floor #street wall# located between a height of two feet~~

~~and twelve feet, or the height of the ground floor ceiling, whichever is higher, above the level of the adjoining sidewalk. The lowest point of any such required transparency shall not be higher than four feet above the level of the adjoining sidewalk, with the exception of transom windows, and the minimum width of any such required transparency shall be two feet. In addition, the maximum width of a portion of the ground floor level #street wall# without transparency shall not exceed ten feet. However, the transparency requirements of this Section shall not apply to that portion of the ground floor level #street wall# occupied by an entrance to a parking facility.~~

*  *  *

# Article IV - Manufacturing District Regulations

**Chapter 3**
**Bulk Regulations**

*  *  *

**43-60**
**SUPPLEMENTARY REGULATIONS**

*  *  *

**43-62**
**Bulk Regulations in M1-6D Districts**

**43-621**
**Floor area regulations in M1-6D Districts**

(a) The maximum #floor area ratio# for #zoning lots# shall be 10.0, and no #floor area# bonuses shall apply, except as modified for #Inclusionary Housing designated areas, as set forth in paragraph (b) of this Section.

(b) In #Inclusionary Housing designated areas#

For M1-6D Districts mapped within an #Inclusionary Housing designated area#, the provisions of Section 23-90 (INCLUSIONARY HOUSING) applicable to R10 Districts without a letter suffix shall apply, as modified in this Section:

(1) for #zoning lots# that do not contain #residences#, the maximum #floor area ratio# shall be 10.0; and

(2) the maximum base #floor area ratio# for #zoning lots# containing #residences# shall be 9.0 plus an amount equal to 0.25 times the non-#residential floor area ratio# provided on the #zoning lot#, up to 10.0. Such #floor area ratio# may be increased to a maximum of 12.0 only through the provision of #affordable housing#, pursuant to Section 23-90, inclusive.

*  *  *

**43-623**
**Density in M1-6D Districts**

The provisions of 35-40 (APPLICABILITY OF DENSITY REGULATIONS TO MIXED BUILDINGS) shall apply. The applicable factor shall be ~~790~~ 680.

**43-624**
**Height and setback in M1-6D Districts**

In M1-6D Districts, the height and setback provisions of this Section shall apply to all #buildings#.

(a) Rooftop regulations

(1) Permitted obstructions

The provisions of Section 33-42 shall apply to all #buildings#, except that elevator or stair bulkheads, roof water tanks, cooling towers or other mechanical equipment (including enclosures) may penetrate a maximum height limit or #sky exposure plane#, provided that either the product, in square feet, of the #aggregate width of street walls# of such obstructions facing each #street# frontage, times their average height, in feet, shall not exceed a figure equal to eight times the width, in feet, of the #street wall# of the #building# facing such frontage; or provided that the #lot coverage# of all such obstructions does not exceed 20 percent of the #lot coverage# of the #building#, and the height of all such obstructions does not exceed 40 feet.

In addition, ~~on #narrow streets#,~~ a maximum base height or #sky exposure plane# may be penetrated, as follows:

(i) Structural columns

Structural columns may penetrate a maximum height limit or #sky exposure plane#, provided that such columns are one story or less in height, have a #street wall# no greater than 30 inches in width, and are spaced not less than 15 feet on center.

(ii) Dormers

~~(a)~~ On any #street# frontage, dormers may be provided in accordance with the provisions of paragraph (c) of Section 23-621 (Permitted obstructions in certain districts). ~~the aggregate width of all dormers at the maximum base height shall not exceed 60 percent of the length of the #street wall# of the highest #story# entirely below the maximum base height. For each foot of height above the maximum base height, the aggregate width of all such dormers shall be decreased by one percent of the #street wall# width of the highest #story# entirely below the maximum base height.~~

~~(b) The aggregate width of dormers at the maximum base height facing the #rear~~

~~yard line# or #rear yard equivalent# shall not exceed 60 percent of the length of the wall of the #building# facing a #rear yard line# at the highest #story# entirely below the maximum base height. For each foot of height above the maximum base height, the aggregate width of all such rear dormers shall be decreased by one percent of the width of the #building# wall facing the #rear lot line#, at the level of the highest #story# entirely below the maximum base height.~~

~~Where two rear setbacks are provided as set forth in paragraph (b)(3)(ii) of this Section, the aggregate width of rear dormers, measured separately within each setback, shall not exceed 60 percent of the length of #building# wall facing a #rear yard line# at the highest #story# entirely below each rear setback. For each foot of height that a dormer is above the level of a setback, the aggregate width of dormers within such setback shall be decreased by one percent of the width of the highest #story# entirely below such setback.~~

~~In the case of a #through lot# on which a #rear yard equivalent# is provided, the requirements of this Section shall apply as if such #rear yard equivalent# were two adjoining #rear yards#.~~

(2) Screening requirements for mechanical equipment

For all #developments# and #enlargements#, and #conversions# of #non-residential buildings# to #residences#, all mechanical equipment located on any roof of a #building or other structure# shall be fully screened on all sides. However, no such screening requirements shall apply to water tanks.

(b) Height and setback

(1) #Street wall# location

The #street wall# shall be located on the #street line# and extend along the entire #street# frontage of the #zoning lot# up to at least the minimum base height specified in paragraph (b)(2) of this Section. On the ground floor, recesses shall be permitted where required to provide access to the #building#, provided such recesses do not exceed three feet in depth as measured from the #street line#.

Above the level of the second #story#, up to 30 percent of the #aggregate width of street walls# may be recessed beyond the #street line#. However, no recesses shall be permitted within 20 feet of an adjacent #building# and within 30 feet of the intersection of two #street lines#.

(2) Base height

(i) <u>Along #wide streets#</u>

On #wide streets#, and on #narrow streets# within 50 feet of their intersection with a #wide street#, the #street wall# of a #building# shall rise without setback to a minimum base height of 125 feet and, and may rise to a maximum base height of 155 ~~150~~ feet.

(ii) Along #narrow street#

On #narrow streets#, beyond 50 feet of their intersection with a #wide street#, the #street wall# of a #building# shall rise without setback to a minimum base height of 85 feet, and may rise to and a maximum base height of 135 ~~125~~ feet. However, for #buildings# providing #affordable housing# pursuant to the provisions of Section 23-90, inclusive, the maximum base height may be increased to a height of 155 feet.

As an alternative, the minimum and maximum base heights applicable to a #wide street# may apply along a #narrow street# to a distance of 100 feet from a #wide street#.

(3) Required setbacks and maximum #building# heights

(i) Along #wide streets#

~~The provisions of this paragraph, (b)(3)(i), shall apply to~~ For #buildings#, or portions thereof, located on #wide streets# and on #narrow streets# within 100 feet of a #wide street#~~.~~, ~~T~~the portion of such #building# above a height of 155 ~~150~~ feet shall be set back from the #street wall# of the #building# at least 10 feet along a #wide street# and at least 15 feet along a #narrow street#, except such dimensions may include the depth of any permitted recesses in the #street wall#. The maximum height of such #buildings# shall be 290 feet. In addition, the gross area of each of ~~either~~ the highest two ~~or three~~ #stories# of such #building# shall not exceed 80 percent of the gross area of the #story# directly below such highest two ~~or three~~ #stories#.

(ii) Along #narrow streets#

~~The provisions of this paragraph, (b)(3)(ii), shall apply to~~ For all #buildings#, or portions thereof, located on #narrow streets# beyond 100 feet of a #wide street#, ~~. N~~no portion of such #building or other structure# shall penetrate a #sky exposure plane# which begins at a height of 125 feet above the #narrow street line# and rises over the #zoning lot# with a slope of four feet of vertical distance for every foot of horizontal distance. ~~The maximum height of such #buildings#, shall be 210 feet.~~

However, any portion of such #building or other structure# that is located beyond 15 feet of the #street line# may penetrate such #sky exposure plane#, provided such portion does

not exceed a height of 210 feet, or, for #buildings# providing #affordable housing# pursuant to the provisions of Section 23-90, inclusive, or #affordable independent residences for seniors#, where at least 20 percent of the #floor area# of the #zoning lot# is allocated to such #use#, the maximum #building# height and maximum number of #stories# set forth in paragraph (a) of Section 23-664 for an R10 Districts. Separate maximum #building# heights are set forth within such Section for #developments# or #enlargements# with #qualifying ground floors# and for those with #non-qualifying ground floors#, as defined in Section 23-662. In addition, the gross area of each of the top two #stories# of a #building# may not be greater than 80 percent of the gross area of the #story# directly below such top two #stories#.

~~In addition, for #buildings# containing #residences#, no portion of such #building# exceeding a height of 125 feet shall be nearer to a #rear yard line# than ten feet. Alternatively, a pair of setbacks may be provided in accordance with the following:~~

~~(a) a setback of five feet from the #rear yard line# shall be provided between a height of 85 feet and 125 feet; and~~

~~(b) a setback of ten feet from the #rear yard line# shall be provided between a height of 125 and 165 feet.~~

~~However the heights of such setbacks shall be vertically equidistant from a height of 125 feet.~~

~~In the case of a #through lot# on which a #rear yard equivalent# is provided, the requirements of this Section shall apply as if such #rear yard equivalent# were two adjoining #rear yards#.~~

(4) Maximum length of #building# wall

The maximum length of any #story# located entirely above a height of 150 feet shall not exceed 150 feet. Such length shall be measured in plan view by inscribing within a rectangle the outermost walls at the level of each #story# entirely above a level of 150 feet.

**43-625**
**Yard regulations in M1-6D Districts**

In M1-6D Districts, the provisions of Section 43-20 (YARD REGULATIONS) shall apply, except that #residential# portions of a #building# shall provide a #rear yard# with a minimum depth of 30 feet at any level not higher than the floor level of the lowest #story# containing #dwelling units# with a #window# opening upon such #rear yard#. On any #through lot# that is 110 feet or more in depth from #street# to #street#, a #rear yard equivalent# shall be provided within 15 feet of the centerline of the #through lot# or #through lot# portion. In the

case of a #through lot# on which a #rear yard equivalent# is provided, the requirements of this Section shall apply as if such #rear yard equivalent# were two adjoining #rear yards#. For shallow #zoning lots#, a reduction in the required #rear yard# or #rear yard equivalent# may be applied pursuant to the provisions applicable for an R10 District set forth in Section 23-51 (Special Provisions for Shallow Interior Lots) or 23-52 (Special Provisions for Shallow Through Lots), as applicable.

**43-626**
**Courts in M1-6D Districts**

#Residential# portions of #buildings# shall be subject to the court provisions applicable in R10 Districts as set forth in Section 23-80 (COURT REGULATIONS, MINIMUM DISTANCE BETWEEN WINDOWS AND WALLS OR LOT LINES AND OPEN AREA REQUIREMENTS), inclusive.

* * *

# Article VI - Special Regulations Applicable to Certain Areas

**Chapter 2**
**Special Regulations Applying in the Waterfront Area**

**62-00**
**GENERAL PURPOSES**

The provisions of this Chapter establish special regulations which are designed to guide development along the City's waterfront and in so doing to promote and protect public health, safety and general welfare. These general goals include, among others, the following purposes:

(a) to maintain and reestablish physical and visual public access to and along the waterfront;

(b) to promote a greater mix of uses in waterfront developments in order to attract the public and enliven the waterfront;

(c) to encourage water dependent uses along the City's waterfront;

(d) to create a desirable relationship between waterfront development and the water's edge, public access areas and adjoining upland communities;

(e) to preserve historic resources along the City's waterfront; and

(f) to protect natural resources in environmentally sensitive areas along the shore.

**62-10**
**GENERAL PROVISIONS**

* * *

**62-13**
**Applicability of District Regulations**

* * *

**62-133**
**Applicability of the Quality Housing Program**

* * *

#Developments# that provide a #shore public walkway#, in accordance with the requirements of Section 62-60

(DESIGN REQUIREMENTS FOR WATERFRONT PUBLIC ACCESS AREAS), shall be deemed to have met the requirements for recreation space specified in Section 28-20 ~~28-30~~ (RECREATION SPACE AND PLANTING AREAS). Also, for the purposes of Section 28-23 ~~28-33~~ (Planting Areas), the boundary of an #upland connection# located within a private drive shall be considered a #street line#.

* * *

**62-135**
**Applicability of bulk regulations to long-term care facilities**

For #buildings# containing #long-term care facilities#, the applicable provisions of 24-013, 33-012 and 35-012 shall apply, except as modified by the #bulk# regulations of Section 62-30 (SPECIAL BULK REGULATIONS), inclusive. For the purposes of applying #floor area ratio# and #lot coverage#, the regulations applicable to #affordable independent residences for seniors# set forth in Section 62-323 (Affordable independent residences for seniors) shall apply.

* * *

**62-30**
**SPECIAL BULK REGULATIONS**

* * *

**62-32**
**Maximum Floor Area Ratio and Lot Coverage on Waterfront Blocks**

**62-321**
**Residential uses in R3, R4 and R5 Districts**

The maximum #floor area ratio# and #lot coverage# for #residential buildings# or #residential# portions of #buildings# in R3, R4 and R5 Districts shall be in accordance with the applicable district regulations, except as provided in Section 62-323 (~~Non-profit residences for the elderly~~ Affordable independent residences for seniors ~~in R3, R4, R5, R6 and R7 Districts~~).

**62-322**
**Residential uses in R1, R2, R6, R7, R8, R9 and R10 Districts**

For #residential buildings# or #residential# portions of #buildings# in R1, R2, R6, R7, R8, R9 and R10 Districts, the applicable regulations of Section 23-14 (~~Minimum Required Open Space, Open Space Ratio, Maximum Lot~~

~~Coverage and Maximum Floor Area Ratio~~ Open Space and Floor Area Regulations in R1 through R5 Districts) ~~through~~ or Section 23-15 (~~Maximum Floor Area Ratio in R10 Districts~~ Open Space and Floor Area Regulations in R6 through R10 Districts), inclusive, shall not apply. In lieu thereof, the maximum #floor area ratio# and #lot coverage# on a #zoning lot# shall be as specified in the following table, except as provided for in Sections 23-154 ~~23-952~~ (~~Floor area compensation in Inclusionary Housing designated areas~~ Inclusionary Housing ), 62-323 (~~Non-profit residences for the elderly~~ Affordable independent residences for seniors ~~in R3, R4, R5, R6 and R7 Districts~~) and 62-35 (Special Bulk Regulations in Certain Areas Within Community District 1, Brooklyn):

* * *

---

[1] In #Inclusionary Housing designated areas#, the #floor area ratio# has been modified, pursuant to Section ~~23-952~~ 23-154 (~~Floor area compensation in Inclusionary Housing designated areas~~ Inclusionary Housing) or Section 62-35 (Special Bulk Regulations in Certain Areas within Community District 1, Brooklyn), inclusive

[2] In R10 Districts, the #floor area ratio# may be increased to a maximum of 12.0, pursuant to Section ~~23-951~~ 23-154 (~~Floor area compensation in R10 Districts other than Inclusionary Housing designated areas)~~

**62-323**
**~~Non-profit residences for the elderly~~ Affordable independent residences for seniors ~~in R3, R4, R5, R6 and R7 Districts~~**

In the districts indicated in the following table, the maximum #floor area ratio# for #affordable independent residences for seniors# shall be as set forth in Sections 23-144 and 23-155, as applicable, and the maximum #lot coverage# ~~for #non-profit residences for the elderly# on a #zoning lot#~~ shall be as specified in the following Table:

MAXIMUM ~~FLOOR AREA RATIO AND MAXIMUM~~ LOT COVERAGE
FOR ~~NON-PROFIT RESIDENCES FOR THE ELDERLY~~
AFFORDABLE INDEPENDENT RESIDENCES FOR SENIORS
~~IN R3, R4, R5, R6 AND R7 DISTRICTS~~

| District | ~~Maximum #Floor Area Ratio#~~ | Maximum #Lot Coverage# (in percent) |
|---|---|---|
| R3 | ~~.95~~ | 55 |
| R4 | ~~1.29~~ | 55 |

| | | |
|---|---|---|
| R5 | ~~1.95~~ | 60 |
| R5D R6B | ~~2.00~~ | 60 |
| R6 R6A R7B | ~~3.90~~ | 65 |
| R7 R7A R7D R7X | ~~5.01~~ | 70 |
| R8 R9 R10 | | 70 |

Where different maximum percentages of #lot coverage# apply to #residential# and #community facility uses#, the higher #lot coverage# shall be applied to any level containing both such #uses#. Furthermore, the maximum percent of #lot coverage# for #community facility uses# located below the level of #residential uses# need not be lower than the maximum percent of #lot coverage# permitted for such #residential uses#.

* * *

**62-34**
**Height and Setback Regulations On Waterfront Blocks**

* * *

**62-341**
**Developments on land and platforms**

All #developments# on portions of a #zoning lot# landward of the #shoreline# or on #platforms# shall be subject to the height and setback provisions of this Section. However, when the seaward view from all points along the #shoreline# of a #zoning lot# is entirely obstructed by existing elevated roads, bridges or similar structures which are less than 50 feet above mean high water and within 200 feet of the #shoreline#, #developments# shall be exempt from the requirements of this Section. Height and setback regulations for #developments# on #piers# and #floating structures# are set forth in Sections 62-342 and 62-343.

(a) For the purposes of applying the height and setback regulations of this Section, the following provisions shall apply:

* * *

(3) Measurement of height

The height of all #buildings or other structures# on #waterfront blocks# shall be measured from

the #base plane#, except where modified by the provisions of Article VI, Chapter 4. For #buildings# with pitched roofs, maximum #building# height shall be measured to the midpoint of such pitched roof, except for #buildings# subject to Section 23-631 (~~Height and setback Requirements in R1, R2, R3, R4 or through R5 Districts~~ General provisions).

(4) Permitted obstructions

The obstructions permitted pursuant to Sections 23-62, 24-51, 33-42 or 43-42 and, where applicable, Sections 64-331, 64-332 or 64-432 shall apply. In addition, the following regulations regarding permitted obstructions shall apply:

(i) Within an #initial setback distance#, a dormer may exceed a maximum base height specified in Table A of this Section or penetrate a required setback area above a maximum base height specified in paragraph (d) ~~Table C~~ of this Section, provided that such dormer complies with the provisions of paragraph (c)(1) of Section 23-621. ~~on any #street# frontage the aggregate width of all dormers at the maximum base height does not exceed 60 percent of the width of the #street wall# of the highest #story# entirely below the maximum base height. At any level above the maximum base height, the width of a #street wall# of a dormer shall be decreased by one percent for every foot that such level of dormer exceeds the maximum base height. (See Illustration of Dormer)~~

* * *

(d) Medium and high density contextual districts

R6A R6B R7A R7B R7D R7X R8A R8B R8X R9A R9X R10A

C1-6A C1-7A C1-8A C1-8X C1-9A C2-6A C2-7A C2-7X C2-8A C4-2A C4-3A C4-4A C4-4L C4-5A C4-5D C4-5X C4-6A C4-7A C5-1A C5-2A C6-2A C6-3A C6-4A

In the districts indicated, and in C1 and C2 Districts mapped within such #Residence Districts#, the height and setback regulations ~~of Sections 23-60, 24-50 and 35-24 shall not apply. In lieu thereof, the height and setback regulations set forth in this Section shall apply:~~ of Section 23-662 shall apply. For #Commercial Districts#, the applicable #Residence District# within which such #Commercial District# is mapped, or the applicable residential equivalent set forth in the tables in Section 35-23 (Residential Bulk Regulations in Other C1 or C2 Districts or in C3, C4, C5 or C6 Districts) shall be used in applying such provisions. In addition, in all applicable districts, for #developments# or #enlargements# providing #affordable housing# pursuant to the Inclusionary Housing Program, as set forth in Section 23-90, inclusive, or for #developments# or #enlargements# where at least 20 percent of the #floor area# of the #zoning lot# contains #affordable independent residences for seniors#, the height and setback provisions of Section 23-664 shall apply. Separate maximum #building# heights are set forth within the Tables of Sections 23-662 and 23-664 for #developments# or #enlargements# with #qualifying ground floors# and for those with #non-qualifying ground floors#, as defined in Section 23-662.

~~(1) Maximum #building# height~~

~~No #building or other structure# shall exceed the maximum #building# heights specified in Table C of this Section.~~

~~A setback is required for all portions of #buildings or other structures# that exceed the specified maximum base height for the applicable district, and shall be provided in accordance with paragraph (d)(2) of this Section.~~

~~(2) Setback provisions~~

~~Except for dormers permitted in accordance with paragraph (a)(4)(i) of this Section, setbacks are required for all portions of #buildings or other structures# that exceed the maximum base heights specified in Table C of this Section. Such setbacks shall be provided in accordance with the following provisions:~~

~~(i) #Building# walls facing a #wide street# shall provide a setback at least ten feet deep from such wall of the #building# at a height not lower than the minimum base height specified in Table C of this Section. #Building# walls facing a #narrow street# shall provide a setback at least 15 feet deep from such wall of the #building# at a height not lower than the minimum base height specified in Table C.~~

~~(ii) These setback provisions are optional for any #building# wall that is either located beyond 50 feet of a #street line# or oriented so that lines drawn perpendicular to it would intersect a #street line# at an angle of 65 degrees or less. In the case of an irregular #street line#, the line connecting the most extreme points of intersection shall be deemed to be the #street line#.~~

~~TABLE C~~

~~HEIGHT AND SETBACK FOR ALL BUILDINGS AND OTHER STRUCTURES IN MEDIUM AND HIGH DENSITY CONTEXTUAL DISTRICTS~~

| ~~District~~ | ~~Minimum Base Height~~ | ~~Maximum Base Height~~ | ~~Maximum Height of #Buildings or other Structures#~~ |
|---|---|---|---|
| ~~R6B~~<br>~~C1 or C2 mapped within R6B~~ | ~~30~~ | ~~40~~ | ~~50~~ |
| ~~R6A~~<br>~~C1 or C2 mapped within R6A~~<br>~~C4-2A C4-3A~~ | ~~40~~ | ~~60~~ | ~~70~~ |
| ~~R7B~~<br>~~C1 or C2 mapped within R7B~~ | ~~40~~ | ~~60~~ | ~~75~~ |
| ~~R7A~~<br>~~C1 or C2 mapped within R7A~~<br>~~C1-6A C2-6A C4-4A C4-4L~~<br>~~C4-5A~~ | ~~40~~ | ~~65~~ | ~~80~~ |
| ~~R7D~~<br>~~C1 or C2 mapped within R7D~~<br>~~C4-5D~~ | ~~60~~ | ~~85~~ | ~~100~~ |
| ~~R7X~~<br>~~C1 or C2 mapped within R7X~~<br>~~C4-5X~~ | ~~60~~ | ~~85~~ | ~~125~~ |
| ~~R8B~~<br>~~C1 or C2 mapped within R8B~~ | ~~55~~ | ~~60~~ | ~~75~~ |
| ~~R8A~~<br>~~C1 or C2 mapped within R8A~~<br>~~C1-7A C4-4D C6-2A~~ | ~~60~~ | ~~85~~ | ~~120~~ |
| ~~R8X~~<br>~~C1 or C2 mapped within R8X~~ | ~~60~~ | ~~85~~ | ~~150~~ |

| | | | |
|---|---|---|---|
| ~~R9A*~~<br>~~C1 or C2 mapped within R9A*~~<br>~~C1-8A* C2-7A* C6-3A*~~ | ~~60~~ | ~~95~~ | ~~135~~ |
| ~~R9A**~~<br>~~C1 or C2 mapped within R9A**~~<br>~~C1-8A** C2-7A** C6-3A**~~ | ~~60~~ | ~~102~~ | ~~145~~ |
| ~~R9X*~~<br>~~C1 or C2 mapped within R9X*~~<br>~~C1-8X* C2-7X*~~ | ~~60~~ | ~~120~~ | ~~160~~ |
| ~~R9X**~~<br>~~C1 or C2 mapped within R9X**~~<br>~~C1-8X** C2-7X**~~ | ~~105~~ | ~~120~~ | ~~170~~ |
| ~~R10A*~~<br>~~C1 or C2 mapped within R10A*~~<br>~~C1-9A* C2-9A* C4-6A*C4-7A* C5-1A*~~<br>~~C5-2A* C6-4A*~~ | ~~60~~ | ~~125~~ | ~~185~~ |
| ~~R10A**~~<br>~~C1 or C2 mapped within R10A**~~<br>~~C1-9A** C2-8A** C4-6A** C4-7A** C5-1A** C5-2A** C6-4A**~~ | ~~125~~ | ~~150~~ | ~~210~~ |

~~* Denotes district mapped on #narrow street#~~

~~** Denotes district mapped on #wide street#~~

* * *

**62-60**
**DESIGN REQUIREMENTS FOR WATERFRONT PUBLIC ACCESS AREAS**

#Waterfront public access areas# required pursuant to Section 62-52 (Applicability of Waterfront Public Access Area Requirements) shall comply with the provisions of this Section, inclusive.

* * *

**62-62**
**Design Requirements for Shore Public Walkways and Supplemental Public Access Areas**

The design requirements of this Section shall apply to #shore public walkways# and #supplemental public access areas#, except as modified by Section 62-57 (Requirements for Supplemental Public Access Areas).

* * *

(c) Planting

* * *

(2) Screening buffer

* * *

(iii) No screening buffer shall be required:

(a) adjacent to a private drive, a #street# or at the entrances to #buildings#; or

(b) for a #commercial# or #community facility use# ~~where at least 70 percent of the area of the #building# facade, within a height of 10 feet, located~~ within a distance of 15 feet from the sidewalk or #waterfront public access area#, that is glazed with windows, transoms or glazed portions of doors in accordance with the provisions of Section 37-34 (Minimum Transparency Requirements). ~~Not less than 50 percent of the entire area of such #commercial# or #community facility use# shall be glazed with transparent materials and up to 20 percent of such area may be glazed with translucent materials.~~

* * *

# Article VI - Special Regulations Applicable to Certain Areas

**Chapter 3**
**Special Regulations Applying to FRESH Food Stores**

**63-00**
**GENERAL PURPOSES**

The provisions of this Chapter establish special regulations that guide the development of FRESH food stores to promote and protect public health, safety and general welfare. These general goals include, among others, the following purposes:

(a) encourage a healthy lifestyle by facilitating the development of FRESH food stores that sell a healthy selection of food products;

(b) provide greater incentives for FRESH food stores to locate in neighborhoods underserved by such establishments;

(c) encourage FRESH food stores to locate in locations that are easily accessible to nearby residents; and

(d) strengthen the economic base of the City, conserve the value of land and buildings, and protect the City's tax revenues.

* * *

**63-20**
**SPECIAL BULK AND PARKING REGULATIONS**

* * *

**63-22**
**Authorization to Modify Maximum Building Height**

For #buildings# containing a #FRESH food store#, the City Planning Commission may authorize modifications to Sections ~~35-24~~ 35-65 ~~(Special Street Wall Location and Height and Setback Regulations in Certain Districts)~~ (Height and Setback Requirements for Quality Housing Buildings) and 123-66 (Height and Setback Regulations) to allow the applicable maximum #building# height to be increased by up to 15 feet, provided that the first #story# occupied by a #FRESH food store# has a minimum finished floor to finished ceiling height of 14 feet, and provided that such finished ceiling height is at least 14 feet above the #base plane# or #curb level#, as applicable.

* * *

**63-23**
**Special Transparency Requirements**

For all #FRESH food stores#, the ground floor level of the #street wall# fronting upon a principal #street# shall be glazed in accordance the provisions of Section 37-34 (Minimum Transparency Requirements). ~~with materials which may include #show windows#, glazed transoms or glazed portions of doors. Such glazing shall occupy at least 70 percent of the area of such ground floor level #street wall#, measured to a height of 10 feet above the level of the adjoining sidewalk. No less than 50 percent of the area of such ground floor level #street wall# shall be glazed with transparent materials and up to 20 percent of such area may be glazed with translucent materials.~~

Furthermore, for #buildings# with frontage on two or more #streets#, the Chairperson of the City Planning Commission may certify that the glazing requirements of this Section shall only be applicable to the #street wall# fronting upon the principal #street#, as determined by the Chairperson.

In addition, the Chairperson of the City Planning Commission may, by certification, allow a reduction in the glazing requirements of this Section, provided that the Chairperson finds that such #mixed building#, or #mixed use building# as defined in Section 123-11, is a recipient of #public funding# as defined in Section 23-911 (General definitions). ~~Such reduced glazing may occupy no less than 50 percent of the area of such ground floor level #street wall# and shall be glazed with transparent materials.~~

~~**63-24**~~
~~**Security Gates**~~

~~All security gates installed between the #street wall# and the #street line# after December 9, 2009, that are swung, drawn or lowered to secure #FRESH food store# premises shall, when closed, permit visibility of at least 75 percent of the area covered by such gate when viewed from the #street#.~~

~~**63-25**~~ **63-24**
**Required Accessory Off-street Parking Spaces in Certain Districts**

* * *

# Article VI - Special Regulations Applicable to Certain Areas

**Chapter 4**
**Special Regulations Applying in Flood Hazard Areas**

**64-00**
**GENERAL PURPOSES**

The provisions of this Chapter establish special regulations which are designed to encourage flood-resilient building practices for new and existing buildings and in so doing to promote and protect public health, safety and general welfare. These general goals include, among others, the following purposes:

(a) to facilitate the development and alteration of buildings in flood zones consistent with the latest flood-resistant construction standards of the Federal government and the New York City Building Code;

(b) to enable buildings to be constructed pursuant to flood-resistant standards with a comparable amount of usable interior space to what is generally permitted within the applicable zoning district;

(c) to mitigate the effects of elevated and flood-proofed buildings on the streetscape and pedestrian activity;

(d) to expedite the recovery of neighborhoods that experienced a high concentration of damage to single- and two-family residences from Hurricane Sandy within the Neighborhood Recovery Areas specified in Appendix A of this Chapter; and

(e) to promote the most desirable use of land and thus conserve and enhance the value of land and buildings, and thereby protect the City's tax revenues.

* * *

**64-33**
**Special Height and Setback Regulations**

**64-331**
**Permitted obstructions for multi-family buildings in R3-2 and R4 Districts**

The provisions of this Section shall apply without requiring a #building# to comply with #flood-resistant construction standards# as established in paragraph (a) of Section 64-12 (Applicability).

In R3-2 and R4 ~~R-4~~ Districts, for all #buildings#, or portions thereof, subject to Section 23-60 (HEIGHT AND SETBACK REGULATIONS), except #single-# and #two-family residences#, elevator or stair bulkheads (including shafts, and vestibules not larger than 60 square feet in area providing access to a roof), roof water tanks and #accessory# mechanical equipment (including enclosures), other than solar or wind energy systems, shall be

considered permitted obstructions to height and setback regulations, provided that:

*  *  *

**Appendix A**
**Special Regulations for Neighborhood Recovery**

*  *  *

**64-A30**
**SPECIAL BULK REGULATIONS FOR THE RECONSTRUCTION OF BUILDINGS EXISTING ON OCTOBER 28, 2012**

*  *  *

**64-A31**
**Special Regulations for Minimum Required Open Space, Maximum Lot Coverage and Maximum Floor Area**

**64-A312**
**Floor area**

R2X R3 R4 R4-1 R4A

In the districts indicated, the #floor area ratio# set forth in ~~the table in paragraph (b) of~~ Section ~~23-141~~ 23-142 ~~(Open space and floor area regulations in R1, R2, R3, R4 or R5 Districts)~~ (Open space and floor area regulations in R1 and R2 Districts with a letter suffix as well as R3 through R5 Districts) may be increased by 20 percent provided that any such increase in #floor area# is located in any portion of a #building# covered by a sloping roof that rises at least seven inches in vertical distance for each foot of horizontal distance.

*  *  *

**64-A32**
**Special Regulations for Maximum Number of Dwelling Units and Minimum Size of Dwelling Units**

**64-A321**
**Maximum number of dwelling units**

R1 R2 R3 R4 R5 R6

In the districts indicated, the provisions of Section 23-22 (Maximum Number of Dwelling Units ~~or Rooming Units~~) shall not apply. In lieu thereof, not more than one #single-family detached residence# or, where permitted

in the applicable zoning district pursuant to Section 22-12 (Use Group 2), one #two-family detached residence#, may be reconstructed. However, any #two-family detached residence# may only be reconstructed if such #zoning lot# contained two or more #dwelling units# on October 28, 2012, as indicated on the certificate of occupancy or upon approval by the Board of Standards and Appeals pursuant to Section 64-A71 (Special Permit for Establishing Non-conformance).

*  *  *

**64-A36**
**Special Height and Setback Regulations**

R1 R2 R3 R4 R5 R6

In the districts indicated, the height and setback regulations of the applicable district shall not apply. In lieu thereof, all #buildings# shall be subject to the height and setback provisions set forth in paragraph (b) of Section 23-631 (General Provisions ~~Height and setback in R1, R2, R3, R4 and R5 Districts~~), except that the maximum height of a perimeter wall before setback shall be 19 feet, the maximum height of a ridge line shall be 25 feet and all heights shall be measured from the #flood-resistant construction elevation#. In no event shall any #building# exceed two #stories#, except that attic space providing structural headroom of less than eight feet shall not be considered a #story# for the purposes of this Section.

*  *  *

# Article VII - Administration

**Chapter 3**
**Special Permits by the Board of Standards and Appeals**

*  *  *

**73-10**
**SPECIAL PERMIT USES**

*  *  *

**73-12**
**Community Facility Uses in R1, R2, R3A, R3X, R3-1, R4A, R4B or R4-1 Districts**

*  *  *

**73-122**
**College or school student dormitories or fraternity or sorority student houses**

The Board of Standards and Appeals may permit college or school student dormitories or fraternity or sorority student houses in R1 or R2 Districts, provided that the following findings are made:

(a) that such #use# does not exceed the maximum #floor area ratio# for #residential use# as set forth in Section 23-14 (~~Minimum Required Open Space, Open Space Ratio, Maximum Lot Coverage and Maximum Floor Area Ratio~~ Open Space and Floor Area Regulations in R1 through R5 Districts);

*  *  *

**73-123**
**Non-commercial clubs**

The Board of Standard and Appeals may permit non-commercial clubs, except swimming pool clubs or clubs with swimming pools located less than 500 feet from any #lot line#, in R1 or R2 Districts, provided that the following findings are made:

(a) that such #use# is so located as not to impair the character of the surrounding area or its future development as a neighborhood of #single-family residences#;

(b) that such #use# is so located as to draw a minimum of vehicular traffic to and through local #streets#;

(c) that such #use# complies with the minimum required #open space ratio# and maximum #floor area ratio#

for #residential use# as set forth in Section 23-14 (~~Minimum Required Open Space, Open Space Ratio, Maximum Lot Coverage and Maximum Floor Area Ratio~~ Open Space and Floor Area Regulations in R1 through R5 Districts);

* * *

**73-40**
**MODIFICATIONS OF USE OR PARKING REGULATIONS**

* * *

**73-43**
**Reduction of Parking Spaces ~~for Houses of Worship or Places of Assembly~~**

The Board of Standards and Appeals may permit a reduction in the number of #accessory# off-street parking spaces required under the provisions of Sections 25-31, 36-21 or 44-21 (General Provisions) ~~for houses of worship or places of assembly~~, in accordance with the applicable provisions of Sections 73-431 through 73-435 ~~and 73-432~~ for the reduction of parking spaces.

* * *

**73-433**
**Reduction of parking spaces to facilitate affordable housing**

In all districts in the #Transit Zone#, the Board of Standards and Appeals may permit a waiver of, or a reduction in, the number of required #accessory# off-street parking spaces for #dwelling units# in a #development# or #enlargement# that includes at least 20 percent of all #dwelling units# as #income-restricted housing units# as defined in Section 12-10 (DEFINITIONS), provided that the Board finds that such waiver or reduction:

(a) will facilitate such #development# or #enlargement# by improving its financial feasibility;

(b) will not cause traffic congestion; and

(c) will not have undue adverse effects on residents, businesses or community facilities in the surrounding area, as applicable.

The Board may impose appropriate conditions and safeguards to minimize adverse effects on the character of the surrounding area.

**73-434**
**Reduction of existing parking spaces for income-restricted housing units**

For #zoning lots# within the #Transit Zone# containing #income-restricted housing units# existing on the (date of enactments), and subject to the restrictions of Section 25-251 (Income-restricted housing units except in affordable independent residences for seniors), the Board of Standards and Appeals may permit a waiver of, or a reduction in, the number of #accessory# off-street parking spaces required for such #income-restricted housing units#, provided that the Board finds that such waiver or reduction:

(a) will facilitate an improved site plan;

(b) will not cause traffic congestion; and

(c) will not have undue adverse effects on residents, businesses or community facilities in the surrounding area, as applicable.

Factors to be considered by the Board may include, without limitation, the use of the existing parking spaces by residents of the #zoning lot#, the availability of parking in the surrounding area, and the proximity of public transportation. The Board may impose appropriate conditions and safeguards to minimize adverse effects on the character of the surrounding area.

**73-435**
**Reduction of existing parking spaces for affordable independent residences for seniors**

For #zoning lots# outside the #Transit Zone# containing #affordable independent residences for seniors# existing on the (date of enactments), and subject to the restrictions of Section 25-252 (Affordable independent residences for seniors) the Board of Standards and Appeals may permit a reduction in the number of #accessory# off-street parking spaces required for such #affordable independent residences for seniors#, provided that the Board finds that such waiver or reduction:

(a) will facilitate an improved site plan;

(b) will not cause traffic congestion; and

(c) will not have undue adverse effects on residents, businesses or community facilities in the surrounding area, as applicable.

Any permitted reduction shall be in compliance with the parking requirement percentages for the applicable zoning district set forth in the table in Section 25-252.

Factors to be considered by the Board may include, without limitation, the use of the existing parking spaces by residents of the #zoning#, the availability of parking in the surrounding area, and the proximity of public transportation. The Board may impose appropriate conditions and safeguards to minimize adverse effects on the character of the surrounding area.

*  *  *

**73-60**
**MODIFICATIONS OF BULK REGULATIONS**

*  *  *

**73-62**
**Modification of Bulk Regulations for Buildings Containing Residences**

*  *  *

**73-623**
**Bulk modifications for Quality Housing buildings on irregular sites**

For #developments# or #enlargements# of #Quality Housing buildings#, the Board of Standards and Appeals may modify certain #bulk# regulations in accordance with paragraph (a), provided that the findings in paragraph (b) of this Section are met.

(a) The Board may modify the following underlying #bulk# regulations for #Quality Housing buildings#, whether individually or in any combination:

(1) for all #Quality housing buildings#, the applicable #lot coverage#, #yards#, #courts#, #street wall# location, setback requirements, minimum distance between windows and walls or #lot lines#, and sloping #base plane# regulations; or

(2) for #Quality Housing buildings# in which at least 50 percent of its #residential floor area# is #income-restricted housing units#, or at least 50 percent of its total #floor area# is a #long-term care facility# or philanthropic or non-profit institution with sleeping accommodation, the maximum base height, overall building height, and maximum number of #stories# permitted, provided that in no event shall such #building# heights or number of #stories# exceed those set forth in paragraph (a) of Section 23-664 (Enhanced height and setback regulations for certain buildings) for the applicable zoning district.

(b) In granting such special permit for #bulk# modifications, the Board shall find that:

(a) there are physical conditions, including irregularity, narrowness or shallowness of lot size or shape, or topographical features that create practical difficulties in complying with the #bulk# regulations for #Quality Housing buildings# and would adversely affect the #building# configuration or site plan;

(b) the practical difficulties of developing on the #zoning lot# have not been created by the owner or by a predecessor in title;

(c) the proposed modifications will not unduly obstruct access of light and air to adjoining properties or #streets#;

(d) the proposed scale and placement of the #development# or #enlargement# relates harmoniously with surrounding #buildings#; and

(e) the requested modification is the least amount necessary to relieve such practical difficulties.

The Board may prescribe appropriate conditions and safeguards to minimize adverse effects on the character of the surrounding area.

* * *

# Article VII - Administration

**Chapter 4**
**Special Permits by the City Planning Commission**

*  *  *

**74-50**
**OFF-STREET PARKING ESTABLISHMENTS**

*  *  *

**74-53**
**Accessory Group Parking Facilities for Uses in Large-Scale Residential Developments or Large-Scale Community Facility Developments or Large-Scale General Developments**

**74-531**
**Additional parking spaces or roof parking for accessory group parking facilities**

The City Planning Commission may permit #group parking facilities accessory# to #uses# in #large-scale residential developments# or #large-scale community facility developments# or #large-scale general developments# with more than the prescribed maximum number of parking spaces set forth in Sections 25-12, 36-12 and 44-12 (Maximum Size of Accessory Group Parking Facilities) or may permit modifications of the applicable provisions of Sections 25-11, 36-11 and 44-11 (General Provisions) so as to permit off-street parking spaces #accessory# to such #uses# to be located on the roof of a #building#.

*  *  *

**74-532**
**Reduction or waiver of parking requirements for accessory group parking facilities**

The City Planning Commission may, in conjunction with an application for a #large-scale residential development# or #large-scale general development# in the #transit zone# seeking a #bulk# modification, reduce or waive the number of required #accessory residential# off-street parking spaces, including any spaces previously required for an existing #building#, provided that the Commission finds that:

(1) where the applicant is seeking a reduction of parking spaces required by Section 25-23 (Requirements Where Group Parking Facilities Are Provided), such reduction will facilitate the development of #income-restricted housing units#, as defined in Section 12-10 (DEFINITIONS), in such #large-scale residential development# or #large-scale general development#;

(2) the anticipated rates of automobile ownership for residents of such #large-scale residential development# or #large-scale general development# are minimal and that such reduction or waiver is warranted;

(3) such reduction of parking spaces will not have undue adverse impacts on the residents, businesses or community facilities in the surrounding area; and

(4) such reduction of parking spaces will result in a better site plan with better quality open areas.

In determining the amount of parking spaces to reduce or waive, the Commission may take into account current automobile ownership patterns for an existing #building# containing #residences# on the #zoning lot#, as applicable.

The City Planning Commission may prescribe additional conditions and safeguards to minimize adverse effects on the surrounding area.

* * *

**74-63**
**Bus Stations**

* * *

**74-634**
**Subway station improvements in Downtown Brooklyn and in Commercial Districts of 10 FAR and above in Manhattan**

The City Planning Commission may grant, by special permit, a #floor area# bonus not to exceed 20 percent of the basic maximum #floor area ratio# permitted by the underlying district regulations, and may waive or modify the provisions of Article III, Chapter 7 (Special Regulations), and the #street wall# continuity provisions of Sections 81-43 (Street Wall Continuity Along Designated Streets), 91-31 (Street Wall Regulations) or 101-47 (Special Street Wall Location Regulations) for #developments# or #enlargements# located on #zoning lots# where major improvements to adjacent subway stations are provided in accordance with the provisions of this Section. For the purposes of this Section, "adjacent" shall mean that upon completion of the improvement, the #zoning lot# will physically adjoin a subway station mezzanine, platform, concourse or connecting passageway. Subway stations where such improvements may be constructed are those stations located within the #Special Midtown District# as listed in Section 81-292 (Subway station improvements), the #Special Lower Manhattan District# as listed in Section 91-43 (Special Permit for Subway Station Improvements), the #Special Downtown Brooklyn District# as listed in Section 101-211 (Special permit for subway station improvements), the #Special Union Square District# as listed in Section ~~118-60~~ 118-50 and those stations listed in the following table:

* * *

**74-70**
**NON-PROFIT HOSPITAL STAFF DWELLINGS**

* * *

**74-74**
**Large-Scale General Development**

* * *

**74-743**
**Special provisions for bulk modification**

(a) For a #large-scale general development#, the City Planning Commission may permit:

(1) distribution of total allowable #floor area#, #rooming units#, #dwelling units#, #lot coverage# and total required #open space# under the applicable district regulations within a #large-scale general development# without regard for #zoning lot lines# or district boundaries, subject to the following limitations:

* * *

(4) the maximum #floor area ratio# permitted pursuant to Section 23-142 (~~In R6, R7, R8 or R9 Districts~~ Open space and floor area regulations in other R1 and R2 Districts and R3 through R5 Districts) for the applicable district without regard for #height factor# or #open space ratio# requirements, provided that the #large-scale general development# is located partially in a C6-1, C6-2 or C6-3 District within the boundaries of Community Districts 2 or 7 in Manhattan or located within a C4-4 District within the boundaries of Queens Community District 7 and that a minimum of 50 percent of the required #open space# is provided within the #large-scale general development#. Required #open space# for the purposes of this paragraph, (a)(4), shall be calculated by utilizing the smallest #open space ratio# at the maximum #floor area ratio#, pursuant to Section 23-142 for the applicable district;

* * *

**74-80**
**TRANSIENT HOTELS**

* * *

**74-81**

**Affordable Independent Residences for Seniors ~~Non-profit Residences for the Elderly~~**

The related #accessory# social and welfare facilities minimum requirement, as set forth in Section 12-10 (DEFINITIONS – Affordable Independent Residences for Seniors ~~Non-profit Residence for the Elderly~~) may be reduced or waived in any #affordable independent residence for seniors# ~~#non-profit residence for the elderly#~~ as to which the City Planning Commission makes the following findings:

(a) the proposed #affordable independent residence for seniors# ~~#non-profit residence for the elderly#~~ is an addition to or #enlargement# or expansion of an existing #affordable independent residence for seniors# ~~#non-profit residence for the elderly#~~ and is located on a #zoning lot# no portion of which is more than 1,500 feet from the existing #affordable independent residence for seniors# ~~#non-profit residence for the elderly#~~;

(b) both #affordable independent residence for seniors# ~~#non-profit residences for the elderly#~~ will be owned, operated and maintained by the same sponsoring organization;

(c) the existing #affordable independent residence for seniors# ~~#non-profit residence for the elderly#~~ contains related social and welfare facilities which will be used to adequately and conveniently service tenants of both the existing and proposed #affordable independent residence for seniors# ~~#non-profit residences for the elderly#~~.

The Commission may prescribe appropriate conditions and safeguards to enhance the character and purposes of the project.

* * *

**74-90**
**USE AND BULK MODIFICATIONS FOR CERTAIN COMMUNITY FACILITY USES**

~~In all #Residence# and #Commercial Districts# except C7 and C8 Districts, which are in the Community Districts within which, pursuant to Section 22-42 (Certification of Certain Community Facility Uses), nursing homes and health-related facilities are not permitted as-of-right, the City Planning Commission may permit the #development#, #extension# or #enlargement# or change of #use# involving such nursing homes and health-related facilities where such #uses# are not permitted as-of-right, provided that the Commission finds:~~

~~(a) that the architectural landscaping treatment and the height of the proposed #building# containing such #uses# blends harmoniously with the topography of the surrounding area;~~

~~(b) that the proposed facility will not require any significant additions to the supporting services of the neighborhood or that provision for adequate supporting services has been made;~~

~~(c) that the #streets# providing access to such #use# are adequate to handle the traffic generated thereby~~

~~or provision has been made to handle such traffic;~~

~~(d) that the disadvantages to the community imposed by the concentration of these facilities in the Community District are outweighed by the benefits derived from the proposed #use#; and~~

~~(e) that in R1 and R2 Districts, such facilities are not proprietary nursing homes, proprietary health-related facilities or proprietary domiciliary care facilities for adults.~~

~~The Commission may prescribe appropriate conditions or safeguards to minimize the adverse effect of any #use# permitted under this Section on the character of the surrounding area.~~

~~Where such #use# is authorized by the Commission, it may be eligible for #bulk# modification, pursuant to the provisions of Sections 74-901 or 74-902.~~

~~Special permits granted by the Commission under Sections 74-901 or 74-902 on or before January 10, 1974, shall not require further approval or action pursuant to this Section or Sections 22-42 or 32-45.~~

~~In the event amendment CP-22490 is not held invalid by the courts, it shall be effective insofar as limiting vested rights is concerned but shall be superseded in all other respects by amendments CP-22490(A) and CP-22566.~~

**74-901**
**Long-Term Care Facilities in R1 and R2 Districts and certain Commercial Districts**

Pursuant to Section 22-22, the City Planning Commission may permit #long-term care facilities# in R1 and R2 districts, and in C1 and C2 districts mapped within such #Residence Districts#, provided that the following findings are made:

(a) that such #use# is compatible with the character or the future use or development of the surrounding area;

(b) that the #streets# providing access to such #use# are adequate to handle the traffic generated thereby or provision has been made to handle such traffic.

The City Planning Commission may prescribe appropriate conditions and safeguards to minimize adverse effects on the character of the surrounding area.

Where such #use# is authorized by the Commission, it may be eligible for #bulk# modification, pursuant to the provisions of Section 74-902.

**~~74-901~~ 74-902**

**Certain community facility uses in R1 and R2 Districts and certain Commercial Districts**

In R1 and R2 Districts, and in C1 and C2 Districts mapped within such #Residence Districts# for any #development#, #extension# or #enlargement# or change of #use# involving any #community facility uses# permitted as-of-right pursuant to the provisions of Section 22-13 (Use Group 3) or 22-14 (Use Group 4), or #long-term care facilities# for which a special permit has been granted pursuant to Section 74-901, ~~other than domiciliary care facilities for adults or those for which a permit is required by the Board of Standards and Appeals pursuant to Sections 73-12 (Community Facility Uses in R1 or R2 Districts) or 73-13 (Open Uses in R1 or R2 Districts),~~ the City Planning Commission may permit the allowable #community facility floor area ratio# and #lot coverage# of Section 24-11 (Maximum Floor Area Ratio and Percentage of Lot Coverage) to apply to all such #uses#, provided that the following findings are made:

(a) that the distribution of #bulk# on the #zoning lot# will not unduly obstruct the access of light and air in and to adjoining properties or public #streets#, and will result in satisfactory site planning and satisfactory urban design relationships of #buildings# to adjacent #streets# and the surrounding area;

(b) that the architectural and landscaping treatment and the height of the proposed #building# containing such #uses# blends harmoniously with the topography and the surrounding area;

(c) that the proposed facility will not require any significant additions to the supporting services of the neighborhood or that provision for adequate supporting services has been made; and

(d) that the #streets# providing access to such #use# are adequate to handle the traffic generated thereby or provision has been made to handle such traffic.

The Commission may request a report from appropriate governmental agencies with respect to #community facility uses# requesting a special permit under this Section.

To minimize traffic congestion in the area, the Commission may require where necessary off-street parking facilities and #accessory# off-street loading berths beyond the amount required by the district regulations.

The Commission may prescribe appropriate conditions and safeguards to minimize adverse effects on the character of the surrounding area.

**~~74-902~~ 74-903**

**Certain community facility uses in R3 to R9 Districts and certain Commercial Districts**

The City Planning Commission may permit the #community facility floor area ratio# and the #community facility bulk# provisions to apply to a #development#, #extension# or #enlargement#, or change of #use# containing #long-term care facilities# or philanthropic or non-profit institutions with sleeping accommodations, as set forth in paragraph (a), provided that the findings in paragraph (b) of this Section are met.

(a) The Commission may permit:

(1) In R3 through R9 Districts, and in C1 or C2 Districts mapped within an R3 through R9 District or #Commercial Districts# with an R3 through R9 District residential equivalent, the #community facility floor area ratio# of Section 24-11 (Maximum Floor Area Ratio and Percentage of Lot Coverage) to apply to #buildings# containing philanthropic or non-profit institutions with sleeping accommodations, as listed in Use Group 3;

(2) In R3A, R3X, R3-1, R4A, R4B, R4-1, and R5A Districts, and in C1 or C2 Districts mapped within R3A, R3X, R3-1, R4A, R4B, R4-1, and R5A Districts, the #community facility floor area ratio# of Section 24-11 to apply to #buildings# containing #long-term care facilities#, as listed in Use Group 3;

(3) In R3 through R5 Districts, except R3A, R3X, R3-1, R4A, R4B, R4-1, R5A, and R5D Districts, and in C1 or C2 Districts mapped within an R3 through R5 District, except R3A, R3X, R3-1, R4A, R4B, R4-1, R5A, and R5D Districts, the #bulk# regulations of Article II, Chapter 4, Article III, Chapter 3, or Article III, Chapter 5, as applicable, and the #community facility floor area ratio# of Section 24-11, to apply to #buildings# containing #long-term care facilities#; or

(4) In R6 through R10 Districts without a letter suffix, and in C1 or C2 Districts mapped within an R6 through R10 District without a letter suffix or in #Commercial Districts# with an R6 through R10 District equivalent without a letter suffix, the #bulk# regulations of Article II Chapter 4, Article III, Chapter 3, or Article III, Chapter 5, as applicable, and the #community facility floor area ratio# of Section 24-11, as applicable, to apply to #buildings# containing #long-term care facilities#.

(b) In order to grant such a special permit for #community facility floor area ratio# or #community facility bulk#, as applicable, the Commission shall find that:

(1) the distribution of #bulk# on the #zoning lot# will not unduly obstruct the access of light and air to adjoining properties or public #streets#, and will result in satisfactory site planning and satisfactory urban design relationships of #buildings# to adjacent #streets# and the surrounding area; and

(2) the #streets# providing access to such #use# will be adequate to handle the traffic generated thereby or provision has been made to handle such traffic.

The Commission may request a report from appropriate governmental agencies with respect to #community facility uses# requesting a special permit under this Section.

The Commission may prescribe appropriate conditions and safeguards to minimize adverse effects on the character of the surrounding area.

~~In R3, R4, R5, R6, R7, R8 and R9 Districts, and in all #Commercial Districts# except C7 or C8 Districts, the City Planning Commission may permit the allowable #community facility floor area ratio# of Section 24-11 (Maximum Floor Area Ratio and Percentage of Lot Coverage) to apply to any #development#, #extension# or #enlargement#, or change of #use# involving nursing homes, health-related facilities, sanitariums or philanthropic or non-profit institutions as listed in Use Group 3, each of which have secured certification by the appropriate governmental agency ; and in R3, R4, R5, R6 and R7 Districts, and in #Commercial Districts# with the equivalent #residential floor area ratio#, the Commission may permit the allowable #floor area ratio# of Section 23-147 (For non-profit residences for the elderly) to apply to domiciliary homes for adults which have secured certification by the appropriate governmental agency, provided the following findings are made:~~

~~(a) that the distribution of #bulk# on the #zoning lot# will not unduly obstruct the access of light and air to adjoining properties or public #streets#, and will result in satisfactory site planning and satisfactory urban design relationships of #buildings# to adjacent #streets# and the surrounding area;~~

~~(b) that the proposed facility will not require any significant additions to the supporting services of the neighborhood or that provision for adequate supporting services has been made; and~~

~~(c) that the #streets# providing access to such #use# will be adequate to handle the traffic generated thereby or provision has been made to handle such traffic.~~

~~The Commission may request a report from appropriate governmental agencies with respect to #community facility uses# requesting a special permit under this Section.~~

~~To minimize traffic congestion in the area, the Commission may require, where necessary, off-street parking facilities and #accessory# off-street loading berths beyond the amount required by the district regulations.~~

~~The Commission may prescribe appropriate conditions and safeguards to minimize adverse effects on the character of the surrounding area.~~

**~~74-903~~**
**~~Special permits for domiciliary care facilities for adults~~**

~~In all #Residence# and #Commercial Districts#, except C7 and C8 Districts, the City Planning Commission may permit the #development#, #extension# or #enlargement#, or change of #use# involving domiciliary care facilities for adults, provided that the Commission finds:~~

~~(a) that there is a program for residents including a maintenance and security plan for the facility;~~

~~(b) that there is a plan designating #open space# recreation areas for the use of the residents of the facility;~~

~~(c) that the architectural landscaping treatment and the height of the proposed #building# containing such #uses# blends harmoniously with the topography of the surrounding area;~~

~~(d) that the proposed facilities will not require any significant additions to the supporting services of the neighborhood or that provision for adequate supporting services has been made;~~

~~(e) that the #streets# providing access to such #use# are adequate to handle the traffic generated thereby or provision has been made to handle such traffic; and~~

~~(f) that in R1 and R2 Districts, such facilities are not proprietary domiciliary care facilities for adults.~~

~~The Commission may prescribe appropriate conditions or safeguards to minimize the adverse effect of any #use# permitted under this Section on the character of the surrounding area.~~

~~Where such #use# is authorized by the Commission, it may be eligible for #bulk# modification, pursuant to the provisions of Section 74-902 (Certain community facility uses in R3 to R9 Districts and certain Commercial Districts).~~

**74-91**
**Modification of Public Plazas**

In all districts, the City Planning Commission may permit modification of the provisions of Section 37-70 (PUBLIC PLAZAS) affecting the eligibility of #public plazas# for bonus #floor area#, provided that such modification shall not include any modification of Sections 23-15 (~~Maximum Floor Area Ratio in R10 Districts~~ Open Space and Floor Area Regulations in R6 through R10 Districts), 24-14 or 33-13 (Floor Area Bonus for a Public Plaza).

Any modification shall be conditioned upon the Commission finding that the usefulness and attractiveness of the #public plaza# will be assured by the proposed layout and design and that such modification will result in a superior urban design relationship with surrounding #buildings# and open areas.

The Commission may prescribe appropriate conditions and controls to enhance the relationship of such #public plazas# to surrounding #buildings# and open areas.

* * *

# Article VII - Administration

**Chapter 7**
**Special Provisions for Zoning Lots Divided by District Boundaries**

**77-00**
**GENERAL PROVISIONS**

**77-01**
**Applicability of This Chapter**

Whenever any #zoning lot# is located in two or more districts in which different #uses# are permitted, or in which different #use#, #bulk#, #accessory# off-street parking and loading, or other regulations apply, the provisions of this Chapter shall apply.

*  *  *

**77-20**
**BULK REGULATIONS**

*  *  *

**77-28**
**Height and Setback Regulations**

For #zoning lots# divided by district boundaries in which all applicable height and setback regulations include the use of #sky exposure planes#, the height and setback regulations of each #street# frontage of the #zoning lot# shall be determined by multiplying the quantitative requirements set forth in the regulations of the Chapters, which are applicable to each portion of such #street# frontage, by the percentage of such #street# frontage to which such regulations apply. The sum of the products obtained shall be the controlling requirements for the #zoning lot#.

In determining the percentage of such #street# frontage, the percentage shall be based on the total frontage of the #zoning lot# along such #street#.

However, if any portion of such #zoning lot# is located within a #Limited Height District#, the provisions of Sections 23-691, 24-591, 33-491 or 43-49 (Limited Height Districts) shall apply to such portion of the #zoning lot#.

For all other #zoning lots#, each portion of such #zoning lot# shall be regulated by the height and setback provisions applicable to the district in which such portion of the #zoning lot# is located.

In R2X, R3, R4 or R5 Districts, for #residential# portions of #buildings#, each portion of the #zoning lot# shall be governed by the height and setback regulations specified for the district in which it is located, as set forth in Article II, Chapter 3.

For the purposes of defining a #building# envelope pursuant to paragraph (b) of Section 23-631 (General Provisions~~Height and setback in R1, R2, R3, R4 and R5 Districts~~), apex points may be located on a zoning district boundary which divides a #building#.

Furthermore, if any portion of a #zoning lot# is located in an R2X, R3, R4, R4A or R4-1 District, the height and setback regulations specified for such district may apply to the entire #zoning lot# provided that such district comprises more than 50 percent of such #zoning lot#, and the greatest distance from the mapped district boundary to any #lot line# of such #zoning lot# in the district in which less than 50 percent of its area is located does not exceed 25 feet. Such distance shall be measured perpendicular to the mapped district boundary.

* * *

# Article VIII - Special Purpose Districts

**Chapter 1**
**Special Midtown District**

**81-00**
**GENERAL PURPOSES**

The “Special Midtown District” established in this Resolution is designed to promote and protect public health, safety and general welfare. These general goals include, among others, the following specific purposes:

(a) to strengthen the business core of Midtown Manhattan by improving the working and living environments;

(b) to stabilize development in Midtown Manhattan and provide direction and incentives for further growth where appropriate;

(c) to control the impact of buildings on the access of light and air to the streets and avenues of Midtown;

(d) to link future Midtown growth and development to improved pedestrian circulation, improved pedestrian access to rapid transit facilities, and avoidance of conflicts with vehicular traffic;

(e) to preserve the historic architectural character of development along certain streets and avenues and the pedestrian orientation of ground floor uses, and thus safeguard the quality that makes Midtown vital;

(f) to continue the historic pattern of relatively low building bulk in midblock locations compared to avenue frontages;

(g) to improve the quality of new development in Midtown by fostering the provision of specified public amenities in appropriate locations;

(h) to preserve, protect and enhance the character of the Theater Subdistrict as the location of the world's foremost concentration of legitimate theaters and an area of diverse uses of a primarily entertainment and entertainment-related nature;

(i) to strengthen and enhance the character of the Eighth Avenue Corridor and its relationship with the rest of the Theater Subdistrict and with the Special Clinton District;

(j) to create and provide a transition between the Theater Subdistrict and the lower-scale Clinton community to the west;

(k) to preserve, protect and enhance the scale and character of Times Square, the heart of New York City's entertainment district, and the Core of the Theater Subdistrict, which are characterized by a unique

combination of building scale, large illuminated signs and entertainment and entertainment-related uses;

(l) to preserve, protect and enhance the character of Fifth Avenue as the showcase of New York and national retail shopping;

(m) to preserve the midblock area north of the Museum of Modern Art for its special contribution to the historic continuity, function and ambience of Midtown;

(n) to protect and strengthen the economic vitality and competitiveness of the Grand Central Subdistrict by facilitating the development of exceptional and sustainable buildings within the Vanderbilt Corridor and enabling improvements to the pedestrian and mass transit circulation network;

(o) to ensure that development within the Vanderbilt Corridor occurs on sites that meet sound site planning criteria and therefore can accommodate additional density as appropriate;

(p) to protect and enhance the role of Grand Central Terminal as a major transportation hub within the City, to expand and enhance the pedestrian and mass transit circulation network connecting Grand Central Terminal to surrounding development, to minimize pedestrian congestion and to protect the surrounding area's special character;

(q) to expand the retail, entertainment and commercial character of the area around Pennsylvania Station and to enhance its role as a major transportation hub in the city;

(r) to provide freedom of architectural design within limits established to assure adequate access of light and air to the street, and thus to encourage more attractive and economic building forms without the need for special development permissions or "negotiated zoning"; and

(s) to promote the most desirable use of land and building development in accordance with the District Plan for Midtown and thus conserve the value of land and buildings and thereby protect the City's tax revenues.

* * *

**81-06**
**Applicability of Article VII Provisions**

**81-061**
**Applicability of Chapter 3 of Article VII**

Within the #Special Midtown District#, the following provisions regarding special permits by the Board of Standards and Appeals for #non-complying buildings# shall not be applicable:

Section 73-62~~1~~ (Enlargement, change of use, or ~~E~~extension within ~~or Conversion of B~~buildings

~~C~~containing ~~R~~residential ~~U~~uses)

Section 73-63 (Enlargement of Non-Residential Buildings)

Section 73-64 (Modifications for Community Facility Uses)

* * *

**81-067**
**Modification of provisions for minimum base height and street wall location in Historic Districts**

Within the Special Midtown District, for any #zoning lot# located in a Historic District designated by the Landmarks Preservation Commission, any applicable provisions relating to minimum base height and #street wall# location requirements as modified in Sections 81-43 (Street Wall Continuity Along Designated Streets), 81-621 (Special street wall requirements) pertaining to the Grand Central Subdistrict, 81-75 (Special Street Wall and Setback Requirements) pertaining to the Theater Subdistrict, 81-83 (Special Street Wall Requirements) pertaining to the Fifth Avenue Subdistrict, and 81-90 (SPECIAL REGULATIONS FOR PRESERVATION SUBDISTRICT) pertaining to mandatory #street walls# may be modified pursuant to ~~Sections 23-633 (Street wall location and height and setback regulations in certain districts)and 35-24 (Special Street Wall Location and Height and Setback Regulations in Certain Districts)~~ Sections 23-66 and 35-65 (Height and Setback Requirements for Quality Housing Buildings).

* * *

**81-20**
**BULK REGULATIONS**

* * *

**81-23**
**Floor Area Bonus for Public Plazas**

* * *

**81-231**
**Existing plazas or other public amenities**

(a) Elimination or reduction in size of existing #publicly accessible open area# or other public amenities

No existing #publicly accessible open area# or other public amenity, open or enclosed, for which a #floor area# bonus has been utilized, shall be eliminated or reduced in size, except by special permit of the City Planning Commission, pursuant to Section ~~74-763~~ 74-761 (Elimination or reduction in size of ~~existing~~ bonused public amenities).

* * *

**81-60**
**SPECIAL REGULATIONS FOR THE GRAND CENTRAL SUBDISTRICT**

* * *

**81-63**
**Transfer of Development Rights from Landmark Sites**

* * *

**81-634**
**Transfer of development rights by certification**

Within the Grand Central Subdistrict, the City Planning Commission may allow by certification:

* * *

(b) in conjunction with such transfer of development rights, modification of the provisions of Sections 77-02 (Zoning Lots not Existing Prior to Effective Date or Amendment of Resolution), 77-21 (General Provisions), 77-22 (Floor Area Ratio) and 77-25 (Density Requirements), as follows:

For any “receiving lot," whether or not it existed on December 15, 1961, or any applicable subsequent amendment thereto, #floor area#~~,~~ <u>or</u> #dwelling units# ~~or #rooming units#~~ permitted by the applicable district regulations which allow a greater #floor area ratio# may be located on a portion of such “receiving lot" within a district which allows a lesser #floor area ratio#, provided that the amount of such #floor area#~~,~~ <u>or</u> #dwelling units# ~~or #rooming units#~~ to be located on the side of the district boundary permitting the lesser #floor area ratio# shall not exceed 20 percent of the basic maximum #floor area ratio# or number of #dwelling units# ~~or #rooming units#~~ of the district in which such #bulk# is to be located.

**81-635**
**Transfer of development rights by special permit**

* * *

(a) The Commission may permit:

* * *

(2) modifications of the provisions of Sections 77-02 (Zoning Lots Not Existing Prior to Effective Date or Amendment of Resolution), 77-21 (General Provisions), 77-22 (Floor Area Ratio) and 77-25 (Density Requirements) for any #zoning lot#, whether or not it existed on December 15, 1961, or any applicable subsequent amendment thereto, #floor area#~~,~~ <u>or</u> #dwelling units# ~~or~~

~~#rooming units#~~ permitted by the district regulations which allow a greater #floor area ratio# may be located within a district that allows a lesser #floor area ratio#;

* * *

**81-70**
**SPECIAL REGULATIONS FOR THEATER SUBDISTRICT**

* * *

**81-74**
**Special Incentives and Controls in the Theater Subdistrict**

* * *

**81-746**
**Additional provisions for zoning lots divided by district or subdistrict core boundaries**

* * *

(b) Notwithstanding any other provisions of this Resolution, for any #zoning lot# which is divided by a boundary of the Theater Subdistrict Core as defined in Section 81-71 (General Provisions) and for which the basic maximum #floor area ratio# as set forth in Section 81-211 is the same for both the portion within and the portion outside of the Theater Subdistrict Core, the applicable underlying #bulk# regulations shall be modified, as follows:

(1) #floor area#, including bonus #floor area#, <u>or</u> #dwelling units# ~~or #rooming units#,~~ permitted by the applicable district regulations on that portion of the #zoning lot# within the Theater Subdistrict Core may be located on the portion of the #zoning lot# outside the Core, provided that the number of such #rooms#, if any, to be located outside of the Core shall not exceed the number permitted by the applicable district regulations; and

(2) #floor area#, including bonus #floor area#, <u>or</u> #dwelling units# ~~or #rooming units#,~~ permitted by the applicable district regulations on that portion of the #zoning lot# outside of the Theater Subdistrict Core shall not be located on the portion of the #zoning lot# within the Core.

(c) Notwithstanding any other provisions of this Resolution, for any #zoning lot# located wholly within the Theater Subdistrict and outside of the Theater Subdistrict Core that is divided by a boundary of the Eighth Avenue Corridor as defined in Section 81-71 and for which the basic maximum #floor area ratio# as set forth in Section 81-211 is the same for both the portion within and the portion outside of the Eighth Avenue Corridor, #floor area#, including bonus #floor area#, <u>or</u> #dwelling units# ~~or #rooming units#,~~ permitted by the applicable district regulations may be located on either side of the Eighth Avenue Corridor boundary.

* * *

# Article VIII - Special Purpose Districts

**Chapter 2**
**Special Lincoln Square District**

**82-00**
**GENERAL PURPOSES**

The "Special Lincoln Square District" established in this Resolution is designed to promote and protect public health, safety, general welfare and amenity. These general goals include, among others, the following specific purposes:

(a) to preserve, protect and promote the character of the #Special Lincoln Square District# area as the location of a unique cultural and architectural complex - an attraction which helps the City of New York to achieve preeminent status as a center for the performing arts, and thus conserve its status as an office headquarters center and a cosmopolitan residential community;

(b) to improve circulation patterns in the area in order to avoid congestion arising from the movements of large numbers of people; improvement of subway stations and public access thereto; including convenient transportation to, from and within the district; and provision of arcades, open spaces, and subsurface concourses;

(c) to help attract a useful cluster of shops, restaurants and related amusement activities which will complement and enhance the area as presently existing;

(d) to provide an incentive for possible development of the area in a manner consistent with the aforegoing objectives which are an integral element of the Comprehensive Plan of the City of New York;

(e) to encourage a desirable urban design relationship of each building to its neighbors and to Broadway as the principal street; and

(f) to promote the most desirable use of land in this area and thus to conserve the value of land and buildings, and thereby protect the City's tax revenues.

* * *

**82-10**
**MANDATORY DISTRICT IMPROVEMENTS**

* * *

**82-12**
**Mandatory Off-Street Relocation of a Subway Stair**

Where a #development# is constructed on a #zoning lot# that fronts on a sidewalk containing a stairway entrance into the West 59th Street (Columbus Circle) or the West 66th Street subway station and such #zoning lot# contains 5,000 square feet or more of #lot area#, the existing entrance shall be relocated from the #street# onto the #zoning lot# in accordance with the provisions of Sections ~~37-42 (Standards for Relocation, Design and Hours of Public Accessibility)~~ 37-41 (Standards for Location, Design and Hours of Public Accessibility) and ~~37-43 (Administrative Procedure for a Subway Stair Relocation)~~ 37-42 (Administrative Procedure for a Subway Stair Relocation or Renovation).

* * *

**82-20**
**SPECIAL USE AND SIGN REGULATIONS**

* * *

**82-23**
**Street Wall Transparency**

When the front #building# wall or #street wall# of any #building developed# after February 9, 1994, is located on Broadway, Columbus Avenue or Amsterdam Avenue, ~~at least 50 percent of the total surface area of the #street wall# between #curb level# and 12 feet above #curb level#, or to the ceiling of the first #story#, whichever is higher, shall be transparent. Such transparency shall begin not higher than 2 feet, 6 inches above #curb level#.~~ glazing shall be provided in accordance with the transparency requirements set forth in Section 37-34 (Minimum Transparency Requirements).

* * *

**82-30**
**SPECIAL BULK REGULATIONS**

* * *

**82-36**
**Special Tower Coverage and Setback Regulations**

The requirements set forth in Sections 33-45 (Tower Regulations) or ~~35-63~~ 35-64 (Special Tower Regulations for Mixed Buildings) for any #building#, or portion thereof, that qualifies as a "tower" shall be modified as follows:

* * *

(c) In Subdistrict A, the provisions of paragraph (a) of Section ~~35-63~~ 35-64, as modified by paragraphs (a) and (b) of this Section, shall apply to any #mixed building#.

*  *  *

**82-60**
**EXISTING PUBLICLY ACCESSIBLE OPEN AREAS OR OTHER PUBLIC AMENITIES**

No existing #publicly accessible open area# or other public amenity, open or enclosed, for which a #floor area# bonus has been utilized shall be eliminated or reduced in size, except by special permit of the City Planning Commission, pursuant to Section ~~74-763~~ 74-761 (Elimination or reduction in size of ~~existing~~ bonused public amenities).

Any existing open area for which a #floor area# bonus has not been utilized that occupies the same #zoning lot# as an existing #publicly accessible open area# or other public amenity, open or enclosed, for which a #floor area# bonus has been utilized, may be reduced in size or eliminated only upon certification of the Chairperson of the City Planning Commission that all bonused amenities comply with the standards under which such #floor area# bonus was granted.

*  *  *

# Article VIII - Special Purpose Districts

**Chapter 3**
**Special Limited Commercial District**

**83-00**
**GENERAL PURPOSES**

The "Special Limited Commercial District" established in this Resolution is designed to promote and protect public health, safety, general welfare and amenity. These general goals include, among others, the following specific purposes:

(a) to preserve, protect, and enhance the character of Historic Districts as the location of many of the city's most valued cultural assets;

(b) to improve circulation patterns in the areas in order to avoid congestion arising from the movements of large numbers of people;

(c) to help attract a useful cluster of shops, restaurants, cultural attractions and related activities which will complement and enhance the areas as presently existing; and

(d) to promote the most desirable use of land in these areas and thus to conserve the value of land and buildings, and thereby protect the City's tax revenues.

* * *

**83-03**
**Use Group "LC"**

Use Group "LC" comprises #residential uses# listed in Use Groups 1 and 2, and a group of specially related #uses# selected from Use Groups 3, 4, 5, 6, 8 and 9 to provide for the special needs, comfort, convenience, enjoyment, education and recreation of the residents of the surrounding communities and of the many visitors who are attracted to its activities.

* * *

B. Community Facilities

* * *

Philanthropic or non-profit institutions with or without sleeping accommodations, including ~~nursing homes or sanitariums~~ #long-term care facilities#, provided that the number of persons employed in central

office functions shall not exceed 50, and the amount of #floor area# used for central office purposes shall not exceed 25 percent of the total #floor area# or 25,000 square feet, whichever is greater

Proprietary hospitals and related facilities, except animal hospitals

Proprietary ~~nursing homes or sanitariums~~ #long-term care facilities#

* * *

# Article VIII - Special Purpose Districts

**Chapter 4**
**Special Battery Park City District**

**84-00**
**GENERAL PURPOSES**

The "Special Battery Park City District" established in this Resolution is designed to promote and protect public health, safety and general welfare. These general goals include among others, the following specific purposes:

(a) to strengthen the business core of Lower Manhattan by improving the working environment;

(b) to provide major additional space for expansion of office uses and their ancillary facilities;

(c) to broaden the regional choice of residence by introducing new housing in the vicinity of the major employment center of Lower Manhattan;

(d) to achieve a harmonious visual and functional relationship with adjacent areas;

(e) to create an environment which will be lively and attractive and provide daily amenities and services for the use and enjoyment of the working population and the new residents;

(f) to take maximum advantage of the beauty of the Hudson River waterfront, thereby best serving the downtown business community, the new residential population and providing regional recreation as well; and

(g) to promote the most desirable use of land and direction of building development in the Lower Manhattan area.

* * *

**84-10**
**ZONE A GENERAL DISTRICT REGULATIONS**

* * *

**84-11**
**General Provisions**

Except as expressly modified by the provisions of this Chapter, the regulations applying to an R10 District shall apply in subzones A-1, A-2, A-3, A-5 and A-6 of the #Special Battery Park City District#.

Notwithstanding any other provision of this Resolution, #developments# and #enlargements# may only be constructed in subzone A-4 in accordance with certifications given by the City Planning Commission. #Residential open space# in subzone A-4 shall be subject to the provisions of Sections 12-10 and 23-12 (Permitted Obstructions in Open Space). For every #dwelling unit# there shall be a minimum of 55.0 square feet of #open space~~#, and for every #rooming unit# there shall be a minimum of 44.0 square feet of #open space#~~. All other provisions of this Chapter with respect to Zone A shall not apply to #developments# or #enlargements# in subzone A-4 unless otherwise indicated.

**84-12**
**Use Regulations**

In the areas indicated as permitted #commercial# locations in Appendices 2.3 and 3.3, the #use# regulations applying in a C2 District shall apply, except as provided in Sections 84-031 (Special permit uses), 84-032 (Uses not permitted), 84-121 (Uses along Esplanade) and this Section.

In the case of a #mixed building# containing #residential# and #commercial uses# ~~non-#residential uses#~~, #residential uses# are permitted on the same #story# as a #commercial use# ~~non-#residential use#~~, provided no access exists between such #uses# at any level containing #residences# and provided any #commercial uses# ~~non-#residential uses#~~ are not located over any #residences#. However, such #commercial use# ~~non-#residential uses#~~ may be located over #residences# by authorization of the City Planning Commission upon finding that sufficient separation of #residences# from #commercial uses# ~~non-#residential uses#~~ exists within the #building#.

* * *

**84-13**
**Bulk Regulations**

* * *

The provisions of Sections ~~23-533~~ 23-532 (Required rear yard equivalents) and 24-11 (Maximum Floor Area Ratio and Percentage of Coverage), and Article VII, Chapter 8 (Special Regulations Applying to Large Scale Residential Developments) and Chapter 9 (Special Regulations Applying to Large Scale Community Facility Development), are not applicable.

The provisions of Section 23-70 (MINIMUM REQUIRED DISTANCE BETWEEN TWO OR MORE BUILDINGS ON A SINGLE ZONING LOT) may be modified by the Battery Park City Authority. Prior to the granting of any such modification, the Authority shall make the following findings:

* * *

# Article VIII - Special Purpose Districts

**Chapter 5**
**Special United Nations Development District**

**85-00**
**GENERAL PURPOSES**

The "Special United Nations Development District" established in this Resolution is designed to promote and protect public health, safety, general welfare and amenity. These general goals include, among others, the following specific purposes:

(a) to preserve, protect and promote the character of the Special United Nations Development District adjacent to the headquarters of the United Nations, an attraction which helps the City of New York to maintain its preeminent status as a center for international organizations, as an office headquarters center and a cosmopolitan residential community;

(b) to facilitate the continued growth of the programs and activities of the United Nations and to help assure the retention of the United Nations headquarters in the City of New York;

(c) to encourage the provision of suitable office facilities for the United Nations, missions of member nations of the United Nations, and for non-governmental organizations related to the United Nations, in an attractive environment within a reasonable distance of the United Nations;

(d) to encourage the provision of housing suitable for personnel of delegations and members of the United Nations staff within a reasonable distance of the United Nations;

(e) to encourage the provision of hotel accommodations in the immediate vicinity of the United Nations suitable for visiting heads of state and other dignitaries attending the United Nations;

(f) to encourage the provision of community facilities, meeting rooms, and other facilities suitable for United Nations related uses and purposes;

(g) to alleviate vehicular and pedestrian traffic congestion in the vicinity of the United Nations;

(h) to promote coordinated redevelopment of the area contiguous to the United Nations in a manner consistent with the foregoing objectives which are an integral element of the comprehensive plan of the City of New York;

(i) to provide freedom of architectural design in accommodating facilities for the United Nations and supporting activities within multi-use structures which produce more attractive and economic development; and

(j) to promote the most desirable use of land in this area in accordance with a well-considered plan to promote the special character of the district and its peculiar suitability for uses related to the United Nations and thus to conserve the value of land and buildings, and thereby protect the city's tax revenues.

* * *

**85-04**
**Modifications of Bulk Regulations**

* * *

In no event shall the maximum #floor area ratio# for the #Special United Nations Development District#, taken as a whole, exceed 15.0. The #floor area ratio# of a #residential building# or the #residential# portion of a #mixed building# shall not exceed the maximum #floor area ratio# set forth in Sections 34-112, ~~23-15~~ 23-152~~,~~ and 35-31- ~~and 35-32~~.

* * *

For a #residential building# or the #residential# portions of any mixed-#use building# located on the north side of 44th Street within the #Special United Nations Development District#, the provisions of Section ~~23-533~~ 23-532 (Required rear yard equivalents) and Section 23-711 (Standard minimum distance between buildings) shall not apply. Notwithstanding anything in this Resolution to the contrary, the minimum distance between a #residential# portion of a #building# and any other #building# on the same #zoning lot# within the #Special United Nations Development District# shall be not less than 28 feet.

For any #building# containing #residences# within the #Special United Nations Development District#, the applicable density requirements may be modified, but in no event shall there be less than 395 square feet of #residential floor area# per #dwelling unit# ~~or 300 square feet of #residential floor area# per #rooming unit#~~.

* * *

# Article VIII - Special Purpose Districts

**Chapter 6**
**Special Forest Hills District**

**86-00**
**GENERAL PURPOSES**

The "Special Forest Hills District" established in this Resolution is designed to promote and protect the public health, safety, general welfare and amenity of Forest Hills. The general goals include, among others, the following specific purposes:

(a) ensure that the form of new buildings is compatible with and relates to the built character of the Forest Hills neighborhood;

(b) preserve, protect and promote the special character of Austin Street as a regional shopping destination;

(c) create a graduated transition from the lower-scale character of Austin Street to the higher-scale character of Queens Boulevard;

(d) support a broad and vibrant mix of commercial and residential uses throughout the Special District;

(e) enhance the pedestrian setting of Austin Street through appropriate ground floor uses and structural requirements;

(f) promote the most desirable use of land and thus conserve and enhance the value of land and buildings, and thereby protect the City's revenue.

* * *

**86-10**
**SPECIAL USE REGULATIONS**

**86-11**
**Ground Floor Uses Along Designated Streets**

Along the portions of Austin Street and 71st Avenue specified on the map in the Appendix to this Chapter as Retail Continuity Streets, #uses# within #stories# that have a floor level within five feet of #curb level#~~, and within 30 feet of the #street wall#,~~ shall be limited to #commercial# or #community facility uses# permitted by the underlying district and the provisions of Section 86-12 (Modification of Uses on Austin Street) and shall extend to a minimum depth in accordance with the provisions set forth in Section 37-32 (Ground Floor Depth Requirements for Certain Uses).

~~The~~ Such ground floor #street# frontage of a #development# or #enlargement# constructed after March 24, 2009, shall be allocated exclusively to such #uses#, except for Type 2 lobby space, entryways or entrances to subway stations and #accessory# parking spaces provided in accordance with applicable provisions of Section 37-33 (Maximum Width of Certain Uses). ~~In no event shall the length of #street# frontage occupied by lobby space exceed, in total, 40 feet or 25 percent of the #building's# total #street# frontage, whichever is less.~~

* * *

**86-13**
**Location of Uses in Mixed Buildings**

The provisions of Section 32-422 (Location of floors occupied by commercial uses) are modified to permit #dwelling units# ~~or #rooming units#~~ on the same #story# as a #commercial use# ~~non-#residential use#~~ provided no access exists between such #uses# at any level containing #dwelling units# ~~or #rooming units#~~ and provided any #commercial uses# ~~non-#residential uses#~~ are not located directly over any #dwelling units# ~~or #rooming units#~~.

Such #commercial uses# ~~non-#residential uses#~~, however, may be located over #dwelling units# ~~or #rooming units#~~ by authorization of the City Planning Commission upon a finding that there is sufficient separation of #residential uses# from #commercial uses# ~~non-#residential uses#~~ within the #building#.

**86-14**
**Transparency Requirement**s

For #developments# or #enlargements# constructed after March 24, 2009, the ground floor #street wall# bounding any #commercial# or #community facility use#, other than a #school#, shall be glazed in accordance with the transparency requirements set forth in Section 37-34 (Minimum Transparency Requirements). ~~glazed with transparent materials which may include #show windows#, glazed transoms or glazed portions of doors.~~

~~For such #community facility uses#, the glazed area shall occupy at least 50 percent of the area of each such ground floor #street wall# measured to a height of 10 feet above the level of the adjoining sidewalk or public access area.~~

~~For #commercial uses#, such glazed area shall occupy at least 70 percent of the area of each such ground floor #street wall# measured to a height of 10 feet above the level of the adjoining sidewalk or public access area. Not less than 50 percent of such area shall be glazed with transparent materials and up to 20 percent of such area may be glazed with translucent materials.~~

~~**86-15**~~
~~**Security Gates**~~

~~For all #commercial# or #community facility uses# located on the ground floor, any security gates installed after~~

~~March 24, 2009, that are swung, drawn or lowered to secure #commercial# or #community facility# premises shall, when closed, permit visibility of at least 75 percent of the area covered by such gate when viewed from the #street# or any publicly accessible area, except that this provision shall not apply to entrances or exits to parking garages.~~

* * *

**86-20**
**SPECIAL BULK REGULATIONS**

* * *

**86-23**
**Height and Setback Regulations**

#Buildings or other structures# within the Special District shall comply with the height and setback regulations of Section ~~35-24 (Special Street Wall Location and Height and Setback Regulations in Certain Districts)~~ 35-65 (Height and Setback Requirements for Quality Housing Buildings), except as modified by this Section.

* * *

**86-40**
**SPECIAL OFF-STREET PARKING AND LOADING REGULATIONS**

* * *

**86-43**
**Modification of Parking Requirement Waivers**

The waiver provisions of Article III, Chapter 6 (Accessory Off-Street Parking and Loading Regulations), inclusive, shall be modified within the #Special Forest Hills District#, as follows:

(a) For any #development# or #enlargement# containing #residences#, the waiver modification provisions set forth in Section 36-362 (~~For developments or enlargements in~~ In other C1 or C2 Districts or in C4, C5 or C6 Districts), inclusive, shall not apply.

* * *

# Article VIII - Special Purpose Districts

**Chapter 7**
**Special Harlem River Waterfront District**

**87-00**
**GENERAL PURPOSES**

The "Special Harlem River Waterfront District" established in this Resolution is designed to promote and protect public health, safety and general welfare. These general goals include, among others, the following specific purposes:

(a) maintain and reestablish physical and visual public access to and along the waterfront;

(b) create a lively and attractive built environment that will provide amenities and services for the use and enjoyment of area residents, workers and visitors;

(c) promote the pedestrian orientation of ground floor uses in appropriate locations, and thus safeguard a traditional quality of higher density areas of the City;

(d) encourage well-designed development that complements the built character of the neighborhood;

(e) take advantage of the Harlem River waterfront and provide an open space network comprised of parks, public open space and public access areas;

(f) provide flexibility of architectural design within limits established to assure adequate access of light and air to streets and public access areas, and thus encourage more attractive and economic building forms; and

(g) promote the most desirable use of land and building development in accordance with the District Plan for the Harlem River waterfront.

* * *

**87-10**
**SPECIAL USE REGULATIONS**

* * *

**87-12**
**Location of Commercial Space**

The provisions of Section 32-422 (Location of floors occupied by commercial uses) are modified to permit #residential uses# on the same #story# as a #commercial use# ~~non-#residential use#~~, provided no access exists between such #uses# at any level containing #residences# and provided any #commercial uses# ~~non-#residential uses#~~ are not located directly over any #residential use#. However, such #commercial uses# ~~non-#residential uses#~~ may be located over a #residential use# by authorization of the City Planning Commission upon a finding that sufficient separation of #residential uses# from #commercial uses# ~~non-#residential uses#~~ exists within the #building#.

**87-13**
**Streetscape Regulations**

(a) Ground floor #use#

All ground floor #uses# facing a #shore public walkway#, mapped parkland or an #upland connection# shall comply with the minimum depth requirements of 37-32 (Ground Floor Depth Requirements for Certain Uses). For the purposes of applying such provisions, #shore public walkways#, mapped parkland or an #upland connection# shall be considered designated retail streets. ~~have a depth of at least 25 feet from #building# walls facing a #shore public walkway#, mapped parkland or an #upland connection#.~~ Lobbies and entrances shall comply with the provisions for Type 1 lobbies set forth in Section 37-33 (Maximum Width of Certain Uses) ~~may not occupy more than 20 feet or 25 percent of such #building# wall width, whichever is less~~. The level of the finished ground floor shall be located not higher than two feet above nor lower than two feet below the as-built level of the adjacent public sidewalk or other publicly accessible area.

For #buildings# on Parcels 1 through 6, as shown on Map 1 in the Appendix to this Chapter, that face a #shore public walkway#, mapped parkland or #upland connection#, not less than 20 percent of the ground floor level #floor area# of such portions of #buildings#~~, to a depth of 25 feet,~~ shall consist of #uses# from Use Groups 6A, 6C, 6F, 8A, 8B and 10A, as set forth in Article III, Chapter 2.

(b) Transparency

Any #building# wall containing ground floor level #commercial# and #community facility uses# that faces a #shore public walkway#, mapped parkland or an #upland connection#, shall be glazed ~~with transparent materials which may include #show windows#, glazed transoms or glazed portions of doors. Such glazing shall occupy at least 70 percent of the area of each such ground floor level #building# wall, measured to a height of ten feet above the level of the adjoining public sidewalk or other publicly accessible area or #base plane#, whichever is higher. Not less than 50 percent of the area of each such ground floor level #building# wall shall be glazed with transparent materials and up to 20 percent of such area may be glazed with translucent materials.~~in accordance with the transparency requirements set forth in Section 37-34 (Minimum Transparency Requirements). For the purposes of applying such provisions, #shore public walkways#, mapped parkland or an #upland connection# shall be considered designated retail streets.

~~(c) Security gates~~

~~All security gates that are swung, drawn or lowered to secure #commercial# or #community facility uses# shall, when closed, permit visibility of at least 75 percent of the area covered by such gate when viewed from the #street# or publicly accessible area, except that this provision shall not apply to entrances or exits to parking garages.~~

* * *

**87-20**
**SPECIAL FLOOR AREA REGULATIONS**

* * *

**87-21**
**Special Residential Floor Area Regulations**

The base #floor area ratio# for any #zoning lot# containing #residences# shall be 3.0. Such base #floor area ratio# may be increased to a maximum of 4.0 through the provision of #affordable housing# pursuant to the provisions for #Inclusionary Housing designated areas# in Section 23-90 (INCLUSIONARY HOUSING), except that the height and setback regulations of Section ~~23-954~~ 23-951 (Height and setback for compensated developments in Inclusionary Housing designated areas) and 23-664 (Modified height and setback requirements for certain buildings) shall not apply. In lieu thereof, the height and setback regulations of this Chapter shall apply.

* * *

**87-50**
**SPECIAL PARKING REGULATIONS**

* * *

(d) Design requirements for enclosed off-street parking facilities

All enclosed off-street parking facilities shall be located either entirely below the level of any #street# or open area accessible to the public upon which such facility fronts or, when located above grade, in compliance with the following provisions:

(1) The provisions of this paragraph, (d)(1), shall apply to facilities facing a #shore public walkway#, an #upland connection#, mapped parkland, or the northern #street line# of 138th Street.

~~Such facilities shall be located at~~ At every level above grade, off-street parking facilities shall be wrapped by #floor area in accordance with the provisions of paragraph (a) of Section 37-35

(Parking Wrap and Screening Requirements). For the purposes of applying such provisions, #shore public walkways#, mapped parkland or an #upland connection# and East 138th Street shall be considered designated retail streets. ~~behind #commercial#, #community facility# or #residential floor area# with a minimum depth of 25 feet as and measured from any #building# wall facing a #shore public walkway#, or facing that portion of an #upland connection# or mapped parkland located west of the #Parcel 1 building line# so that no portion of such parking facility is visible from the #shore public walkway#, #upland connection# or mapped parkland.~~ All such parking facilities shall be exempt from the definition of #floor area#.

On Parcel 6, as shown on Map 1 in the Appendix to this Chapter, the ground floor of a #building# within 60 feet of the intersection of Exterior Street and East 138th Street shall be wrapped by #floor area in accordance with the provisions of paragraph (a) of Section 37-35 ~~occupied to a depth of 25 feet with #commercial#, #community facility# or #residential floor area#~~ so that no portion of a parking facility is visible from such portion of Exterior Street or East 138th Street.

(2) The provisions of this paragraph, (d)(2), shall apply to facilities not facing a #shore public walkway#, or that portion of an #upland connection# or mapped parkland located west of the #Parcel 1 building line#, or the northern #street line# of East 138th Street.

Such facilities shall be ~~designed so that:~~ screened in accordance with the provisions set forth in paragraphs (b)(1) through (b)(3) of Section 37-35.

~~(i) any non-horizontal parking deck structures are not visible from the exterior of the #building# in elevation view;~~

~~(ii) opaque materials are located on the exterior #building# wall between the bottom of the floor of each parking deck and no less than three feet above such deck; and~~

~~(iii) a total of at least 50 percent of such exterior #building# wall with adjacent parking spaces consists of opaque materials which may include permitted #signs#, graphic or sculptural art, or living plant material.~~

* * *

# Article VIII - Special Purpose Districts

**Chapter 8**
**Special Hudson Square District**

**88-00**
**GENERAL PURPOSES**

The "Special Hudson Square District" established in this Resolution is designed to promote and protect public health, safety and general welfare. These general goals include, among others, the following specific purposes:

(a) support the growth of a mixed residential, commercial and industrial neighborhood by permitting expansion and new development of residential, commercial and community facility uses while promoting the retention of commercial uses and light manufacturing uses;

(b) recognize and enhance the vitality and character of the neighborhood for workers and residents;

(c) encourage the development of buildings compatible with existing development;

(d) regulate conversion of buildings while preserving continued manufacturing or commercial use;

(e) encourage the development of affordable housing;

(f) promote the opportunity for workers to live in the vicinity of their work;

(g) retain jobs within New York City; and

(h) promote the most desirable use of land in accordance with a well-considered plan and thus conserve the value of land and buildings, and thereby protect City tax revenues.

* * *

**88-10**
**SUPPLEMENTAL USE REGULATIONS**

* * *

**88-11**
**Residential Use**

#Residential use# shall be permitted in accordance with the provisions of this Section.

* * *

(b) #Residential use# by certification

#Residential use# shall be permitted on a #zoning lot# that, on March 20, 2013, was occupied by one or more #qualifying buildings#, only upon certification by the Chairperson of the City Planning Commission that the #zoning lot#, as it existed on March 20, 2013, will contain at least the amount of #commercial# or #manufacturing floor area# ~~non-#residential floor area#~~ that existed within such #qualifying buildings# on the #zoning lot# on March 20, 2013, subject to the following:

(1) #commercial# or #manufacturing floor area# ~~non-#residential floor area#~~ that is preserved within existing non-#qualifying buildings# on the #zoning lot# through restrictive declaration may count towards meeting the requirements of this certification; and

(2) #floor area# from #community facility uses# with sleeping accommodations shall not count towards meeting the requirements of this certification.

However, #commercial# or #manufacturing floor area# ~~non-#residential floor area#~~ converted to #residential# vertical circulation space and lobby space need not be replaced as #commercial# or #manufacturing floor area# ~~non-#residential floor area#~~.

A restrictive declaration acceptable to the Department of City Planning shall be executed and recorded, binding the owners, successors and assigns to maintain the amount of #commercial# or #manufacturing floor area# ~~non-#residential floor area#~~ that existed within such #qualifying buildings# on March 20, 2013, on the #zoning lot#. Such restrictive declaration shall be recorded in the Office of the City Register. A copy of such declaration shall be provided to the Department of Buildings upon application for any building permit related to a change of #use# from #commercial# or #manufacturing floor area# ~~non-#residential#~~ to #residential#, or for any #development# containing #residences#.

**88-12**
**Community Facility Use**

* * *

(b) #Community facilities# with sleeping accommodations shall be permitted on a #zoning lot# that, on March 20, 2013, was occupied by one or more #qualifying buildings#, only upon certification by the Chairperson of the City Planning Commission that the #zoning lot# will contain at least the amount of #commercial# or #manufacturing floor area# ~~non-#residential floor area#~~ that existed within #qualifying buildings# on the #zoning lot# on March 20, 2013, subject to the following:

(1) #commercial# or #manufacturing floor area# ~~non-#residential floor area#~~ that is preserved within existing non-#qualifying buildings# on the #zoning lot# through restrictive declaration may count towards meeting the requirements of this certification; and

(2) #floor area# from #community facility uses# with sleeping accommodations shall not count towards meeting the requirements of this certification.

However, #commercial# or #manufacturing floor area# ~~non-#residential floor area#~~ converted to vertical circulation and lobby space associated with a #community facility# with sleeping accommodations need not be replaced as #commercial# or #manufacturing floor area# ~~non-#residential floor area#~~.

A restrictive declaration acceptable to the Department of City Planning shall be executed and recorded, binding the owners, successors and assigns to maintain the amount of #commercial# or #manufacturing floor area# ~~non-#residential floor area#~~ that existed within such #qualifying buildings# on March 20, 2013, on the #zoning lot#. Such restrictive declaration shall be recorded in the Office of the City Register. A copy of such declaration shall be provided to the Department of Buildings upon application for any building permit related to a change of #use# from #commercial# or #manufacturing# ~~non-#residential#~~ to #community facility uses# with sleeping accommodations, or for any #development# containing #community facility uses# with sleeping accommodations.

(c) Ground floor #community facility uses# shall be subject to the streetscape provisions set forth in Section 88-131.

* * *

**88-13**
**Commercial Use**

* * *

**88-131**
**Streetscape provisions**

For #zoning lots# with #street# frontage of 50 feet or more, the location of certain #uses# shall be subject to the following #use# requirements.

(a) For #uses# located on the ground floor or within five feet of #curb level#, #uses# limited to Use Groups 6A, 6C, 7B, 8A, 8B, 9A, 10A, 12A and 12B, ~~shall have a depth of at least 30 feet from the #building# wall facing the #street# and~~ shall extend along a minimum of 50 percent of the width of the #street# frontage of the #zoning lot#, and shall comply with the minimum depth provisions of Section 37-32 (Ground Floor Depth Requirements for Certain Uses).

(b) The remainder of the #street# frontage of the #zoning lot# may be occupied by any permitted #uses#, lobbies or entrances to parking spaces, except that lobbies shall comply with the standards for Type 2 lobbies set forth in Section 37-33 (Maximum Width of Certain Uses) ~~be limited to a total width of 40 feet per #street# frontage. The 30 foot minimum depth requirement shall not apply where a reduction in such depth is necessary in order to accommodate a #residential# lobby or vertical circulation core~~.

(c) In Subdistrict A of this Chapter, for portions of a #building# bounding a #public park#, the ground floor #use# requirements of paragraph (a) of this Section shall apply to 100 percent of the width of the #street# frontage of the #zoning lot#, and #residential# lobbies and #schools# shall be permitted #uses# on the ground floor for purposes of compliance with paragraph (a).

For #zoning lots# with #street# frontage of less than 50 feet, no special ground floor #use# requirements shall apply.

Enclosed parking spaces, or parking spaces covered by a #building#, including such spaces #accessory# to #residences#, shall be permitted to occupy the ground floor, provided they are wrapped by #floor area# or screened ~~located beyond 30 feet from the #building# wall facing the #street#~~ in accordance with the provisions set forth in Section 37-35 (Parking Wrap and Screening Requirements).

Any ground floor #street wall# of a #development# or #enlargement# that contains #uses# listed in Use Groups 1 through 15, not including #dwelling units#, shall be glazed ~~with transparent materials which may include #show windows#, transom windows or glazed portions of doors, provided such transparent materials have a minimum width of two feet. Such transparency shall occupy at least 50 percent of the surface area of each such ground floor #street wall# between a height of two feet, and 12 feet or the height of the ground floor ceiling, whichever is higher, as measured from the adjoining sidewalk. The lowest level of any transparency that is provided to satisfy the requirements of this Section shall not be higher than four feet above the #curb level#, with the exception of transom windows. In addition, the maximum width of a portion of the ground floor level #street wall# without transparency shall not exceed ten feet. However, where an entrance to a parking facility is provided, the requirements of this Section shall not apply to that portion of the ground floor #street wall# occupied by such an entrance.~~ in accordance with the provisions set forth in Section 37-34 (Minimum Transparency Requirements).

* * *

**88-30**
**SPECIAL BULK REGULATIONS**

Except as modified in this Chapter, the following bulk regulations shall apply:

(a) For #developments#, #enlargements#, or changes of #use# containing #residences#, the #bulk# regulations of an R10 District, as set forth in Article II, Chapter 3 (Bulk Regulations for Residential Buildings in Residence Districts), shall apply;

(b) For #developments#, #enlargements#, or changes of #use# containing #manufacturing#, #commercial# or #community facility uses#, the #bulk# regulations set forth in Article IV, Chapter 3 (Bulk Regulations for Manufacturing Districts), shall apply.

For the purposes of applying the regulations of this Section, Greenwich Street shall be a #wide street#.

* * *

**88-33**
**Height and Setback**

In the #Special Hudson Square District#, the height and setback regulations of the underlying districts shall not apply. In lieu thereof, the provisions of this Section shall apply to all #buildings#.

(a) Rooftop regulations

* * *

(1) Permitted obstructions

* * *

In addition, dormers may penetrate a maximum base height provided that such dormers comply with the provisions of paragraph (c) of Section 23-621 (Permitted obstructions in certain districts) ~~on any #street# frontage, the aggregate width of all dormers at the maximum base height does not exceed 60 percent of the length of the #street wall# of the highest #story# entirely below the maximum base height. For each foot of height above the maximum base height, the aggregate width of all such dormers shall be decreased by one percent of the #street wall# width of the highest #story# entirely below the maximum base height.~~

(2) Screening requirements for mechanical equipment

For all #developments#, #enlargements# and #conversions# of #commercial# or #manufacturing floor area# ~~non-#residential floor area#~~ to #residences#, all mechanical equipment located on any roof of a #building or other structure# shall be fully screened on all sides. However, no such screening requirements shall apply to water tanks.

(b) Height and setback

* * *

(2) Base height

On #wide streets#, and on #narrow streets# within 50 feet of their intersection with a #wide street#, the #street wall# of a #building# shall rise without setback to a minimum base height of 125 feet and a maximum base height of ~~150~~ 155 feet.

On #narrow streets#, beyond 50 feet of their intersection with a #wide street#, the #street wall# of a #building# shall rise without setback to a minimum base height of 60 feet, or the height of the #building#, whichever is less, up to a maximum base height of ~~125~~ 135 feet.

* * *

(3) Required setbacks and maximum #building# heights

* * *

(ii) Along #narrow streets#

~~The provisions of this paragraph, (b)(3)(ii), shall apply to~~ For #buildings#, or portions thereof, located on #narrow streets# beyond 100 feet from their intersection with a #wide street#, the maximum height of a #building or other structure# and the maximum number of #stories# shall be as set forth in Section 23-662 (Maximum height of buildings and setback regulations) for an R10 District. For #developments# or #enlargements# providing either #affordable housing# pursuant to the Inclusionary Housing Program, as set forth in Section 23-90, inclusive, or #affordable independent residences for seniors#, where at least 20 percent of the #floor area# of the #zoning lot# is allocated to such #use#, such maximum heights and number of #stories# may be modified in accordance with the provisions of paragraph (a) of Section 23-664 for such districts' applicable residential equivalent. Separate maximum #building# heights are set forth within such Sections for #developments# or #enlargements# with #qualifying ground floors# and for those with #non-qualifying ground floors#, as defined in Section 23-662.

The portion of such #building# above a height of 125 feet shall be set back from the #street wall# of the #building# at least 15 feet, except such dimensions may include the depth of any permitted recesses in the #street wall#.

~~The maximum height of such #buildings# shall be 185 feet. However, for #buildings# that include #floor area compensation# pursuant to Sections 88-32 and 23-90 (Inclusionary Housing) for the provision of an amount of #low income floor area# not less than 20 percent of the #residential floor area# on the #compensated zoning lot#, the maximum height of such #building# shall be 210 feet where such #building# is on a #block# with a depth between #narrow streets# of more than 180 feet, and the maximum height of such #building# shall be 230 feet where such #building# is on a #block# where the depth between #narrow streets# is less than 180 feet~~

~~For #buildings# containing #residences#, all portions of such #building# exceeding a height of 125 feet above the level of the #residential rear yard# shall be set back no less than ten feet from a #rear yard line#. No setback shall be required for #buildings# that include #floor area compensation# pursuant to Sections 88-32 and 23-90 for the provision of an amount of #low income floor area# not less than 20 percent of the #residential floor area# on the #compensated zoning lot#.~~

* * *

**88-332**
**Courts**

Those portions of #buildings# that contain #residences# shall be subject to the court provisions applicable in R10 Districts as set forth in Section 23-80 (~~Court Regulations, Minimum Distance between Windows and Walls or Lot Lines and Open Area Requirements~~ COURT REGULATIONS, MINIMUM DISTANCE BETWEEN WINDOWS AND WALLS OR LOT LINES AND OPEN AREA REQUIREMENTS), inclusive.

* * *

**88-40**
**YARD REGULATIONS**

* * *

**88-41**
**Rear Yard Regulations for Shallow Through Lots**

For #through lots# or #through lot# portions of #zoning lots# located beyond 100 feet of a #wide street#, where the maximum depth of such #through lot# between #narrow streets# is ~~180~~ 190 feet or less, any required #rear yard equivalent# shall be provided in accordance with the provisions set forth in 23-533 (Required rear yard equivalents for Quality Housing buildings) ~~as an open area with a minimum depth of 60 feet, midway (or within ten feet of being midway) between the two #narrow street lines# upon which such #through lot# fronts~~.

* * *

# Article IX - Special Purpose Districts

**Chapter 1**
**Special Lower Manhattan District**

*  *  *

**91-00**
**GENERAL PURPOSES**

The "Special Lower Manhattan District" established in this Resolution is designed to promote and protect public health, safety, general welfare and amenity. These general goals include, among others, the following specific purposes:

(a) encourage development of a 24-hour community through the conversion of older commercial buildings to residential use;

(b) facilitate maximum design flexibility of buildings and enhance the distinctive skyline and streetscape of Lower Manhattan;

(c) improve public use and enjoyment of the East River waterfront by creating a better physical and visual relationship between development along the East River and the waterfront area, public access areas and the adjoining upland community;

(d) enhance the pedestrian environment by relieving sidewalk congestion and providing pedestrian amenities;

(e) restore, preserve and assure the use of the South Street Seaport Subdistrict as an area of small historic and restored buildings, open to the waterfront and having a high proportion of public spaces and amenities, including a South Street Seaport Environmental Museum, with associated cultural, recreational and retail activities;

(f) establish the Historic and Commercial Core to protect the existing character of this landmarked area by promoting development that is harmonious with the existing scale and street configuration; and

(g) promote the most desirable use of land and thus conserve and enhance the value of land and buildings, and thereby protect the City's tax revenues.

*  *  *

**91-05**
**Applicability of the Quality Housing Program**

Within the #Special Lower Manhattan District#, #buildings# containing #residences# may be #developed# or

#enlarged# in accordance with the provisions of Article II, Chapter 8 (The Quality Housing Program), except that the #bulk# regulations for #Quality Housing buildings# set forth in Article II, Chapter 3 and modified by Article III, Chapter 5, ~~of Section 28-11~~ shall be superseded by the #bulk# regulations of this Chapter. Recreation space required pursuant to Section ~~28-30~~ 28-20 (RECREATION SPACE AND PLANTING AREAS) shall be in addition to any recreation space required pursuant to this Chapter.

* * *

**91-20**
**FLOOR AREA AND DENSITY REGULATIONS**

* * *

**91-23**
**Floor Area Increase for Provision of Recreation Space**

In C5-3, C5-5 and C6-9 Districts, the #residential floor area ratio# of a #zoning lot# may be increased to 12.0, provided that recreation space, for the #residential# occupants of the #building# on such #zoning lot#, is provided in an amount not less than ~~13 square feet for each #rooming unit#,~~ 16.25 square feet for each #dwelling unit# or a total area of at least 5,000 square feet, whichever is greater.

* * *

# Article IX - Special Purpose Districts

**Chapter 3**
**Special Hudson Yards District**

**93-00**
**GENERAL PURPOSES**

The "Special Hudson Yards District" established in this Resolution is designed to promote and protect public health, safety and general welfare. These general goals include, among others, the following specific purposes:

(a) to facilitate and guide the development of an environmentally beneficial, transit-oriented business and residence district by coordinating high density development with expanded mass transit facilities, extended and improved subway lines, improved pedestrian access to mass transit facilities, improved pedestrian circulation and avoidance of conflicts with vehicular traffic;

(b) to control the impact of buildings on the access of light and air to the streets and avenues of the Hudson Yards area and the surrounding neighborhoods;

(c) to provide an open space network comprised of public parks, public open space and public access areas through the establishment of a large-scale plan and other controls and incentives;

(d) to preserve the pedestrian orientation of ground floor uses, and thus safeguard a traditional quality of the City;

(e) to preserve the low- and medium scale residential character of the Hell's Kitchen area;

(f) to provide a transition between the Hudson Yards District and the Clinton community to the north;

(g) to provide a transition between the Hudson Yards District and the Garment Center to the east;

(h) to provide a transition between the Hudson Yards District and the West Chelsea area to the south;

(i) to promote the use of the Jacob K. Javits Convention Center to the west by creating an active and attractive business district that facilitates pedestrian access to the Center;

(j) to provide flexibility of architectural design within limits established to assure adequate access of light and air to the street, and thus to encourage more attractive and economic building forms;

(k) to provide a transition between the Hudson Yards District and the Hudson River to the west;

(l) to facilitate the restoration and reuse of the High Line elevated rail line as an accessible, public open space through special height and setback regulations;

(m) to promote the most desirable use of land and building development in accordance with the District Plan for the Hudson Yards and thus conserve the value of land and buildings and thereby protect the City's tax revenues; and

(n) to limit the amount of off-street parking based on regulations that address the anticipated needs of residents, workers and visitors to the Hudson Yards Area, consistent with the objective of creating an area with a transit- and pedestrian-oriented neighborhood character.

* * *

**93-05**
**Applicability of District Regulations**

* * *

**93-053**
**Applicability of ~~Chapter 3 of~~ Article VII, Chapter 3**

The following special permits by the Board of Standards and Appeals shall not be applicable:

Section 73-16 (Public Transit, Railroad or Electric Utility Substations) shall not apply to electrical utility substations. In lieu thereof, such #uses# shall be allowed within the #Special Hudson Yards District# upon authorization of the City Planning Commission pursuant to Section ~~93-19~~ 93-18 (Authorization for Electrical Utility Substations)

Section 73-62 (Modification of Bulk Regulations for Residential Buildings)

Section 73-63 (Enlargement of Non-Residential Buildings)

Section 73-64 (Modifications for Community Facility Uses).

* * *

**93-10**
**USE REGULATIONS**

* * *

**93-12**
**Special Residential Use Regulations**

* * *

**93-123**
**Location of residential use within buildings**

The provisions of Section 32-422 (Location of floors occupied by commercial uses) are modified to permit #residential uses# on the same #story# as a #commercial use#, ~~non-#residential use#~~ provided no access exists between such #uses# at any level containing #dwelling units# and provided any #commercial uses# ~~non-#residential uses#~~ are not located directly over any #story# occupied in whole or in part by #dwelling units#. However, such #commercial uses# ~~non-#residential uses#~~ may be located over such a #story# occupied by #dwelling units# by authorization of the City Planning Commission upon a finding that sufficient separation of #residential uses# from #commercial uses# ~~non-#residential uses#~~ exists within the #building#.

* * *

**93-13**
**Special Office Use Regulations**

**93-131**
**Certification for office use**

The provisions of this Section shall apply to all #developments# or #enlargements# in the #Hudson Yards Redevelopment Area#, with the exception of Subdistrict F.

(a) No temporary certificate of occupancy from the Department of Buildings may be issued for any portion of a #development# or #enlargement# in the #Hudson Yards Redevelopment Area# that includes Use Group 6B offices #developed# or #enlarged# after January 19, 2005, until the Chairperson of the Department of City Planning certifies to the Commissioner of Buildings that:

(1) such #development# or #enlargement# does not utilize any #floor area# increases pursuant to Sections ~~23-90 (INCLUSIONARY HOUSING), 93-30 (SPECIAL FLOOR AREA REGULATIONS)~~ 23-154 (Inclusionary Housing), ~~inclusive,~~ or 96-25 (Floor Area Bonus for New Legitimate Theater Use); or

(2) such #development# or #enlargement# utilizes #floor area# increases pursuant to Sections ~~23-90~~23-154, 93-30, inclusive, or 96-25, and will not result in a total amount of Use Group 6B office #floor area# #developed# or #enlarged# after January 19, 2005, within the #Hudson Yards Redevelopment Area# of over 20 million square feet.

* * *

(b) Where the Chairperson of the Department of City Planning determines that the amount of office #floor area# in any #development# or #enlargement# will result in a total amount of Use Group 6B office #floor area developed# or #enlarged# after January 19, 2005, within the #Hudson Yards Redevelopment Area# of over 20 million square feet, no building permit from the Department of Buildings shall be issued for any #development# or #enlargement# that includes Use Group 6B offices constructed after January 19, 2005, until the Chairperson certifies to the Commissioner of Buildings that:

(1) such #development# or #enlargement# does not utilize any #floor area# increases pursuant to Sections ~~23-90~~ 23-154, 93-30, inclusive, or 96-25; or

(2) such #development# or #enlargement# utilizes #floor area# increases pursuant to Sections ~~23-90~~ 23-154, 93-30, inclusive, or 96-25, and will not result in a total amount of Use Group 6B office #floor area# #developed# or #enlarged# after January 19, 2005, within the #Hudson Yards Redevelopment Area# of over 25 million square feet.

* * *

(c) Where the Chairperson of the Department of City Planning determines that the amount of office #floor area# in any #development# or #enlargement# will result in a total amount of Use Group 6B office #floor area developed# or #enlarged# after January 19, 2005, within the #Hudson Yards Redevelopment Area# of over 25 million square feet, and where such #development# or #enlargement# utilizes #floor area# increases pursuant to Sections ~~23-90~~ 23-154, 93-30, inclusive, or 96-25, such #development# or #enlargement# shall be permitted only upon authorization of the City Planning Commission pursuant to Section 93-132.

* * *

**93-132**
**Authorization for office use**

The provisions of this Section shall apply to all #developments# or #enlargements# in the #Hudson Yards Redevelopment Area#, with the exception of Subdistrict F.

Where the amount of Use Group 6B office #floor area# in a #development# or #enlargement# will result in over 25 million square feet of such #use developed# or #enlarged# after January 19, 2005, within the #Hudson Yards Redevelopment Area#, and such #development# or #enlargement# utilizes increased #floor area# pursuant to Sections ~~23-90 (INCLUSIONARY HOUSING)~~ 23-154 (Inclusionary Housing), 93-30 (SPECIAL FLOOR AREA REGULATIONS), inclusive, or 96-25 (Floor Area Bonus for New Legitimate Theater Use), such #development# or #enlargement# shall be permitted only upon authorization of the City Planning Commission that:

* * *

**93-14**
**Ground Floor Level Requirements**

The following provisions relating to retail continuity and transparency requirements shall apply to all subdistricts in the #Special Hudson Yards District#, except that the provisions of this Section shall not apply along the northern #street# frontage of West 35th through West 39th Streets within 100 feet of Eleventh Avenue, as shown on Map 2 (Mandatory Ground Floor Retail) in Appendix A of this Chapter. However, any #zoning lot# fronting

on such #streets# and partially within 100 feet of Eleventh Avenue may, as an alternative, apply the provisions of this Section to the entire West 35th, West 36th, West 37th, West 38th or West 39th Street frontage of the #zoning lot#.

(a) Retail continuity along designated streets in Subdistricts A, B, C, D and E

Map 2 in Appendix A of this Chapter specifies locations where the special ground floor #use# and transparency requirements of this Section apply. Such regulations shall apply along either 100 percent or 50 percent of the #building's street# frontage, as indicated on Map 2.

#Uses# within #stories# that have a floor level within five feet of #curb level#~~, and within 50 feet of the #street line#~~ shall be limited to #commercial uses# permitted by the underlying district, ~~but~~ not including #uses# listed in Use Groups 6B, 6E, 7C, 7D, 8C, 8D, 9B, 10B, 11 or 12D. Such #uses# shall comply with the minimum depth provisions of Section 37-32 (Ground Floor Depth Requirements for Certain Uses). ~~Where a sidewalk widening is required, such #uses# shall be within 50 feet of the sidewalk widening line.~~

A #building's street# frontage shall be allocated exclusively to such #uses#, except for lobby space, entryways, entrances to subway stations, other subway-related #uses# as described in Section 93-65 (Transit Facilities), or within the Eastern Rail Yard Subarea A1 where such retail continuity requirements are applicable to #building# walls facing certain public access areas, pursuant to Section 93-71, as follows:

* * *

(4) a combination of retail #uses# and public access areas so as to satisfy ~~the 50 foot~~ such depth requirement for retail continuity.

~~In no event shall the~~ The length of #street# frontage (exclusive of any portion of such #street# frontage allocated to entrances to subway stations and other subway-related #uses#) occupied by lobby space or entryways shall comply with the applicable provisions for Type 2 lobbies in Section 37-33 (Maximum Width of Certain Uses), except that ~~exceed, in total, 40 feet or 25 percent of the #building's# total #street# frontage, whichever is less, except that the width of a lobby need not be less than 20 feet; and~~ within the Eastern Rail Yard Subarea A1, the width of a lobby located on a #building# wall facing the eastern boundary of the outdoor plaza may occupy 120 feet or 25 percent of such #building# wall, whichever is less.

(b) Retail continuity along designated streets in Subdistrict F

Map 4 (Subdistrict F: Mandatory Ground Floor Requirements) in Appendix B specifies locations where the special ground floor #use# and transparency requirements of this Section apply. Such regulations shall apply along either 100 percent or 70 percent of the #building's street# frontage, as indicated for each location on Map 4.

* * *

The remaining portion of the #street wall# may be occupied by #uses# listed in this Section, or by lobby space, mechanical space or entrances to #accessory# parking garages, provided that:

(i) the maximum width of a single lobby frontage shall comply with the provisions for Type 2 lobbies set forth in Section 37-33. ~~be 40 feet, or 25 percent of the #street wall#, whichever is less.~~ A maximum of two such lobbies shall be permitted along a single #street wall# frontage, provided that the minimum distance between such lobbies shall not be less than 120 feet; and

(ii) the maximum width of a #street wall# occupied by an entrance to #accessory# parking spaces shall not exceed 35 feet.

(c) Transparency requirements along designated streets in Subdistricts A, B, C, D, E and F

For any #development# or ground floor #enlargement# fronting on #streets# designated on Map 2 in Appendix A of this Chapter, glazing shall be provided in accordance with the provisions set forth in paragraph (c) of this Section.

Each ground floor level #street wall# of a #commercial# or #community facility use#, as set forth in this Section, shall be glazed in accordance with Section 37-34 (Minimum Transparency Requirements)~~with materials which may include #show windows#, glazed transoms or glazed portions of doors. Such glazing shall occupy at least 70 percent of the area of each such ground floor level #street wall#, measured to a height of 10 feet above the level of the adjoining sidewalk, or public access area, whichever is higher. Not less than 50 percent of the area of each such ground floor level #street wall# shall be glazed with transparent materials and up to 20 percent of such area may be glazed with translucent materials~~.

* * *

~~**93-15**~~
~~**Security Gates**~~

~~All security gates installed after January 19, 2005, that are swung, drawn or lowered to secure #commercial# or #community facility# premises shall, when closed, permit visibility of at least 75 percent of the area covered by such gate when viewed from the #street#, except that this provision shall not apply to entrances or exits to parking garages.~~

~~**93-16**~~ **93-15**
**Public Parking Facilities**

* * *

~~**93-17**~~ **93-16**

**Modification of Sign Regulations**

* * *

(a) Subdistricts A, B, C, D and E

Within Subdistricts A, B, C, D and E, the underlying #sign# regulations shall apply, except that #flashing signs# shall not be allowed within 100 feet of Hudson Boulevard, its northerly prolongation to West 39th Street and its southerly prolongation to West 33rd Street. Within the Pennsylvania Station Subarea B4, the provisions of Section ~~93-171~~ 93-161 (Special permit for signs within the Pennsylvania Station Subarea) shall apply. The following modifications to the underlying #sign# regulations shall apply in the Eastern Rail Yard Subarea A1:

* * *

(3) Along the #ERY High Line#, the #sign# regulations as set forth in Section ~~93-17~~ 93-16, paragraph (b)(1), shall apply. In addition, no #flashing signs# above the level of the #High Line bed# shall be located within 150 feet of and facing the #ERY High Line#.

* * *

**~~93-171~~ 93-161**
**Special permit for signs within the Pennsylvania Station Subarea**

* * *

**~~93-18~~ 93-17**
**Non-Conforming Uses in Large-Scale Plan Subdistrict A**

* * *

**~~93-19~~ 93-18**
**Authorization for Electrical Utility Substations**

* * *

**93-20**
**FLOOR AREA REGULATIONS**

* * *

**93-222**
**Maximum floor area ratio in the 34th Street Corridor Subdistrict C**

* * *

The #floor area ratio# of any #building# containing #residences# may be increased from 6.5, pursuant to Sections 93-31 (District Improvement Fund Bonus) and ~~23-90 (INCLUSIONARY HOUSING)~~ 23-154 (Inclusionary Housing), as modified by Section 93-23 (Modifications of Inclusionary Housing Program), as follows:

(a) the #residential floor area ratio# may be increased from 6.5 to a maximum of 12.0 only if for every five square feet of #floor area# increase, pursuant to Section 93-31, there is a #floor area# increase of six square feet, pursuant to Section ~~23-90~~ 23-154, as modified by Section 93-23; and

* * *

**93-223**
**Maximum floor area ratio in Hell's Kitchen Subdistrict D**

(a) Subareas D1 and D2

* * *

The #floor area ratio# of any #building# containing #residences# may be increased from 6.5 pursuant to Section 93-31 (District Improvement Fund Bonus) or through the transfer of #floor area# from the #Phase 2 Hudson Boulevard and Park# as set forth in Section 93-32, and pursuant to Section ~~23-90 (INCLUSIONARY HOUSING)~~ 23-154 (Inclusionary Housing), as modified by Section 93-23, as follows:

(1) The #residential floor area ratio# may be increased from 6.5 to a maximum of 12.0 only if for every five square feet of #floor area# increase pursuant to Sections 93-31 or 93-32 there is a #floor area# increase of six square feet, pursuant to Section ~~23-90~~ 23-154, as modified by Section 93-23.

* * *

**93-23**
**Modifications of Inclusionary Housing Program**

Subdistrict C (34th Street Corridor) and Subareas D1 and D2 of Subdistrict D (Hell's Kitchen) of the #Special Hudson Yards District# and Area P2 of the #Special Garment Center District#, shall be #Inclusionary Housing designated areas#, pursuant to Section 12-10 (DEFINITIONS) for the purpose of making the Inclusionary Housing Program regulations of Section 23-154 (Inclusionary Housing), and Section 23-90 (INCLUSIONARY

HOUSING), inclusive, applicable as modified within the Special Districts. The underlying provisions of Sections 23-154 and 23-90 shall only be applicable in Subdistrict F as modified by Section 93-233 (Floor area increase for affordable housing in Subdistrict F).

* * *

**93-232**
**Floor area increase in Subdistricts B, C, D and E, and Preservation Area P2**

Within Subdistricts B, C, D and E, and Preservation Area P2, the provisions of ~~Section 23-952 (Floor area compensation in Inclusionary Housing designated areas)~~ Section 23-154 (Inclusionary Housing) shall not apply. In lieu thereof, the #floor area# compensation provisions of this Section shall apply. In accordance with the provisions set forth in Section 93-22 (Floor Area Regulations in Subdistricts B, C, D, E and F) or 121-31 (Maximum Permitted Floor Area), the maximum permitted #residential floor area ratio# on a #zoning lot# with #developments# or #enlargements# that provide #affordable housing# pursuant to the Inclusionary Housing Program may be increased, as follows:

* * *

**93-233**
**Floor area increase for affordable housing in Subdistrict F**

* * *

(b) such #building# shall comply with the provisions of:

(1) Section ~~23-954~~ 23-955 (Additional requirements for compensated developments), paragraphs (b) and (c);

* * *

**93-30**
**SPECIAL FLOOR AREA REGULATIONS**

**93-31**
**District Improvement Fund Bonus**

* * *

(a) a letter from the applicant for such permit dated no earlier than 30 days prior to issuance thereof, stating whether as of such date the applicant anticipates filing an application to increase the applicable basic

maximum #floor area ratio# pursuant to the provisions of this Section and/or Section ~~23-90~~ 23-154, as modified by Section 93-23; or

(b) an application for a bonus from such applicant to increase the applicable basic maximum #floor area ratio# pursuant to the provisions of this Section and/or Section ~~23-90~~ 23-154, as modified by Section 93-23.

* * *

**93-32**
**Floor Area Regulations in the Phase 2 Hudson Boulevard and Park**

* * *

(a) Transfer of floor area by certification

* * *

Where, as a result of the transfer of #floor area# pursuant to this paragraph, (a), the amount of #floor area# on a receiving site is less than the maximum allowable as specified for the applicable subarea in Row B in the table in Section 93-21 and Row C in the table in Section 93-22, any additional #floor area#, up to the maximum #floor area ratio# permitted on the receiving site as specified in such rows, may be achieved only through contributions to the #Hudson Yards District Improvement Fund# pursuant to Section 93-31 (District Improvement Fund Bonus), an increase in #floor area# pursuant to paragraph (b) of this Section or Section 93-33 (Special Regulations for Residual Portions of Zoning Lots Partially Within the Phase 2 Hudson Boulevard and Park), or the Inclusionary Housing Program pursuant to Section ~~23-90~~ 23-154, as modified by Section 93-23.

* * *

**93-50**
**SPECIAL HEIGHT AND SETBACK REGULATIONS**

* * *

**93-55**
**Special Height and Setback Regulations in the South of Port Authority Subdistrict E**

(a) #Zoning lots# with Eighth Avenue frontage

* * *

(1) any portion of the #building or other structure developed# or #enlarged# pursuant to the tower regulations of Sections 33-45 or ~~35-63~~ 35-64, as applicable, may penetrate the #sky exposure plane#;

* * *

# Article IX - Special Purpose Districts

**Chapter 4**
**Special Sheepshead Bay District**

**94-00**
**GENERAL PURPOSES**

The "Special Sheepshead Bay District," established in this Resolution, is designed to promote and protect public health, safety, general welfare and amenity. These general goals include, among others the following specific purposes:

(a) to promote and strengthen the unique character of the "Special Sheepshead Bay District" area as a prime location for waterfront-related commercial and recreational development and to help attract a useful cluster of shops, restaurants and related activities, which will complement and enhance the area as presently existing;

(b) to encourage the provision of housing with appropriate amenities in areas suitable for residential development;

(c) to improve vehicular and pedestrian circulation patterns by requiring limited curb cuts and uniform sidewalk widening, and encouraging the provision of public open space and other amenities as a related part of new development;

(d) to provide an incentive for redevelopment of the area in a manner consistent with the foregoing objectives which are integral elements of the Comprehensive Plan of the City of New York; and

(e) to promote the most desirable use of land in this area and thus to conserve the value of land and thereby protect the City's tax revenues.

* * *

**94-10**
**SPECIAL REQUIREMENTS FOR BUILDING HEIGHT AND SETBACKS**

The height and setback regulations set forth in Sections 23-631 (~~Height and setback in R1, R2, R3, R4 and R5 Districts~~ General Provisions), 34-24 (Modification of Height and Setback Regulations) and ~~35-61~~ 35-62 (~~Height and Setback Regulations~~ Commercial Districts with an R1 through R5 Residential Equivalent), shall not apply to #buildings# in the #Special Sheepshead Bay District#. In lieu thereof, height and setback regulations set forth in this Section shall apply. For #buildings# in #Residence Districts#, #building# height is measured from the #base plane#. For #buildings# in #Commercial Districts#, #building# height is measured from #curb level#.

* * *

# Article IX - Special Purpose Districts

**Chapter 6**
**Special Clinton District**

**96-00**
**GENERAL PURPOSES**

The "Special Clinton District" (hereinafter also referred to as the "Special District"), established in this Resolution, is designed to promote and protect public health, safety, general welfare and amenity. Because of the unique geographical location of the Clinton community, situated between the waterfront on the west and a growing central business district on the east, it is necessary to provide specific programs and regulations which will assure realization of community and city-wide goals.

These goals include, among others, the following:

(a) to preserve and strengthen the residential character of the community;

(b) to permit rehabilitation and new construction within the area in character with the existing scale of the community and at rental levels which will not substantially alter the mixture of income groups presently residing in the area;

(c) to preserve the small-scale character and variety of existing stores and activities and to control new commercial uses in conformity with the existing character of the area;

(d) to recognize the unique character of the eastern edge of the District as an integral part of the Theater Subdistrict within the Special Midtown District as well as the Special Clinton District;

(e) to provide an appropriate transition from the mixed-use character along Eighth Avenue to the lower-scale residential character of the Clinton community on the narrow streets;

(f) to relate the unique character of the 42nd Street Perimeter Area to the adjacent #Special Hudson Yards District#;

(g) to provide amenities, such as street trees, to improve the physical environment;

(h) to restrict demolition of buildings that are suitable for rehabilitation and continued residential use; and

(i) to promote the most desirable use of land in the area and thus to conserve the value of land and buildings, and thereby protect the City's tax revenues, consistent with the foregoing purposes.

* * *

**96-10**
**PRESERVATION AREA**

*  *  *

**96-102**
**Lot coverage regulations**

*  *  *

Any #development# containing #residential uses# shall provide a minimum of 20 percent of the #lot area# of a #zoning lot# as usable, landscaped open area for occupants of #dwelling units# ~~or #rooming units#~~ in the #development#.

*  *  *

**96-105**
**Dwelling unit regulations**

(a) #Dwelling unit# distribution

For #developments#, #enlargements#, #extensions# or #conversions# of an existing #building# to a #residential use#, the density requirements of the underlying districts shall be inapplicable. In lieu thereof, the required #lot area per dwelling unit# of a #development#, #enlargement#, #extension# or #conversion# of an existing #building# to a #residential use# shall not be less than 168 square feet and the number of two-bedroom units on a #zoning lot# shall not be less than 20 percent.

*  *  *

The City Planning Commission, by special permit, may modify the two-bedroom unit distribution requirement and the density requirement of this Section for a ~~#non-profit residence for the elderly#~~ #affordable independent residence for seniors# or for a #residence# substantially for elderly persons with disabilities, under jurisdiction of a State or City agency, provided that the following findings are made:

*  *  *

**96-107**
**Special regulations for community facility uses**

#Developments#, #enlargements# or #extensions# of #community facility uses# or #conversions# of an existing #building# to a #community facility use#, are permitted on #zoning lots# containing existing #buildings# with #residential uses# only pursuant to the provisions of this Section. The City Planning Commission, by special permit, may permit #developments#, #enlargements# or #extensions# of #community facility uses#, provided that the Commission makes the following findings:

*  *  *

~~This special permit shall be in addition to any special permits required for nursing homes, health related facilities #long-term care facilities# and domiciliary care facilities for adults, pursuant to the provisions of Section 74-90.~~

The Commission may prescribe additional conditions and safeguards to minimize adverse effects on the character of the surrounding area.

*  *  *

**96-20**
**PERIMETER AREA**

*  *  *

**96-21**
**Special Regulations for 42nd Street Perimeter Area**

The provisions of this Section shall apply in all #Commercial Districts# within the area bounded by the following:

*  *  *

(b) #Floor area# regulations

(1) #Floor area# regulations in Subarea 1

In Subarea 1 of the 42nd Street Perimeter Area as shown in Appendix A, the basic #floor area ratio# on a #zoning lot# shall be 10.0, and may be increased to a maximum of 12.0 only in accordance with the provisions of Section ~~23-90 (INCLUSIONARY HOUSING)~~ 23-154 (Inclusionary Housing), except that any units for which a #floor area# increase has been earned, pursuant to Section ~~23-90~~ 23-154 shall be within the #Special Clinton District#.

(2) #Floor area# regulations in Subarea 2

In Subarea 2 of the 42nd Street Perimeter Area, as shown in Appendix A, the basic #floor area ratio# on a #zoning lot# shall be 10.0. However, the #floor area ratio# on a #zoning lot# containing #residential use# may exceed 10.0 to a maximum of 12.0 only in accordance with the provisions of Section ~~23-90~~ 23-154, except that any units for which a #floor area# increase has been earned pursuant to Section ~~23-90~~ 23-154 shall be within the #Special Clinton District#. For #zoning lots# containing #developments# or #enlargements# that have fully utilized the Inclusionary Housing Program, the maximum permitted #floor area ratio# may be increased from 12.0 to 15.0 for new legitimate theater use in accordance with the provisions of Section 96-25 (Floor Area Bonus for New Theater Use).

*  *  *

(c) Retail continuity requirements

For #buildings developed# or portions of #buildings enlarged# after August 17, 1990, where the ground floor level of such #development# or the #enlarged# portion of the #building# fronts upon West 42nd Street, between 9th and 12th Avenues:

(1) at least 50 percent of the #street# frontage of #stories# that have a floor level within five feet of #curb level# shall be limited to Use Groups 4A, 6A, 6C, 10A, 11, 12A and 12B; and

(2) ~~at least 50 percent of~~ the length of the facade of such #street wall# fronting on West 42nd Street shall be glazed ~~with transparent material to a height of not less than 16 feet above #curb level#. The lowest point of such glazed area shall not be higher than four feet above #curb level#.~~ in accordance with the provisions of Section 37-34 (Minimum Transparency Requirements).

*  *  *

**96-30**
**OTHER AREAS**

*  *  *

**96-31**
**Special Regulations in R8 Districts**

*  *  *

(b) In R8A Districts in Western Subarea C2, including #Commercial Districts# mapped within such R8A Districts, the following special regulations shall apply:

(1) Inclusionary Housing Program

(i) R8A Districts in Other Areas, west of Tenth Avenue, shall be #Inclusionary Housing designated areas#, pursuant to Section 12-10 (DEFINITIONS), for the purpose of making the Inclusionary Housing Program regulations of Section 23-90, inclusive, applicable as modified within the Special District.

Within such #Inclusionary Housing designated areas#, the maximum #floor area ratio# for any #zoning lot# containing a #residential use# shall not exceed a base #floor area ratio# of 5.4, except that such base #floor area ratio# may be increased to a maximum #floor area ratio# of 7.2 through the provision of #affordable housing#, pursuant to the provisions relating to #Inclusionary Housing designated areas# in Section 23-154 (Inclusionary Housing) and Section 23-90. However, any units for which a #floor area# increase has

been earned, pursuant to Section ~~23-90~~ 23-154, shall be located within the #Special Clinton District#.

(ii) Optional provisions for #affordable housing#

For #developments# or #enlargements# located within the #blocks# bounded by West 51st Street, 11th Avenue, West 53rd Street and 10th Avenue, the special optional regulations as set forth in paragraph (b)(1)(ii) of this Section, may modify the provisions of Section ~~23-952 (Floor area compensation in Inclusionary Housing designated areas)~~ 23-154.

The #residential floor area# of a #development# or #enlargement# may be increased by 0.833 square feet for each one square foot of #moderate income floor area#, or by 0.625 square feet for each one square foot of #middle income floor area#, provided that for each square foot of such #floor area compensation#, there is one square foot of #floor area compensation#, pursuant to ~~Section 23-952~~ Section 23-154. However, the amount of #affordable housing# required to receive such #floor area compensation# need not exceed the amounts specified as follows. If #affordable housing# is provided for both #low income# and #moderate income households#, the amount of #moderate income floor area# need not exceed 15 percent of the total #floor area#, exclusive of ground floor non-#residential floor area#, on the #zoning lot#, provided that the amount of #low income floor area# is at least 10 percent of the total #floor area#, exclusive of ground floor non-#residential floor area#, on the #zoning lot#. If #affordable housing# is provided for both #low income# and #middle income households#, the amount of #middle income floor area# need not exceed 20 percent of the total #floor area#, exclusive of ground floor non-#residential floor area#, on the #zoning lot#, provided that the amount of #low income floor area# is at least 10 percent of the total #floor area#, exclusive of ground floor non-#residential floor area#, on the #zoning lot#.

* * *

**96-32**
**Special Regulations in R9 Districts**

In R9 Districts in Western Subarea C2, the provisions of ~~Section 23-633 (Street wall location and height and setback regulations in certain districts)~~ Section 23-66 (Height and Setback Requirements for Quality Housing Buildings) for R9A Districts shall apply to all #buildings or other structures#. In #Commercial Districts# mapped within R9 Districts in Western Subarea C2, the provisions of ~~Section 35-24 (Special Street Wall Location and Height and Setback Regulations in Certain Districts)~~ Section 35-65 (Height and Setback Requirements for Quality Housing Buildings) for C2-7A Districts shall apply to all #buildings or other structures#. Notwithstanding the provisions of paragraph (c) of Section 23-011 (Quality Housing Program), in all such R9 Districts and #Commercial Districts# mapped within such R9 Districts, the provisions of paragraph (b) of Section 23-011 shall apply.

(a) Inclusionary Housing Program

(1) R9 Districts in Other Areas, west of Tenth Avenue, shall be #Inclusionary Housing designated areas# pursuant to Section 12-10 (DEFINITIONS) for the purpose of making the Inclusionary Housing Program regulations of Section 23-90, inclusive, applicable as modified within the Special District.

Within such #Inclusionary Housing designated area#, the maximum #floor area ratio# for any #zoning lot# containing a #residential use# shall not exceed a base #floor area ratio# of 6.0, except that such base #floor area ratio# may be increased to a maximum #floor area ratio# of 8.0 through the provision of #affordable housing#, pursuant to the provisions relating to #Inclusionary Housing designated areas# in 23-154 (Inclusionary Housing) and Section 23-90. However, any units for which a #floor area# increase has been earned pursuant to Section ~~23-90~~ 23-154 shall be located within the #Special Clinton District#.

(2) Optional provisions for #large-scale general developments# within Western Subarea C2

For #developments# or #enlargements# located within the #blocks# bounded by West 51st Street, 11th Avenue, West 53rd Street and 10th Avenue, the special optional regulations as set forth in paragraph (a)(2) of this Section, may modify the provisions of ~~Section 23-952 (Floor area compensation in Inclusionary Housing designated areas)~~ Section 23-154.

The #residential floor area# of a #development# or #enlargement# may be increased by 0.833 square feet for each one square foot of #moderate income floor area#, or by 0.625 square feet for each one square foot of #middle income floor area#, provided that for each square foot of such #floor area compensation#, there is one square foot of #floor area compensation#, pursuant to ~~Section 23-952~~ Section 23-154. However, the amount of #affordable housing# required to receive such #floor area compensation# need not exceed the amounts specified as follows. If #affordable housing# is provided for both #low income# and #moderate income households#, the amount of #moderate income floor area# need not exceed 15 percent of the total #floor area#, exclusive of ground floor non-#residential floor area#, on the #zoning lot#, provided that the amount of #low income floor area# is at least 10 percent of the total #floor area#, exclusive of ground floor non-#residential floor area#, on the #zoning lot#. If #affordable housing# is provided for both #low income households# and #middle income households#, the amount of #middle income floor area# need not exceed 20 percent of the total #floor area#, exclusive of ground floor non-#residential floor area#, on the #zoning lot#, provided that the amount of #low income floor area# is at least 10 percent of the total #floor area#, exclusive of ground floor non-#residential floor area#, on the #zoning lot#.

* * *

**96-34**
**Special Regulations in Northern Subarea C1**

In Area C1-1, within Northern Subarea C1, as shown on the map in Appendix A, the following special

Inclusionary Housing regulations, #use# and special permit regulations shall apply:

(a) Inclusionary Housing Program

* * *

Within such #Inclusionary Housing designated area# the following special regulations shall apply. The #residential floor area# of the #zoning lot# may be increased by 1.25 square feet for each square foot of #low income floor area# provided, or by 0.625 square feet for each one square foot of #middle income floor area# provided, up to the maximum #floor area# set forth in Section 23-154 (Inclusionary Housing). However, the amount of #low income floor area# plus half the amount of #middle income floor area# required to receive such #floor area compensation# need not exceed 20 percent of the total #floor area#, exclusive of ground floor non-#residential floor area# on the #compensated zoning lot#, provided that no more than 8,000 square feet of #middle income floor area# may be included within this calculation.

* * *

**96-40**
**MODIFICATION OF GENERAL LARGE-SCALE DEVELOPMENT PROVISIONS**

For parcels within the #blocks# bounded by West 50th Street, Tenth Avenue, West 56th Street and Eleventh Avenue, within a #general large-scale development# that occupies #zoning lots# on more than one #block#, the City Planning Commission may permit the modification of #open space# required pursuant to ~~Section 23-14 (Minimum Required Open Space, Open Space Ratio, Maximum Lot Coverage and Maximum Floor Area Ratio)~~ Section 23-15 (Open Space and Floor Area Regulations in R6 through R10 Districts) as part of a special permit, pursuant to Section 74-743 (Special provisions for bulk modifications), provided the Commission finds that:

* * *

# Article IX- Special Purpose Districts

**Chapter 7**
**Special 125th Street District**

**97-00**
**GENERAL PURPOSES**

The "Special 125th Street District" established in this Resolution is designed to promote and protect the public health, safety, general welfare and amenity. The general goals include, among others, the following specific purposes:

(a) to preserve, protect and promote the special character of 125th Street as Harlem's "Main Street" and the role of 125th Street as Upper Manhattan's premier mixed use corridor;

(b) to guide development on the 125th Street corridor;

(c) to expand the retail and commercial character of 125th Street;

(d) to provide incentives for the creation of visual and performing arts space and enhance the area's role as a major arts, entertainment and cultural destination in the City;

(e) to support mixed use development throughout the 125th Street corridor, including residential uses, and to provide incentives for the production of affordable housing;

(f) to ensure that the form of new buildings is compatible and relates to the built character of the 125th Street corridor;

(g) to enhance the pedestrian environment through appropriate ground floor uses and regulations;

(h) to promote the most desirable use of land and thus conserve and enhance the value of land and buildings, and thereby protect the City's revenue.

* * *

**97-20**
**LOCATION AND ACCESS REGULATIONS**

* * *

**97-21**
**Location of and Access to Arts and Entertainment Uses**

Any arts and entertainment #uses# listed in Section 97-11 that are provided in order to comply with the requirements of Section 97-12 (Arts and Entertainment Use Requirement) or Section 97-422 (Floor area bonus for visual or performing arts uses) shall be subject to the following location and access requirements:

The designated #uses# listed in Section 97-11 may be located anywhere throughout a #building# that fronts on 125th Street, subject to the following conditions:

(a) any such designated #uses# within the Core Subdistrict required pursuant to Section 97-12 shall be accessed from 125th Street; and

(b) any #residential use# shall be located on a floor wholly above any #commercial use# ~~non-#residential use#~~; or

(c) any #commercial use# ~~non-#residential use#~~ may be permitted on the same #story# as a #residential use#, provided that:

(1) no access exists between #commercial uses# ~~non-#residential uses#~~ and #residential uses# at any level; and

(2) #commercial uses# ~~non-#residential uses#~~ are not located directly over any #residential uses#.

Such #commercial use# ~~non-#residential use#~~, however, may be located over a #residential use# by authorization of the City Planning Commission upon a finding that sufficient separation of #residential uses# from #commercial uses# ~~non-#residential uses#~~ exists within the #building#.

* * *

**97-221**
**Access to non-ground floor uses**

The maximum ground floor #street# frontage on 125th Street allocated to entranceways or lobby space for non-ground floor #uses# listed in Section 97-22 shall be as set forth for Type 1 lobbies in Section 37-33 (Maximum Width of Certain Uses), except that for #developments# or #enlargements# with at least 200 linear feet fronting on 125th Street, the Type 2 lobby regulations shall apply.

Additionally, within the Core Subdistrict the #residential# portion of a #development# or #enlargement# may be accessed from an entrance on 125th Street only if such #development# or #enlargement# does not front upon a #street# other than 125th Street.

~~For non-ground floor #uses# listed in Section 97-22 with access from 125th Street, the following requirements shall apply:~~

~~(a) Within the Core Subdistrict the #residential# portion of a #development# or #enlargement# may be accessed from an entrance on 125th Street only if such #development# or #enlargement# does not front upon a #street# other than 125th Street.~~

~~(b) The width of the ground floor #street# frontage on 125th Street allocated to an entranceway or lobby space shall be no more than 25 linear feet or 40 percent of such #street# frontage, whichever is less, except that an entranceway or lobby space need not be less than 20 feet.~~

~~(c) For a #development# or #enlargement# with more than one entranceway or lobby on 125th Street for non-ground floor #uses#, each entranceway or lobby for #uses# listed in Section 97-22 shall be no more than 25 linear feet and, in the aggregate, shall not exceed 40 percent of such ground floor frontage.~~

~~(d) For #developments# or #enlargements# with at least 200 linear feet fronting on 125th Street, the width of #street# frontage on 125th Street allocated to entranceways or lobby space for such #uses# shall be no more than 40 linear feet.~~

**97-23**
**Transparency Requirements**

For all #uses#, other than houses of worship, libraries and primary rehearsal spaces, located on the ground floor of #developments# and #enlargements# that front upon that portion of 125th Street located within the #Special 125th Street District#, the ground floor #street wall# shall be glazed in accordance with the provisions set forth in Section 37-34 (Minimum Transparency Requirements). ~~with materials which may include #show windows#, glazed transoms or glazed portions of doors. Such glazed area shall occupy at least 70 percent of the area of each such ground floor #street wall#, measured to a height of 12 feet above the level of the adjoining sidewalk or public access area. Not less than 50 percent of such area shall be glazed with transparent materials and up to 20 percent of such area may be glazed with translucent materials.~~

~~**97-24**~~
~~**Security Gates**~~

~~Within the #Special 125th Street District#, all security gates installed after April 30, 2008, that are swung, drawn or lowered to secure #commercial# or #community facility# premises shall, when closed, permit visibility of at least 75 percent of the area covered by such gate when viewed from the #street#, except that this provision shall not apply to entrances or exits to parking garages.~~

* * *

**97-40**
**SPECIAL BULK REGULATIONS**

* * *

**97-42**
**Floor Area Bonuses**

The maximum #floor area ratio# may be increased by a #floor area# bonus, pursuant to Sections 23-154 (Inclusionary Housing) ~~23-90 (INCLUSIONARY HOUSING), inclusive~~, or 97-422 (Floor area bonus for visual or performing arts uses), which may be used concurrently.

**97-421**
**Inclusionary Housing**

Within the #Special 125th Street District#, C4-4D, C4-7 and C6-3 Districts shall be #Inclusionary Housing designated areas#, pursuant to Section 12-10 (DEFINITIONS), for the purpose of making the Inclusionary Housing Program regulations of Section 23-90 (INCLUSIONARY HOUSING), inclusive, and this Section, applicable within the Special District. Within such #Inclusionary Housing designated areas#, the #residential floor area ratio# may be increased by an Inclusionary Housing bonus, pursuant to the provisions of Sections 23-154 (Inclusionary Housing) ~~23-90, inclusive~~.

*  *  *

**97-43**
**Special Lot Coverage Regulations**

The maximum #lot coverage# for #residential use# in C6-3 Districts within the #Special 125th Street District# shall be 70 percent for #interior# or #through lots# and ~~80~~ 100 percent for #corner lots#.

~~Within the Special District, there shall be no maximum #lot coverage# applied to any #zoning lot# comprising a #corner lot# of 5,000 square feet or less.~~

**97-44**
**Special Height and Setback Regulations**

Within the #Special 125th Street District#, the underlying height and setback regulations shall be modified in accordance with the provisions of this Section, inclusive.

~~The provisions of paragraph (b) of Section 23-663 (Required rear setbacks for tall buildings in other districts) shall not be applicable within the Special District.~~

*  *  *

# Article IX - Special Purpose Districts

**Chapter 8**
**Special West Chelsea District**

**98-00**
**GENERAL PURPOSES**

The "Special West Chelsea District" established in this Resolution, is designed to promote and protect public health, safety, general welfare and amenity. These general goals include among others, the following specific purposes:

(a) to encourage and guide the development of West Chelsea as a dynamic mixed use neighborhood;

(b) to encourage the development of residential uses along appropriate avenues and streets;

(c) to encourage and support the growth of arts-related uses in West Chelsea;

(d) to facilitate the restoration and reuse of the High Line elevated rail line as an accessible, public open space through special height and setback regulations, High Line improvement bonuses and the transfer of development rights from the High Line Transfer Corridor;

(e) to ensure that the form and use of new buildings relates to and enhances neighborhood character and the High Line open space;

(f) to create and provide a transition to the lower-scale Chelsea Historic District to the east;

(g) to create and provide a transition to the Hudson Yards area to the north; and

(h) to promote the most desirable use of land in the area and thus to conserve the value of land and buildings, and thereby protect the City's tax revenues, consistent with the foregoing purposes.

* * *

**98-02**
**General Provisions**
The provisions of this Chapter shall apply to any #zoning lot#, or portion thereof, within the #Special West Chelsea District#, except that the provisions of Sections 98-11 (Special Regulations for Developments and Enlargements Above, Beneath or Adjacent to the High Line) and ~~98-17~~ 98-16 (Air Space over a Railroad or Transit Right-of-way or Yard) shall also apply to any #zoning lot# south of the #Special West Chelsea District# over which the #High Line# passes. The regulations of all other Chapters of this Resolution are applicable, except as superseded, supplemented or modified by the provisions of this Chapter. In the event of a conflict between the provisions of this Chapter and other regulations of this Resolution, the provisions of this Chapter shall control.

However, in #flood zones#, in the event of a conflict between the provisions of this Chapter and the provisions of Article VI, Chapter 4 (Special Regulations Applying in Flood Hazard Areas), the provisions of Article VI, Chapter 4, shall control.

* * *

**98-10**
**SPECIAL USE AND PARKING REGULATIONS WITHIN THE SPECIAL WEST CHELSEA DISTRICT**

* * *

**98-12**
**Modification of Use Regulations in C6 Districts**

* * *

**98-122**
**Location within buildings**
In any C6 District in the #Special West Chelsea District#, the provisions of Section 32-422 (Location of floors occupied by commercial uses) are modified to permit #commercial uses# ~~non-#residential uses#~~ on the same #story# as a #residential use# or on a #story# higher than that occupied by #residential uses#, provided that the #commercial uses# ~~non-#residential uses#~~:

(a) are located in a portion of the #building# that has separate direct access to the #street# with no access to the #residential# portion of the #building# at any #story#; and

(b) are not located directly over any portion of a #building# containing #dwelling units#, except this limitation shall not preclude the location of:

(1) #residential# lobby space below or on the same #story# as #commercial uses# ~~non-#residential uses#~~; or

(2) a #commercial use# that fronts on the #High Line# and is located within five feet of the level of the #High Line bed#.

* * *

~~**98-15**~~
~~**Security Gates**~~

~~All security gates installed after June 23, 2005, that are swung, drawn, or lowered to secure #commercial# or #community facility# premises shall, when closed, permit visibility of at least 75 percent of the façade area covered by such gate, when viewed from the #street#, except that this provision shall not apply to entrances or exits to parking facilities.~~

**~~98-16~~ <u>98-15</u>**
**Signs**

* * *

**~~98-17~~ <u>98-16</u>**
**Air Space Over a Railroad or Transit Right-of-way or Yard**

* * *

**~~98-18~~ <u>98-17</u>**
**Parking Regulations in Subarea H**

* * *

**~~98-19~~ <u>98-18</u>**
**Lighting**

* * *

**98-20**
**FLOOR AREA AND LOT COVERAGE REGULATIONS**

* * *

**98-22**
**Maximum Floor Area Ratio and Lot Coverage in Subareas**

For all #zoning lots#, or portions thereof, located in Subareas A through J, the maximum #floor area ratios#, #open space ratios# and #lot coverages# of the applicable underlying district shall not apply. In lieu thereof, the maximum #floor area ratio# permitted for #commercial#, #community facility# and #residential uses#, separately or in combination, shall be as specified in the table in this Section. For #residential use#, the maximum #lot coverage# shall be 70 percent for #interior# or #through lots# and ~~80 percent for #corner lots#, except that~~ no maximum #lot coverage# shall apply to any ~~#zoning lot# comprising a~~ #corner lot~~# of 5,000 square feet or less~~. For the #conversion# to #dwelling units# of non-#residential floor area# where the total #residential floor area# on the #zoning lot# will exceed the applicable basic maximum #floor area ratio# specified in the table in this

Section, such excess #residential floor area# shall only be permitted pursuant to Section 98-26 (Modifications of Inclusionary Housing Program).

*  *  *

**98-40**
**SPECIAL YARD, HEIGHT AND SETBACK, AND MINIMUM DISTANCE BETWEEN BUILDINGS REGULATIONS**

**98-41**
**Special Rear Yard Regulations**

The #yard# regulations of the underlying district shall apply, except as modified in this Section. In all districts, no #rear yard# regulations shall apply to any #zoning lot# that includes a #through lot# portion that is contiguous on one side to two #corner lot# portions and such #zoning lot# occupies the entire #block# frontage of the #street#. Where a #rear yard equivalent# is required by either Section 23-532 (Required rear yard equivalents) or Section 43-28 (Special Provisions for Through Lots), it shall be provided only as set forth in paragraph (a) of either Section, as applicable. However, in M1-5 Districts, a #building# existing prior to January 22, 2015, may be #enlarged# pursuant to Section 43-28, paragraph (b), provided that such #building# is on a #zoning lot# located entirely within 150 feet of the west side of the #High Line#. Where a #rear yard equivalent# is required by Section 23-533 (Required rear yard equivalents for Quality Housing buildings), the alternatives for #through lots# with a depth of 190 feet or less shall not apply.

**98-42**
**Special Height and Setback Regulations**

*  *  *

**98-423**
**Street wall location, minimum and maximum base heights and maximum building heights**

The provisions set forth in paragraph (a) of this Section shall apply to all #buildings or other structures#. Such provisions are modified for certain subareas as set forth in paragraphs (b) through (g) of this Section.

*  *  *

(a) For all #buildings#

(1) #Street wall# location provisions

On #wide streets#, and on #narrow streets# within 50 feet of their intersection with a #wide street#, the #street wall# shall be located on the #street line# and extend along such entire #street# frontage of the #zoning lot# up to at least the minimum base height specified in the table in this

Section. On #narrow street# frontages, beyond 50 feet of their intersection with a #wide street#, the #street wall# shall be located on the #street line# and extend along at least 70 percent of the #narrow street# frontage of the #zoning lot# up to at least the minimum base height specified in the table in this Section.

* * *

(2) Maximum #building# heights

(i) For C6-2A and C6-3A Districts

In C6-2A and C6-3A, the maximum base height, maximum #building# height and the maximum number of #stories# shall be as set forth in Section 23-662 (Maximum height of buildings and setback regulations) for the residential equivalent of an R8A and R9A District, respectively. For #developments# or #enlargements# providing #affordable independent residences for seniors#, where at least 20 percent of the #floor area# of the #zoning lot# is allocated to such #use#, such maximum heights and number of #stories# may be modified in accordance with the provisions of paragraph (a) of Section 23-664 for such districts' applicable residential equivalent. Separate maximum #building# heights are set forth within such Sections for #developments# or #enlargements# with #qualifying ground floors# and for those with #non-qualifying ground floors#, as defined in Section 23-662.

(ii) For all other districts

All portions of #buildings or other structures# that exceed the applicable maximum base height specified in the table in this Section shall provide a setback at a height not lower than the applicable minimum base height. A setback with a depth of at least 10 feet shall be provided from any #street wall# fronting on a #wide street#, and a setback with a depth of at least 15 feet shall be provided from any #street wall# fronting on a #narrow street#, except such dimensions may include the depth of permitted recesses in the #street wall#.

No #building or other structure# shall exceed the maximum #building# height specified in the table in this Section.

* * *

Minimum and Maximum Base Height and Maximum Building Height
by District or Subarea

| District or Subarea | Minimum Base Height (in feet) | Maximum Base Height (in feet) | Maximum #Building# Height |
|---|---|---|---|

| | | | | (in feet) |
|---|---|---|---|---|
| ~~C6-2A~~ | | ~~60~~ | ~~85~~ | ~~120~~ |
| ~~C6-3A~~ | | ~~60~~ | ~~102~~ | ~~145~~ |
| M1-5 | | 50 | 95 | 135 |
| Subarea A | within 50 feet of a #wide street# | 60 | 85 | ____ [1] |
| | between 50 and 100 feet of a #wide street# | 15 | 85 | ____ [1] |
| | for #zoning lots# with only #narrow street# frontage | 40 | 60 | ____ [1] |
| Subarea B | | 60 | 95 | 135 |
| Subarea C | for #zoning lots# with only #narrow street# frontage | 60 | 110 | 110 |
| | for #zoning lots# with Tenth Avenue frontage | 105[2] | 125[2] | 125[2] |
| | for #zoning lots# with Eleventh Avenue frontage | 125[2] | 145[2] | 145[2] |
| Subarea D | | 60 | 90 | 250[1] |
| Subarea E | | 60 | 105[3] | 120[3] |
| Subarea F | | 60[2] | 80[2] | 80[2] |
| Subarea G | for #zoning lots# with only #narrow street# frontage | 60 | 95 | 95 |
| | for #zoning lots# with #wide street# frontage | 105[2] | 120[2] | 120[2] |
| Subarea H | | 60[4] | 85[4] | ____ [4] |
| Subarea I | within 300 feet of Tenth Avenue between W. 16th St. & W. 17th St. | 60 | 85 | 120[5] |
| | all other areas | 60 | 105 | 135 |
| Subarea J | Midblock Zone | NA | 110[6] | 130[6] |
| | Ninth Avenue Zone | NA | 130[6] | 135[6] |
| | Tenth Avenue Zone | NA | 185[6] | 230[6] |

*  *  *

**98-50**

**SPECIAL HEIGHT AND SETBACK, OPEN AREA AND TRANSPARENCY REGULATIONS FOR ZONING LOTS ADJACENT TO THE HIGH LINE**

* * *

**98-53**
**Required Open Areas on the East Side of the High Line**

* * *

(a) Open area requirements

All required open areas shall:

* * *

(5) for open area screening, required open areas may be screened from the public areas of the #High Line# by a wall, fence, or plantings extending not higher than eight feet above the average elevation of the open area. All screening materials must be substantially transparent. For the purposes of this Section, substantially transparent screening is defined as transparent, or non-opaque, in an evenly distributed fashion for at least 75 percent of its area. Chain link fences and razor wire shall not be permitted. Vegetated screening, such as shrubs, vines and other plantings, may be opaque if completely covered by vegetation, provided that any underlying surface is substantially transparent.

In addition, such screening material shall be maintained in good condition at all times, may be interrupted by normal entrances and/or exits, and shall have no signs hung or attached thereto, other than those permitted in Section ~~98-16~~ 98-15.

* * *

**98-70**
**SUPPLEMENTAL REGULATIONS**

* * *

In addition, Section 93-90, paragraph (d)(3), is modified as follows:

No portion of the #low income housing# required under this Section shall qualify to:

(a) increase the #floor area ratio# pursuant to the provisions of the #Special West Chelsea District#, #Special Hudson Yards District#, #Special Garment Center District#, #Special Clinton District# or Section 23-154 ~~23-90~~; or

(b) satisfy an eligibility requirement of any real property tax abatement or exemption program with respect to any #multiple dwelling# that does not contain such #low income housing#.

* * *

**Appendix E**
**Special Regulations for Zoning Lots Utilizing the High Line Improvement Bonus and Located Partially Within Subareas D, E, G or I**

* * *

(b) Requirements for issuance of certificates of occupancy pursuant to paragraph (c) of Section 98-25:

* * *

(2) Stairway and Elevator Access Work pursuant to paragraph (c)(3) of Section 98-25:

* * *

(ii) The Stairway and Elevator Access Work shall consist of one stairway and one elevator located directly adjacent to or below the #High Line#. Except as approved by the Chairperson of the City Planning Commission pursuant to paragraph (a)(1)(iii) of this Appendix, #curb level# entrances to such access facilities must be located at the #street line#. Such access facilities shall be harmonious with the design of the #High Line# on the #zoning lot# and shall be visible and identifiable as #High Line# access facilities when viewed from Tenth Avenue. Such access facilities may be unenclosed or enclosed. When such access facilities are enclosed and located at the #street line#, any wall or façade separating the access facility from the #street# shall be substantially glazed and fully transparent from ground level to the full height of the access facility. Any wall or façade separating the access facility from the #High Line# shall be substantially glazed and fully transparent from the level of the #High Line bed# to the full height of the access facility. Stairways shall have a clear path of not less than six feet in width. Such access facilities shall be identified with signage placed at the #High Line# level and at street level that is consistent with guidelines specified in the signage plan as authorized by the City Planning Commission pursuant to the provisions of Section ~~98-16~~ 98-15.

* * *

# Article X - Special Purpose Districts

**Chapter 1**
**Special Downtown Brooklyn District**

**101-00**
**GENERAL PURPOSES**

The "Special Downtown Brooklyn District" established in this Resolution is designed to promote and protect public health, safety and general welfare. These general goals include, among others, the following specific purposes:

(a) to strengthen the business core of Downtown Brooklyn by improving the working and living environments;

(b) to foster development in Downtown Brooklyn and provide direction and incentives for further growth where appropriate;

(c) to create and provide a transition between the Downtown commercial core and the lower-scale residential communities of Fort Greene, Boerum Hill, Cobble Hill and Brooklyn Heights;

(d) to encourage the design of new buildings that are in character with the area;

(e) to preserve the historic architectural character of development along certain streets and avenues and the pedestrian orientation of ground floor uses, and thus safeguard the vitality of Downtown Brooklyn;

(f) to improve the quality of development in Downtown Brooklyn by fostering the provision of specified public amenities in appropriate locations;

(g) to improve visual amenity by establishing special sign regulations within the Fulton Mall and Atlantic Avenue Subdistricts; and

(h) to promote the most desirable use of land and building development for Downtown Brooklyn and thus conserve the value of land and buildings and thereby protect the City's tax revenues.

* * *

**101-10**
**SPECIAL USE REGULATIONS**

**101-11**
**Special Ground Floor Use Regulations**

Map 2 (Ground Floor Retail Frontage), in Appendix E of this Chapter, specifies locations where the special ground floor #use# regulations of this Section apply.

#Uses# within #stories# that have a floor level within five feet of #curb level#, and within 50 feet of the #street line#, shall be limited to #commercial uses# listed in Use Groups 5, 6A, 6C, 6D, 7A, 7B, 8A, 8B, 8D, 9, 10, 11, 12A, 12B and 12C, where such #uses# are permitted by the underlying district. In addition, libraries, museums and non-commercial art galleries shall be permitted. A #building's street# frontage shall be allocated exclusively to such #uses#, except for Type 2 lobby space, entryways or entrances to subway stations provided in accordance with the provisions of Section 37-33 (Maximum Width of Certain Uses). However, loading berths serving any permitted #use# in the #building# may occupy up to 40 feet of such #street# frontage provided such #street# frontage is not subject to curb cut restrictions as shown on Map 5 (Curb cut restrictions) in Appendix E of this Chapter.

~~In no event shall the length of #street# frontage occupied by lobby space or entryways exceed, in total, 30 feet or 50 percent of the #building's# total #street# frontage, whichever is less.~~

* * *

**101-12**
**Transparency Requirements**

Map 3 (Ground Floor Transparency Requirements) in Appendix E of this Chapter specifies locations where the following transparency requirements apply.

For any #buildings developed# after June 28, 2004, or portions of #buildings enlarged# on the ground floor level after June 28, 2004, each ground floor #street wall# shall be glazed in accordance with the provisions of Section 37-34 (Minimum Transparency Requirements).~~with transparent materials which may include #show windows#, glazed transoms or glazed portions of doors. Such glazed area shall occupy at least 50 percent of the area of each such ground floor #street wall#, measured to a height of 10 feet above the level of the adjoining sidewalk. Where such glazed area is required to occupy at least 70 percent of the area of the ground floor #street wall#, up to 20 percent of the area of the ground floor #street wall# may be glazed with translucent materials. #Show windows# shall have a sill height not more than 2 feet, 6 inches above #curb level#.~~

~~For all locations specified on Map 3 in Appendix E of this Chapter, security gates installed after June 28, 2004, that are swung, drawn or lowered to secure #commercial# or #community facility# premises shall, when closed, permit visibility of at least 75 percent of the area covered by such gate when viewed from the #street#.~~

* * *

**101-20**
**SPECIAL BULK REGULATIONS**

**101-21**
**Special Floor Area and Lot Coverage Regulations**

R7-1 C6-1 C6-4.5

(a) In R7-1 Districts

In R7-1 Districts, the #floor area ratio# and #open space ratio# provisions applicable to #residential buildings# and #residential# portions of #mixed buildings# pursuant to Sections 23-151 ~~23-142, 23-143~~ and 23-154 ~~23-144~~ shall not apply. In lieu thereof, the maximum #floor area ratio# for #residential buildings# or #residential# portions of #mixed buildings# shall be 4.0~~, except that for #non-profit residences for the elderly# the maximum #floor area ratio# shall be 5.01~~. The maximum #lot coverage# for #residential buildings# or #residential# portions of #mixed buildings# shall be 65 percent for #interior lots#, except that for #affordable independent residences for seniors# ~~#non-profit residences for the elderly#~~ the maximum #lot coverage# for #interior lots# shall be 70 percent. For all #residential buildings# or #residential# portions of #mixed buildings#, the maximum #lot coverage# for #corner lots# shall be 100 ~~80~~ percent.

(b) In C6-1 Districts

In C6-1 Districts, the #floor area ratio# and #open space ratio# provisions applicable to #residential buildings# and #residential# portions of #mixed buildings#, pursuant to Sections 23-151 ~~23-142, 23-143~~ and 23-154 ~~23-144~~, shall not apply. In lieu thereof, the maximum #floor area ratio# for #residential buildings# or #residential# portions of #mixed buildings# shall be 3.44~~, except that for #non-profit residences for the elderly#, the maximum #floor area ratio# shall be 5.01~~. The maximum #lot coverage# for #residential buildings# or #residential# portions of #mixed buildings# shall be 65 percent for #interior lots#, except that for #affordable independent residences for seniors# ~~#non-profit residences for the elderly#,~~ the maximum #lot coverage# for #interior lots# shall be 70 percent. For all #residential buildings# or #residential# portions of #mixed buildings#, the maximum #lot coverage# for #corner lots# shall be 100 ~~80~~ percent. For #Quality Housing buildings#, the underlying #floor area ratio# and #lot coverage# regulations shall apply.

(c) In C6-4.5 Districts

In C6-4.5 Districts, the maximum permitted #floor area ratio# for #commercial# or #community facility uses# shall be 12.0. No #floor area# bonuses for #commercial# or #community facility uses# shall be permitted.

* * *

**101-222**
**Standard height and setback regulations**

C2-4 / R7-1
C6-4.5
~~C5-4~~ C6-1 ~~C6-4~~

In the districts indicated, except C6-1A Districts, a #building or other structure# shall not exceed the applicable maximum #building# height set forth in the table in this Section. Furthermore, any portion of a #building or other structure# that exceeds the applicable maximum base height shall be set back at least 10 feet from a #wide street line# and at least 15 feet from a #narrow street line#.

MAXIMUM BASE HEIGHTS AND MAXIMUM BUILDING HEIGHTS
IN C2-4/R7-1, C5-4, C6-1 AND C6-4 DISTRICTS

| | Maximum Base Height | | Maximum #building# Height | |
|---|---|---|---|---|
| District | Beyond 100 feet of a #wide street# | Within 100 feet of a #wide street# | Beyond 100 feet of a #wide street# | Within 100 feet of a #wide street# |
| C2-4/R7-1 | 85 | 85 | 160 | 160 |
| ~~C5-4~~ C6-1 ~~C6-4~~ | 125 | 150 | 185 | 210 |
| C6-4.5 | 125 | 150 | 250 | 250 |

C5-4 C6-4

In the districts indicated, the maximum height of a #building or other structure# and the maximum number of #stories# shall be as set forth in Section 23-662 (Maximum height of buildings and setback regulations) for an R10 District. For #development# or #enlargements# providing either #affordable housing# pursuant to the Inclusionary Housing Program, as set forth in Section 23-90, inclusive, or #affordable independent residences for seniors#, where at least 20 percent of the #floor area# of the #zoning lot# is allocated to such #use#, such maximum heights and number of #stories# may be modified in accordance with the provisions of paragraph (a) of Section 23-664 for an R10 District. Separate maximum #building# heights are set forth within such Sections for #developments# or #enlargements# with #qualifying ground floors# and for those with #non-qualifying ground floors#, as defined in Section 23-662. Furthermore, any portion of a #building or other structure# that exceeds the applicable maximum base height shall be set back at least 10 feet from a #wide street line# and at least 15 feet

from a #narrow street line#.

*  *  *

**101-30**
**SPECIAL PROVISIONS WITHIN HEIGHT LIMITATION AREAS**

The provisions of this Section shall apply within the Flatbush Avenue Extension and Schermerhorn Street Height Limitation Areas, as shown on Map 6 in Appendix E of this Chapter.

*  *  *

(b) Schermerhorn Street Height Limitation Area

*  *  *

(3) #Rear yard# modification

The provisions of Section 23-532 (Required rear yard equivalents) or 23-533 (Required rear yard equivalents for Quality Housing buildings), as applicable, shall not apply to any #through lot#. In lieu thereof, an open area with a minimum depth of 60 feet, midway, or within 10 feet of being midway between the two #street lines# upon which such #through lot# fronts, shall be provided. Such #rear yard# shall be unobstructed from its lowest level to the sky, except as provided in Section 23-44 (Permitted Obstructions in Required Yards or Rear Yard Equivalents).

*  *  *

**101-50**
**OFF-STREET PARKING AND OFF-STREET LOADING REGULATIONS**

The provisions of Article II, Chapter 5, and Article III, Chapter 6 (ACCESSORY OFF-STREET PARKING AND LOADING REGULATIONS), shall apply, except ~~as modified in this Section, inclusive.~~
that the #accessory# parking requirements of Section 25-23 (Requirements Where Group Parking Facilities Are Provided) shall be modified to require #accessory# off-street parking spaces for at least 20 percent of the total number of new #dwelling units#. However, such modification shall not apply in R6B Districts.

~~**101-51**~~
~~**Minimum Parking Requirements**~~

~~The provisions of this Section shall apply to all districts within the #Special Downtown Brooklyn District#, except R6B Districts.~~

~~(a) The #accessory# parking requirements of Section 25-23 (Requirements Where Group Parking Facilities~~

~~Are Provided) shall be modified to require #accessory# off-street parking spaces for at least 20 percent of the total number of new #dwelling units#.~~

~~(b) There shall be no minimum parking requirement for #affordable housing units# as defined in Section 23-91, or for #dwelling units# eligible for reduced parking pursuant to Section 25-25 (Modification of Requirements for Public, Publicly-Assisted and Government-Assisted Housing or for Non-profit Residences for the Elderly).~~

* * *

**101-80**
**SPECIAL PERMITS**

**101-81**
**Special Permit for Use and Bulk Modifications for Cultural Use in Certain C6-2 Districts**

In order to support a concentration of cultural #uses# and public open spaces in the C6-2 District bounded by Flatbush Avenue, Hanson Place, St. Felix Street and Lafayette Avenue, for #buildings# intended to be occupied in whole or in part by cultural #uses#, the City Planning Commission may permit the maximum #community facility floor area ratio# to be increased from 6.5 to 7.0, may permit modifications of the special #street wall# location regulations of Section 101-41, and the height and setback regulations of Section 23-641 ~~23-632~~ as applied to the #residential# portion of a #building#, and modifications of applicable #sign# regulations in accordance with this Section.

* * *

# Article X - Special Purpose Districts

**Chapter 4**
**Special Manhattanville Mixed Use District**

**104-00**
**GENERAL PURPOSES**

The "Special Manhattanville Mixed Use District" established in this Resolution is designed to promote and protect public health, safety and general welfare. These general goals include, among others, the following specific purposes:

(a) encourage the development of a mixed use neighborhood that complements a revitalized community-oriented waterfront;

(b) support a variety of community facility, commercial and manufacturing uses;

(c) provide opportunities for the expansion of large academic, scientific and mixed use facilities in a manner that benefits the surrounding community;

(d) strengthen the retail and service character and economic vitality of the neighborhood by encouraging active ground floor uses along Broadway, West 125th Street and 12th Avenue;

(e) facilitate the maximum amount of design flexibility while fulfilling the goals of the mixed use district;

(f) improve the physical appearance of the streetscape by providing and coordinating harmonious open space, sidewalk amenities and landscaping within a consistent urban design;

(g) strengthen the visual corridors along West 125th Street and other east-west corridors that connect the community to the waterfront;

(h) expand local employment opportunities;

(i) recognize, preserve and promote the existing historic transportation infrastructure of the neighborhood;

(j) promote the most desirable use of land in this area and thus conserve the value of land and buildings, and thereby protect the City's tax revenues.

* * *

**104-10**
**SPECIAL USE REGULATIONS**

The #use# regulations of the underlying C6 Districts are modified in Sections 104-11 through 104-18, inclusive.

*  *  *

**104-12**
**Community Facility Use Modifications**

The #community facility use# regulations of the underlying C6-1 and M1-2 Districts are modified, as follows:

(a) in Subdistrict A, a #community facility use# with sleeping accommodations, as listed in this Section, may locate in the same #building#, or #abut# a #building# containing a #use# listed in Section 104-132 (Use Groups 16, 17 and 18), only in accordance with the certification provisions of Section 104-14:

College or school student dormitories or fraternity or sorority student houses

~~Domiciliary care facilities for adults~~

#Long-term care facilities#

Monasteries, convents or novitiates

Non-profit hospital staff dwellings without restriction as to location on the same #zoning lot#

Non-profit or voluntary hospitals and related facilities

~~Nursing homes and health-related facilities~~

Philanthropic or non-profit institutions with sleeping accommodations;

(b) in Subdistrict B, #uses# listed in Use Groups 3 and 4 permitted in the underlying M1-2 District, pursuant to Sections 42-10 (Uses Permitted As-of-Right) and 74-921 (Use Group 3A and 4A community facilities), shall be limited to 5,000 square feet of #floor area# per establishment.

*  *  *

**104-15**
**Ground Floor Use and Frontage Regulations**

For the purposes of this Section, ground floor level shall mean the floor of a #building#, the level of which is located at, or within five feet of, the finished level of the adjacent sidewalk, or the adjacent #mandatory widened sidewalk#, as applicable. In the locations specified on Map 6 (Ground Floor Use and Frontage) in Appendix A of this Chapter, the ground floor #use# and frontage regulations of this Section shall apply to any #development# or

change of #use# located on the ground floor level of a #building or other structure#, or any #enlargement# that increases the #floor area# of the ground floor level of a #building# by more than 25 percent.

A minimum of 75 percent of the length of a #street wall# on the ground floor level shall be limited to #uses# listed in Section 104-16 (Use Group MMU) and shall comply with the minimum depth provisions of Section 37-32 (Ground Floor Depth Requirements for Certain Uses) ~~measured to a depth of at least 30 feet from the #street wall#, or the depth of the #building#, whichever is less, shall be limited to #uses# listed in Section 104-16 (Use Group MMU)~~. Such #uses# shall be located at the #street wall#. In no event shall the length of #street# frontage occupied solely by lobby space or entryways exceed, in total, 40 feet.

* * *

**104-20**
**SPECIAL BULK REGULATIONS**

* * *

**104-21**
**Maximum Floor Area Ratio, Open Space Ratio and Lot Coverage for Residential Uses**

In Subdistricts A and C, the #bulk# regulations for #residential use# are modified in accordance with the provisions of this Section.

For all #zoning lots#, or portions thereof, the maximum #floor area ratio#, #open space ratio# and #lot coverage# regulations shall not apply. In lieu thereof, the provisions of this Section shall apply.

In Subdistrict A, the maximum #floor area ratio# for #residential use# shall be 3.44.

In Subdistrict C, the maximum #floor area ratio# for #residential use# shall be 6.02.

For #interior# or #through lots#, or portions thereof, the maximum #lot coverage# shall not exceed 70 percent. For #corner lots#, the maximum #lot coverage# shall be 100 percent. ~~shall not exceed 80 percent. However, there shall be no maximum #lot coverage# for any #zoning lot# comprising a #corner lot# of 5,000 square feet or less.~~

The provisions of Section 23-70 (MINIMUM REQUIRED DISTANCES BETWEEN TWO OR MORE BUILDINGS ON A SINGLE ZONING LOT) shall not apply.

* * *

**Appendix A**
**Special Manhattanville Mixed Use District Plan**

* * *

Map 5 - Parcel Designation and Maximum Building Heights

[TO BE REMOVED]

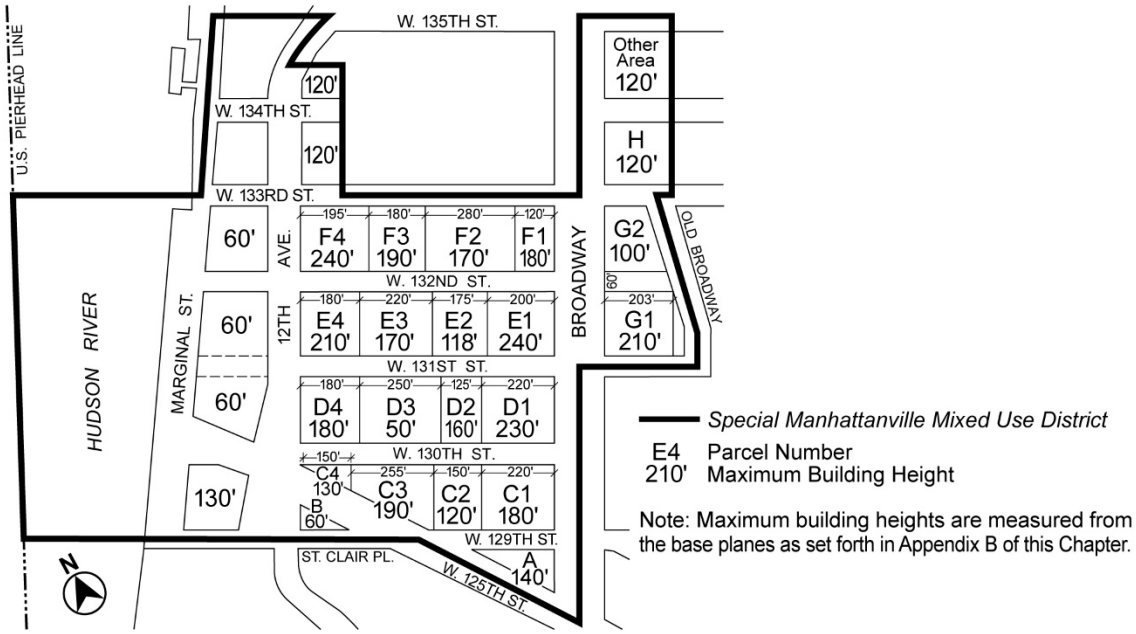

Map 5 - Parcel Designation and Maximum Building Heights

[TO BE ADDED]

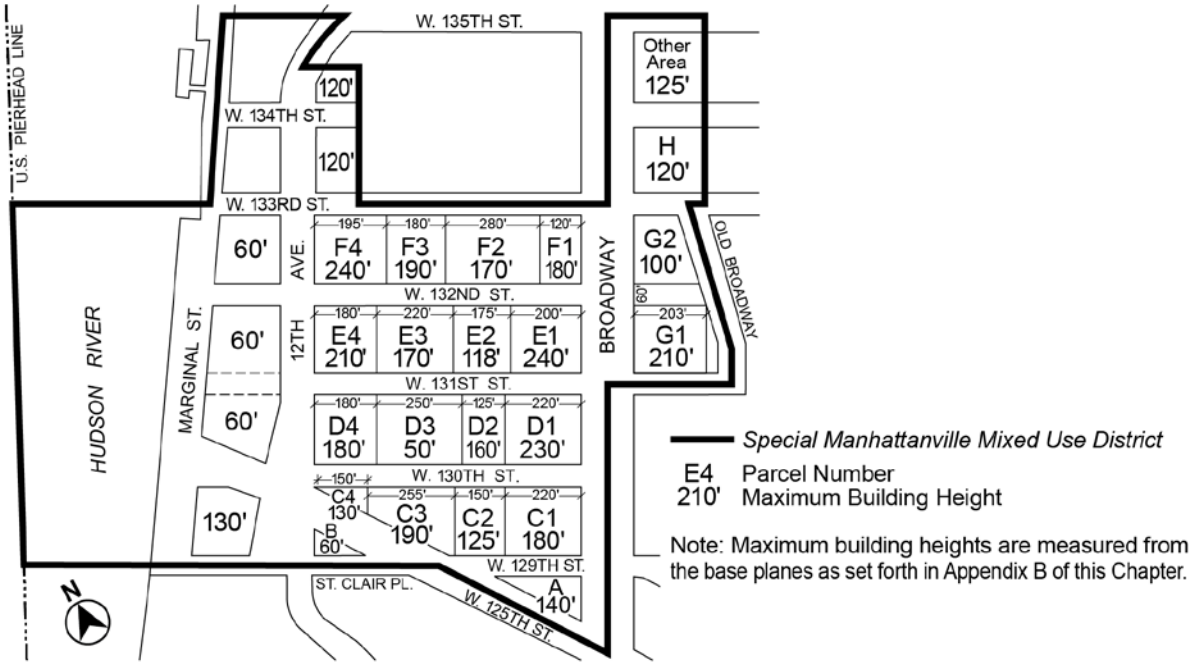

# Article X - Special Purpose Districts

**Chapter 5**
**Special Natural Area District**

**105-00**
**GENERAL PURPOSES**

The "Special Natural Area District" (hereinafter also referred to as the "Special District"), established in this Resolution, is designed to promote and protect public health, safety and general welfare. These general goals include, among others, the following specific purposes:

(a) to guide development in areas of outstanding natural beauty in order to protect, maintain and enhance the natural features of such areas;

(b) to preserve land having qualities of exceptional recreational or educational value to the public;

(c) to protect aquatic, biologic, botanic, geologic and topographic features having ecological and conservation values and functions;

(d) to reduce hillside erosion, landslides and excessive storm water runoff associated with development by conserving vegetation and protecting natural terrain;

(e) to preserve hillsides having unique aesthetic value to the public; and

(f) to promote the most desirable use of land and the direction of building development in accordance with a well-considered plan, to promote stability of residential development, to promote the character of the district and its peculiar suitability for particular uses, to conserve the value of land and buildings and thereby protect the City's tax revenues.

* * *

**105-90**
**FUTURE SUBDIVISION**

* * *

**105-94**
**Special Natural Area Districts Specified**

* * *

**105-944**
**Special Fort Totten Natural Area District-4**

(a) General purposes

* * *

(d) Special regulations

* * *

(2) Special height regulations

In order to preserve the unique character of the Special District and to protect the views of and to the water within the Special District, Section 23-631 (General Provisions ~~Height and setback in R1, R2, R3, R4 and R5 Districts~~) shall apply except that the maximum height for any #development# or #enlargement# shall be 32 feet or three #stories#, whichever is less.

* * *

# Article X - Special Purpose Districts

**Chapter 7**
**Special South Richmond Development District**

**107-00**
**GENERAL PURPOSES**

The "Special South Richmond Development District" established in this Resolution is designed to promote and protect public health, safety, general welfare and amenity. These general goals include, among others, the following purposes:

(a) to guide future development in accordance with the Land Use Plan for South Richmond and the Capital Improvement Plan for the Special District area;

(b) to promote balanced land use and development of future land uses and housing in the Special District area, including private and public improvements such as schools, transportation, water, sewers, drainage, utilities, open space and recreational facilities, on a schedule consistent with the City's Capital Improvement Plan and thereby provide public services and facilities in the most efficient and economic manner, and to ensure the availability of essential public services and facilities for new development within the area;

(c) to avoid destruction of irreplaceable natural and recreational resources such as lakes, ponds, watercourses, beaches and natural vegetation and to maintain the natural ecological balance of the area with minimum disruption of natural topography, trees, lakes and other natural features; and

(d) to promote the most desirable use of land in the South Richmond area and thus to conserve the value of land and buildings and thereby protect the City's tax revenues.

* * *

**107-40**
**SPECIAL USE, BULK AND PARKING REGULATIONS**

**107-41**
**Type of Residence**

* * *

**107-411**
**Affordable independent residences for seniors ~~Non-profit residences for the elderly~~ in Area SH**

In Area SH, as shown on the District Plan (Map 4 in Appendix A) of this Chapter, any #development# or #enlargement# comprised of #affordable independent residences for seniors# ~~#non-profit residences for the elderly#~~ shall be permitted upon certification of the Chairperson of the City Planning Commission that:

(a) such #development# or #enlargement# will contain not more than 250 #dwelling units# of #affordable independent residences for seniors# ~~#non-profit residences for the elderly#~~, individually or in combination with other #developments# or #enlargements# within Area SH that have received prior certification pursuant to this Section;

(b) a site plan has been submitted showing a detailed plan demonstrating compliance with the provisions of this Chapter; and

(c) such #residences# comply with the #use# and #bulk# regulations of R3-2 Districts, except that the maximum #floor area ratio#, maximum #lot coverage# and minimum required #open space# shall be as set forth for R3-2 Districts in Section 23-142 ~~23-141~~ (Open space and floor area regulations in R1 and R2 Districts with a letter suffix as well as R3 through R5 Districts ~~Open space and floor area regulations in R1, R2, R3, R4 or R5 Districts~~), as modified by this Chapter. The provisions of Section 23-144 ~~23-147~~ (Affordable independent residences for seniors) ~~(For non-profit residences for the elderly)~~ shall not apply.

Any #development# or #enlargement# that results in a total of more than 250 #dwelling units# of #affordable independent residences for seniors# ~~#non-profit residences for the elderly#~~ in Area SH shall be permitted only upon authorization of the City Planning Commission, pursuant to Section 107-672 (In Area SH).

**107-412**
**Special bulk regulations for certain community facility uses in lower density growth management areas**

The #bulk# regulations of this Chapter applicable to #residential buildings# shall apply to all #zoning lots# in #lower density growth management areas# containing #buildings# used for:

(a) ambulatory diagnostic or treatment health care facilities, as listed in Section 22-14 (Use Group 4), except where such #zoning lot# contains #buildings# used for hospitals or #long-term care facilities# ~~nursing homes~~ as defined in the New York State Hospital Code; or

(b) child care services as listed under the definition of #school# in Section 12-10 (DEFINITIONS), except where such #zoning lot# contains #buildings# used for houses of worship or, for #zoning lots# that do not contain #buildings# used for houses of worship, where the amount of #floor area# used for child care services is equal to 25 percent or less of the amount of # floor area# permitted for #community facility use# on the #zoning lot#.

* * *

**107-42**
**Minimum Lot Area and Lot Width for Residences**

* * *

**107-421**
**Minimum lot area and lot width for zoning lots containing certain community facility uses**

In R1, R2, R3A, R3X, R3-1, R4A and R4-1 Districts, the provisions of this Section shall apply to #zoning lots# containing #buildings# used for:

(a) ambulatory diagnostic or treatment health care facilities, as listed in Section 22-14 (Use Group 4), except where such #zoning lot# contains #buildings# used for hospitals or #long-term care facilities# ~~nursing homes~~ as defined in the New York State Hospital Code; and

* * *

**107-60**
**AUTHORIZATIONS**

* * *

**107-67**
**Uses and Bulk Permitted in Certain Areas**

* * *

**107-672**
**In Area SH**

The City Planning Commission may authorize #developments# that will result in more than 250 #dwelling units# of #affordable independent residences for seniors# ~~#non-profit residences for the elderly#~~ in Area SH, as shown on the District Plan (Map 4 in Appendix A), provided such #developments# comply with the #use# and #bulk# regulations of R3-2 Districts, except that the maximum #floor area ratio#, maximum #lot coverage# and minimum required #open space# shall be as set forth for R3-2 Districts in Section 23-142~~1~~ (Open space and floor area regulations in R1~~,~~ and R2~~,~~ Districts with a letter suffix as well as R3~~, R4 and~~ through R5 Districts), as modified by this Chapter. The provisions of Section 23-144~~7~~ (Affordable independent residences for seniors ~~For non-profit residences for the elderly~~) shall not apply.

* * *

# Article X - Special Purpose Districts

**Chapter 9**
**Special Little Italy District**

**109-00**
**GENERAL PURPOSES**

The "Special Little Italy District" established in this Resolution is designed to promote and protect public health, general welfare and amenity. These general goals include, among others, the following specific purposes:

(a) to preserve and strengthen the historical and cultural character of the community;

(b) to protect the scale of storefronts and character of the existing retail uses along Mulberry Street and other major shopping streets so that Little Italy will remain a unique regional shopping area, and thereby strengthen the economic base of the City;

(c) to preserve the vitality of street life by reducing conflict between pedestrian and vehicular traffic;

(d) to permit rehabilitation and new development consistent with the residential character and scale of the existing buildings in the area;

(e) to provide amenities, such as public open space, and street trees, to improve the physical environment;

(f) to discourage the demolition of noteworthy buildings which are significant to the character of the area; and

(g) to promote the more desirable use of land in the area and thus to preserve the value of land and buildings, and thereby protect and strengthen the City's tax revenues, consistent with the foregoing purposes.

* * *

**109-02**
**General Provisions**

In harmony with the general purposes and intent of this Resolution and the general purposes of the #Special Little Italy District# and in accordance with the provisions of this Chapter, certain specified regulations of the districts on which the #Special Little Italy District# are superimposed are made inapplicable, and special regulations are substituted therefore in this Chapter.

Except as modified by the express provisions of this Special District, the regulations of the underlying zoning district remain in effect. For the purposes of this Chapter, the provisions of Sections 23-15 ~~23-14~~, 23-20 and 33-

13 are made inapplicable.

* * *

**109-10**
**PRESERVATION AREA (Area A)**

The provisions of this Section shall apply within Area A (Preservation Area) as shown on the District Plan (Appendix A).

* * *

**109-12**
**Bulk Regulations**

* * *

**109-122**
**Lot coverage, through lot and rear yard regulations**

Within Area A, the maximum #lot coverage# for a #zoning lot# shall not exceed the following percentages:

| Lot Type | Maximum #Lot Coverage# (in percent) |
|---|---|
| #Corner lot# | 100 ~~70~~ |
| #Interior lot# | 60 |
| #Through lot#, except as provided below | 60 |

* * *

**109-30**
**HOUSTON STREET CORRIDOR (Area B)**

The provisions of this Section are applicable within Area B, as shown on the District Plan (Appendix A).

* * *

**109-32**
**Bulk Regulations**

The #bulk# regulations of the underlying district shall apply to the Houston Street Corridor (Area B), except as set forth in this Section.

* * *

**109-322**
**Lot coverage regulations**

For any #zoning lot# within Area B, the maximum #lot coverage# shall not exceed the following percentages:

| Lot Type | Maximum #Lot Coverage# (in percent) |
|---|---|
| #Corner lot# | 100 ~~80~~ |
| #Interior# or #through lot# | 70 |

* * *

**109-37**
**Noise Attenuation**

For any #residential# or #commercial use# in a #development# within Area B:

(a) window wall attenuation of 35 dB(A) for #residential uses# or 30 dB(A) for #commercial uses#, shall be provided. However, upon application to the Office of Environmental Remediation (OER) by the owner of the affected #building#, consistent with its authority under the provisions of Section 11-15 (Environmental Requirements) with respect to (E) designations, OER may modify the requirements of this Section, based upon new information, additional facts or updated standards, as applicable, provided that such modification is equally protective. In such instances, OER shall provide the Department of Buildings with notice of such modification, stating that it does not object to the issuance of a building permit, or temporary or final certificate of occupancy; and

(b) alternative means of ventilation shall be provided, such as, but not limited to, central air conditioning or the provision of air conditioning sleeves, with such alternative means to conform to the provisions of Sections 27-752 to 27-756 of the Building Code of the City of New York.

* * *

# Article XI - Special Purpose Districts

**Chapter 1**
**Special Tribeca Mixed Use District**

**111-00**
**GENERAL PURPOSES**

The "Special Tribeca Mixed Use District" established in this Resolution is designed to promote and protect public health, safety, and general welfare. These general goals include, among others, the following specific purposes:

(a) to retain adequate wage, job producing, stable industries within the Tribeca neighborhood;

(b) to protect light manufacturing and to encourage stability and growth in the Tribeca neighborhood by permitting light manufacturing and controlled residential uses to coexist where such uses are deemed compatible;

(c) to provide housing opportunity of a type and at a density appropriate to this mixed use zone;

(d) to ensure the provision of safe and sanitary housing units in converted buildings; and

(e) to promote the most desirable use of land and building development in accordance with the Plan for Lower Manhattan as adopted by the City Planning Commission.

* * *

**111-10**
**SPECIAL USE REGULATIONS**

* * *

**111-13**
**Additional Use Regulations**

* * *

(e) Environmental conditions for Area A2

(1) All #developments# or #enlargements# shall be subject to Ambient Noise Quality Zone Regulations*. #Uses# listed in Use Group 11A shall be subject to the performance standards of an M1 District.

(2) All new #dwelling units# shall be provided with a minimum 35dB(A) of window wall attenuation in order to maintain an interior noise level of 45dB(A), or less, with windows closed. Therefore, an alternate means of ventilation is required. However, upon application to the Office of Environmental Remediation (OER) by the owner of the affected #building#, consistent with its authority under the provisions of Section 11-15 (Environmental Requirements) with respect to (E) designations, OER may modify the requirements of this Section, based upon new information, additional facts or updated standards, as applicable, provided that such modification is equally protective. In such instances, OER shall provide the Department of Buildings with notice of such modification, stating that it does not object to the issuance of a building permit, or temporary or final certificate of occupancy.

* Ambient Noise Quality Regulations for an M2 District as set forth in the Noise Control Code for the City of New York, Article VI(B)

**111-20**
**SPECIAL BULK PROVISIONS FOR AREAS A1 THROUGH A7**

* * *

(b) Area A2

The underlying regulations applicable to a C6-3 District shall apply to #developments# and #enlargements#, except as set forth herein.

* * *

(1~~2~~) #Open space# and #lot coverage# regulations

The #open space# and #lot coverage# regulations of Article II, Chapters 3 and 4, and Article III, Chapter 5, for a #residential building#, or the #residential# portion of a #mixed building#, are not applicable. In lieu thereof, the maximum permitted #lot coverage# on ~~a #zoning~~ interior lots# and #through lots# shall not exceed 80 percent of the #lot area#. The maximum permitted #lot coverage# on #corner lots# shall be 100 percent of the #lot area#. However, any permitted obstruction on a #zoning lot# pursuant to Sections 23-44, 24-12 or 33-23 shall not count as #lot coverage#.

(3) #Yard#, #court# and minimum distance between #buildings# regulations

The #yard# and #court# regulations of a C6-3 District shall apply, except that on a #through lot# the provisions of paragraphs (b) and (c) of Sections 23-532 ~~23-533~~ and 24-382 (Required rear

yard equivalents) and 23-71 (Minimum Distance between Buildings on a Single Zoning Lot) shall not apply. On any single #zoning lot# within Area A2, if a #development# or #enlargement# results in two or more #buildings# or portions of #buildings# detached from one another at any level, such #buildings# or portions of #buildings# shall at no point be less than eight feet apart.

* * *

(c) Area A3

The regulations applicable to a C6-3A District shall apply to #developments# and #enlargements#, except as set forth herein.

(1) Height and setback regulations

The height and setback regulations of Section 35-65 (Height and Setback Requirements for Quality Housing Buildings) ~~24 (Special Street Wall Location and Height and Setback Regulations in Certain Districts)~~ shall not apply. In lieu thereof, the following height and setback regulations shall apply:

* * *

(d) Area A4, A5, A6 and A7

* * *

(4) Applicability of Inclusionary Housing Program

R8A Districts within Area A6 shall be #Inclusionary Housing designated areas#, pursuant to Section 12-10 (DEFINITIONS), for the purpose of making the Inclusionary Housing Program regulations of Section 23-90, inclusive, applicable as modified within the Special District. The base #floor area ratio# for any #zoning lot# containing #residences# shall be 5.4. Such base #floor area ratio# may be increased to a maximum of 7.2 through the provision of #affordable housing# pursuant to the provisions for #Inclusionary Housing designated areas# in Section 23-90, except that the height and setback regulations of Section 23-664 ~~23-954 (Height and setback for compensated developments in Inclusionary Housing designated areas)~~ shall not apply. In lieu thereof, the height and setback regulations of this Chapter shall apply.

* * *

**111-40**
**REQUIREMENTS FOR LOFT DWELLINGS CONSTRUCTED PRIOR TO OCTOBER 13, 2010**

The following is applicable to all existing #loft dwellings#, created prior to October 13, 2010, within the #Special Tribeca Mixed Use District#.

(a) All #loft dwellings# shall have one or more windows which open into a #street# or a #yard# with a minimum depth of 30 feet.

(b) (1) The minimum #floor area# contained within a #loft dwelling# shall be not less than 2,000 square feet, except that:

* * *

(2) The minimum #loft dwelling# size and #yard# requirement may be replaced by the requirements of Section 15-02~~6~~4 (Special bulk regulations for certain pre-existing dwelling units, joint living-work quarters for artists and loft dwellings) for #loft dwellings#:

* * *

No #building# that meets the density requirements of paragraph (c) of this Section may subsequently add additional units or quarters except in accordance thereof. No #building# to which the regulations of Section 15-02~~6~~4 have been applied may subsequently add additional units or quarters except in accordance with the requirements of paragraph (c).

* * *

# Article XI - Special Purpose Districts

**Chapter 2**
**Special City Island District**

**112-00**
**GENERAL PURPOSES**

The "Special City Island District" established in this Resolution is designed to promote and protect public health, safety, general welfare and amenity. These general goals include, among others, the following specific purposes:

(a) to promote and strengthen the unique character of the Special City Island District for nautical and waterfront activities by limiting permitted uses to those which complement and enhance the existing character of the Special District;

(b) to maintain the existing low-rise residential and commercial character of the district by regulating the height of buildings;

(c) to maintain and protect the environmental quality and "village" character of City Island Avenue by imposing special controls on building setbacks and signs; and

(d) to promote the most desirable use of land in this area and thus to conserve the value of land and thereby protect the City's tax revenue.

* * *

**112-07**
**Special Use Regulations**

* * *

**112-074**
**Ground floor use restrictions on certain blocks**

For all #buildings# fronting on City Island Avenue between Bay Street and Carroll Street, only non-#residential uses# shall be permitted on the ground floor level or within #stories# that have a floor level within five feet of #curb level#, except for ~~#residential#~~ Type 1 lobbies provided in accordance with 37-33 (Maximum Width of Certain Uses).

* * *

**112-10**
**SPECIAL BULK REGULATIONS**

*  *  *

**112-104**
**Special transparency requirements along City Island Avenue**

For #buildings# with ground floor #commercial# or #community facility uses# fronting upon City Island Avenue, the provisions of ~~this~~ Section 37-34 (Minimum Transparency Requirements) shall apply to any #street wall# of such #building# facing City Island Avenue. ~~At least 50 percent of the total surface area of such wall between #curb level# and 12 feet above #curb level#, or to the ceiling of the ground floor, whichever is less, or to the full height of the wall if such wall is less than 12 feet in height, shall be transparent. The lowest point of any transparency that is provided to satisfy this requirement shall not be higher than two feet, six inches above #curb level#.~~

~~In addition, solid security gates that are swung, drawn or lowered to secure #commercial# or #community facility uses# shall be prohibited. All security gates installed after September 30, 2003, shall, when closed, permit visibility of at least 75 percent of the area covered by such gate when viewed from the #street#.~~

*  *  *

**112-11**
**Special Parking Regulations**

*  *  *

**112-112**
**Accessory parking and floor area requirements for eating or drinking establishments**

*  *  *

For eating or drinking establishments, the provisions of Sections 36-23 or 44-23 (Waiver of Requirements for Spaces below Minimum Number) or Sections 52-41 (General Provisions) with respect only to #enlargements# or #extensions# to provide off-street parking spaces, 73-43 (Reduction of Parking Spaces ~~for Houses of Worship or Places of Assembly~~) and 73-45 (Modification of Off-Site Parking Provisions) are hereby made inapplicable. For eating or drinking establishments with frontage on City Island Avenue, if less than 15 #accessory# off-street parking spaces are required, all such parking spaces shall be waived.

*  *  *

# Article XI - Special Purpose Districts

**Chapter 3**
**Special Ocean Parkway District**

**113-00**
**GENERAL PURPOSES**

The "Special Ocean Parkway District" established in this Resolution is designed to promote and protect public health, safety, general welfare and amenity. These general goals include among others the following specific purposes:

(a) to promote and strengthen the scenic landmark designation of Ocean Parkway by requiring landscaping along Ocean Parkway;

(b) to maintain the existing scale and character of the community by limiting the bulk of permitted community facilities;

(c) to protect the environmental quality of and improve circulation within the District by requiring enclosed parking for all uses along Ocean Parkway and by requiring off-street loading for certain community facilities throughout the District; and

(d) to promote the most desirable use of land in this area and thus to conserve the value of land and thereby protect the City's tax revenue.

* * *

**113-50**
**THE SUBDISTRICT**

* * *

**113-503**
**Special bulk regulations**

For #single-# and #two-family detached# and #semi-detached residences#, and for #zoning lots# containing both #community facility# and #residential uses#, certain underlying district #bulk# regulations are set forth in Article II, Chapter 3 (Bulk Regulations for Residential Buildings in Residence Districts), except as superseded by those set forth in Sections 113-51 through 113-55, inclusive. The regulations applicable to a #predominantly built-up area# shall not apply in the Subdistrict.

For #community facility buildings#, the #bulk# regulations of Article II, Chapter 3, are superseded by those set forth in Sections 113-51 (Maximum Permitted Floor Area Ratio), 113-542 (Minimum required front yards), 113-

543 (Minimum required side yards), 113-544 (Minimum required rear yards) and 113-55 (Height and Setback Regulations). The provisions of Sections 24-01 (Applicability of this Chapter), 24-012 ~~24-011~~ (Exceptions to the bulk regulations of this Chapter), paragraph (a), and 24-04 (Modification of Bulk Regulations in Certain Districts), pertaining to R4-1 Districts, shall not apply in the Subdistrict.

* * *

**113-52**
**Density Regulations**

The regulations set forth in Section 23-22 (Maximum Number of Dwelling Units~~ or Rooming Units~~) pertaining to R4-1 Districts shall apply.

* * *

**113-54**
**Yard Regulations**

* * *

**113-544**
**Minimum required rear yards**

One #rear yard# with a depth of not less than 20 feet shall be provided on any #zoning lot# except a #corner lot#. The provisions of Section 23-52 (Special Provisions for Shallow Interior Lots) shall be inapplicable. The provisions of Section 23-53 (Special Provisions for Through Lots) pertaining to R4 Districts shall apply except that the provisions in Section ~~23-533~~ 23-532 (Required rear yard equivalents) shall be modified to require 40 feet instead of 60 feet in paragraph (a), or 20 feet instead of 30 feet in paragraphs (b) and (c).

* * *

**113-55**
**Height and Setback Regulations**

The height and setback regulations of a #building or other structure# in the Subdistrict shall be those ~~as set forth~~ applicable to R4A Districts in Section 23-631 (General provisions)~~, for #buildings or other structures# in R4A Districts~~, except that paragraph (b)(2) shall be modified as follows:

> Each perimeter wall of the #building or other structure# may have one or more apex points directly above it on the 35 foot high plane. (See Section 23-631, Figure B).

* * *

# Article XI - Special Purpose Districts

**Chapter 5**
**Special Downtown Jamaica District**

**115-00**
**GENERAL PURPOSES**

The "Special Downtown Jamaica District" established in this Resolution is designed to promote and protect the public health, safety and general welfare of the Downtown Jamaica community. These general goals include, among others, the following specific purposes, to:

(a) strengthen the business core of Downtown Jamaica by improving the working and living environments;

(b) foster development in Downtown Jamaica and provide direction and incentives for further growth where appropriate;

(c) encourage the development of affordable housing;

(d) expand the retail, entertainment and commercial character of the area around the transit center and to enhance the area’s role as a major transportation hub in the City;

(e) provide transitions between the downtown commercial core, the lower-scale residential communities and the transportation hub;

(f) improve the quality of development in Downtown Jamaica by requiring the provision of specified public amenities in appropriate locations;

(g) encourage the design of new buildings that are in character with the area;

(h) enhance the pedestrian environment by relieving sidewalk congestion and providing pedestrian amenities; and

(i) promote the most desirable use of land and thus conserve and enhance the value of land and buildings, and thereby protect the City's tax revenues.

* * *

**115-10**
**SPECIAL USE REGULATIONS**

*  *  *

**115-13**
**Ground Floor Use, Frontage and Major Building Entrance Regulations in C4-5X and C6 Districts**

On designated #streets#, as shown on Map 2 (Ground Floor Use and Transparency and Curb Cut Restrictions) in Appendix A of this Chapter, the special ground floor #use#, frontage and major #building# entrance regulations of this Section shall apply to any #building or other structure# fronting on such #streets#.

#Uses# within #stories# on the ground floor or with a floor level within five feet of the level of the adjoining sidewalk, ~~and within 30 feet of the #street line#,~~ shall be limited to #community facility uses# without sleeping accommodations~~,~~ as listed in Section 115-15 (Modification of Use Regulations in M1-4 Districts), and #uses# listed in Use Groups 5, 6A, 6B, 6C, 6D, 7A, 7B, 8A, 8B, 8D, 9, 10, 11, 12A, 12B and 12C. A #building's street# frontage shall be allocated exclusively to such #uses#, except for Type 2 lobby space, entryways or entrances to subway stations provided in accordance with 37-33 (Minimum Width of Certain Uses). Such non-#residential uses# shall comply with the minimum depth provisions of Section 37-32 (Ground Floor Depth Requirements for Certain Uses).

~~In no event shall the length of #street# frontage occupied by lobby space, entrance space and/or a #building# entrance recess exceed, in total, 30 feet, or 50 percent of the #building's# total #street# frontage, whichever is less.~~

For #buildings developed# or #enlarged# after September 10, 2007, where the ground floor of such #development# or #enlarged# portion of the #building# fronts upon such designated #street#, such #development# or #enlargement# shall provide a major #building# entrance onto such #street#. However, #developments# or #enlargements# on #zoning lots# with frontage on more than one designated #street#, may provide a major #building# entrance on only one designated #street#.

**115-14**
**Transparency Requirement in C4-5X and C6 Districts**

For #buildings developed# or #enlarged# after September 10, 2007, where the ground floor of such #development# or #enlarged# portion of the #building# fronts upon designated #streets# as shown on Map 2 (Ground Floor Use and Transparency and Curb Cut Restrictions) in Appendix A of this Chapter, each ground floor #street wall# shall be glazed in accordance with 37-34 (Minimum Transparency Requirements) ~~with transparent materials which may include #show windows#, glazed transoms or glazed portions of doors. Such glazed area shall occupy at least 50 percent of the area of each such ground floor #street wall#, measured to a height of 10 feet above the level of the adjoining sidewalk~~.

*  *  *

**115-20**
**SPECIAL BULK REGULATIONS**

**115-21**
**Floor Area Ratio, Open Space and Lot Coverage**

* * *

(c) #Lot coverage#

In C4 and C6 Districts, for #residential buildings# or the #residential# portion of a #mixed building#, the maximum #lot coverage# shall be 100 ~~80~~ percent on a #corner lot# and 70 percent on an #interior# or #through lot#. ~~However, no #lot coverage# provisions shall apply to any #zoning lot# comprising an entire #block# or to any #zoning lot# comprising a #corner lot# of 5,000 square feet or less.~~

**115-211**
**Special Inclusionary Housing regulations**

* * *

(b) Maximum #floor area ratio#

The maximum #floor area ratio# for any #zoning lot# containing a #residential use# shall not exceed the base #floor area ratio# set forth in the table in this Section, except that such base #floor area ratio# may be increased to the maximum #floor area ratio#, set forth in Section 23-154 ~~952~~ (Inclusionary Housing), through the provision of #affordable housing#, pursuant to the provisions relating to #Inclusionary Housing designated areas# in Section 23-90, inclusive.

* * *

(d) Height and setback

The height and setback regulations of ~~paragraph (a) of~~ Section 23-664 ~~954~~ (Modified height and setback regulations for certain buildings) shall not apply. In lieu thereof, the special height and setback regulations of Section 115-23, inclusive, of this Chapter shall apply.

* * *

**115-23**
**Height and Setback Regulations**

* * *

**115-233**
**Street wall height**

C4 C6

Except in the locations indicated on Map 4 (Street Wall Height) in Appendix A of this Chapter, the minimum and maximum heights before setback of a #street wall# required pursuant to Section 115-232 (Street wall location), shall be as set forth in the following table:

| District | Minimum #Street Wall# Height | Maximum #Street Wall# Height |
|---|---|---|
| C4-4A | 40 feet | ~~65~~ 75 feet |
| C4-5X | 40 feet | ~~85~~ 95 feet |
| C6 | 40 feet | 60 feet |

Any portion of a #building# that exceeds the maximum height of a #street wall# shall be set back at least 10 feet from a #wide street line# and at least 15 feet from a #narrow street line#.

In the locations indicated on Map 4, required #street walls# shall rise without setback to the minimum height specified for that location on Map 4 or the height of the #building#, whichever is less. Any portion of a #building# that exceeds the maximum #street wall# height specified for that location shall be set back at least 10 feet from a #wide street line# and at least 15 feet from a #narrow street line#.

However, in the locations indicated on Map 4 where no maximum #street wall# height or setback is required, #street walls# required pursuant to Section 115-232 shall rise without setback to a minimum height of 40 feet or the height of the #building#, whichever is less. Above a height of 40 feet, no setbacks are required for any portion of the #building#.

**115-234**
**Maximum building height**

C4 C6

In C4-4A and C4-5X Districts, the maximum height of a #building or other structure# and the maximum number of #stories# shall be as set forth in Section 23-662 (Maximum height of buildings and setback regulations) for the applicable residential equivalent set forth in the tables in Section 35-23 (Residential Bulk Regulations in Other C1 or C2 Districts or in C3, C4, C5 or C6 Districts). For #developments# or #enlargements# providing either #affordable housing# pursuant to the Inclusionary Housing Program, as set forth in Section 23-90, inclusive, or #affordable independent residences for seniors#, where at least 20 percent of the #floor area# of the #zoning lot# is allocated to such #use#, such maximum heights and number of #stories# may be modified in accordance with the provisions of paragraph (a) of Section 23-664 for such districts' applicable residential equivalent. Separate maximum #building# heights are set forth within such Sections for #developments# or #enlargements# with #qualifying ground floors# and for those with #non-qualifying ground floors#, as defined in Section 23-662. ~~no #building or other structure# shall exceed a height of 80 feet~~.

~~In C4-5X Districts, no #building or other structure# shall exceed a height of 125 feet~~.

In C6-2 and C6-3 Districts, no #building or other structure# shall exceed a height of 250 feet. In C6-4 Districts, no #building or other structure# shall exceed a height of 290 feet. However, no maximum #building# height limitation shall apply on Block 9993, shown on Map 5 (Maximum Building Height) in Appendix A of this Chapter, if such #block# is #developed# or if a #building# on such #block# is #enlarged#, pursuant to the Jamaica Gateway Urban Renewal Plan.

* * *

**115-30**
**MANDATORY IMPROVEMENTS**

* * *

**115-32**
**Refuse Storage, Recreation Space and Planting Areas**

All #buildings# containing #residences# shall provide refuse storage space, recreation space and planting areas in accordance with the provisions of Sections 28-12 ~~28-23~~ (Refuse Storage and Disposal) and 28-20 ~~28-30~~ (RECREATION SPACE AND PLANTING AREAS), whether or not they are #Quality Housing buildings#.

* * *

# Article XI – Special Purpose Districts

**Chapter 6**
**Special Stapleton Waterfront District**

**116-00**
**GENERAL PURPOSES**

The "Special Stapleton Waterfront District" established in this Resolution is designed to promote and protect public health, safety and general welfare. These general goals include among others, the following specific purposes:

(a) encourage design of development that is in character with the neighborhood and surrounding community;

(b) maintain and reestablish physical and visual public access to and along the waterfront;

(c) strengthen the traditional town center of Stapleton by allowing the development of residential and commercial uses;

(d) encourage the creation of a lively and attractive environment that will provide daily amenities and services for the use and enjoyment of the working population and the new residents;

(e) take maximum advantage of the beauty of the New York Harbor waterfront, thereby best serving the business community, the residential population and providing regional recreation; and

(f) promote the most desirable use of land and thus conserve and enhance the value of land and buildings, and thereby protect City tax revenues.

* * *

**116-10**
**SPECIAL USE REGULATIONS**

Within the #Special Stapleton Waterfront District#, the following special #use# regulations shall apply. The #use# regulations of the underlying C4-2A District shall be modified by Sections 116-101 through 116-13, inclusive.

* * *

**116-12**
**Mandatory Ground Floor Use and Frontage Requirements**

The provisions of Section 32-433 (Ground floor use in C1, C2 and C4 Districts in the Borough of Staten Island) shall not apply in the #Special Stapleton Waterfront District#. However, on designated #streets# and #mandatory

front building wall lines# in Subareas B3 and C, as shown on Map 2 in the Appendix to this Chapter, the special ground floor #use# and frontage regulations of this Section shall apply to any #building developed# or #enlarged# after October 25, 2006.

#Uses# located on the ground floor level~~,~~ or within two feet of the as-built level of the adjoining sidewalk~~,~~ shall be exclusively limited to the permitted non-#residential uses# ~~permitted by the underlying district regulations,~~ as modified by the special #use# provisions of this Chapter. ~~A #building's# ground floor frontage shall be allocated exclusively to such #uses#, and shall have a depth of at least 30 feet from the #street wall# of the #building# and~~ Such ground floor #uses# shall extend along the entire width of the #building#, except for lobbies or entrances to #accessory# parking spaces, and shall have a depth provided in accordance with Section 37-32 (Ground Floor Depth Requirements for Certain Uses).

In no event shall lobbies and entrances to #accessory# parking spaces occupy more than 50 percent of the #building's# total frontage along such #street# or #mandatory front building wall line#, or 35 feet, whichever is less. However, the total length of such frontage occupied by such lobbies and entrances need not be less than 25 feet.

**116-13**
**Transparency Requirements**

Within the #Special Stapleton Waterfront District#, the transparency requirements of ~~this~~ Section 37-34 (Minimum Transparency Requirements) shall apply to any #development# or an #enlargement# where the #enlarged# portion of the ground floor of the #building# is within eight feet of the #street line# and where non-#residential uses# are located on the ground floor level or within two feet of the as-built level of the adjoining sidewalk.

~~At least 50 percent of a #building's# front #building# wall surface shall be glazed and transparent at the ground floor level. For the purpose of the glazing requirements, the #building's street wall# surface at the ground floor level shall be measured from the floor to the height of the ceiling or 14 feet above grade, whichever is less. The lowest point of any transparency that is provided to satisfy the requirements of this Section shall not be higher than four feet above the as-built level of the adjoining sidewalk.~~

**116-20**
**SPECIAL BULK REGULATIONS**

The special #bulk# regulations of this Section shall apply within the #Special Stapleton Waterfront District#.

* * *

**116-23**
**Special Height and Setback Regulations**

The special height and setback regulations set forth in this Section shall apply.

*  *  *

**116-233**
**Maximum building height**

Within the #Special Stapleton Waterfront District#, the maximum height of a #building or other structure# with a #non-qualifying ground floor#, as defined in Section 23-662 (Maximum height of buildings and setback regulations), shall not exceed 50 feet, and the maximum height of a #building or other structure# with a #qualifying ground floor#, as defined in Section 23-662, shall not exceed 55 feet. ~~except~~ However, in Subarea B2, ~~where~~ the maximum height of a #building or other structure# shall not exceed 60 feet.

*  *  *

# Article XI - Special Purpose Districts

**Chapter 7**
**Special Long Island City Mixed Use District**

**117-00**
**GENERAL PURPOSES**

The "Special Long Island City Mixed Use District" established in this Resolution is designed to promote and protect the public health, safety and general welfare of the Long Island City community. These general goals include, among others, the following specific purposes:

(a) support the continuing growth of a mixed residential, commercial and industrial neighborhoods by permitting expansion and development of residential, commercial, community facility and light manufacturing uses where adequate environmental standards are assured;

(b) encourage the development of moderate to high density commercial uses within a compact transit-oriented area;

(c) strengthen traditional retail streets in Hunters Point by allowing the development of new residential and retail uses;

(d) encourage the development of affordable housing;

(e) promote the opportunity for people to work in the vicinity of their residences;

(f) retain jobs within New York City;

(g) provide an opportunity for the improvement of Long Island City; and

(h) promote the most desirable use of land and thus conserve the value of land and buildings and thereby protect City tax revenues.

* * *

**117-02**
**General Provisions**

In harmony with the general purposes and content of this Resolution and the general purposes of the #Special Long Island City Mixed Use District#, the regulations of this Chapter shall apply within the #Special Long Island

City Mixed Use District#. The regulations of all other Chapters of this Resolution are applicable, except as modified, supplemented or superseded by the provisions of this Chapter. In the event of a conflict between the provisions of this Chapter and other regulations of this Resolution, the provisions of this Chapter shall control. However, in #flood zones#, in the event of a conflict between the provisions of this Chapter and the provisions of Article VI, Chapter 4 (Special Regulations Applying in Flood Hazard Areas), the provisions of Article VI, Chapter 4, shall control.

* * *

(b) For #mixed use buildings#, #dwelling units# ~~or #rooming units#~~ shall be located on a #story# or #stories# above the highest #story# occupied, in whole or in part, by a #commercial# or # manufacturing use# ~~non-#residential use#~~. #Commercial# or #manufacturing uses# ~~Non-#residential uses#~~ may, however, be located on the same #story#, or on a #story# higher than that occupied by #dwelling units# or ~~#rooming units#~~, provided that the #commercial# or #manufacturing uses#: ~~non-#residential uses#:~~

(1) are located in a portion of the #mixed use building# that has separate direct access to the #street# with no access to the #residential# portion of the #building# at any #story#; and

(2) are not located directly over any portion of the #building# containing #dwelling units# ~~or #rooming units#~~.

* * *

**117-50**
**QUEENS PLAZA SUBDISTRICT**

* * *

**117-51**
**Queens Plaza Subdistrict Special Use Regulations**

* * *

**117-512**
**Ground floor use and frontage regulations**

On designated #streets# in the Queens Plaza Subdistrict, as shown on Map 2 in Appendix C of this Chapter, the special ground floor #use# and frontage regulations of this Section shall apply to any #building or other structure# fronting on such #streets#.

#Uses# within #stories# on the ground floor or with a floor level within five feet of #curb level# shall be limited exclusively to permitted #commercial#, #manufacturing# or #community facility uses# ~~permitted by the designated district regulations except~~ as modified by the special #use# provisions of Sections 117-51 and 117-511~~. A #building's# ground floor frontage shall be allocated exclusively to such #uses#~~, except for lobby space or

entrance space.

In no event shall the length of #street# frontage occupied by lobby space, entrance space and/or a #building# entrance recess exceed in total 50 percent of the #building's# total #street# frontage or 30 feet, whichever is less. However, the total length of #street# frontage occupied by lobby space and/or entrance space need not be less than 25 feet.

* * *

**117-513**
**Transparency requirement**

Within the Queens Plaza Subdistrict, the transparency requirements of ~~this~~ Section 37-34 (Minimum Transparency Requirements) shall apply to all #developments# and to #enlargements# where the #enlarged# portion of the ground floor of the #building# is within eight feet of the #street line#. ~~Transparency requirements shall not apply to any #building# where the ground floor is occupied by #uses# listed in Use Groups 16 or 17.~~ However, the provisions establishing the maximum width of ground floor level #street wall# without transparency shall not apply. In lieu thereof, any portion of such #building# wall that is 50 feet or more in length and contains no transparent element between #curb level# and 14 feet above #curb level# or the ceiling of the ground floor, whichever is higher, or to its full height if such wall is less than 14 feet in height, shall be covered with vines or similar planting or contain artwork or be treated so as to provide visual relief. Plantings shall be planted in soil having a depth of not less than 2 feet, 6 inches, and a minimum width of 24 inches.

The transparency requirements of this Section shall not apply to any #building# where the ground floor is occupied by #uses# listed in Use Groups 16 or 17.

~~At least 50 percent of a #building's street wall# surface shall be glazed and transparent at the ground floor level. For the purpose of the glazing requirements, the #building's street wall# surface at the ground floor level shall be measured from the floor to the height of the ceiling or 14 feet above grade, whichever is less. The lowest point at any point of any transparency that is provided to satisfy the requirements of this Section shall not be higher than four feet above #curb level#. Door or window openings within such walls shall be considered as transparent. Such openings shall have a minimum width of two feet.~~

~~In addition, the remaining portion of such #building# wall that is 50 feet or more in length and contains no transparent element between #curb level# and 14 feet above #curb level# or the ceiling of the ground floor, whichever is higher, or to its full height if such wall is less than 14 feet in height, shall be covered with vines or similar planting or contain artwork or be treated so as to provide visual relief. Plantings shall be planted in soil having a depth of not less than 2 feet, 6 inches, and a minimum width of 24 inches.~~

* * *

**117-52**
**Queens Plaza Subdistrict Special Bulk Regulations**

*  *  *

**117-523**
**Lot coverage and open space ratio requirements**

(a) #Lot coverage# requirements for #residential buildings#

In the Queens Plaza Subdistrict, where the designated #Residence District# is an R7 or R9 District, the provisions of Sections 23-151~~42~~ (Basic regulations for R6 through R9 Districts ~~In R6, R7, R8 or R9 Districts) through 23-144, inclusive,~~ regulating minimum required #open space ratios# and maximum #floor area ratios#, shall not apply. In lieu thereof, all #residential buildings#, regardless of whether they are required to be #Quality Housing buildings#, shall comply with the #lot coverage# requirements set forth for the designated district in Section 23-153~~45~~ (For Quality Housing buildings). ~~, or~~ Section 23-14~~7 for #non-profit residences for the elderly#. For purposes of this Section, #non-profit residences for the elderly# in R7 Districts without a letter suffix, shall comply with the provisions for R7A Districts, as set forth in Section 23-147.~~

Where the designated district is an R7-3 District, the maximum #lot coverage# shall be 70 percent on an #interior# or #through lot# and 100 ~~80~~ percent on a #corner lot#.

(b) #Lot coverage# and #open space ratio# requirements for #mixed use buildings#

#Lot coverage# and #open space ratio# requirements shall not apply to any portion of a #mixed use building# in the Queens Plaza Subdistrict.

*  *  *

**117-55**
**Mandatory Plan Elements for the Queens Plaza Subdistrict**

**117-552**
**Central refuse storage area**

The provisions of Section ~~28-23~~ 28-12 (Refuse Storage and Disposal) shall apply.

*  *  *

**117-60**
**DUTCH KILLS SUBDISTRICT**

In the #Special Long Island City Mixed Use District#, the special regulations of Sections 117-60 through 117-64, inclusive, shall apply within the Dutch Kills Subdistrict.

* * *

**117-63**
**Special Bulk Regulations in the Designated Districts**

* * *

**117-631**
**Floor area ratio and lot coverage modifications**

* * *

(b) Maximum #floor area ratio# and #lot coverage# for #residential uses#

* * *

(2) M1-3/R7X designated district

(i) Inclusionary Housing Program

* * *

(ii) Maximum #floor area ratio#

Within such #Inclusionary Housing designated area#, the maximum #floor area ratio# for any #zoning lot# containing a #residential use# shall not exceed the base #floor area ratio# of 3.75, except that such base #floor area ratio# may be increased to the maximum #floor area ratio# of 5.0, as set forth in Section 23-154 ~~952~~ (Inclusionary Housing), through the provision of #affordable housing#, pursuant to the provisions relating to #Inclusionary Housing designated areas# in Section 23-90.

* * *

**117-634**
**Maximum building height for mixed use buildings in designated R5 Districts**

The provisions regarding the maximum height of #mixed use buildings# within 25 feet of a #street line#, as set

forth in Section 123-661 (Mixed use buildings in Special Mixed Use Districts with R3, R4 or R5 District designations), shall be modified in the Dutch Kills Subdistrict, where the designated Residence District is an R5 District, as follows:

(a) in designated R5B Districts, no #building or other structure# shall exceed a height of 33 feet within 25 feet of a #street line#;

(b) in designated R5D Districts, no #building or other structure# shall exceed a height of ~~40~~ 45 feet within 25 feet of a #street line#.

* * *

# Article XI - Special Purpose Districts

**Chapter 8**
**Special Union Square District**

**118-00**
**GENERAL PURPOSES**

The "Special Union Square District" established in this Resolution is designated to promote and protect public health, safety, general welfare and amenity. These general goals include, among others, the following specific purposes:

(a) to promote a revitalized mixed-use area around Union Square by encouraging controlled development on vacant and under-utilized sites within the District;

(b) to stimulate such growth while providing guidelines which will ensure urban design compatibility between new development, existing buildings and Union Square and which will preserve and enhance the special character of the Square;

(c) to stabilize the area through residential development and thereby encourage active utilization of Union Square Park;

(d) to enhance the retail and service nature and economic vitality of 14th Street by mandating appropriate retail and service activities;

(e) to improve the physical appearance and amenity of the streets within the District by establishing streetscape and signage controls which are compatible to Union Square Park;

(f) to improve access, visibility, security and pedestrian circulation in and around the 14th Street/Union Square Station; and

(g) to promote the most desirable use of land in this area and thus conserve the value of land and buildings and thereby protect the City's tax revenues.

* * *

**118-10**
**USE REGULATIONS**

* * *

**118-12**
**Sign Regulations**

On #street walls# fronting on 14th Street, no #sign# may be located more than 25 feet above #curb level#.

#Signs# on #street walls# fronting on all other #streets# within the Special District shall be subject to the provisions of paragraph (e) of Section 32-345 (Ground floor use in High Density Commercial Districts) ~~37-36 (Sign Regulations)~~.

#Flashing signs# are not permitted within the Special District.

**118-20**
**BULK REGULATIONS**

**118-21**
**Floor Area Regulations**

The maximum #floor area ratio# permitted on property bounded by:

* * *

(b) Broadway, a line midway between East 13th Street and East 14th Street, south prolongation of the center line of Irving Place and Irving Place, East 15th Street, Union Square East, Fourth Avenue, and East 14th Street is 10.0, except as provided in Section ~~118-70~~ 118-60 (SUBWAY STATION IMPROVEMENTS WITHIN THE SPECIAL UNION SQUARE DISTRICT).

In no event, shall the commercial #floor area ratio# exceed 6.0.

* * *

**118-22**
**Residential Density Regulations**

The density regulations of Section 23-2~~3~~0 (DENSITY REGULATIONS) shall not apply. Instead, for every 750 square feet of #residential floor area# permitted on a #zoning lot#, there shall be no more than one #dwelling unit#.

However, the conversion of non-#residential buildings# to #residential use# shall be subject to the provisions of Article I, Chapter 5 (Residential Conversion of Existing Non-Residential Buildings).

* * *

**118-30**
**STREET WALL, HEIGHT AND SETBACK REGULATIONS**

The location and height above #curb level# of the #street wall# of any #development# or #enlargement# shall be as shown in the District Plan (Appendix A). However, if a #development# or #enlargement# is adjacent to one or more existing #buildings# fronting on the same #street line#, the #street wall# of such #development# or #enlargement# shall be located neither closer to nor further from the #street line# than the front wall of the adjacent #building# which is closest to the same #street line#.

#Street wall# recesses are permitted below the level of the second #story# ceiling for subway stair entrances required under Section 118-50 ~~118-60~~ (OFF STREET RELOCATION OF A SUBWAY STAIR WITHIN THE SPECIAL UNION SQUARE DISTRICT). Such recesses shall be no longer than 15 feet and no deeper than eight feet or the width or length of the relocated subway stair, whichever is greater.

* * *

**118-40**
**ENTRANCE AND STREET WALL TRANSPARENCY REQUIREMENTS**

All #developments# and #enlargements# that front on 14th Street, Union Square East, Union Square West and 17th Street shall be subject to the requirements set forth below.

* * *

**118-43**
**Street Wall Transparency**

When the #street wall# of any #development# or #enlargement# is located on 14th Street, Union Square East, Union Square West or 17th Street, ~~at least 50 percent of the total surface area of~~ such #street wall# shall be glazed in accordance with the provisions of Section 37-34 (Minimum Transparency Requirements) ~~transparent between #curb level# and 12 feet above #curb level# or the ceiling of the ground floor, whichever is higher. Such transparency must begin not higher than four feet above #curb level#~~.

~~**118-50**~~
~~**ADDITIONAL REQUIREMENTS**~~

~~**118-51**~~
~~**Double Glazed Windows**~~

~~All new #dwelling units# in #developments#, #enlargements# or changes of #use# shall be required to have double glazing on all windows and shall provide alternate means of ventilation.~~

~~**118-60**~~
**118-50**
**OFF-STREET RELOCATION OF A SUBWAY STAIR WITHIN THE SPECIAL UNION SQUARE DISTRICT**

*  *  *

**~~118-70~~**
**118-60**
**SUBWAY STATION IMPROVEMENTS WITHIN THE SPECIAL UNION SQUARE DISTRICT**

*  *  *

# Article XI - Special Purpose Districts

**Chapter 9**
**Special Hillsides Preservation District**

**119-00**
**GENERAL PURPOSES**

The "Special Hillsides Preservation District" (hereinafter also referred to as the "Special District") established in this Resolution is designed to promote and protect public health, safety and general welfare. These general goals include, among others, the following special purposes:

(a) to reduce hillside erosion, landslides and excessive storm water runoff associated with development by conserving vegetation and protecting natural terrain;

(b) to preserve hillsides having unique aesthetic value to the public;

(c) to guide development in areas of outstanding natural beauty in order to protect, maintain and enhance the natural features of such areas; and

(d) to promote the most desirable use of land and to guide future development in accordance with a comprehensive development plan, and to protect the neighborhood character of the district.

* * *

**119-20**
**PROVISIONS REGULATING TIER II SITES**

* * *

**119-21**
**Tier II Requirements**

**119-211**
**Lot coverage, floor area and density regulations**

The area of a #private road# shall be excluded from the area of the #zoning lot# for the purposes of applying the applicable requirements of Sections 23-14 (Open Space and Floor Area Regulations in R1 through R5 Districts ~~Minimum Required Open Space, Open Space Ratio, Maximum Lot Coverage and Maximum Floor Area Ratio~~) or Section 23-15 (Open Space and Floor Area Regulations in R6 through R10 Districts) as modified by this Section, and Sections 23-21 (Required Floor Area per Dwelling Unit ~~or Floor Area per Rooming Unit~~) and 33-10 (FLOOR

AREA REGULATIONS). For the purposes of this Section, the area of the #private road# shall include the area of the paved roadbed plus a seven-foot wide area adjacent to and along the entire length of the required curbs.

The maximum permitted percentage of #lot coverage# on a #zoning lot# shall be determined by Table I or Table II of this Section, as applicable.

* * *

**119-212**
**Height and setback regulations**

The height and setback regulations set forth in Sections 23-63 ~~631~~ ( Height and setback in R1 Through R5 Districts ~~R1, R2, R3, R4 and R5 Districts~~), 23-64 ~~632~~ (Basic Height and Setback Requirements ~~Front setbacks in districts where front yards are not required~~), 34-24 (Modification of Height and Setback Regulations), ~~and~~ 35-62~~1~~ (~~Height and Setback Regulations~~ Commercial Districts with an R1 through R5 Residential Equivalents) and 35-63 (Basic Height and Setback Modifications) shall not apply to #buildings or other structures# on #Tier II sites# within the #Special Hillsides Preservation District#. In lieu thereof, the height and setback regulations set forth in this Section shall apply.

No portion of a #building or other structure# shall penetrate a plane drawn parallel to the #base plane# at a height that is shown in Table III of this Section. For #buildings# with pitched roofs, height shall be measured to the midpoint of such pitched roof. For the purposes of this Section, the #base plane#, which is a plane from which the height of a #building or other structure# is measured in R2X, R3, R4 and R5 Districts, shall also be established in accordance with the provisions of Section 12-10 (DEFINITIONS) for #buildings or other structures# in R1, R2 and R6 Districts.

TABLE III
MAXIMUM HEIGHT OF A BUILDING OR OTHER STRUCTURE

| #Residence District#* | Maximum Height above #Base Plane# |
|---|---|
| R1 R2 R3 R4** | 36 feet |
| R5** | 60 feet |
| R6 | 70 feet |

---

* or #Residence District# equivalent when the #zoning lot# is located within a #Commercial District#

** #buildings# that utilize the regulations of Section 23-14~~1~~3, applying to a #predominantly built-up area#, shall not exceed a maximum height of 32 feet above the #base plane#.

* * *

# Article XII - Special Purpose Districts

**Chapter 1**
**Special Garment Center District**

**121-00**
**GENERAL PURPOSES**

The "Special Garment Center District" established in this Resolution is designed to promote and protect public health, safety, and general welfare. These general goals include, among others, the following specific purposes:

(a) to retain adequate wage and job producing industries within the Garment Center;

(b) to preserve apparel production and showroom space in designated areas of the Garment Center;

(c) to limit conversion of manufacturing space to office use in designated areas of the Garment Center;

(d) to recognize the unique character of the western edge of the Special District as integral to the adjacent #Special Hudson Yards District#;

(e) to establish an appropriate visual character for wide streets within the Garment Center; and

(f) to promote the most desirable use of land within the district, to conserve the value of land and buildings, and thereby protect the City's tax revenues.

* * *

**121-30**
**SPECIAL BULK REGULATIONS WITHIN PRESERVATION AREA P-2**

The following special #bulk# regulations shall apply within Preservation Area P-2, as shown in Appendix A of this Chapter.

* * *

**121-32**
**Height of Street Walls and Maximum Building Height**

(a) Height of #street walls#

* * *

(b) Maximum #building# height

Above a height of 90 feet or the height of the adjacent #street wall# if higher than 90 feet, no portion of a #building or other structure# shall penetrate a #sky exposure plane# that begins at a height of 90 feet above the #street line#, or the height of the adjacent #street wall# if higher than 90 feet, and rises over the #zoning lot# at a slope of four feet of vertical distance for each foot of horizontal distance to a maximum height limit of 250 feet, except as provided below:

(1) any portion of the #building or other structure developed# or #enlarged# pursuant to the tower regulations of Sections 33-45 (Tower Regulations) or 35-64~~3~~ (Special Tower Regulations for Mixed Buildings), as applicable, may penetrate the #sky exposure plane#, provided no portion of such #building or other structure# exceeds the height limit of 250 feet; and

* * *

# Article XII - Special Purpose Districts

**Chapter 3**
**Special Mixed Use District**

**123-00**
**GENERAL PURPOSES**

The "Special Mixed Use District" regulations established in this Chapter of the Resolution are designed to promote and protect public health, safety and general welfare. These general goals include, among others, the following specific purposes:

(a) to encourage investment in mixed residential and industrial neighborhoods by permitting expansion and new development of a wide variety of uses in a manner ensuring the health and safety of people using the area;

(b) to promote the opportunity for workers to live in the vicinity of their work;

(c) to create new opportunities for mixed use neighborhoods;

(d) to recognize and enhance the vitality and character of existing and potential mixed use neighborhoods; and

(e) to promote the most desirable use of land in accordance with a well-considered plan and thus conserve the value of land and buildings and thereby protect City tax revenues.

* * *

**123-20**
**SPECIAL USE REGULATIONS**

* * *

**123-21**
**Modification of Use Groups 2, 3 and 4**

The #uses# listed in Use Group 2, and the following #uses# listed in Use Groups 3 and 4: college or school student dormitories and fraternity or sorority student houses, #long-term care facilities#, ~~domiciliary care facilities for adults, nursing homes and health-related facilities,~~ philanthropic or non-profit institutions with sleeping accommodations, monasteries, convents or novitiates, #non-profit hospital staff dwellings# without restriction on location, and non-profit or voluntary hospitals, may only locate in the same #building# as, or share a common wall with a #building# containing, an existing #manufacturing# or #commercial use#, upon certification by a

licensed architect or engineer to the Department of Buildings that such #manufacturing# or #commercial use#:

(a) does not have a New York City or New York State environmental rating of "A", "B" or "C" under Section 24-153 of the New York City Administrative Code for any process equipment requiring a New York City Department of Environmental Protection operating certificate or New York State Department of Environmental Conservation state facility permit; and

(b) is not required, under the City Right-to-Know Law, to file a Risk Management Plan for Extremely Hazardous Substances.

* * *

**123-30**
**SUPPLEMENTARY USE REGULATIONS**

**123-31**
**Provisions Regulating Location of Uses in Mixed Use Buildings**

In #Special Mixed Use Districts#, in any #building# or portion of a #building# occupied by #residential uses#, #commercial# or #manufacturing uses# ~~non-#residential uses#~~ may be located only on a #story# below the lowest #story# occupied by #dwelling units# ~~or #rooming units#~~, except that this limitation shall not preclude the:

(a) extension of a permitted #business sign#, #accessory# to such non-#residential use#, to a maximum height of two feet above the level of a finished floor of the second #story#, but in no event higher than six inches below the lowest window sill on the second #story#;

(b) location of #commercial# or #manufacturing uses# ~~non-#residential uses#~~ on the same #story#, or on a #story# higher than that occupied by #dwelling units# ~~or #rooming units#~~, in #buildings# in existence on or prior to December 10, 1997, that are partially #converted# to #residential use# pursuant to paragraph (a) of Section 123-67 (Residential Conversion), or were previously so #converted# pursuant to Article I, Chapter 5 (Residential Conversion within Existing Buildings); or

(c) location of #commercial# or #manufacturing uses# ~~non-#residential uses#~~ on the same #story#, or on a #story# higher than that occupied by #dwelling units# ~~or #rooming units#~~, provided that the #commercial# or #manufacturing uses# ~~non-#residential uses#~~:

(1) are located in a portion of the #mixed use building# that has separate direct access to the #street# with no access to the #residential# portion of the #building# at any #story#; and

(2) are not located directly over any portion of a #building# containing #dwelling units# ~~or #rooming units#~~.

**123-32**
**Environmental Conditions**

In #Special Mixed Use Districts#, all new #dwelling units# shall be provided with a minimum 35dB(A) of window wall attenuation to maintain an interior noise level of 45dB(A) or less, with windows closed, and shall provide an alternate means of ventilation. However, upon application to the Office of Environmental Remediation (OER) by the owner of the affected #building#, consistent with its authority under the provisions of Section 11-15 (Environmental Requirements) with respect to (E) designations, OER may modify the requirements of this Section, based upon new information, additional facts or updated standards, as applicable, provided that such modification is equally protective. In such instances, OER shall provide the Department of Buildings with notice of such modification, stating that it does not object to the issuance of a building permit, or temporary or final certificate of occupancy.

* * *

**123-60**
**SPECIAL BULK REGULATIONS**

* * *

**123-63**
**Maximum Floor Area Ratio and Lot Coverage Requirements for Zoning Lots Containing Only Residential Buildings in R6, R7, R8 and R9 Districts**

Where the designated #Residence District# is an R6, R7, R8 or R9 District, the minimum required #open space ratio# and maximum #floor area ratio# provisions of Section 23-151~~142~~ (Basic regulations for R6 through R9 Districts)~~, 23-143 and paragraph (a) of Section 23-147~~ shall not apply. In lieu thereof, all #residential buildings#, regardless of whether they are required to be #developed# or #enlarged# pursuant to the Quality Housing Program, shall comply with the maximum #floor area ratio# and #lot coverage# requirements set forth for the designated district in Section 23-153~~45~~ (For Quality Housing buildings), or ~~paragraph (b) of~~ Section 23-155~~47~~ (Affordable independent residences for seniors), as applicable. ~~for #non-profit residences for the elderly#. For purposes of this Section, #non-profit residences for the elderly# in R6 and R7 Districts without a letter suffix, shall comply with the provisions for R6A or R7A Districts, respectively, as set forth in paragraph (b) of Section 23-147~~.

Where the designated district is an R7-3 District, the maximum #floor area ratio# shall be 5.0 and the maximum #lot coverage# shall be 70 percent on an #interior# or #through lot# and 100 ~~80~~ percent on a #corner lot#.

Where the designated district is an R9-1 District, the maximum #floor area ratio# shall be 9.0, and the maximum #lot coverage# shall be 70 percent on an #interior# or #through lot# and 100 ~~80~~ percent on a #corner lot#.

The provisions of this Section shall not apply on #waterfront blocks#, as defined in Section 62-11. In lieu thereof, the applicable maximum #floor area ratio# and #lot coverage# requirements set forth for #residential uses# in

Section 62-30 (SPECIAL BULK REGULATIONS) through 62-32 (Maximum Floor Area Ratio and Lot Coverage on Waterfront Blocks), inclusive, shall apply.

However, in #Inclusionary Housing designated areas#, as listed in the table in this Section, the maximum permitted #floor area ratio# shall be as set forth in Section 23-154~~952~~ (Inclusionary Housing). The locations of such districts are specified in APPENDIX F of this Resolution.

* * *

**123-64**
**Maximum Floor Area Ratio and Lot Coverage Requirements for Zoning Lots Containing Mixed Use Buildings**

For #zoning lots# containing #mixed use buildings#, the following provisions shall apply.

(a) Maximum #floor area ratio#

* * *

(3) #Residential uses#

Where the #Residence District# designation is an R3, R4 or R5 District, the maximum #floor area ratio# permitted for #residential uses# shall be the applicable maximum #floor area ratio# permitted for #residential uses# under the provisions of Section~~s~~ 23-14, inclusive, ~~and 23-141,~~ in accordance with the designated #Residence District#.

Where the #Residence District# designation is an R6, R7, R8, R9 or R10 District, the maximum #floor area ratio# permitted for #residential uses# shall be the applicable maximum #floor area ratio# permitted for #residential uses# under the provisions of Section 123-63, in accordance with the designated #Residence District#.

(4) Maximum #floor area# in #mixed use buildings#

The maximum total #floor area# in a #mixed use building# shall be the maximum #floor area# permitted for either the #commercial#, #manufacturing#, #community facility# or #residential use#, as set forth in this Section, whichever permits the greatest amount of #floor area#.

However, in #Inclusionary Housing designated areas#, except within Waterfront Access Plan BK-1, the maximum #floor area ratio# permitted for #zoning lots# containing #residential# and #commercial#, #community facility# or #manufacturing uses# shall be the base #floor area ratio# set forth in Section 23-154~~952~~ (Inclusionary Housing) for the applicable district. Such base #floor area ratio# may be increased to the maximum #floor area ratio# set forth in such Section only through the provision of #affordable housing#, pursuant to Section 23-90, inclusive.

*  *  *

**123-65**
**Special Yard Regulations**

*  *  *

**123-652**
**Special yard regulations for mixed use buildings**

No #front yards# or #side yards# are required in #Special Mixed Use Districts#. However, if any open area extending along a #side lot line# is provided at any level, such open area shall have a minimum width of eight feet; except, if the #mixed use building# contains no more than two #dwelling units#, the open area extending along a #side lot line# may be less than eight feet in width at the level of the #dwelling unit#. For a #residential# portion of a #mixed use building#, the required #rear yard# shall be provided at the floor level of the lowest #story# containing #dwelling units# ~~or #rooming units#~~ where any window of such #dwelling units# ~~or #rooming units#~~ faces onto such #rear yard#.

*  *  *

**123-66**
**Height and Setback Regulations**

*  *  *

**123-662**
**All buildings in Special Mixed Use Districts with R6, R7, R8, R9 and R10 District designations**

In #Special Mixed Use Districts# where the designated #Residence District# is an R6, R7, R8, R9 or R10 District, the height and setback regulations of Sections 23-60 and 43-40 shall not apply. In lieu thereof, all #buildings or other structures# shall comply with the height and setback regulations of this Section.

(a) Medium and high density non-contextual districts

(1) In #Special Mixed Use Districts# where the designated #Residence District# is an R6, R7, R8, R9 or R10 District without a letter suffix, ~~except an R6A, R6B, R7A, R7B, R7D, R7X, R8A, R8B, R8X, R9A, R9X, R10A or R10X District,~~ the height of a #building or other structure#, or portion thereof, located within ten feet of a #wide street# or 15 feet of a #narrow street#, may not exceed the maximum base height specified in Table A of this Section, except for dormers permitted in accordance with paragraph (c) of this Section. Beyond ten feet of a #wide street# and 15 feet of a

#narrow street#, the height of a #building or other structure# shall not exceed the maximum #building# height specified in Table A. However, a #building or other structure# may exceed such maximum #building# height by four #stories# or 40 feet, whichever is less, provided that the gross area of each #story# located above the maximum #building# height does not exceed 80 percent of the gross area of that #story# directly below it.

* * *

(b) Medium and high density contextual districts

In #Special Mixed Use Districts# where the #Residence District# designation is an R6A, R6B, R7A, R7B, R7D, R7X, R8A, R8B, R8X, R9A, R9X, R10A or R10X District, the height and setback provisions of Section 23-662 shall apply. Where the #Residence District# designation is an R10X District, a tower may be provided in accordance with the provisions of Section 23-663. In addition, in all applicable districts, for #developments# or #enlargements# providing #affordable housing# pursuant to the Inclusionary Housing Program, as set forth in Section 23-90, inclusive, or for #developments# or #enlargements# where at least 20 percent of the #floor area# of the #zoning lot# contains #affordable independent residences for seniors#, the height and setback provisions of Section 23-664 shall apply. Separate maximum #building# heights are set forth within the Tables of Sections 23-662 and 23-664 for #developments# or #enlargements# with #qualifying ground floors# and for those with #non-qualifying ground floors#, as defined in Section 23-662. ~~no #building or other structure# shall exceed the maximum #building# height specified in Table B of this Section.~~

~~Setbacks are required for all portions of #buildings# that exceed the maximum base height specified in Table B. Such setbacks shall be provided in accordance with the following provisions:~~

~~(1) #Building# walls facing a #wide street# shall provide a setback at least ten feet deep from such wall of the #building# at a height not lower than the minimum base height specified in Table B. #Building# walls facing a #narrow street# shall provide a setback at least 15 feet deep from such wall of the #building# at a height not lower than the minimum base height specified in Table B.~~

~~(2) These setback provisions are optional for any #building# wall that is either located beyond 50 feet of a #street line# or oriented so that lines drawn perpendicular to such #building# wall would intersect a #street line# at an angle of 65 degrees or less. In the case of an irregular #street line#, the line connecting the most extreme points of intersection shall be deemed to be the #street line#.~~

~~(3) Required setback areas may be penetrated by dormers in accordance with paragraph (c) of this Section.~~

~~(4) Where the #Residence District# designation is an R10X District, no maximum #building# height shall apply. However, the minimum coverage of any portion of a #building# that exceeds the permitted maximum base height shall be 33 percent of the #lot area# of the #zoning lot#. Such minimum #lot# coverage requirement shall not apply to the highest four #stories# of the #building#.~~

~~TABLE B~~
~~HEIGHT AND SETBACK FOR ALL BUILDINGS~~
~~IN MEDIUM AND HIGH DENSITY CONTEXTUAL DISTRICTS~~
~~(in feet)~~

| ~~District~~ | ~~Minimum Base Height~~ | ~~Maximum Base Height~~ | ~~Maximum #Building# Height~~ |
|---|---|---|---|
| ~~R6B~~ | ~~30~~ | ~~40~~ | ~~50~~ |
| ~~R6A~~ | ~~40~~ | ~~60~~ | ~~70~~ |
| ~~R7B~~ | ~~40~~ | ~~60~~ | ~~75~~ |
| ~~R7A~~ | ~~40~~ | ~~65~~ | ~~80~~ |
| ~~R7D~~ | ~~60~~ | ~~85~~ | ~~100~~ |
| ~~R7X~~ | ~~60~~ | ~~85~~ | ~~125~~ |
| ~~R8A~~ | ~~60~~ | ~~85~~ | ~~120~~ |
| ~~R8B~~ | ~~55~~ | ~~60~~ | ~~75~~ |
| ~~R8X~~ | ~~60~~ | ~~85~~ | ~~150~~ |
| ~~R9A**~~ | ~~60~~ | ~~95~~ | ~~135~~ |
| ~~R9A*~~ | ~~60~~ | ~~102~~ | ~~145~~ |
| ~~R9X**~~ | ~~60~~ | ~~120~~ | ~~160~~ |
| ~~R9X*~~ | ~~105~~ | ~~120~~ | ~~170~~ |
| ~~R10A**~~ | ~~60~~ | ~~125~~ | ~~185~~ |
| ~~R10A*~~ | ~~125~~ | ~~150~~ | ~~210~~ |

| | | | |
|---|---|---|---|
| ~~R10X~~ | ~~60~~ | ~~85~~ | ~~***~~ |

~~*~~ ~~That portion of a district which is within 100 feet of a #wide street#~~

~~**~~ ~~That portion of a district on a #narrow street# except within a distance of 100 feet from its intersection with a #wide street#~~

~~***~~ ~~#Buildings# may exceed a maximum base height of 85 feet in accordance with paragraph (b)(4) of this Section~~

(c) Permitted obstructions and dormer provisions

Obstructions shall be permitted pursuant to Sections 23-62, 24-51 or 43-42. In addition, in all districts, within a required setback area, a dormer may be provided in accordance with the provisions of paragraph (c)(1) of Section 23-621. ~~exceed a maximum base height specified in Tables A or B of this Section and thus penetrate a required setback area, provided that, on any #street# frontage, the aggregate width of all dormers at the maximum base height does not exceed 60 percent of the length of the #street wall# of the highest #story# entirely below the maximum base height. At any level above the maximum base height, the length of a #street wall# of a dormer shall be decreased by one percent for every foot that such level of dormer exceeds the maximum base height. (See illustration of Dormer in Section 62-341).~~

However, all #buildings or other structures# on #waterfront blocks#, as defined in Section 62-11, shall comply with the height and setback regulations set forth for the designated #Residential District# as set forth in Section 62-34 (Height and Setback Regulations on Waterfront Blocks), inclusive.

* * *

# Article XII - Special Purpose Districts

**Chapter 4**
**Special Willets Point District**

**124-00**
**GENERAL PURPOSES**

The "Special Willets Point District" established in this Resolution is designed to promote and protect public health, safety and general welfare. These general goals include, among others, the following specific purposes:

(a) transform Willets Point into a diverse and sustainable community that enhances connections to its surroundings through a unique combination of uses;

(b) create a retail and entertainment destination that catalyzes future growth and strengthens Flushing's role as a nexus of economic, social and cultural activity;

(c) encourage a mix of uses that complement sporting venues within Flushing Meadows-Corona Park;

(d) maximize utilization of mass transit, reducing the automobile dependency of the redevelopment;

(e) create a livable community combining housing, retail and other uses throughout the district;

(f) create a walkable, urban streetscape environment with publicly accessible open spaces;

(g) encourage the pedestrian orientation of ground floor uses;

(h) build upon the diversity of the Borough of Queens as well as the proximity of regional transportation facilities, including the Van Wyck and Whitestone Expressways, LaGuardia and JFK Airports and the Long Island Railroad;

(i) provide flexibility of architectural design within limits established to assure adequate access of light and air to the street, and thus to encourage more attractive and economic building forms; and

(j) promote the most desirable use of land and building development in accordance with the District Plan and Urban Renewal Plan for Willets Point and thus improve the value of land and buildings and thereby improve the City's tax revenues.

* * *

**124-10**
**SPECIAL USE REGULATIONS**

The #use# regulations of the underlying district are modified as set forth in this Section, inclusive.

**124-11**
**Regulation of Residential Uses**

**124-111**
**Location of residential use within buildings**

The provisions of Section 32-422 (Location of floors occupied by commercial uses) shall be modified to permit #dwelling units# ~~or #rooming units#~~ on the same #story# as a #commercial use# ~~non-#residential use#~~ provided no access exists between such #uses# at any level containing #dwelling units# ~~or #rooming units#~~ and provided any #commercial uses# ~~non-#residential uses#~~ are not located directly over any #dwelling units# ~~or #rooming units#~~. However, such #commercial uses# ~~non-#residential uses#~~ may be located over #dwelling units# ~~or rooming units#~~ by authorization of the City Planning Commission upon a finding that sufficient separation of #residential uses# from #commercial uses# ~~non-#residential uses#~~ exists within the #building#.

*  *  *

**124-14**
**Retail Continuity**

The following regulations shall apply within Area A, as shown on Map 1 in the Appendix to this Chapter, to all portions of #buildings# with frontage on 126th Street, the #primary retail street#, ~~the~~ #retail streets#, #connector streets# and, in the event that a utility easement is retained on the #block# bounded by Roosevelt Avenue and 126th Street, along the frontage of the publicly accessible open space required by paragraph (d) of Section 124-42.

(a) Ground floor #uses#

#Uses# within #stories# on the ground floor or with a floor level within five feet of #base flood elevation# shall be limited to #commercial uses# permitted by the underlying district, ~~but not including~~ except #uses# listed in Use Groups 6B, 6E, 8C, 8D, 9B, 10B or 12D~~, as provided in Article III, Chapter 2~~. A #building's# frontage shall be allocated exclusively to such #uses#, except for Type 2 lobby space or entryways provided in accordance with Section 37-33 (Maximum Width of Certain Uses), parking pursuant to Section 124-50, inclusive, and vehicular access pursuant to Section 124-53 (Curb Cut Restrictions). Such #uses# shall have a minimum depth of 50 feet measured from any #street wall# facing 126th Street, the #primary retail street# or #connector streets#.

~~In no event shall the length of such frontage occupied by lobby space or entryways exceed, in total, 40 feet or 25 percent of the #building's# frontage, whichever is less, except that the width of a lobby need not be less than 20 feet.~~

*  *  *

(d) Transparency

For any #building#, or portion thereof, #developed# or #enlarged# after November 13, 2008, each ground floor #street wall# shall be glazed in accordance with 37-34 (Minimum Transparency Requirements) ~~with materials which may include #show windows#, glazed transoms or glazed portions of doors. Such glazed area shall occupy at least 70 percent of the area of each such ground floor #street wall#, measured to a height of 10 feet above the level of the adjoining sidewalk or public access area. Not less than 50 percent of such glazed area shall be glazed with transparent materials and up to 20 percent of such area may be glazed with translucent materials.~~

However, in locations where such ground floor #street wall# above the level of the adjoining sidewalk or public access area is below #base flood elevation#, the required glazed area shall occupy an area measured from #base flood elevation# ~~to a height 10 feet above #base flood elevation#~~.

*  *  *

**124-50**
**OFF-STREET PARKING REGULATIONS**

Off-street parking shall be provided for all required parking spaces and loading berths as specified by the underlying district, except as modified by the special regulations of this Section, inclusive.

**124-51**
**Use and Location of Parking Facilities**

The provisions of this Section shall apply to all off-street parking spaces within the #Special Willets Point District#.

Floor space used for parking shall be exempt from the definition of #floor area#.

Parking facilities with over 225 parking spaces shall provide adequate reservoir space at the vehicular entrances to accommodate either ten automobiles or five percent of the total parking spaces provided in such facility, whichever amount is greater, but in no event shall such reservoir space be required for more than 50 automobiles.

(a) All off-street parking spaces shall be located within facilities that, except for entrances and exits, are located:

(1) entirely below the level of any #street# or publicly accessible open space upon which such facility, or portion thereof, fronts;

(2) in a #cellar# no more than four feet above grade within Area B, as shown on Map 1 in the Appendix to this Chapter, provided that the #street wall# is set back at least four feet from the #street line# except for projections permitted pursuant to Section 124-22, paragraph (a)(3), and planted areas are provided pursuant to Section 124-22, paragraph (a)(5), and further provided that 50 percent of such #street wall# with adjacent parking spaces consists of opaque materials;

(3) at every level above-grade, wrapped by ~~behind any~~ #floor area# provided in accordance with paragraph (a) of Section 37-35 (Parking Wrap and Screening Requirements) ~~containing permitted #commercial#, #community facility# or #residential uses#, at least 25 feet from any #street wall# or public access area~~; or

(4) above-grade and adjacent to a #street wall# or public access area, and screened in accordance with the provisions set forth in paragraphs (b)(1) through (b)(3) of Section 37-35 (Parking Wrap and Screening Requirements) ~~provided that any non-horizontal parking deck structures are not visible from the exterior of the #building# in elevation view and opaque materials are located in the exterior #building# wall between the bottom of the floor of each parking deck and no less than three feet above such deck and a total of at least 50 percent of such #street wall# with adjacent parking spaces consists of opaque materials~~. A parking structure so screened shall be permitted only in the following locations:

(i) except within #blocks# that bound the intersection of 126th Street and Northern Boulevard or 126th Street and Roosevelt Avenue, a parking facility may be located adjacent to a #street wall# facing 126th Street above a height of 35 feet and limited to a height of 85 feet~~, provided that no less than 60 percent and no more than 70 percent of the surface area of the portion of such #street wall# with adjacent parking spaces consists of one or more of the following: #signs#, graphic or sculptural art, or living plant material~~. At least 30 ~~25~~ feet of #floor area# containing permitted ~~#commercial#, #community facility# or #residential~~ uses# shall separate such parking spaces from any other adjacent #street#;

(ii) a parking facility may be located adjacent to a #street wall# limited to a height of 85 feet on a #block# that bounds the intersection of 126th Street and Northern Boulevard, provided that such #street wall# is on Northern Boulevard and is more than 100 feet from 126th Street~~, and provided that no less than 60 percent and no more than 70 percent of the surface area of the portion of such #street wall# with adjacent parking spaces consists of one or more of the following: #signs#, graphic or sculptural art, or living plant material~~. At least 30 ~~25~~ feet of #floor area# containing permitted ~~#commercial#, #community facility# or #residential~~ uses# shall separate such parking spaces from adjacent #residential#, #connector# or #primary retail streets#;

(iii) a parking facility not on a #block# that bounds the intersection of 126th Street and Northern Boulevard may be located adjacent to a #street wall# limited to a height of 40 feet facing Northern Boulevard, provided that such #street wall# with adjacent parking

spaces is on Northern Boulevard and is more than 100 feet from 126th Street. At least 30 ~~25~~ feet of #floor area# containing permitted ~~#commercial#, #community facility# or #residential~~ uses# shall separate such parking spaces from any other adjacent #street#;

(iv) a parking facility may be located adjacent to a #street wall# on a #block# that bounds the intersection of 126th Street and Roosevelt Avenue, provided that such #street wall# with adjacent parking spaces is more than 100 feet from 126th Street, Roosevelt Avenue and at least 30 ~~25~~ feet from any #connector street#;

(v) a parking facility may be located adjacent to a #street wall# limited to a height of 40 feet facing the eastern boundary of the #Special Willets Point District#, within 200 feet of such eastern boundary, so that such parking facility is not visible from a #connector street#. At least 30 ~~25~~ feet of permitted #floor area# containing ~~#commercial#, #community facility# or #residential~~ uses# shall separate such parking spaces from adjacent #residential# and #connector streets#; and

(vi) a parking facility may be located adjacent to a #street wall# where such #street wall# is on a #service street#, provided that at least 30 ~~25~~ feet of #floor area# containing permitted ~~#commercial#, #community facility# or #residential~~ uses# shall separate such parking spaces from adjacent #residential#, #connector#, #retail# or #primary retail streets#.

(b) All parking facilities with parking spaces adjacent to an exterior #building# wall that is not a #street wall# shall provide screening in accordance with the provisions set forth in paragraphs (b)(1) through (b)(3) of Section 37-35 ~~of such exterior wall so that any non-horizontal parking deck structures are not visible from the exterior of the #building# in elevation view and opaque materials are located in the exterior #building# wall between the bottom of the floor of each parking deck and no less than three feet above such deck and a total of at least 50 percent of such exterior #building# wall with adjacent parking spaces consists of opaque materials~~.

* * *

# Article XII - Special Purpose Districts

**Chapter 5**
**Special Southern Hunters Point District**

**125-00**
**GENERAL PURPOSES**

The "Special Southern Hunters Point District" established in this Resolution is designed to promote and protect public health, safety and general welfare. These general goals include, among others, the following specific purposes:

(a) encourage well-designed buildings that complement the built character of the Hunters Point neighborhood;

(b) maintain and reestablish physical and visual public access to and along the waterfront;

(c) broaden the regional choice of residences by introducing new affordable housing;

(d) achieve a harmonious visual and functional relationship with the adjacent neighborhood;

(e) create a lively and attractive built environment that will provide daily amenities and services for the use and enjoyment of area residents, workers and visitors;

(f) take maximum advantage of the beauty of the East River waterfront and provide an open space network comprised of public parks, public open space and public access areas;

(g) provide flexibility of architectural design within limits established to assure adequate access of light and air to the street, and thus to encourage more attractive and economic building forms; and

(h) promote the most desirable use of land in accordance with the district plan for Southern Hunters Point, thus conserving the value of land and buildings, thereby protecting the City's tax revenues.

* * *

**125-10**
**USE REGULATIONS**

* * *

**125-13**
**Location of Uses in Mixed Buildings**

The provisions of Section 32-422 (Location of floors occupied by commercial uses) are modified to permit #dwelling units# ~~or #rooming units#~~ on the same #story# as a #commercial use# ~~non-#residential use#~~, provided no access exists between such #uses# at any level containing #dwelling units# ~~or #rooming units#~~ and provided any #commercial uses# ~~non-#residential uses#~~ are not located directly over any #dwelling units# ~~or #rooming units#~~. However, such #commercial uses# ~~non-#residential uses#~~ may be located over #dwelling units# ~~or #rooming units#~~ by authorization of the City Planning Commission upon a finding that sufficient separation of #residential uses# from #commercial uses# ~~non-#residential uses#~~ exists within the #building#.

~~**125-14**~~
~~**Security Gates**~~

~~All security gates that are swung, drawn or lowered to secure #commercial# or #community facility# premises shall, when closed, permit visibility of at least 75 percent of the area covered by such gate when viewed from the #street# or any publicly accessible area, except that this provision shall not apply to entrances or exits to parking garages.~~

**125-20**
**FLOOR AREA REGULATIONS**

* * *

**125-22**
**Newtown Creek Subdistrict**

In the Newtown Creek Subdistrict, the maximum #floor area ratio# shall be 2.75, and may be increased only as set forth in this Section.

* * *

(b) #Floor area# increase for Inclusionary Housing

(1) Within the #Special Southern Hunters Point District#, the Newtown Creek Subdistrict shall be an #Inclusionary Housing designated area#, pursuant to Section 12-10 (DEFINITIONS), for the purpose of making the Inclusionary Housing Program regulations of Section 23-90, inclusive, and this Section, applicable within the Special District.

(2) In the Newtown Creek Subdistrict, for #developments# that provide a publicly accessible private street and open area that comply with the provisions of paragraph (a) of this Section, the #floor area ratio# for any #zoning lot# with #buildings# containing #residences# may be increased from 3.75 to a maximum #floor area ratio# of 5.0 through

the provision of #affordable housing#, pursuant to the provisions relating to #Inclusionary Housing designated areas# in Section 23-90 (INCLUSIONARY HOUSING), except that:

(i) the height and setback regulations of paragraph (a) of Section 23-664~~954~~ (Modified height and setback regulations for certain buildings) shall not apply. In lieu thereof, the special height and setback regulations of Section 125-30, inclusive, of this Chapter shall apply; and

* * *

# Article XII - Special Purpose Districts

**Chapter 8**
**Special St. George District**

**128-00**
**GENERAL PURPOSES**

The "Special St. George District" established in this Resolution is designed to promote and protect public health, safety and general welfare. These general goals include among others, the following specific purposes:

(a) build upon St. George's existing strengths as a civic center, neighborhood and transit hub by providing rules that will bolster a thriving, pedestrian-friendly business and residence district;

(b) establish zoning regulations that facilitate continuous ground floor retail and the critical mass needed to attract and sustain a broader mix of uses;

(c) require a tall, slender building form that capitalizes on St. George's hillside topography and maintains waterfront vistas;

(d) encourage the reuse and reinvestment of vacant office buildings;

(e) accommodate an appropriate level of off-street parking while reducing its visual impact; and

(f) promote the most desirable use of land and building development in accordance with the District Plan for St. George and thus conserve the value of land and buildings and thereby protect the City's tax revenues.

* * *

**128-10**
**USE REGULATIONS**

**128-11**
**Ground Floor Uses on Commercial Streets**

Map 2 (Commercial Streets) in the Appendix to this Chapter specifies locations where the special ground floor #use# regulations of this Section apply.

#Uses# on the ground floor of a #building# shall be limited to #commercial uses#, except for Type 1 lobbies and entrances to #accessory# parking spaces provided in accordance with Section 37-33 (Maximum Width of Certain Uses). Such #commercial uses# shall comply with the minimum depth provisions of Section 37-32 (Ground Floor

Depth Requirements for Certain Uses). In addition, #accessory# parking spaces, including such spaces #accessory# to #residences#, shall be permitted on the ground floor, provided they comply with the provisions of Section 37-35 (Parking Wrap and Screening Requirements). The level of the finished floor of such ground floor shall be located not higher than two feet above nor lower than two feet below the as-built level of the adjoining #street#.

~~#Commercial uses# shall have a depth of at least 30 feet from the #street wall# of the #building# facing the #commercial street# and shall extend along the entire width of the #building# except for lobbies and entrances to #accessory# parking spaces, provided such lobbies and entrances do not occupy more than 25 percent of the #street wall# width of the #building#. Enclosed parking spaces, or parking spaces covered by a #building#, including such spaces #accessory# to #residences#, shall be permitted to occupy the ground floor provided they are located beyond 30 feet of the #street wall# of the #building# facing the #commercial street#.~~

**128-12**
**Transparency Requirements**

Any #street wall# of a #building developed# or #enlarged# after October 23, 2008, where the ground floor level of such #development# or #enlarged# portion of the #building# contains #commercial# or #community facility uses#~~, excluding #schools#,~~ shall be glazed in accordance with the provisions of Section 37-34 (Minimum Transparency Requirements) ~~transparent materials which may include #show windows#, glazed transoms or glazed portions of doors. Such glazed area shall occupy at least 50 percent of the area of each such ground floor #street wall# measured to a height of 10 feet above the level of the adjoining sidewalk or public access area~~.

For the purposes of this Section, Bank Street shall be considered a #street#. However, this Section shall not apply to a stadium #use# within the North Waterfront Subdistrict.

**128-13**
**Location of Uses in Mixed Buildings**

The provisions of Section 32-422 (Location of floors occupied by commercial uses) are modified to permit #dwelling units# ~~or #rooming units#~~ on the same #story# as a #commercial use# ~~non-#residential use#~~ provided no access exists between such #uses# at any level containing #dwelling units# or ~~#rooming units#~~ and provided any #commercial uses# ~~non-#residential uses#~~ are not located directly over any #dwelling units# ~~or #rooming units#~~. However, such #commercial use# ~~non-#residential uses#~~ may be located over #dwelling units# ~~or #rooming units#~~ by authorization of the City Planning Commission upon a finding that sufficient separation of #residential uses# from #commercial uses# ~~non-#residential uses#~~ exists within the #building#.

~~**128-14**~~
~~**Security Gates**~~

~~Within the #Special St. George District#, all security gates that are swung, drawn or lowered to secure~~

~~#commercial# or #community facility# premises shall, when closed, permit visibility of at least 75 percent of the area covered by such gate when viewed from the #street# or publicly accessible area, except that this provision shall not apply to entrances or exits to parking garages.~~

**128-20**
**FLOOR AREA, LOT COVERAGE AND YARD REGULATIONS**

* * *

**128-22**
**Maximum Lot Coverage**

In C4-2 Districts within the Upland Subdistrict, the underlying #open space ratio# provisions shall not apply. In lieu thereof, the maximum permitted #lot coverage# for a #residential building#, or portion thereof, shall be 70 percent for an #interior# or #through lot# and 100 ~~80~~ percent for a #corner lot#. ~~However, no maximum #lot coverage# shall apply to any #corner lot# of 5,000 square feet or less.~~

* * *

**128-30**
**HEIGHT AND SETBACK REGULATIONS**

* * *

**128-33**
**Maximum Base Height**

The maximum height of a #building or other structure# before setback shall be as specified on Map 3 (Minimum and Maximum Base Heights) in the Appendix to this Chapter. Where a maximum base height of 65 ~~60~~ feet applies as shown on Map 3, such maximum base height shall be reduced to 40 feet for #zoning lots developed# or #enlarged# pursuant to the tower provisions of Section 128-35. When a #building# fronts on two intersecting #streets# for which different maximum base heights apply, the higher base height may wrap around to the #street# with the lower base height for a distance of up to 100 feet. All portions of #buildings or other structures# above such maximum base heights shall provide a setback at least ten feet in depth measured from any #street wall# facing a #wide street# and 15 feet in depth from any #street wall# facing a #narrow street#.

* * *

**128-34**
**Maximum Building Height**

In C4-2 Districts within the Upland Subdistrict, for #buildings# that are not #developed# or #enlarged# pursuant to the tower provisions of Section 128-35 (Towers), the maximum height of a #building or other structure# and the maximum number of #stories# shall be as set forth in Section 23-662 (Maximum height of buildings and setback regulations) for a residential equivalent of an R6 District. Separate maximum #building# heights are set forth within such Section for #developments# or #enlargements# with #qualifying ground floors# and for those with #non-qualifying ground floors#, as defined in Section 23-662. ~~the maximum height of a #building or other structure# shall be 70 feet, except that~~ However, on Bay Street where there is a maximum base height of 85 feet, the maximum height of a #building or other structure# also shall be 85 feet.

In C4-2 Districts within the Upland Subdistrict for #buildings# that are #developed# or #enlarged# pursuant to the tower provisions of Section 128-35, the maximum height of the tower portion of a #building# shall be 200 feet, and the height of all other portions of the #building# shall not exceed the applicable maximum base height. Where a maximum base height of 65 ~~60~~ feet applies as shown on Map 3 in the Appendix to this Chapter, such maximum base height shall be reduced to 40 feet for #zoning lots developed# or #enlarged# pursuant to the tower provisions of Section 128-35.

**128-35**
**Towers**

The tower provisions of this Section shall apply, as an option, to any #zoning lot# with a #lot area# of at least 10,000 square feet. Any portion of a #building developed# or #enlarged# on such #zoning lots# that exceeds the applicable maximum base height shall be constructed as either a point tower or a broad tower, as follows:

(a) Point tower

(1) Tower #lot coverage# and maximum length

Each #story# located entirely above a height of ~~70~~ 75 feet shall not exceed a gross area of 6,800 square feet. The outermost walls of each #story# shall be inscribed within a rectangle, and the maximum length of any side of such rectangle shall be 85 feet.

(2) Tower top articulation

The highest three #stories#, or as many #stories# as are located entirely above a height of ~~70~~ 75 feet, whichever is less, shall have a #lot coverage# of at least 50 percent of the #story# immediately below such #stories#, and a maximum #lot coverage# of 80 percent of the #story# immediately below such #stories#. Such reduced #lot coverage# shall be achieved by one or more setbacks on each face of the tower, where at least one setback on each tower face has a depth of at least four feet, and a width that, individually or in the aggregate, is equal to at least 10 percent of the width of such respective tower face. For the purposes of this paragraph, (a)(2), each tower shall have four tower faces, with each face being the side of a rectangle within which the outermost walls of the highest #story# not subject to the reduced #lot coverage# provisions have been inscribed. The required setbacks shall be measured from the outermost walls of the #building# facing each tower

face. Required setback areas may overlap.

(b) Broad tower

Each #story# located entirely above a height of ~~70~~ 75 feet shall not exceed a gross area of 8,800 square feet. The outermost walls of each such #story# shall be inscribed within a rectangle, and the maximum length of any side of such rectangle shall be 135 feet. The upper #stories# shall provide setbacks with a minimum depth of 15 feet measured from the east facing wall of the #story# immediately below. Such setbacks shall be provided at the level of three different #stories#, or as many #stories# as are located entirely above a height of ~~70~~ 75 feet, whichever is less. For towers with at least six #stories# located entirely above a height of ~~70~~ 75 feet, the lowest level at which such setbacks may be provided is 100 feet, and the highest #story# shall be located entirely within the western half of the tower.

(c) Orientation of all towers

The maximum length of the outermost walls of any side of each #story# of a #building# facing the #shoreline# that is entirely above a height of ~~70~~ 75 feet shall not exceed 80 feet. For the purposes of this Section, the #street line# of St. Marks Place shall be considered to be a line parallel to the #shoreline#, and any side of such rectangle facing St. Marks Place from which lines perpendicular to the #street line# of St Marks Place may be drawn, regardless of intervening structures, properties or #streets#, shall not exceed 80 feet.

(d) Location of all towers

Any portion of a #building# that exceeds a height of ~~70~~ 75 feet shall be no closer to a #side lot line# than eight feet, and any #story# of a #building# that is entirely above a height of ~~70~~ 75 feet shall be located within 25 feet of a #street line# or sidewalk widening line, where applicable.

(e) Maximum tower height

The maximum height of any #building# utilizing the tower provisions of this Section shall be 200 feet. The height of the tower portion of the #building# shall be measured from the #base plane#.

(f) Tower and base integration

All portions of a #building# that exceed the applicable maximum base height set forth in Section 128-33 shall be set back at least 10 feet from the #street wall# of a #building# facing a #wide street# and at least 15 feet from the #street wall# of a #building# facing a #narrow street#. However, up to 50 percent of the #street wall# of the portion of the #building# located above a height of ~~70~~ 75 feet need not be set back from the #street wall# of the #building#, and may rise without setback from grade, provided such portion of the #building# is set back at least 10 feet from a #wide street line# or sidewalk widening line, where applicable, and at least 15 feet from a #narrow street line# or sidewalk widening line, where applicable.

(g) Tower exclusion areas

No #building or other structure# may exceed a height of ~~70~~ 75 feet within the areas designated on Map 4 (Tower Restriction Areas) in the Appendix to this Chapter.

* * *

**128-50**
**PARKING REGULATIONS**

* * *

**128-51**
**Required Off-Street Parking and Loading**

In C4-2 Districts, the following special regulations shall apply:

(a) #Residential uses#

One off-street parking space shall be provided for each #dwelling unit# created after October 23, 2008, including any #dwelling units# within #buildings converted# pursuant to Article 1, Chapter 5 (Residential Conversion within Existing Buildings), except that the provisions of Section 25-25 (Modification of Requirements for Income-Restricted Housing Units or Affordable Independent Residences for Seniors) shall apply to #income-restricted housing units#. However, where the total number of required spaces is five or fewer or, for #conversions#, where the total number of required spaces is 20 or fewer, no parking shall be required, except that such waiver provision shall not apply to any #zoning lot# subdivided after October 28, 2008. The provisions of Section 73-46 (Waiver of Requirements for Conversions) shall apply to #conversions# where more than 20 parking spaces are required.

* * *

**128-54**
**Location of Accessory Off-Street Parking Spaces**

No open parking areas shall be located between the #street wall# of a #building# and the #street line#, and no open parking area shall front upon a #commercial street#. All open parking areas, regardless of the number of parking spaces, shall comply with the perimeter screening requirements of Section 37-921.

All off-street parking spaces within structures shall be located within facilities that, except for entrances and exits, are:

(a) entirely below the level of each #street# upon which such facility fronts; or

(b) located, at every level above-grade, behind #floor area# or screening in accordance with the provisions of 37-35 (Parking Wrap and Screening Requirements). For the purpose of applying such provisions, #commercial streets# designated on Map 2 in Appendix A of this Chapter shall be considered designated retail streets ~~behind #commercial#, #community facility# or #residential floor area# so that no portion of such parking facility is visible from adjoining #streets#. The minimum depth of any such #floor area# shall be 30 feet, except that such depth may be reduced to 15 feet where the #street wall# containing such #floor area# fronts upon a #street# with a slope in excess of 11 percent~~; and

(c) no parking shall be permitted on the roof of such facilities.

* * *

**Appendix**
**Special St. George District Plan**

*  *  *

Map 3 – Minimum and Maximum Base Heights

[TO BE REMOVED]

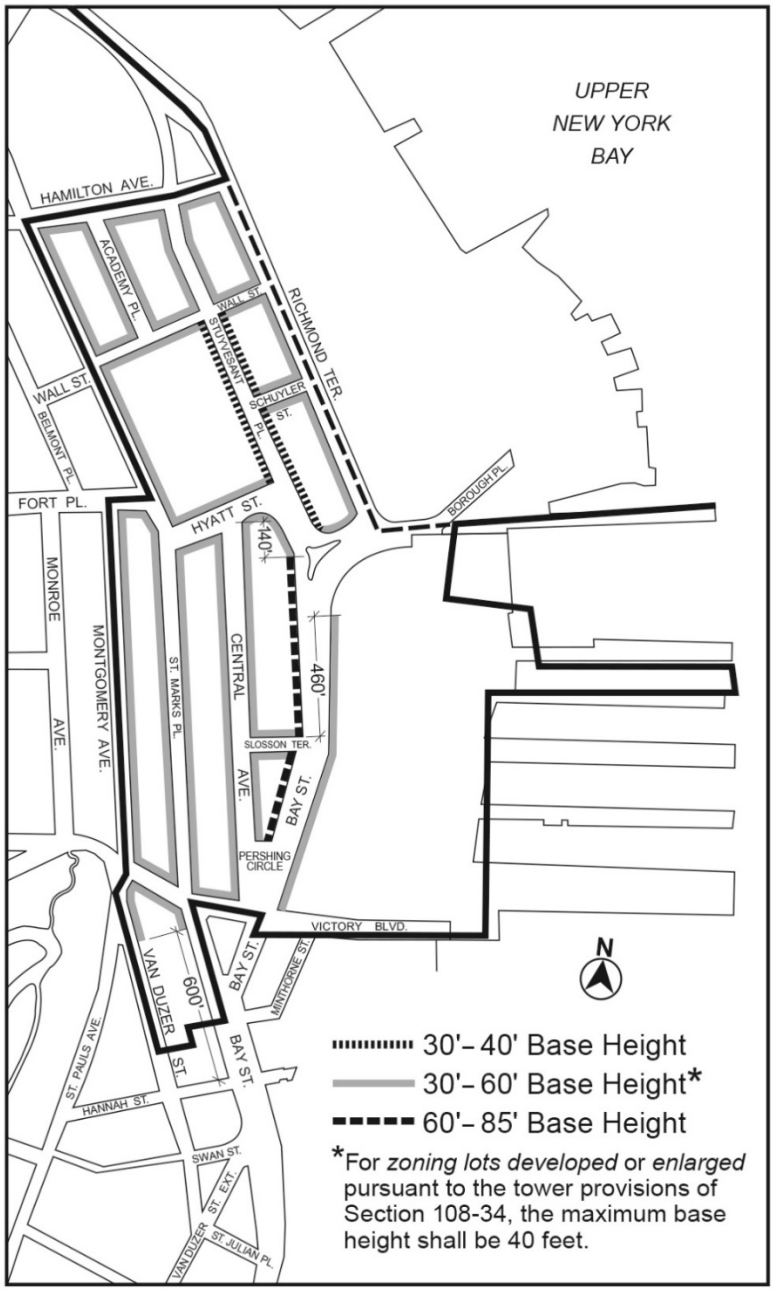

Map 3 – Minimum and Maximum Base Heights

[TO BE ADDED]

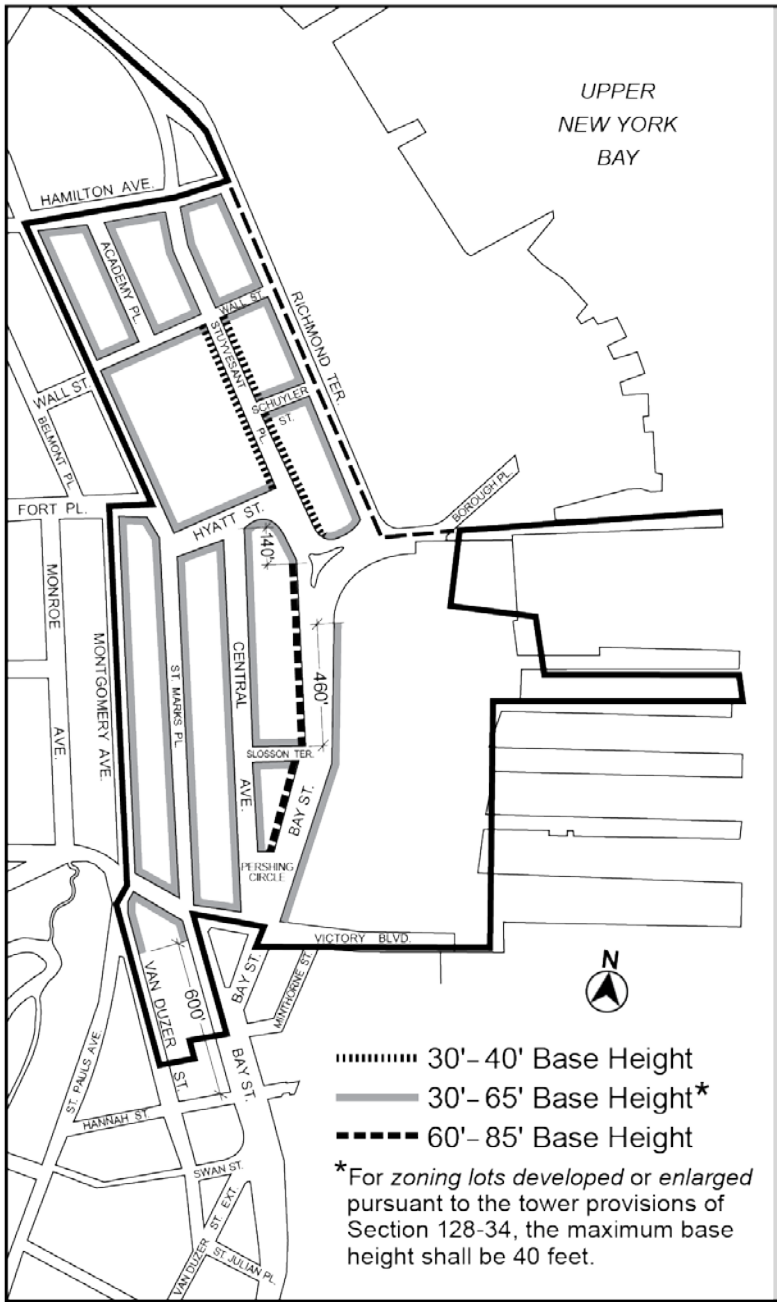

# Article XIII - Special Purpose Districts

**Chapter 1**
**Special Coney Island District**

**131-00**
**GENERAL PURPOSES**

The "Special Coney Island District" established in this Resolution is designed to promote and protect public health, safety and general welfare. These general goals include, among others, the following specific purposes:

(a) preserve, protect and enhance the character of the existing amusement district as the location of the city's foremost concentration of amusements and an area of diverse uses of a primarily entertainment and entertainment-related nature;

(b) facilitate and guide the development of a year-round amusement, entertainment and hotel district;

(c) facilitate and guide the development of a residential and retail district;

(d) provide a transition to the neighboring areas to the north and west;

(e) provide flexibility for architectural design that encourages building forms that enhance and enliven the streetscape;

(f) control the impact of development on the access of light and air to streets, the Boardwalk and parks in the district and surrounding neighborhood;

(g) promote development in accordance with the area's District Plan and thus conserve the value of land and buildings, and thereby protect the City's tax revenues.

* * *

**131-10**
**SPECIAL USE REGULATIONS**

* * *

**131-13**
**Special Use Regulations in Subdistricts**

**131-131**
**Coney East Subdistrict**

The #use# regulations of the underlying C7 District are modified as set forth in this Section. The locations of the mandatory ground floor #use# regulations of paragraphs (b), (c), (d) and (f) of this Section are shown on the #streets#, or portions of #streets#, specified on Map 2 in the Appendix to this Chapter. #Transient hotels# and Use Groups A, B and C, as set forth in Sections 131-11 through 131-123, inclusive, and #public parking garages#, shall be the only #uses# allowed in the Coney East Subdistrict, and shall comply with the following regulations:

* * *

(f) Depth of ground floor #uses#

All ground floor #uses# within #buildings# shall have a depth of at least 15 feet measured from the #street wall# of a #building#, located on #streets#, or portions of Streets#, shown on Map 2. <u>However, such minimum depth requirement may be reduced where necessary in order to accommodate vertical circulation cores or structural columns associated with upper #stories# of the #building#.</u>

* * *

**131-132**
**Coney North and Coney West Subdistricts**

In the Coney North and Coney West Subdistricts, #uses# allowed by the underlying district regulations shall apply, except as modified in this Section for #uses# fronting upon #streets# specified on Map 2 (Mandatory Ground Floor Use Requirements) in the Appendix to this Chapter. For the purposes of this Section, the “building line” shown on Parcel F on Map 2 shall be considered a #street line# of Ocean Way or Parachute Way, as applicable. Furthermore, an open or enclosed ice skating rink shall be a permitted #use# anywhere within Parcel F in the Coney West Subdistrict.

(a) Mandatory ground floor level #uses# along certain #streets#

* * *

(1) Riegelmann Boardwalk

Only #uses# listed in Use Groups A, B and C and #transient hotels# located above the ground floor level are permitted within 70 feet of Riegelmann Boardwalk, except that a #transient hotel# lobby may occupy up to 30 feet of such ground floor frontage along Riegelmann Boardwalk. Use Group C #uses# shall be limited to 2,500 square feet of #floor area# and 30 feet of #street# frontage for each establishment. All other establishments shall be limited to 60 feet of #street# frontage, except that for any establishment on a corner, one #street# frontage may extend up to 100 feet. All ground floor #uses# within #buildings# shall have a depth of at least 15 feet measured from the #street wall# of the #building#. <u>However, such minimum depth requirement may be reduced where necessary in order to accommodate vertical circulation cores or structural columns associated with upper #stories# of the #building#.</u>

(2) #Streets# other than Riegelmann Boardwalk

* * *

All ground floor #commercial uses# within #buildings# shall have a depth of at least 50 feet measured from the #street wall# of the #building#. Such minimum 50 foot depth requirement may be reduced where necessary in order to accommodate a #residential# lobby, ~~and~~ vertical circulation cores or structural columns associated with upper #stories# of the #building#.

* * *

**131-14**
**Location of Uses within Buildings**

The provisions of Section 32-42 are modified to permit:

(a) #residential uses# on the same #story# as a #commercial use# ~~non-#residential use#~~ or directly below a #commercial use# ~~non-#residential use#~~, provided no access exists between such #uses# at any level containing #residences#, and separate elevators and entrances from the #street# are provided; and

* * *

**131-15**
**Transparency**

Each ground floor level #street wall# of a #commercial# or #community facility use# other than a #use# listed in Use Group A, as set forth in Section 131-121, shall be glazed in accordance with the provisions of Section 37-34 (Minimum Transparency Requirements). ~~with materials which may include #show windows#, glazed transoms or glazed portions of doors. Such glazing shall occupy at least 70 percent of the area of each such ground floor level #street wall#, measured to a height of 10 feet above the level of the adjoining sidewalk, public access area or #base plane#, whichever is higher. Not less than 50 percent of the area of each such ground floor level #street wall# shall be glazed with transparent materials and up to 20 percent of such area may be glazed with translucent materials.~~

However, in the Coney East Subdistrict and along Riegelmann Boardwalk and boundary of KeySpan Park in the Coney West Subdistrict, in lieu of the transparency requirements of this Section, at least 50 ~~70~~ percent of the area of the ground floor level #street wall# of a #commercial use#, measured to a height of 12 ~~10~~ feet above the level of the adjoining sidewalk, public access area or #base plane#, whichever is higher, may be designed to be at least 50 ~~70~~ percent open during seasonal business hours.

~~**131-16**~~
~~**Security Gates**~~

~~All security gates installed after July 29, 2009, that are swung, drawn or lowered to secure #commercial# or #community facility# premises shall, when closed, permit visibility of at least 75 percent of the area covered by such gate when viewed from the #street#. However, this provision shall not apply to entrances or exits to parking garages, or to any #use# fronting upon Riegelmann Boardwalk, provided that security gates at such locations that permit less than 75 percent visibility when closed shall be treated with artwork.~~

**131-16 ~~131-17~~**
**Authorization for Use Modifications**

* * *

**131-30**
**FLOOR AREA, LOT COVERAGE AND YARD REGULATIONS**

The #floor area ratio# regulations of the underlying districts shall be modified as set forth in this Section, inclusive.

* * *

**131-32**
**Coney West, Coney North and Mermaid Avenue Subdistricts**

* * *

**131-321**
**Special floor area regulations for residential uses**

R7A R7D R7X

* * *

(d) Height and setback

For all #zoning lots#, or portions thereof, located in the Coney West or Coney North Subdistricts, the height and setback regulations of Section 23-664 (Modified height and setback regulations for certain buildings) ~~23-954~~ shall not apply. In lieu thereof, the height and setback regulations of this Chapter shall apply.

* * *

**131-324**
**Lot coverage**

~~For #residential uses# in the Coney North and Coney West Subdistricts, no maximum #lot coverage# shall apply to any #corner lot#.~~

~~For #residential uses# in the Mermaid Avenue Subdistrict, no maximum #lot coverage# shall apply to any #zoning lot# comprising a #corner lot# of 5,000 square feet or less.~~

~~Furthermore, in~~ In the #Special Coney Island District#, the level of any #building# containing #accessory# parking spaces or non-#residential uses# shall be exempt from #lot coverage# regulations.

**131-40**
**HEIGHT AND SETBACK REGULATIONS**

The underlying height and setback regulations shall not apply. In lieu thereof, the height and setback regulations of this Section shall apply. The height of all #buildings or other structures# shall be measured from the #base plane#.

* * *

**131-421**
**Coney East Subdistrict, south side of Surf Avenue**

The following regulations shall apply along the south side of Surf Avenue and along those portions of #streets# intersecting Surf Avenue located north of a line drawn 50 feet north of and parallel to the northern #street line# of Bowery and its westerly prolongation.

* * *

(b) #Building# base

(1) Surf Avenue, west of West 12th Street

* * *

~~For #buildings# located west of West 12th Street that provide a tower in accordance with the requirements of paragraph (d) of this Section, at least 40 percent of the #aggregate width of street walls# facing Surf Avenue shall not exceed a height of 45 feet without setback, and at least 40 percent of the #aggregate width of street walls# facing Surf Avenue shall rise without setback to a height of at least 60 feet but not more than 65 feet. Furthermore, any~~ Any portion of a #street wall# which exceeds a height of 60 feet shall be located within 150 feet of the intersection of two #street lines# and shall coincide with the location of a tower. Towers shall comply with the location requirements of paragraph (d) of this Section.

*  *  *

**131-423**
**Along all other streets**

The following regulations shall apply along Wonder Wheel Way, Bowery, and all other #streets#, and portions thereof, located south of a line drawn 50 feet north of and parallel to the northern #street# line of Bowery and its westerly prolongation.

*  *  *

(b) Maximum height

The #street wall# of a #building#, or portion thereof, shall rise to a minimum height of 20 feet and a maximum height of 40 feet before setback. The maximum height of a #building or other structure# shall be 60 feet, provided any portion of a #building# that exceeds a height of 40 feet shall be set back from the #street wall# of the #building# at least 20 feet.

West of West 12th Street, along the northern #street line# of Bowery, the maximum #building# height shall be 40 feet. If a tower is provided along the Surf Avenue portion of the #block#, 40 percent of the #aggregate width of street walls# may rise above the maximum #street wall# height of 40 feet, provided that ~~and~~ such portion is ~~of the #aggregate width of street walls# shall be~~ located within 150 feet of the intersection of two #street lines# ~~and shall coincide with that portion of the #street wall# along Surf Avenue that rises to a height of between 60 to 65 feet, pursuant to the provisions of paragraph (b)(1) of Section 131-421~~. However, where the portion of the #block# that fronts on Surf Avenue is #developed# or #enlarged# pursuant to the special regulations for Use Group A in paragraph (c)(3) of Section 131-421 (Coney East Subdistrict, south side of Surf Avenue), the #street wall# may rise after a setback of 20 feet to a maximum height of 60 feet for the entire length of the Bowery #street line#, or may extend beyond the 40 percent of the #aggregate width of street wall# for the length of the #street wall# of such Use Group A #development# or #enlargement# which fronts along Surf Avenue, whichever is less.

**131-43**
**Coney West Subdistrict**

*  *  *

**131-431**
**Coney West District, Surf Avenue**

The regulations of this Section shall apply along Surf Avenue. The #street wall# location provisions of paragraph (a) of this Section shall also apply along #streets# intersecting Surf Avenue within 50 feet of Surf Avenue, and the #building# base regulations of paragraph (b) of this Section shall also apply along #streets# within 100 feet of

Surf Avenue.

* * *

(b) #Building# base

A #street wall# fronting on Surf Avenue shall rise without setback to a minimum height of six #stories# or 65 feet, or the height of the #building#, whichever is less, and a maximum height of eight #stories# or 85 feet, whichever is less, before a setback is required. ~~For #buildings# that exceed a height of eight #stories# or 85 feet, at least 40 percent of the #aggregate width of street walls# facing Surf Avenue shall not exceed a height of six #stories# or 65 feet, whichever is less, and at least 40 percent of the #aggregate width of street walls# facing Surf Avenue shall rise without setback to a height of at least eight #stories# or 80 feet, whichever is less.~~ However, on the #block# front bounded by West 21st Street and West 22nd Street, the minimum height of a #street wall# shall be 40 feet and the maximum height of a #street wall# shall be six #stories# or 65 feet, whichever is less, before a setback is required.

* * *

(c) Transition height

Above the maximum base height, a #street wall# may rise to a maximum transition height of nine #stories# or 95 feet, whichever is less, provided that ~~up to 60 percent of the #aggregate width of street walls# facing Surf Avenue~~ such #street walls# are ~~shall be~~ set back a minimum distance of 10 feet from the Surf Avenue #street line#. ~~The remaining portion of such #aggregate width of street walls# facing Surf Avenue shall be set back a minimum distance of 15 feet~~. All portions of #buildings or other structures# that exceed a transition height of 95 feet shall comply with the tower provisions of Section 131-434 (Coney West Subdistrict towers).

**131-432**
**Along all other streets, other than Riegelmann Boardwalk**

The following regulations shall apply along all other #streets# in the Coney West Subdistrict, except within 70 feet of Riegelmann Boardwalk.

* * *

(c) Transition heights

Beyond 100 feet of Surf Avenue, a #street wall# may rise to a maximum transition height of nine #stories# or 95 feet, whichever is less, provided that:

(1) above the maximum base height, #street walls# are ~~up to 60 percent of the #aggregate width of street walls#, measured separately, facing Ocean Way and along all other #streets#, other than~~

~~Riegelmann Boardwalk, shall be~~ set back a minimum distance of 10 feet from the #street line#~~. The remaining portion of such #aggregate width of street walls# facing Ocean Way, and along all other #streets# other than Riegelmann Boardwalk, shall be set back a minimum distance of 15 feet from the #street line#,~~ except that for #blocks# north of the Ocean Way #street line#, along a minimum of one #street line# bounding the #block# (except for Surf Avenue), at least 40 percent of the ~~the remaining portion of such~~ #aggregate width of street walls# shall remain open to the sky for a minimum depth of 100 feet from the #street line#;

* * *

**131-434**
**Coney West Subdistrict towers**

All #stories# of a #building# or portions of other structures located partially or wholly above an applicable transition height shall be considered a "tower" and shall comply with the provisions of this Section.

* * *

(b) Maximum length and height

* * *

Where #affordable housing# is provided pursuant to Section 131-321 (Special floor area regulations for residential uses), the maximum height of a #building# shall be increased to 270 feet, provided that either: ~~the tower complies with either paragraph (b)(1) or (b)(2) of this Section.~~

(1) The outermost wall of all tower #stories# are ~~shall be~~ inscribed within a rectangle where no side of such rectangle exceeds a length of 100 feet; or

(2) The outermost wall of all tower #stories# below a height of 120 feet are ~~shall be~~ inscribed within a rectangle where no side of such rectangle exceeds a length of 130 feet, and above such height, ~~;~~ ~~above a height of 120 feet,~~ no side of such rectangle shall exceed a length of 100 feet. ~~Above~~ In addition, above a height of 120 feet, the maximum floor plate shall be 80 percent of the #story# immediately below such height, or 6,800 square feet, whichever is greater. Such reduced #lot coverage# shall be achieved by one or more setbacks on each face of the tower, where at least one setback on each tower face has a depth of at least five feet and a width that, individually or in the aggregate, is equal to at least 10 percent of the width of each respective tower face.

* * *

**131-44**
**Coney North Subdistrict**

*  *  *

**131-441**
**Coney North Subdistrict, Surf Avenue**

The regulations of this Section shall apply along Surf Avenue. The #street wall# location provisions of paragraph (a) of this Section shall also apply along #streets# intersecting Surf Avenue within 50 feet of Surf Avenue, and the #building# base regulations of paragraph (b) of this Section shall also apply along #streets# within 100 feet of Surf Avenue.

*  *  *

(b) #Building# base

The #street wall# of a #building# base fronting on Surf Avenue shall rise without setback to a minimum height of six #stories# or 65 feet, or the height of the #building#, whichever is less, and a maximum height of eight #stories# or 85 feet, whichever is less, before a setback is required. <u>However, on the portion of the #block# bounded by Stillwell Avenue and West 15th Street, for #buildings# that exceed a height of 85 feet, all #street walls# of such #building# facing Surf Avenue shall rise without setback to a height of 85 feet.</u>

~~For #buildings# that exceed a height of eight #stories# or 85 feet, at least 40 percent of the #aggregate width of street walls# facing Surf Avenue shall not exceed a height of 65 feet without setback, and at least 40 percent of the #aggregate width of street walls# facing Surf Avenue shall rise without setback to a height of at least 80 feet, but not more than 85 feet. However, on the portion of the #block# bounded by Stillwell Avenue and West 15th Street, for #buildings# that exceed a height of 85 feet, all #street walls# of such #building# facing Surf Avenue shall rise without setback to a height of 85 feet.~~

*  *  *

(c) Transition height

Above the maximum base height, a #street wall# may rise to a maximum transition height of nine #stories# or 95 feet, whichever is less, provided that <u>such #street walls# are</u> ~~up to 60 percent of the #aggregate width of street walls# facing Surf Avenue shall be~~ set back a minimum distance of 10 feet from the Surf Avenue #street line#. ~~The remaining portion of such #aggregate width of street walls# facing Surf Avenue shall be set back a minimum distance of 15 feet.~~ All portions of #buildings or other structures# that exceed a transition height of 95 feet shall comply with the tower provisions of Section 131-444 (Coney North Subdistrict towers).

**131-442**
**Along all other streets, other than Stillwell Avenue**

The following regulations shall apply along all other #streets# in the Coney North Subdistrict, other than Stillwell Avenue.

* * *

(c) Transition height

In all portions of #blocks# located beyond 100 feet of Surf Avenue, a #street wall# may rise above the maximum base height to a maximum transition height of eight #stories# or 85 feet, whichever is less, provided that such #street walls# are ~~up to 60 percent of the #aggregate width of street walls# facing Surf Avenue shall be~~ set back a minimum distance of 10 feet from the ~~Surf Avenue~~ #street line#. ~~The remaining portion of such #aggregate width of street walls# facing Surf Avenue shall be set back a minimum distance of 15 feet.~~ All portions of #buildings or other structures# that exceed a transition height of 85 feet shall comply with the tower provisions of Section 131-444 (Coney North Subdistrict towers).

* * *

**131-444**
**Coney North Subdistrict towers**

All #stories# of a #building# or portions of other structures located partially or wholly above a height of 85 feet within 175 feet of Surf Avenue and above a height of 65 feet beyond 175 feet of Surf Avenue shall be considered a “tower” and shall comply with the provisions of this Section.

* * *

(b) Maximum length and height

* * *

Where #affordable housing# is provided pursuant to Section 131-321 (Special floor area regulations for residential uses), the maximum height of a #building# shall be increased to 270 feet, provided that either: ~~the tower portion of such #building# complies with either paragraph (b)(1) or (b)(2) of this Section.~~

(1) The outermost wall of all tower #stories# are ~~shall be~~ inscribed within a rectangle, where no side of such rectangle shall exceed a length of 100 feet; or

(2) The outermost wall of all tower #stories#, below a height of 120 feet, are ~~shall be~~ inscribed within a rectangle, where no side of such rectangle shall exceed a length of 130 feet, and above such height, ~~; above a height of 120 feet,~~ no side of such rectangle shall exceed a length of 100 feet. In addition, above ~~Above~~ a height of 120 feet, the maximum floorplate shall be 80 percent of the #story# immediately below such height or 6,800 square feet, whichever is greater. Such reduced

#lot coverage# shall be achieved by one or more setbacks on each face of the tower, where at least one setback on each tower face has a depth of at least five feet and a width that, individually or in the aggregate, is equal to at least 10 percent of the width of each respective tower face.

* * *

**131-47**
**Design Requirements for Ground Level Setbacks**

Wherever a #building# base below a tower is set back from the #street line#, and the #building# walls bounding such setback area are occupied by non-#residential uses#, such setback area shall comply with the provisions of this Section. Where two such setback areas adjoin one another at the intersection of two #streets#, the combined area of such spaces shall determine the applicability of such provisions.

* * *

(c) Wall treatments

All ground floor level #building# walls bounding such setback area not otherwise subject to the transparency requirements of Section 131-15, shall comply with the provisions of either paragraphs (c)(1) or (c)(2) of this Section.

(1) If such #building# wall is a #street wall# wider than 10 feet, such #street wall# shall comply with the provisions of Section 131-15.

(2) All other #building# walls shall comply with one of the following provisions:

(i) such #building# walls shall be glazed with transparent materials in accordance with the transparency provisions of Section 37-34 (Minimum Transparency Requirements), except that such transparency shall be measured from ~~which may include show windows, glazed transoms or glazed portions of doors. Such glazing shall occupy at least 50 percent of the area of each such ground floor level #building# wall, measured to a height of 10 feet above~~ the level of the adjoining sidewalk, public access area or #base plane#, whichever is higher; or

(ii) such #building# walls shall be articulated with artwork or landscaping to a height of at least ten feet.

* * *

**131-50**
**OFF-STREET PARKING AND LOADING REGULATIONS**

The special provisions of this Section shall apply to all off-street parking spaces and loading facilities within the #Special Coney Island District#.

* * *

**131-52**
**Use and Location of Parking Facilities**

The following provisions shall apply to all parking facilities:

* * *

(c) All off-street parking facilities shall be located within facilities that, except for entrances and exits, are:

(1) entirely below the level of any #street# or #publicly accessible open area# upon which such facility, or portion thereof, fronts; or

(2) wrapped by #floor area# or screened in accordance with the provisions of Section 37-35 (Parking Wrap and Screening Requirements). For the purpose of applying such provisions, Surf Avenue, Stillwell Avenue, Ocean Way, Parachute Way, and the Riegalmann Boardwalk shall be considered designated retail streets, and the wrapping provisions of paragraph (a) shall apply to such #street# frontages at all levels above grade. ~~located, at every level above grade, behind #commercial#, #community facility# or #residential floor area# with a minimum depth of 15 feet as measured from the #street wall# of the #building#, so that no portion of such parking facility is visible from adjoining #streets# or publicly accessible open spaces.~~ All such parking facilities shall be exempt from the definition of #floor area#. ~~However, in the Coney East Subdistrict, the provisions of this paragraph, (c)(2), need not apply on the north side of Surf Avenue above the level of the ground floor, on Parcel 2 beyond 70 feet of Riegelmann Boardwalk, or on the east side of that portion of West 16th Street beyond 50 feet of Surf Avenue and Wonder Wheel Way, provided that:~~

~~(i) any non-horizontal parking deck structures shall not be visible from the exterior of the #building# in elevation view;~~

~~(ii) opaque materials are located on the exterior #building# wall between the bottom of the floor of each parking deck and no less than three feet above such deck; and~~

~~(iii) a total of at least 50 percent of such exterior #building# wall with adjacent parking spaces consists of opaque materials which may include #signs#, graphic or sculptural art, or living plant material.~~

* * *

# Article XIII - Special Purpose Districts

**Chapter 2**
**Special Enhanced Commercial District**

**132-00**
**GENERAL PURPOSES**

The "Special Enhanced Commercial District," established in this Resolution, is designed to promote and protect public health, safety and general welfare. These general goals include, among others, the promotion and maintenance of a lively and engaging pedestrian experience along commercial avenues and the following specific purposes:

(a) in "Special Enhanced Commercial District" 1, to enhance the vitality of emerging commercial districts ensuring that a majority of the ground floor space within buildings is occupied by commercial establishments that enliven the pedestrian experience along the street;

(b) in "Special Enhanced Commercial District" 2, to enhance the vitality of well-established commercial districts by ensuring that ground floor frontages continue to reflect the multi-store character that defines such commercial blocks;

(c) in "Special Enhanced Commercial District" 3, to enhance the vitality of well-established commercial districts by limiting the ground floor presence of inactive street wall frontages;

(d) in "Special Enhanced Commercial District" 4, to enhance the vitality of commercial districts by limiting the ground floor presence of inactive street wall frontages; and

(e) to promote the most desirable use of land in the area and thus preserve, protect and enhance the value of land and buildings and thereby protect City tax revenues.

* * *

**132-20**
**SPECIAL USE REGULATIONS**

* * *

**132-21**
**Applicability of Use Regulations**

*  *  *

~~In addition, in all #Special Enhanced Commercial Districts#, the applicable special #use# provisions indicated in the table in Section 132-13 shall not apply to any #community facility building# used exclusively for either a #school#, as listed in Use Group 3, or a house of worship, as listed in Use Group 4.~~

*  *  *

**132-22**
**Mandatory Ground Floor Uses**

In the applicable #Special Enhanced Commercial Districts# indicated in the table in Section 132-13 (Applicability of Special Use, Transparency and Parking Regulations), the following provisions shall apply to the #ground floor level street walls# of #buildings# fronting along a #designated commercial street#. For #buildings# fronting along multiple #streets#, the required percentage of #ground floor level street wall# allocated to certain #uses#, as set forth in this Section, shall apply only to the portion of the #building's ground floor level# fronting upon a #designated commercial street#.

(a) Minimum percentage of #commercial uses#

Mandatory #commercial use# regulations shall apply to an area of a #building's ground floor level# defined by an aggregate width equal to at least 50 percent of a #building's street wall# along a #designated commercial street# and a depth equal to at least 30 feet, as measured from the #street wall# along the #designated commercial street#. Such an area on the #ground floor level# shall be occupied by #commercial uses# listed in Use Groups 5, 6A, 6C excluding banks and loan offices, 7B, 8A, 8B or 9A.

*  *  *

(c) Other permitted #uses#

In the applicable #Special Enhanced Commercial Districts#, ~~the following #uses#~~ Type 1 lobbies, entrances and exits to #accessory# parking facilities and entryways to subway stations, where applicable, shall be permitted on the #ground floor level# of a #building# along a #designated commercial street#, in accordance with the provisions of Section 37-33 (Maximum Width of Certain Uses). ~~only as follows:~~

~~(1) #residential# lobbies, and an associated vertical circulation core, shall be permitted on the #ground floor level#, provided that such lobbies comply with the maximum width provisions of paragraph (c) of Section 132-24 (Maximum Width Restrictions). In addition, the 30 foot depth requirement for #commercial uses# set forth in paragraph (a) of this Section, where applicable, may be encroached upon where necessary to accommodate a vertical circulation core associated with such #residential# lobby; and~~

~~(2) #accessory# off-street parking spaces and entrances and exits shall be permitted on the #ground floor level#, provided that such off-street parking spaces and associated entrances and exits comply with the provisions of Section 132-40 (SPECIAL PARKING REGULATIONS).~~

**132-23**
**Minimum Number of Establishments**

In the applicable #Special Enhanced Commercial Districts# indicated in the table in Section 132-13 (Applicability of Special Use, Transparency and Parking Regulations), the following provisions shall apply to the #ground floor level# of all #buildings# with #street# frontage along a #designated commercial street#.

For #zoning lots# with a #lot width# of 50 feet or more, as measured along the #street line# of the #designated commercial street#, a minimum of two non-#residential# establishments shall be required for every 50 feet of #street# frontage. In addition, each such #ground floor level# establishment shall comply with the minimum depth requirements of Section 37-32 (Ground Floor Depth Requirements for Certain Uses). ~~have an average depth equal to at least 30 feet, as measured from the #street wall# along the #designated commercial street#. However, such depth requirement may be reduced where necessary in order to accommodate a vertical circulation core associated with a #residential# lobby.~~

**132-24**
**Maximum Street Wall Width**

In the applicable #Special Enhanced Commercial Districts# indicated in the table in Section 132-13 (Applicability of Special Use, Transparency and Parking Regulations), the following provisions shall apply to the #ground floor level# of all #buildings# with #street# frontage along a #designated commercial street#.

(a) Banks and loan offices

In the applicable #Special Enhanced Commercial Districts#, within 30 feet of a #building's street wall# along a #designated street#, the maximum #street wall# width of a bank or loan office, as listed in Use Group 6C, on a #ground floor level# shall not exceed 25 feet.

(b) Other non-#residential# establishments

In the applicable #Special Enhanced Commercial Districts#, the maximum #street wall# width of any non-#residential ground floor level# establishment, other than a bank or loan office, shall not exceed 40 feet, as measured along the #street line# of a #designated commercial street#.

~~(c) #Residential# lobbies~~

~~In the applicable #Special Enhanced Commercial Districts#, the maximum #street wall# width of any~~

~~#ground floor level residential# lobby shall not exceed 25 feet, as measured along the #street line# of a #designated commercial street#.~~

**132-30**
**SPECIAL TRANSPARENCY REGULATIONS**

The special transparency regulations of this Section, inclusive, shall apply to #buildings# in the #Special Enhanced Commercial Districts# indicated in the table in Section 132-13 (Applicability of Special Use, Transparency and Parking Regulations), except as otherwise provided in Section 132-31.

**132-31**
**Applicability of Transparency Regulations**

In #Special Enhanced Commercial Districts#, the special transparency provisions indicated in the table in Section 132-13 shall apply to #developments# and to #buildings enlarged# on the #ground floor level#, where such #ground floor level# fronts on a #designated commercial street#, except that such provisions shall not apply:

(a) to #zoning lots# in #Commercial Districts# with a width of less than 20 feet, as measured along the #street line# of a #designated commercial street#, provided such #zoning lots# existed on:

(1) November 29, 2011, for #Special Enhanced Commercial District# 1;

(2) June 28, 2012, for #Special Enhanced Commercial Districts# 2 and 3; and

(3) October 11, 2012, for #Special Enhanced Commercial District# 4;

~~(b) to any #community facility building# used exclusively for either a #school#, as listed in Use Group 3, or a house of worship, as listed in Use Group 4; and~~

~~(c)~~(b) in #Special Enhanced Commercial Districts# 1 and 4, to #buildings# in #Residence Districts# where the #ground floor level# contains #dwelling units# ~~or #rooming units#~~.

**132-32**
**Ground Floor Level Transparency Requirements**

In the applicable #Special Enhanced Commercial Districts#, as indicated in the table in Section 132-13 (Applicability of Special Use, Transparency and Parking Regulations), the special transparency regulations of ~~this~~ Section 37-34 (Minimum Transparency Requirements) shall apply to the #ground floor level street walls# of #buildings# fronting along a #designated commercial street#. ~~For #buildings# fronting along multiple #streets#, the required percentage of #ground floor level street wall# allocated to transparent materials, as set forth in this~~

~~Section, shall apply only to the portion of the #building's ground floor level# fronting upon a #designated commercial street#.~~

~~The #ground floor level street wall# shall be glazed with transparent materials which may include #show windows#, transom windows or glazed portions of doors. Such transparent materials may be provided anywhere on such #ground floor level street wall#, except that:~~

~~(a) transparent materials shall occupy at least 50 percent of the surface area of such #ground floor level street wall# between a height of two feet and 12 feet, or the height of the ground floor ceiling, whichever is higher, as measured from the adjoining sidewalk. Transparent materials provided to satisfy such 50 percent requirement shall:~~

~~(1) not begin higher than 2 feet, 6 inches, above the level of the adjoining sidewalk, with the exception of transom windows, or portions of windows separated by mullions or other structural dividers; and~~

~~(2) have a minimum width of two feet; and~~

~~(b) the maximum width of a portion of the #ground floor level street wall# without transparency shall not exceed ten feet.~~

~~However, where an entrance to an off-street parking facility is permitted on a #designated commercial street# in accordance with the provisions of Section 132-43 (Curb Cut Requirements), the transparency requirements of this Section shall not apply to the portion of the #ground floor level street wall# occupied by such entrance.~~

**132-40**
**SPECIAL PARKING REGULATIONS**

* * *

**132-42**
**Locations of Parking Spaces**

In the applicable #Special Enhanced Commercial Districts#, as indicated in the table in Section 132-13 (Applicability of Special Use, Transparency and Parking Regulations), the following provisions shall apply to the ground floor of all #buildings# with #street# frontage along a #designated commercial street#.

All off-street parking spaces shall be located within a #completely enclosed building#, and shall be wrapped by #floor area# or screened in accordance with the provisions of Section 37-35 (Parking Wrap and Screening Requirements), as applicable.

~~Enclosed, off-street parking spaces shall be permitted on the ground floor of a #building# only where they are located beyond 30 feet of such #building's street wall# along a #designated commercial street#.~~ Entrances to such

spaces along a #designated commercial street# shall be permitted only where a curb cut is allowed in accordance with the provisions of Section 132-43.

*  *  *

# Article XIII - Special Purpose Districts

**Chapter 3**
**Special Southern Roosevelt Island District**

**133-00**
**GENERAL PURPOSES**

The "Special Southern Roosevelt Island District" established in this Resolution is designed to promote and protect public health, safety and general welfare. These general goals include, among others, the following specific purposes:

(a) providing opportunities for the development of an academic and research and development campus in a manner that benefits the surrounding community;

(b) allowing for a mix of residential, retail and other commercial uses to support the academic and research and development facilities and complementing the urban fabric of Roosevelt Island;

(c) establishing a network of publicly-accessible open areas that take advantage of the unique location of Roosevelt Island and that integrate the academic campus into the network of open spaces on Roosevelt Island and provide a community amenity;

(d) strengthening visual and physical connections between the eastern and western shores of Roosevelt Island by establishing publicly-accessible connections through the Special District and above-grade view corridors;

(e) encouraging alternative forms of transportation by eliminating required parking and placing a maximum cap on permitted parking;

(f) providing flexibility of architectural design within limits established to assure adequate access of light and air to the street and surrounding waterfront open areas, and thus to encourage more attractive and innovative building forms; and

(g) promoting the most desirable use of land in this area and thus conserving the value of land and buildings, and thereby protecting the City's tax revenues.

* * *

**133-20**
**SPECIAL BULK REGULATIONS**

Within the #development parcel#, the special #bulk# regulations of this Section, inclusive, shall apply.

**133-21**
**Floor Area Ratio**

The #floor area# provisions of ~~Section 23-14 (Minimum Required Open Space, Open Space Ratio, Maximum Lot Coverage and Maximum Floor Area Ratio),~~ Section 23-15 (Open Space and Floor Area Regulations in R6 through R10 Districts) shall be modified to permit a maximum #residential floor area ratio# of 3.44 without regard to a #height factor#. In addition, the maximum permitted #floor area ratio# for a Use Group 17B research, experimental or testing laboratory shall be 3.40.

**133-22**
**Lot Coverage**

The #open space ratio# requirements of ~~Section 23-14 (Minimum Required Open Space, Open Space Ratio, Maximum Lot Coverage and Maximum Floor Area Ratio)~~ Section 23-15 (Open Space and Floor, Area Regulations in R6 through R10 Districts) and the #lot coverage# requirements of Sections ~~23-14~~ 23-15 and 24-11 (Maximum Floor Area Ratio and Percentage of Lot Coverage) shall not apply. In lieu thereof, the aggregate #lot coverage# for all #buildings# shall comply with the following requirements.

(a) The maximum #lot coverage# from the #base plane# to a height that is 20 feet above the #base plane# shall be 70 percent.

(b) The maximum #lot coverage# from a height that is more than 20 feet above the #base plane# to a height that is 60 feet above the #base plane# shall be 60 percent.

(c) The maximum #lot coverage# from a height that is more than 60 feet above the #base plane# to a height that is 180 feet above the #base plane# shall be 45 percent.

(d) The maximum #lot coverage# above a height of 180 feet above the #base plane# shall be 25 percent.

The City Planning Commission may authorize an increase in the maximum #lot coverage# as set forth in paragraph (c) of this Section to up to 55 percent, upon finding that such increase is necessary to achieve the programmatic requirements of the development, and will not unduly restrict access of light and air to publicly-accessible areas and #streets#.

* * *

# Appendix I: Transit Zone

The #Transit Zone# includes all of Manhattan Community Districts 9, 10, 11 and 12; Bronx Community Districts 1, 2, 3, 4, 5, 6 and 7; and Brooklyn Community Districts 1, 2, 3, 4, 6, 7, 8, 9, 12, 13 and 16. Portions of other Community Districts in a #Transit Zone# are shown on the maps in this APPENDIX.

[New map to be added]

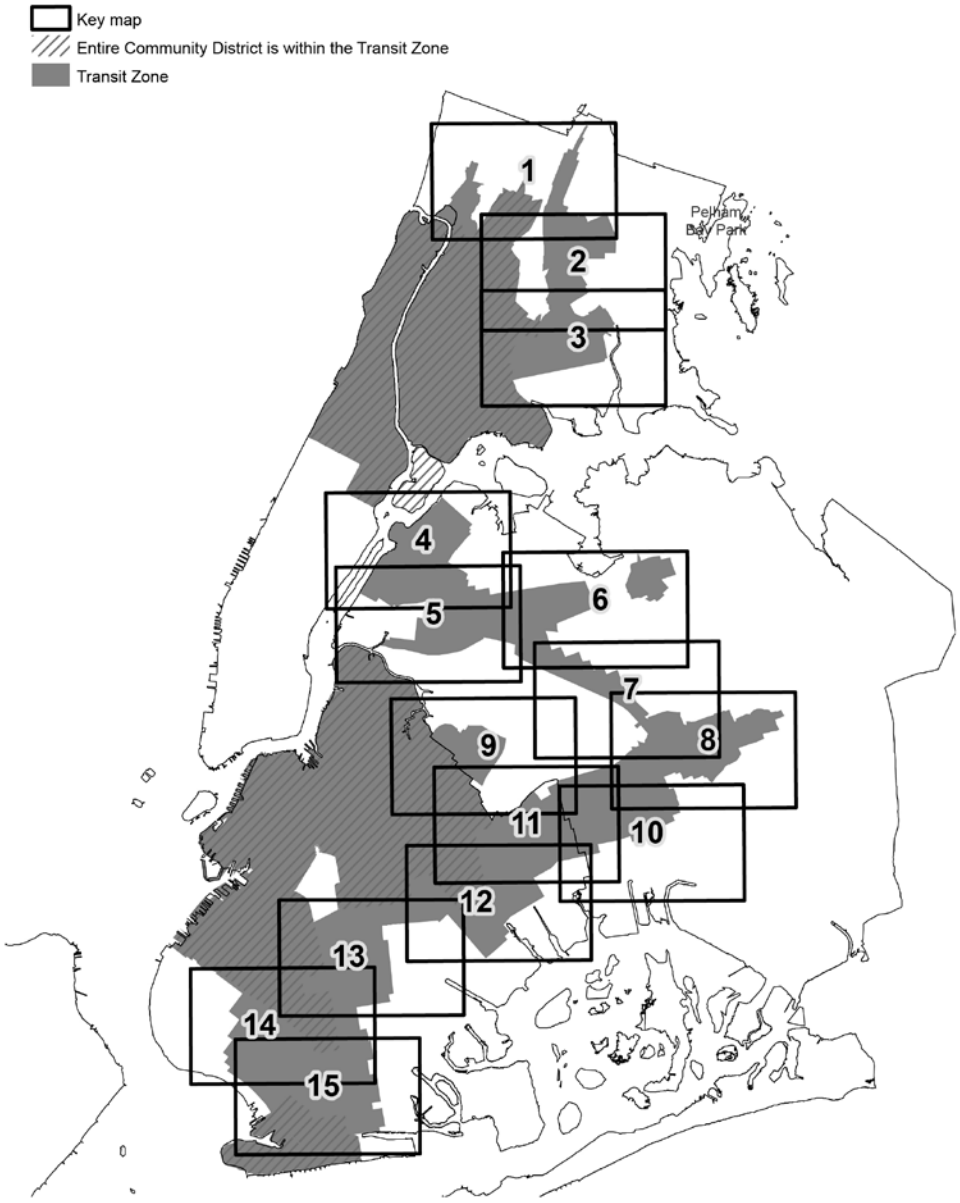

Key Map 1

[New map to be added]

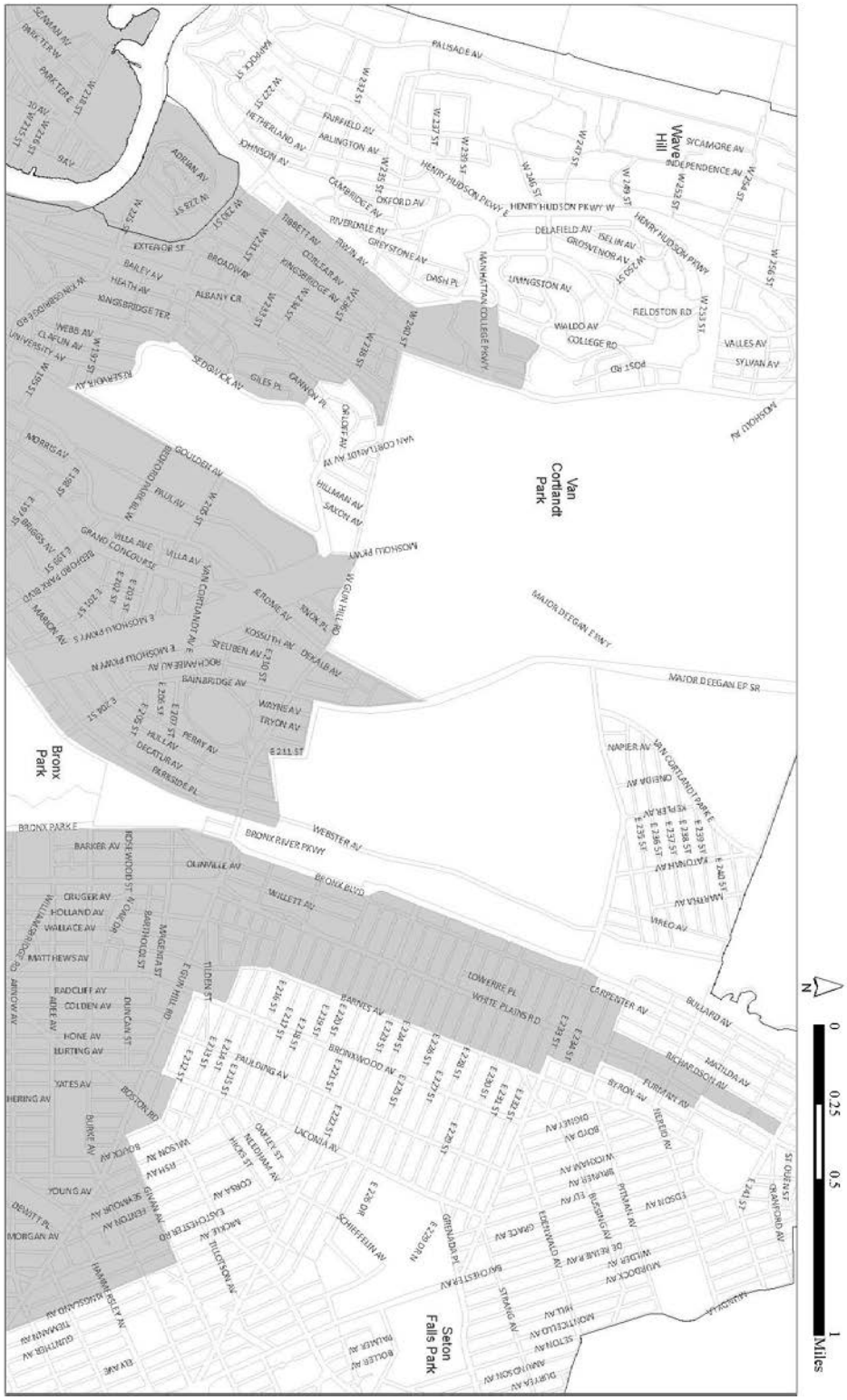

Key Map 2

[New map to be added]

Key Map 3

[New map to be added]

Key Map 4

[New map to be added]

Key Map 5

[New map to be added]

Key Map 6

[New map to be added]

Key Map 7

[New map to be added]

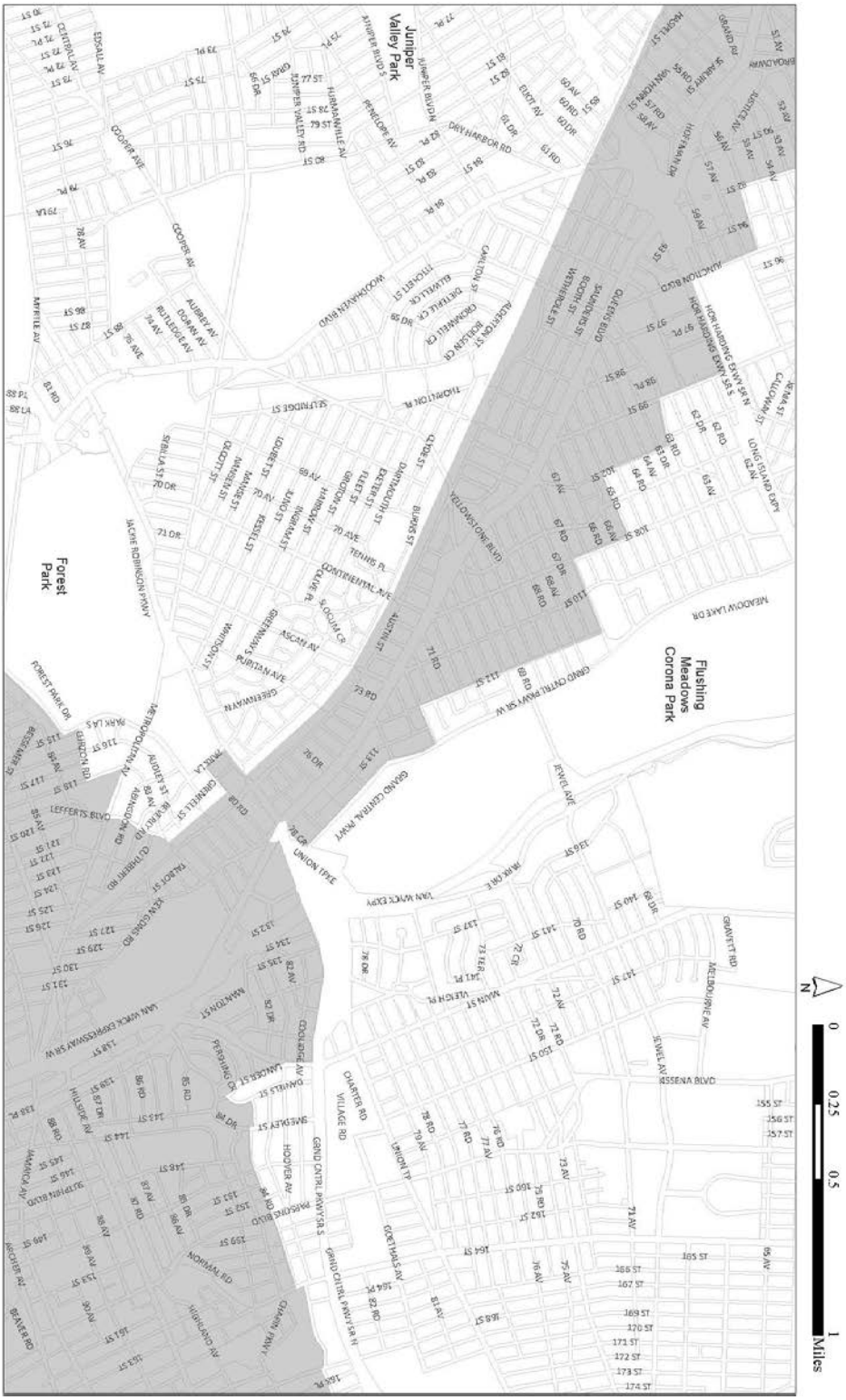

Key Map 8

[New map to be added]

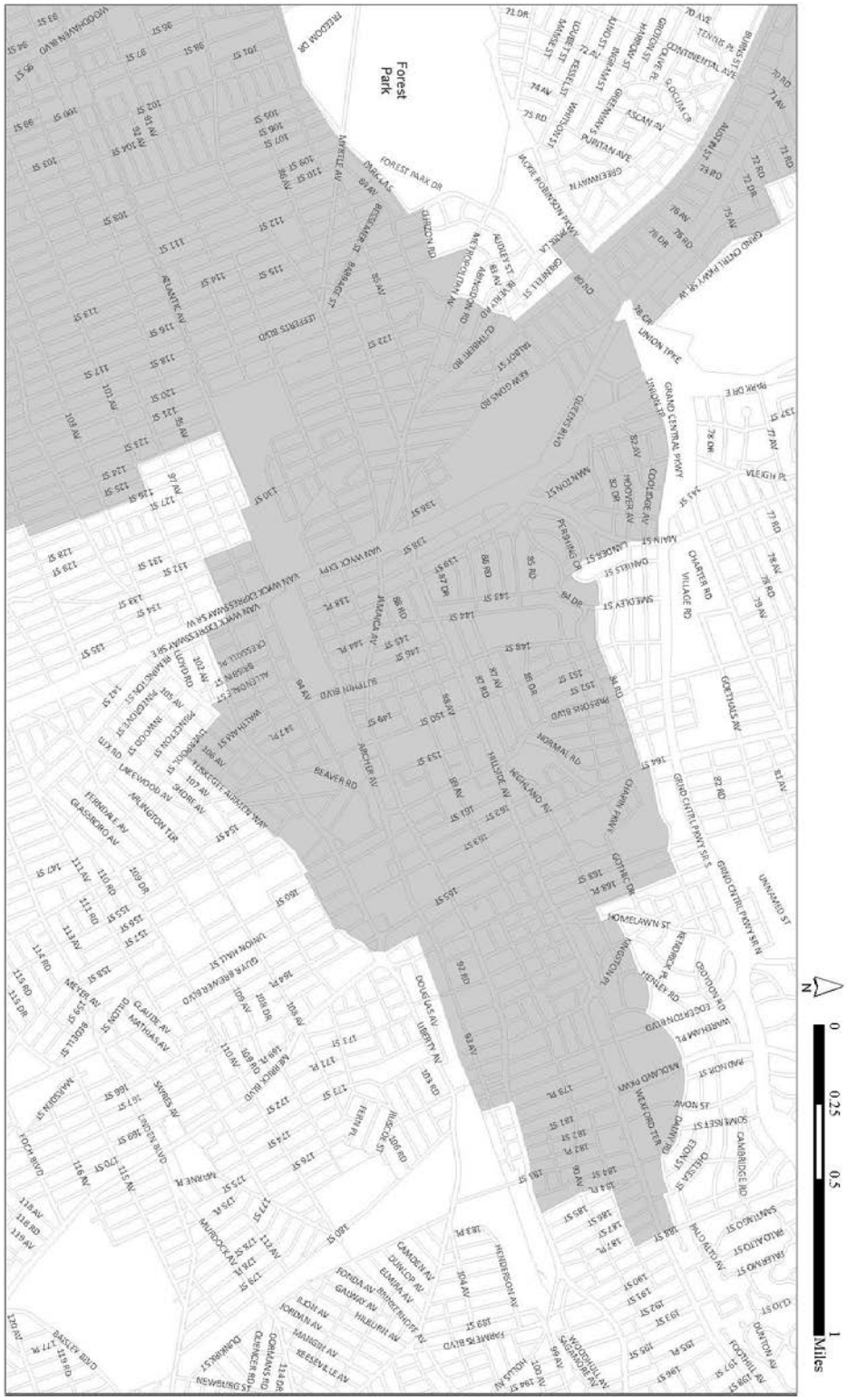

Key Map 9

[New map to be added]

Key Map 10

[New map to be added]

Key Map 11

[New map to be added]

Key Map 12

[New map to be added]

Key Map 13

[New map to be added]

Key Map 14

[New map to be added]

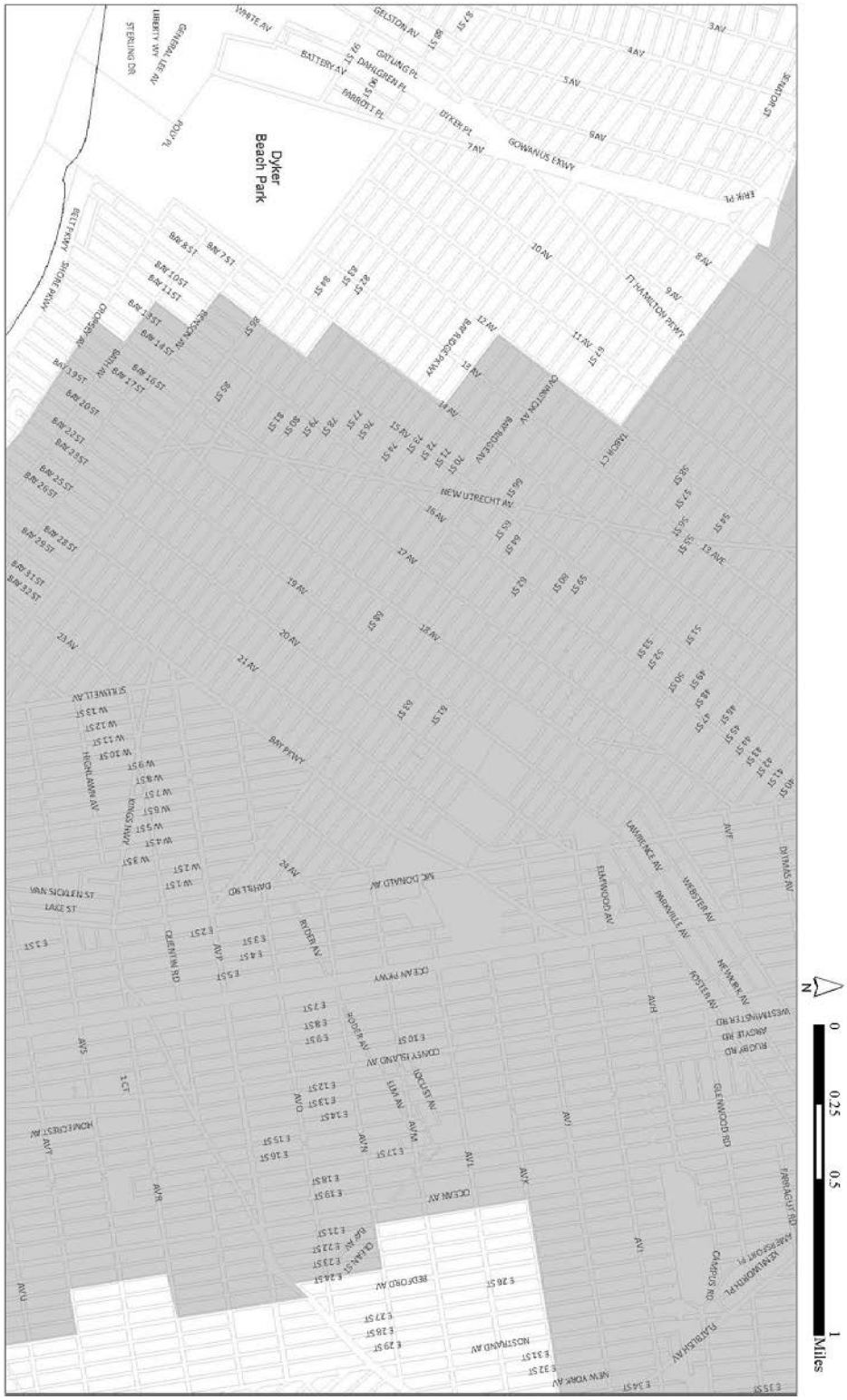

Key Map 15

[New map to be added]

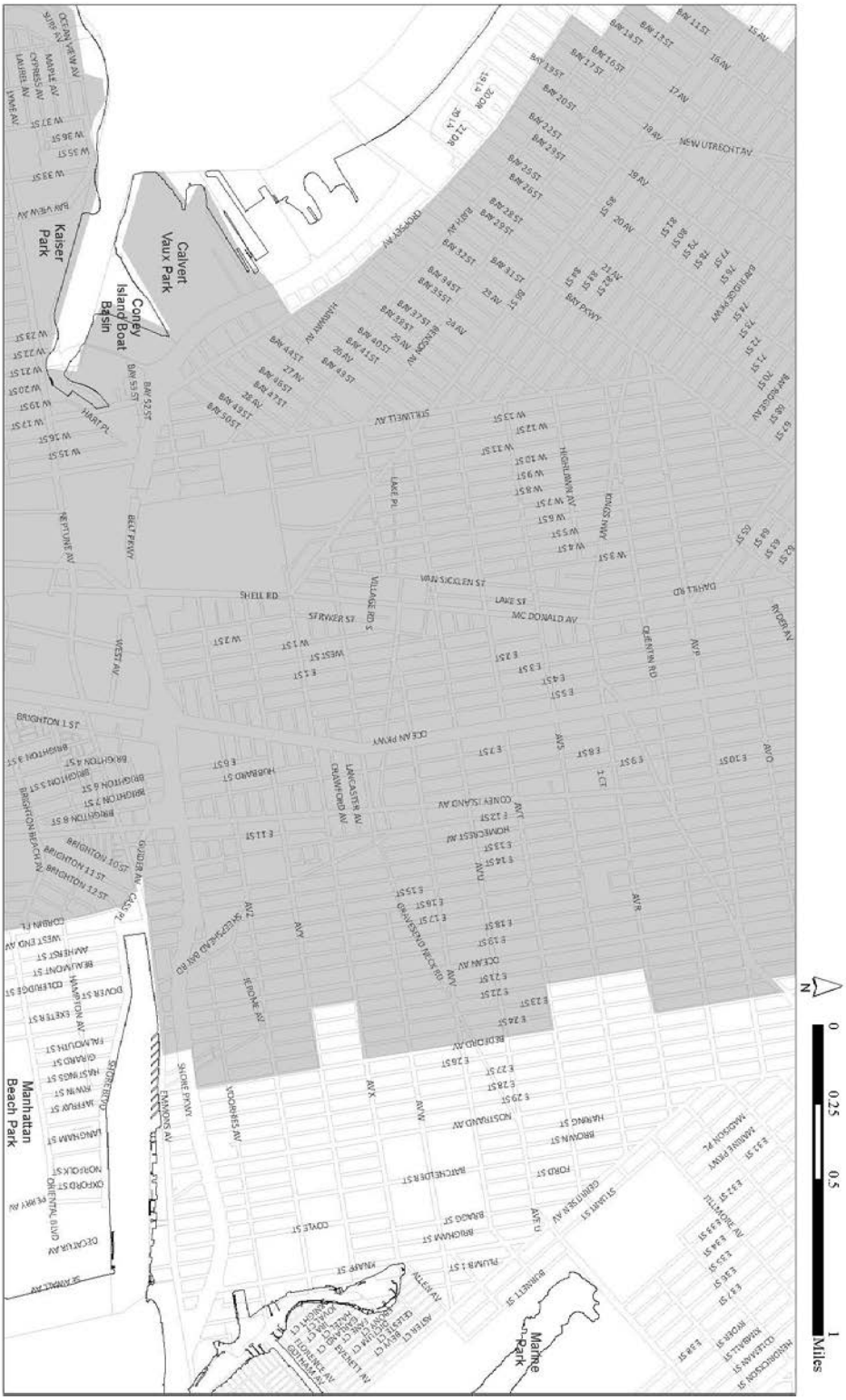

END