KEY TERMS CLARIFICATION ZONING TEXT AMENDMENT (N110090(A) ZRY)
Enacted by the City Council: February 2, 2011

Matter Underlined is new, to be added;
Matter in ~~Strikeout~~ is old, to be deleted;
Matter within # # is defined in Section 12-10;

Article I, Chapter 1

* * *

11-10
ESTABLISHMENT AND SCOPE OF CONTROLS, ESTABLISHMENT OF DISTRICTS, AND INCORPORATION OF MAPS

11-11
Establishment of Control over Use and Bulk

11-111
~~**For new uses**~~
Applicability of this Resolution

In all districts, after December 15, 1961, any #zoning lot# or other tract of land, as applicable, and anything therein or thereupon, including any #development, enlargement, extension#, change of #use#, new or existing #use, conversion#, alteration, site alteration, relocation, reconstruction and any ~~new~~ #building or other structure# ~~or any tract of land shall be used, constructed or #developed# only in accordance with the #use#, #bulk# and all other applicable~~ shall be subject to the regulations of this Resolution; and shall continue to be subject to the provisions of this Resolution in effect at the time of such #development#, #enlargement#, establishment of or change of #use, conversion#, alteration, site alteration, relocation or reconstruction, unless such provisions are modified by an amendment of this Resolution applicable to #buildings or other structures# or #uses# existing at the time of such amendment.

Where an existing #use# or #building or other structure# is #non-conforming# or #non-complying#, the provisions of Article V (Non-Conforming Uses and Non-Complying Buildings) may apply.

~~**11-112**~~
~~**For existing uses**~~

~~In all districts, after December 15, 1961, and except as otherwise provided in Article V (Non-Conforming Uses and Non-Complying Buildings):~~

~~(a) the #use# of any existing #building or other structure# may be continued, changed, or #extended#;~~

~~(b) the #use# of any existing tract of land may be continued, changed, or #enlarged#; or~~

~~(c) any existing #building or other structure# may be #enlarged#, altered, converted, reconstructed, or relocated;~~

~~only in accordance with the #use#, #bulk#, and all other applicable regulations of this Resolution.~~

11-12
Establishment of Districts

11-121

District names

Each zoning district is designated by a letter indicating the general land use classification – R for Residential, C for Commercial and M for Manufacturing – followed by one or two numbers and, sometimes, a letter suffix. In residence districts, generally, the higher the first number, the greater the density permitted and the larger the building. Parking requirements usually decrease as density increases. A second number, following a hyphen (such as R3-1 or R3-2), denotes variations in use, bulk or parking regulations among districts within a common density category. In commercial and manufacturing districts, the first number denotes the intensity of permitted uses; the higher the first number, generally, the broader the scope of uses that are permitted and the more significant the land use impact of such uses. The second number, following a hyphen, denotes differences in bulk or parking regulations within a common use category. The higher the second number, generally, the larger the building permitted and/or the lower the parking requirements. Letter suffixes have been added to the designations of certain districts (such as R10A) to indicate contextual counterparts that seek to maintain, enhance, or establish new neighborhood characteristics or building scale.

11-122
Districts established

In order to carry out the purposes and provisions of this Resolution, the following districts are hereby established:

* * *

M3-2 Heavy Manufacturing District (Low Performance)

Special Purpose Districts

Establishment of the Special 125th Street District

In order to carry out the special purposes of this Resolution as set forth in Article IX, Chapter 7, the #Special 125th Street District# is hereby established.

* * *

11-123
Special Purpose Districts

For the Special Purpose Districts listed in Section 11-122 (Districts established), each Special Purpose District appears on the #zoning maps# superimposed on other districts and its regulations supplement or modify those of the districts upon which it is superimposed.

* * *

11-23
Demolition and Replacement

The alteration of an existing #building# resulting in both the removal of more than 75 percent of the #floor area# and more than 25 percent of the perimeter walls of such existing #building#, and the replacement of any amount of #floor area#, shall be considered a #development# for the purposes of the following provisions. The provisions of this Section shall apply notwithstanding the provisions of Article V (Non-Conforming Uses And Non-Complying Buildings). However, these provisions shall not apply where the #building# to be replaced is a #single-# or #two-family residence# utilizing the provisions of Article V.

Section 23-03 (Street Tree Planting in Residence Districts)
Section 23-04 (Planting Strips in Residence Districts)
Section 33-03 (Street Tree Planting in Commercial Districts)
Section 37-35 (Retail Continuity)
Section 37-40 (OFF-STREET RELOCATION OR RENOVATION OF A SUBWAY

	STAIR)
Section 81-42	(Retail Continuity along Designated Streets)
Section 81-46	(Off-Street Relocation or Renovation of a Subway Stair)
Section 81-72	(Use Regulations Modified)
Section 82-12	(Mandatory Off-Street Relocation of a Subway Stair)
Section 82-23	(Street Wall Transparency)
Section 91-12	(Uses on Designated Retail Streets)
Section 91-41	(Regulations for Designated Retail Streets)
Section 91-43	(Off-Street Relocation or Renovation of a Subway Stair)
Section 93-14	(Ground Floor Level Requirements)
Section 93-65	(Transit Easements)
Section 93-66	(Open Area Requirements in the Large-Scale Plan Subdistrict A)
Section 93-70	(PUBLIC ACCESS REQUIREMENTS FOR SPECIAL SITES)
Section 95-03	(Transit Easement)
Section 95-04	(Certification of Transit Easement Volume)
Section 95-08	(Special Use Regulations)
Section 97-12	(Arts and Entertainment Use Requirement)
Section 97-22	(Uses Not Permitted on the Ground Floor of Buildings)
Section 97-23	(Transparency Requirements)
Section 98-14	(Ground Floor Use and Transparency Requirements on Tenth Avenue)
Section 98-53	(Required Open Areas on the East Side of the High Line)
Section 98-54	(Transparency Requirements on the East Side of the High Line)
Section 98-60	(SPECIAL ACCESS REGULATIONS FOR CERTAIN ZONING LOTS)
Section 101-11	(Special Ground Floor Use Regulations)
Section 101-12	(Transparency Requirements)
Section 101-43	(Off-street Relocation or Renovation of a Subway Stair)
Section 108-30	(MODIFICATION OF STREET TREE REQUIREMENTS)
Section 109-132	(Treatment of the ground level wall)
Section 109-21	(Use Regulations)
Section 109-33	(Special Front Wall Regulations)
Section 115-14	(Transparency Requirement in C4-5X and C6 Districts)
Section 116-12	(Mandatory Ground Floor Use and Frontage Requirements)
Section 116-13	(Transparency Requirements)
Section 117-31	(Special Use Regulations)
Section 117-42	(Special Bulk and Use Regulations in the Court Square Subdistrict)
Section 117-44	(Mandatory Subway Improvements)
Section 117-45	(Developer's Notice)
Section 117-513	(Transparency requirement)
Section 117-553	(Mandatory sidewalk widening and ground floor uses) paragraph (b)
Section 118-40	(ENTRANCE AND STREET WALL TRANSPARENCY REQUIREMENTS)
Section 118-60	(OFF-STREET RELOCATION OF A SUBWAY STAIR WITHIN THE SPECIAL UNION SQUARE DISTRICT)
Section 119-112	(Tier I tree planting requirements)
Section 119-216	(Tier II tree planting requirements)
Section 122-50	(SPECIAL PROVISIONS FOR PLANTING STRIPS)
Section 124-30	(MANDATORY IMPROVEMENTS)
Section 124-40	(PUBLICLY ACCESSIBLE OPEN SPACE REQUIREMENTS)
Section 126-21	(Street Tree Planting)

* * *

11-30
BUILDING PERMITS ISSUED BEFORE EFFECTIVE DATE OF AMENDMENT

11-31
General Provisions

For the purposes of Section 11-33, relating to Building Permits Issued Before Effective Date of Amendment to this Resolution, the following terms and general provisions shall apply:

(a) A lawfully issued building permit shall be a building permit which is based on an approved application showing complete plans and specifications, authorizes the entire construction and not merely a part thereof, and is issued prior to any applicable amendment to this Resolution.

In case of dispute as to whether an application includes "complete plans and specifications" as required in this Section, the Commissioner of Buildings shall determine whether such requirement has been met.

(b) The rights set forth in these Sections shall be retained only if all modifications, made in such plans after the effective date of any applicable amendment to this Resolution, do not create a new #non-compliance# or #non-conformity# or increase the degree of #non-compliance# or #non-conformity# with the provisions of this Resolution, as amended.

(c) <u>For the purposes of this paragraph (c), #abutting buildings# on a single #zoning lot# shall be considered to be a single #building#.</u> As used in Section 11-33 (Building Permits for Minor or Major Development or Other Construction Issued Before Effective Date of Amendment):

(1) "Minor development" shall include:

(i) construction of any single #building# which will be #non-conforming# or #non-complying# under the provisions of any applicable amendment to this Resolution<u>;</u> or

(ii) construction of two or more #buildings# on a single #zoning lot# which under the provisions of any applicable amendment to this Resolution will be #non-conforming#; or

(iii) construction of two or more #buildings# on contiguous #zoning lots# or #zoning lots# which would be contiguous except for their separation by a #street# or #street# intersection; and

(a) have been planned as a unit evidenced by a site plan for all such #zoning lots# filed with, and approved by, the Department of Buildings prior to the effective date of the applicable amendment; and

(b) will be #non-conforming# under the provisions of any applicable amendment to this Resolution; or

(iv) a major #enlargement#, which is an #enlargement# requiring the installation of foundations and involving at least 50 percent of the total #floor area# of such #enlarged building#, and which #enlargement# will be #non-conforming# or #non-complying# under the provisions of any applicable amendment to this Resolution. For the purposes of Section 11-33 (Building Permits for Minor or Major Development or Other Construction Issued before Effective Date of Amendment) only, a major #enlargement# shall also include any other #enlargement# adding at least 50,000 square feet to the #floor area# of an existing #building#, which #enlargement# will be #non-conforming# or #non-complying# under the provisions of any applicable amendment to this Resolution.

(2) "Major development" shall include:

(i) construction of two or more #buildings# on a single #zoning lot# which will be #non-complying# under the provisions of any applicable amendment to this Resolution; or

(ii) construction of two or more #buildings# on contiguous #zoning lots# or

#zoning lots# which would be contiguous except for their separation by a #street# or #street# intersection; and

(a) have been planned as a unit evidenced by a site plan for all such #zoning lots# filed with, and approved by, the Department of Buildings prior to the effective date of the applicable amendment; and

(b) will be #non-complying# under the provisions of any applicable amendment to this Resolution.

(3) "Other construction" shall include:

(i) any #enlargement# other than a major #enlargement#; or

(ii) any #extension#, #conversion# or structural alteration; or

(iii) construction of any structure other than a #building#;

which will be #non-conforming# or #non-complying# under the provisions of any applicable amendment to this Resolution.

* * *

11-331
Right to construct if foundations completed

If, before the effective date of an applicable amendment of this Resolution, a building permit has been lawfully issued as set forth in Section 11-31 paragraph (a), to a person with a possessory interest in a #zoning lot#, authorizing a minor development or a major development, such construction, if lawful in other respects, may be continued provided that:

(a) in the case of a minor development, all work on foundations had been completed prior to such effective date; or

(b) in the case of a major development, the foundations for at least one #building# ~~of the #development#~~ had been completed prior to such effective date.

In the event that such required foundations have been commenced but not completed before such effective date, the building permit shall automatically lapse on the effective date and the right to continue construction shall terminate. An application to renew the building permit may be made to the Board of Standards and Appeals not more than 30 days after the lapse of such building permit. The Board may renew the building permit and authorize an extension of time limited to one term of not more than six months to permit the completion of the required foundations, provided that the Board finds that, on the date the building permit lapsed, excavation had been completed and substantial progress made on foundations.

* * *

11- 338
Building permits issued before [date of adoption]

If a building permit has been lawfully issued on or before (date of adoption) authorizing "other construction" as set forth in paragraph (c)(3) of Section 11-31 (General Provisions), construction pursuant to such permit may continue pursuant to the regulations governing such construction prior to the adoption of N110090 (A) ZRY – Key Terms Clarification zoning text amendment – until (one year from date of adoption).

However, this Section shall not apply to "other construction" subject to Sections 23-692 (Height limitations for narrow buildings or enlargements) or 109-40 (BOWERY, CANAL, KENMARE STREET CORRIDOR (AREA C)).

* * *

11-42
Lapse of Authorization or Special Permit Granted by the City Planning Commission Pursuant to the 1961 Zoning Resolution

(a) Except as otherwise provided in paragraphs (b), (c) or (d) of this Section, any authorization or special permit granted by the City Planning Commission ~~for a specified #use# or for a modification of #use# or #bulk# regulations granted~~ under the provisions of the 1961 Zoning Resolution shall automatically lapse if substantial construction, in accordance with the plans for which such special permit or authorization was granted, has not been completed within four years from the effective date of such permit or authorization. Substantial construction shall mean, in the case of a new #building# or #buildings#, the substantial construction of at least one #building#. For the purposes of this paragraph (a), #abutting buildings# on a single #zoning lot# shall be considered to be one #building#.

(b) ~~If the #development# is~~Any authorization or special permit for a site that is part of an urban renewal area or other government-sponsored or government-assisted project~~, the special permit or authorization~~ shall automatically lapse within four years from the date of the applicant's possession of the site, or sites, or the effective date of an authorization or special permit, whichever is later; or

(c) Upon a showing that a longer time period for substantial construction is required for a phased construction program of a multi-building complex, the Commission may, at the time of granting an authorization or special permit, extend the period set forth in paragraph (a) of this Section to a period not to exceed ten years; or

(d) In the event judicial proceedings have been instituted to review the decision to grant any authorization or special permit, the lapse period set forth in paragraph (a), (b) or (c) of this Section, whichever is applicable, shall commence upon the date of entry of the final order in such proceedings, including appeals.

* * *

Article I
Chapter 2
Construction of Language and Definitions

12-00
RULES FOR CONSTRUCTION OF LANGUAGE

12-01
Rules Applying to Text of Resolution

The following rules of construction apply to the text of this Resolution:

(a) The particular shall control the general.

(b) In case of any difference of meaning or implication between the text of this Resolution and any caption, illustration, summary table or illustrative table, the text shall control.

(c) The word "shall" is always mandatory and not discretionary. The word "may" is permissive.

(d) Words used in the present tense shall include the future; and words used in the singular number shall include the plural, and the plural the singular, unless the context clearly indicates the contrary.

(e) A "building" or "structure" includes any part thereof. <u>The terms #residential building#, #commercial building# and #community facility building# shall refer to an entire #building# used exclusively for such #use#.</u>

* * *

12-02
Rules for Interpretation of District Designations

District designations~~*~~, where applicable, are listed within a ruled bar below the number and title of each section.

When one or more district designations are listed in a section, the specific text of the paragraphs that follow applies to such district or districts.

When a section includes a table and one or more district designations are listed opposite a specific item or number in such table, the item or number applies specifically to that district or districts only.

When no district designations are listed for a specific section, the provisions of such section shall be construed to apply to all districts under consideration in the Article in which the section appears or, if specified, only to those districts referred to directly within the section itself. For this purpose, Article II applies to all residence districts, Article III applies to all commercial districts, and Article IV applies to all manufacturing districts. All other articles apply to all districts, unless otherwise provided.

~~* Each zoning district is designated by a letter indicating the general land use classification R for Residential, C for Commercial and M for Manufacturing followed by one or two numbers and, sometimes, a letter suffix. In residence districts, generally, the higher the first number, the greater the density permitted and the larger the building. Parking requirements usually decrease as density increases. A second number, following a hyphen (such as R3-1 or R3-2), denotes variations in use, bulk or parking regulations among districts within a common density category. In commercial and manufacturing districts,~~

~~the first number denotes the intensity of permitted uses; the higher the first number, generally, the broader the scope of uses that are permitted and the more significant the land use impact of such uses. The second number, following a hyphen, denotes differences in bulk or parking regulations within a common use category. The higher the second number, generally, the larger the building permitted and/or the lower the parking requirements. Letter suffixes have been added to the designations of certain districts (such as R10A) to indicate contextual counterparts that seek to maintain existing neighborhood characteristics or building scale.~~

12-10
DEFINITIONS

Words in the text or tables of this Resolution which are #italicized# shall be interpreted in accordance with the provisions set forth in this Section.

Abut, or abutting

"Abut" is to be in contact with or join at the edge or border. "Abutting buildings" are #buildings# that are in contact with one another on the same or another #zoning lot#, except as subject to separations required for seismic load as set forth in the New York City Building Code. A #building# may also #abut# a #lot line#. In addition, for #buildings# existing prior to (date of amendment), such existing #building# shall be considered #abutting# if it is within 6 inches of a #lot line# or another #building#.

Accessory use, or accessory

An "accessory use":

(a) is a #use# conducted on the same #zoning lot# as the principal #use# to which it is related (whether located within the same or an #accessory building or other structure#, or as an #accessory use# of land), except that, where specifically provided in the applicable district regulations or elsewhere in this Resolution, #accessory# docks, off-street parking or off-street loading need not be located on the same #zoning lot#; and

(b) is a #use# which is clearly incidental to, and customarily found in connection with, such principal #use#; and

(c) is either in the same ownership as such principal #use#, or is operated and maintained on the same #zoning lot# substantially for the benefit or convenience of the owners, occupants, employees, customers, or visitors of the principal #use#.

When "accessory" is used in the text, it shall have the same meaning as #accessory use#.

An #accessory use# includes:

(1) Living or sleeping accommodations for servants in connection with a #use# listed in Use Groups 1 and 2;

(2) Living or sleeping accommodations for caretakers in connection with any #use# listed in Use Groups 3 through 18 inclusive, provided that:

(i) no #building# contains more than one living or sleeping accommodation for caretakers;

(ii) no such living or sleeping accommodation shall exceed 1,200 square feet of #floor area#;

(iii) the owner shall sign a Restrictive Declaration that any such caretaker will provide maintenance and/or repair services, and containing a list of services to be

performed by such caretaker. Such Restrictive Declaration shall be recorded in the Office of the City Register, or, where applicable, the County Clerk's Office, of the county where the #building# is located. A copy of such declaration shall be provided to the Department of Buildings; ~~and~~

(iv) in C6-2M, C6-4M, M1-5M, M1-6M, M1-5A and M1-5B Districts, no living or sleeping accommodation for caretakers is permitted in any #building# which contains a #residential use# or a #joint living-work quarters for artists#; and~~.~~

(v) such living or sleeping accommodation shall not be considered a #residential use# or cause a #building# to be considered a #mixed building#.

* * *

(4) Keeping of domestic animals, but not for sale or hire. A #commercial# stable or kennel is not an #accessory use#.

* * *

Adult establishment

(1) Adult Establishment: An "adult establishment" is a #commercial# establishment which is or includes an adult book store, adult eating or drinking establishment, adult theater, or other adult #commercial# establishment, or any combination thereof, as defined below:

* * *

(c) An adult theater is a #commercial# establishment which regularly features one or more of the following:

(1) films, motion pictures, videocassettes, slides or similar photographic reproductions characterized by an emphasis on the depiction or description of "specified sexual activities" or "specified anatomical areas"; or

(2) live performances characterized by an emphasis on "specified anatomical areas" or "specified sexual activities"; and

which is not customarily open to the general public during such features because it excludes or restricts minors.

An adult theater shall include #commercial# establishments where such materials or performances are viewed from one or more individual enclosures.

(d) An other adult #commercial# establishment is a facility -- other than an adult book store, adult eating or drinking establishment, adult theater, #commercial# studio, or business or trade school -- which features employees who as part of their employment, regularly expose to patrons "specified anatomical areas" and which is not customarily open to the general public during such features because it excludes or restricts minors.

(2) Defined Terms:

* * *

(hh) A window display in which the number of products . . .

* * *

(ii) Other features relating to configuration and layout or method of operation, as set forth in rules adopted by the Commissioner of Buildings, which the

Commissioner has determined render the sale or rental of "adult printed or visual material" a substantial purpose of the business conducted in such store. Such rules shall provide for the scheduled implementation of the terms thereof to #commercial# establishments in existence as of October 31, 2001, as necessary.

(e) For the purposes of paragraph (1)(b), an "eating or drinking establishment" includes: (i) any portion of a #commercial# establishment within which food or beverages are offered for purchase, or are available to or are consumed by customers or patrons; and (ii) any portion of a commercial establishment from which a portion of a commercial establishment described in (i) above is accessible by customers or patrons.

* * *

Aggregate width of street walls ~~– see Street walls, aggregate width of~~

The "aggregate width of street walls" at any given level is the sum of the maximum widths of all #street walls# of a #building# that are within 50 feet of a #street line#. The width of a #street wall# is the length of the #street line# from which, when viewed directly from above, lines perpendicular to the #street line# may be drawn to such #street wall#.

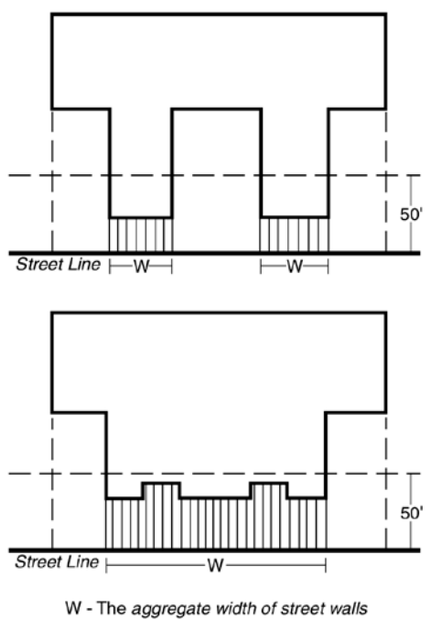

AGGREGATE WIDTH OF STREET WALLS

* * *

Arcade

An "arcade" is a continuous covered space fronting on and open to a #street# or #publicly accessible open area#, ~~and #developed#~~ provided in accordance with the provisions set forth in Section 37-80.

* * *

Attached (building)

A~~n "attached"~~ #building# ~~is a #building# that~~ shall be considered “attached” when it #abuts# two #lot lines# other than a #street line#, or another #building# or #buildings# other than a

#semi-detached building#.

~~Where a #building# shares a party wall with another #building# on an adjoining #zoning lot#, each such party wall shall be considered as a wall abutting a #lot line#.~~

Automotive service station

An "automotive service station" is a #building or other structure# or ~~a tract of land~~ an open #use# on a #zoning lot# or portion thereof used exclusively for the storage and sale of gasoline or other motor fuels and for any #uses accessory# thereto.

The sale of lubricants, accessories, or supplies, the lubrication of motor vehicles, the minor adjustment or repair of motor vehicles with hand tools only, or the occasional washing of motor vehicles are permitted #accessory uses#.

A #public parking lot# or #public parking garage# is not a permitted #accessory use#.

* * *

Base plane (6/29/94)

The "base plane" is a plane from which the height of a #building or other structure# is measured as specified in certain Sections. For #buildings#, portions of #buildings# with #street walls# at least 15 feet in width, or #building segments# within 100 feet of a #street line#, the level of the #base plane# is any level between #curb level# and #street wall line level#. Beyond 100 feet of a #street line#, the level of the #base plane# is the average elevation of the final grade adjoining the #building# or #building segment#, determined in the manner prescribed by the Building Code of the City of New York for adjoining grade elevation. In either case, where the #base flood elevation# is higher than grade, the #base flood elevation# may be the level of the #base plane#. For the purposes of this definition, #abutting buildings# on a single #zoning lot# may be considered a single #building#. In addition, the following regulations shall apply:

(a) Within 100 feet of a #street line#:

(1) The level of the #base plane# for a #building# or #building segment# without a #street wall# shall be determined by the average elevation of the final grade adjoining such #building# or #building segment#.

(2) Where a #base plane# other than #curb level# is established, the average elevation of the final grade adjoining the #street wall# of the #building# or #building segment#, excluding the entrance to a garage within the #street wall#, shall not be lower than the level of the #base plane#, unless the #base plane# is also the #base flood elevation#.

(3) Where the average elevation of the final grade adjoining the #street wall# of the #building#, excluding the entrance to a garage within the #street wall#, is more than two feet below #curb level#, the level of the #base plane# shall be the elevation of such final grade, unless the #base plane# is also the #base flood elevation#. This paragraph shall not apply to #buildings developed# before June 30, 1989 in R2X, R3, R4 or R5 Districts. Furthermore, this paragraph shall not apply to #buildings# in C1 or C2 Districts mapped within R2X, R3, R4 or R5 Districts, or in C3 or C4-1 Districts, unless such #buildings# are located on #waterfront blocks#.

(4) As an option, on sites which slope from the #street wall line level# to the #rear wall line level# by at least ten percent to the horizontal, the level of the #base plane# may extend in a sloping plane from such #street wall line level# to such #rear wall line level#. When a sloping #base plane# is thus established, the average elevation of the final grade at the #rear wall line# shall not be lower than

the #rear wall line level#.

(b) For all #buildings#, where #base planes# of different elevations apply to different portions of a #building#, only that portion of the #building# to which such #base plane# applies may be used to determine such #base plane#.

(c) For #buildings# located partially within and partially beyond 100 feet of a #street line#, or where #corner lot# or #through lot# regulations subject different portions of a #building# to #base planes# of different elevations, separate #base planes# may be determined for each such portion of the #building# or, as an option, the elevation of each such #base plane# may be multiplied by the percentage of the total #lot coverage# of the #building# to which such #base plane# applies. The sum of the products thus obtained may be the elevation of the adjusted #base plane# applicable to such #building#.

* * *

Building

A "building" is any structure which:

(a) is located within the #lot lines# of a #zoning lot#;

(~~a~~b) is permanently affixed to the land;

(~~b~~c) has one or more floors and a roof; ~~and~~

(~~c~~d) is bounded by ~~either~~ open area, ~~or the #lot lines# of a #zoning lot#~~ or #fire walls#;

(e) has at least one #primary entrance#;

(f) provides all the vertical circulation and exit systems required for such #building# by the New York City Building Code without reliance on other #buildings#, including required stairs and elevators; and

(g) contains all the fire protection systems required for such #building# by the New York City Building Code without reliance on other #buildings#, including fire suppression or fire alarm systems.

The provisions of this Resolution which use the term #building# shall apply to any structure existing prior to [date of adoption] that complies with paragraphs (a) through (e) of this definition.

A #building# shall not include such structures as billboards, fences, or radio towers, or structures with interior surfaces not normally accessible for human use, such as gas ~~holders,~~ tanks, smoke stacks, ~~grain elevators, coal bunkers, oil cracking towers,~~ or similar structures.

~~A #building# may, for example, consist of a one-family #detached residence#, a #two-family residence#, either a row house or a series of row houses (depending on location of #lot lines#), a row of garden apartments with individual entrances, or an apartment house; a single store or a row of stores (depending on location of #lot lines#); or a single factory or a loft.~~

A #building# may, for example, consist of a #detached single-family residence#, an #attached# townhouse on an individual #zoning lot#, an #attached# townhouse separated by #fire walls# from #abutting# townhouses on a shared #zoning lot#, a group of townhouses not separated by #fire walls# or #lot lines#, an apartment house, an office building or a factory.

(Building) designed for residential use - see Designed for residential use

~~Building, mixed (12/15/61)~~

~~A "mixed building" is a #building# in a #Commercial District# used partly for #residential use# and partly for #community facility# or #commercial use#.~~

Building or other structure

A "building or other structure" includes any #building# or any other structure of any kind.

~~Building, residential - see Residence~~

* * *

Bulk

"Bulk" is the term used to describe the size of #buildings or other structures#, and their relationships to each other and to open areas and #lot lines#, and therefore includes:

(a) the size (including height and #floor area#) of #buildings or other structures#;

(b) the area of the #zoning lot# upon which a # ~~residential~~ building# is located, and the number of #dwelling units# or #rooming units# within ~~such~~ a #building# in relation to the area of the #zoning lot#;

(c) the shape of #buildings or other structures#;

(d) the location of exterior walls of #buildings or other structures# in relation to #lot lines#, to other walls of the same #building#, to #legally required windows#, or to other #buildings or other structures#; and

(e) all open areas relating to #buildings or other structures# and their relationship thereto.

* * *

Commercial District

A "Commercial District" includes any district whose designation begins with the letter "C".

~~A "C1 District" includes any district whose designation begins with the symbol "C1".~~

~~A "C2 District" includes any district whose designation begins with the symbol "C2".~~

For example, ~~A~~ a "C4 District" includes any district whose designation begins with the symbol "C4".

~~A "C5 District" includes any district whose designation begins with the symbol "C5".~~

~~A "C6 District" includes any district whose designation begins with the symbol "C6".~~

~~A "C8 District" includes any district whose designation begins with the symbol "C8".~~

Commercial building (12/15/61)

A "commercial building" is a #building# used only for a #commercial use#.

Commercial District (12/15/61)

A "Commercial District" includes any district whose designation begins with the letter "C".

~~A "C1 District" includes any district whose designation begins with the symbol "C1".~~

~~A "C2 District" includes any district whose designation begins with the symbol "C2".~~

For example, a ~~A~~ "C4 District" includes any district whose designation begins with the symbol "C4".

~~A "C5 District" includes any district whose designation begins with the symbol "C5".~~

~~A "C6 District" includes any district whose designation begins with the symbol "C6".~~

~~A "C8 District" includes any district whose designation begins with the symbol "C8".~~

Commercial ~~use~~

A "commercial ~~use~~" #use# is any #use# listed in Use Groups 5, 6, 7, 8, 9, 10, 11, 12, 13, 14, 15 or 16.

* * *

Community facility ~~use~~

A "community facility ~~use~~" is any #use# listed in Use Group 3 or 4.

* * *

Conversion, or to convert

A “conversion” is a change of #use# between the following categories of #uses#: #residential#, #community facility#, #commercial# and #manufacturing#. Therefore, the change of #use# within one category is not a #conversion#. However, a #conversion# shall also include any alteration within the #residential# portion of an existing #building# that increases the number of #rooming units# in a #building#, or the number of #dwelling units# in a #building#.

To "convert" is to create a #conversion#.

* * *

Development, or to develop

A "development", on a #zoning lot# or a portion thereof, includes:

(a) the construction of a new #building or other structure# ~~on a #zoning lot#,~~ ;
(b) the relocation of an existing #building or other structure# ~~on~~ to another #zoning lot#~~,~~ ; or
(c) ~~the #use# of a tract of land for~~ the establishment of a new open #use#, other than an #accessory use#.

The alteration of a #building# or a portion thereof to the extent specified in Section 11-23 (Demolition and Replacement) shall be considered a #development# for the purposes of the provisions set forth therein.

To "develop" is to create a #development#.

Dwelling unit

A "dwelling unit" ~~consists of one or more #rooms#~~ contains at least one #room# in a #residential building#, #residential# portion of a #building#, or #non-profit hospital staff dwelling#, ~~which~~

and ~~are~~ is arranged, designed, used or intended for use by one or more persons living together and maintaining a common household, and which #dwelling unit# includes lawful cooking space and lawful sanitary facilities reserved for the occupants thereof.

~~In counting the number of #rooms# in a #dwelling unit# for the purpose of determining the #lot area# requirements, no #rooming unit# shall be counted as part of the #dwelling unit#.~~

Enclosed sidewalk cafe - see Sidewalk cafe, enclosed

Enlargement, or to enlarge

An "enlargement" is an addition to the #floor area# of an existing #building#, an increase in the size of any other structure, or an expansion of an existing #use#, including any #uses accessory# thereto, to an open portion of a #zoning lot# not previously used for such #use# ~~increase in that portion of a tract of land occupied by an existing #use#~~.

To "enlarge" is to make an #enlargement#.

* * *

Family

A "family" is either:

(a) a single person occupying a dwelling and maintaining a household, including not more than one "boarder, roomer, or lodger" as defined in ~~Section D26-1.7 of~~ the Housing Maintenance Code; or

(b) two or more persons related by blood or marriage, occupying a dwelling, living together and maintaining a common household, including not more than one such boarder, roomer, or lodger; or

(c) not more than four unrelated persons occupying a dwelling, living together and maintaining a common household.

A common household shall be deemed to exist if all members thereof have access to all parts of the dwelling.

Fire wall

A “fire wall” is a fire-resistance-rated smoke-tight wall having protected openings which restricts the spread of fire and extends vertically without offset, continuously from the foundation to or through the roof, and is in accordance with the specifications of the New York City Building Code for fire walls or fire wall separations, as applicable.

Where a wall constructed prior to [date of adoption] does not meet the requirements of the preceding paragraph, but does meet the fire wall specifications of the New York City Building Code pursuant to which it was constructed, such wall shall be considered a #fire wall.# In the event that such wall either fails to meet such specifications, or no specifications for fire walls existed at the time of its construction, the Commissioner of the Department of Buildings shall determine whether such wall shall be considered a #fire wall# for the purpose of determining the boundary of a #building#.

Flashing sign - see Sign, flashing

Floor area (4/16/08)

"Floor area" is the sum of the gross areas of the several floors of a #building# or #buildings#, measured from the exterior faces of exterior walls or from the center lines of walls separating two #buildings#. In particular, #floor area# includes:

(a) #basement# space, except as specifically excluded in this definition;

(b) elevator shafts or stairwells at each floor;

(c) floor space in penthouses;

(d) attic space (whether or not a floor has been laid) providing structural headroom of five feet or more in R2A, R2X, R3, R4 or R5 Districts, ~~and~~ eight feet or more in ~~other districts~~ R1 and R2 districts, other than R2A and R2X Districts, and eight feet or more for #single-# or #two-family residences# in R6, R7, R8, R9, and R10 Districts. For #buildings# with three or more #dwelling units# in R6, R7, R8, R9, and R10 Districts #developed# or #enlarged# prior to (date of amendment), such attic space providing structural headroom of eight feet or more shall be considered #floor area#. For #buildings# with three or more #dwelling units# in R6, R7, R8, R9, and R10 Districts #developed# or #enlarged# after (date of amendment), any attic space shall be considered #floor area#;

(e) floor space in gallerias, interior balconies, mezzanines or bridges;

(f) floor space in open or roofed terraces, bridges, breeze ways or porches, if more than 50 percent of the perimeter of such terrace, breeze way, or porch is enclosed, and provided that a parapet not higher than 3 feet, 8 inches, or a railing not less than 50 percent open and not higher than 4 feet, 6 inches, shall not constitute an enclosure;

(g) any other floor space used for dwelling purposes, no matter where located within a #building#, when not specifically excluded;

(h) floor space in #accessory buildings#, except for floor space used for #accessory# off-street parking;

(i) floor space used for #accessory# off-street parking spaces provided in any #story# after June 30, 1989:

(1) within #detached# or #semi-detached single-# or #two-family residences# in R1-2A, R2A, R2X, R3, R4 or R5 Districts, except that:

(i) in R2A Districts, #floor area# within such #residences# shall include only floor space in excess of 300 square feet for one such space; and

(ii) in R3, R4A and R4-1 Districts in #lower density growth management areas# and in all R1-2A Districts, #floor area# within such #residences# shall include only floor space in excess of 300 square feet for one such space and in excess of 500 square feet for two such spaces;

(2) within #~~residential~~ buildings# containing #residences developed# or #enlarged# pursuant to the optional regulations applicable in a #predominantly built-up area#;

(3) in excess of 100 square feet per required space in individual garages within other #~~residential~~ buildings# containing #residences# (#attached ~~residential~~ buildings#, rowhouses or multiple dwellings) in R3-2, R4 or R5 Districts, except that in R3-2 Districts within #lower density growth management areas#, #floor area# shall only include floor space in excess of 300 square feet for one such space and in excess of 500 square feet for two such spaces. However, all of the floor space within any #story# in individual garages shall be considered #floor area# where, subsequent to June 7, 1989, the level of any #yard# except that portion of a #yard#

in front of a garage on the #zoning lot# is lowered below the lower of:

(i) #curb level#; or

(ii) grade existing on June 7, 1989;

(4) within a #group parking facility# with five or more required spaces #accessory# to ~~#residential~~ buildings# containing #residences# in R3, R4 or R5 Districts that is located in a space with a ceiling height that is more than six feet above the #base plane#, or, if the #base plane# is a sloping #base plane#, six feet above the #street wall line level# used to establish such #base plane#. On #through lots# with sloping #base planes#, the #street wall line level# closest to a #street# shall be used to determine whether such space is #floor area#;

(5) which is located more than 23 feet above #curb level# in any other #building#;

(6) which is unenclosed and covered by a ~~#residential~~ building or other structure# containing #residential use# for at least 50 percent of such #accessory# off-street parking space in R2A, R2X, R3, R4 and R5 Districts. Where such #accessory# off-street parking space is covered by any portion of a ~~#residential~~ building or other structure# containing #residential use#, other than a #single-# or #two-family detached# or #semi-detached residence# in R3-2, R4 or R5 Districts, and not #developed# or #enlarged# pursuant to the optional regulations applicable in a #predominantly built-up area#, such #floor area# shall include only that portion of the #accessory# off-street parking space in excess of 100 square feet per required space;

(j) floor space used for #accessory# off-street loading berths in excess of 200 percent of the amount required by the applicable district regulations;

(k) floor space ~~within an existing #building# which~~ that is or becomes unused or inaccessible within a #building#;

(l) floor space ~~which~~ that has been eliminated from the volume of an existing #building# in conjunction with the #development# of a new #building# or in the case of a major #enlargement#, as set forth in Section 11-31 (General Provisions), of another #building# on the same #zoning lot#;

(m) floor space used for mechanical equipment that exceeds 50 square feet for the first #dwelling unit#, an additional 30 square feet for the second #dwelling unit#, and an additional 10 square feet for each additional #dwelling unit# in R2X, R3, R4 or R5 Districts. For the purposes of calculating floor space used for mechanical equipment, #building segments# on a single #zoning lot# may be considered to be separate #buildings#; and

(n) floor space in exterior balconies if more than 67 percent of the perimeter of such balcony is enclosed and provided that a parapet not higher than 3 feet, 8 inches, or a railing not less than 50 percent open and not higher than 4 feet, 6 inches, shall not constitute an enclosure;

(o) any other floor space not specifically excluded.

However, the #floor area# of a #building# shall not include:

(1) #cellar# space, except where such space is used for dwelling purposes. #Cellar# space used for retailing shall be included for the purpose of calculating requirements for #accessory# off-street parking spaces, #accessory# bicycle parking and #accessory# off-street loading berths;

(2) elevator or stair bulkheads, #accessory# water tanks, or cooling towers, except that such

exclusions shall not apply in R2A Districts;

(3) uncovered steps;

(4) attic space (whether or not a floor has been laid) providing structural headroom of less than five feet in R2A, R2X, R3, R4 or R5 Districts, ~~and~~ less than eight feet in ~~other districts~~ R1 and R2 districts, other than R2A and R2X Districts, and less than eight feet for #single-# or #two-family residences# in R6, R7, R8, R9, and R10 Districts. For #buildings# with three or more #dwelling units# in R6, R7, R8, R9, and R10 Districts #developed# or #enlarged# prior to (date of amendment), such attic space providing structural headroom of less than eight feet shall not be considered #floor area#;

(5) floor space in open or roofed terraces, bridges, breeze ways or porches, provided that not more than 50 percent of the perimeter of such terrace, breeze way, or porch is enclosed, and provided that a parapet not higher than 3 feet, 8 inches, or a railing not less than 50 percent open and not higher than 4 feet, 6 inches, shall not constitute an enclosure;

(6) floor space used for #accessory# off-street parking spaces provided in any #story#:

(i) up to 200 square feet per required space existing on June 30, 1989, within ~~#residential~~ buildings# containing #residences# in R3, R4 or R5 Districts, and up to 300 square feet for one required space in R2A Districts. However, for #detached# or #semi-detached single-# or #two-family residences# in R3, R4A and R4-1 Districts within #lower density growth management areas# and in all R1-2A Districts, #floor area# shall not include up to 300 square feet for one space and up to 500 square feet for two spaces;

(ii) up to 100 square feet per required space in individual garages in #attached ~~residential~~ buildings# containing #residences#, rowhouses or multiple dwellings in R3, R4, or R5 Districts, except that in R3-2 Districts within #lower density growth management areas#, up to 300 square feet for one such space and up to 500 square feet for two such spaces, except for:

(1) ~~#residential~~ buildings containing #residences# developed# or #enlarged# after June 30, 1989, pursuant to the optional regulations applicable in a #predominantly built-up area#; or

(2) ~~#residential~~ buildings# containing #residences# where, subsequent to June 7, 1989, the level of any #yard#, except that portion of a #yard# in front of a garage on the #zoning lot# is lowered below the lower of #curb level# or grade existing on June 7, 1989;

(iii) within an #attached ~~residential~~ building# containing #residences#, #building segment# or multiple dwelling in R3-2, R4, or R5 Districts if such floor space is within a #group parking facility# with five or more required spaces that is located in a space with a ceiling height not more than six feet above the #base plane#, or, if the #base plane# is a sloping #base plane#, not more than six feet above the #street wall line level# used to establish such #base plane#. On #through lots# with sloping #base planes#, the #street wall line level# closest to a #street# shall be used to determine whether such space is #floor area#;

(iv) located not more than 23 feet above #curb level#, in any other #building#, except where such floor space used for #accessory# parking is contained within a #public parking garage#;

(v) in R3-2, R4, and R5 Districts, up to 100 square feet per required space which is unenclosed and covered by a ~~#residential~~ building# containing #residences# other than a #single-# or #two-family detached# or #semi-detached residence# for at least 50 percent of such #accessory# off-street parking space, except where such #residences# are or have been #developed# or #enlarged# pursuant to the optional

regulations applicable in a #predominantly built-up area#;

* * *

(11) floor space within stairwells at each floor of #~~residential~~ buildings# containing #residences developed# or #enlarged# after April 16, 2008, that are greater than 125 feet in height, provided:

(i) such stairwells are located on a #story# containing #residences#;

(ii) such stairwells are used as a required means of egress from such ~~#residential buildings~~ residences#;

(iii) such stairwells have a minimum width of 44 inches;

(iv) such floor space excluded from #floor area# shall be limited to a maximum of eight inches of stair and landing width measured along the length of the stairwell enclosure at each floor; and

(v) where such stairwells serve non-#residential uses# on any floor, or are located within multi-level #dwelling units#, the entire floor space within such stairwells on such floors shall count as #floor area#.

Floor area ratio

"Floor area ratio" is the total #floor area# on a #zoning lot#, divided by the #lot area# of that #zoning lot#. If two or more #buildings# are located on the same #zoning lot#, the #floor area ratio# is the sum of their #floor areas# divided by the #lot area#. (For example, a #zoning lot# of 10,000 square feet with a #building# containing 20,000 square feet of #floor area# ~~on a #zoning lot# of 10,000 square feet~~ has a #floor area ratio# of 2.0 and a #zoning lot# of 20,000 square feet with two #buildings# containing a total of 40,000 square feet of #floor area# also has a #floor area ratio# of 2.0 .)

* * *

~~General large-scale development - see Large-scale development, general~~

Group parking facility

A "group parking facility" is a #building or other structure# or ~~a tract of land~~ an open #use# on a #zoning lot# or portion thereof used for the storage of motor vehicles, that contains more than one parking space, has access to the #street# common to all spaces and, if #accessory# to a #residential use#, is designed to serve more than one #dwelling unit#.

A #group parking facility# shall include, but is not limited to, the following:

(a) an open parking area;

(b) parking spaces included within, or on the roof of, a #building# not primarily used for parking;

(c) a #building# or #buildings# used primarily for parking, including a group of individual garages.

A #group parking facility# shall not include ~~I~~ in R3, R4 or R5 Districts, individual parking garages within ~~#residential~~ buildings# ~~,~~ containing #residences# or individual unenclosed #accessory# parking spaces adjacent to ~~#residential buildings#,~~ #residences# which have access from a #street#, a private street or a driveway common to all the spaces~~, do not constitute a~~

~~#group parking facility#~~.

Height factor

The "height factor" of a ~~#building#~~ #zoning lot# is equal to the total #floor area# of ~~the~~ a #building# divided by its #lot coverage#. If two or more #buildings# are located on the same #zoning lot#, the~~ir~~ #height factor# is the sum of their #floor areas# divided by the sum of their #lot coverages#. The #height factor# is thus equal to the number of #stories#, if the #building# were erected without setbacks. In computing a #height factor#, a fraction of .5 or more may be considered a whole number, and smaller fractions shall be disregarded.

For example, a #zoning lot# with a #residential building# containing 60,000 square feet of #floor area# and a #lot coverage# of 5,000 square feet has a #height factor# of 12, and a #zoning lot# with two #residential buildings# containing a total of 80,000 square feet of #floor area# and 10,000 square feet of total #lot coverage# has a #height factor# of 8.

Home occupation

(a) A "home occupation" is an #accessory use# which:

(1) is clearly incidental to or secondary to the #residential use# of a #dwelling unit# or #rooming unit#;

(2) is carried on within a #dwelling unit#, #rooming unit#, or #accessory building# by one or more occupants of such #dwelling unit# or #rooming unit#, except that, in connection with the practice of a profession, one person not residing in such #dwelling unit# or #rooming unit# may be employed; and

(3) occupies not more than 25 percent of the total #floor area# of such #dwelling unit# or #rooming unit# and in no event more than 500 square feet of #floor area#.

(b) In connection with the operation of a #home occupation#, it shall not be permitted:

(1) to sell articles produced elsewhere than on the premises;

(2) to have exterior displays, or a display of goods visible from the outside;

(3) to store materials or products outside of a principal or #accessory building or other structure#;

(4) to display, in an R1 or R2 District, a nameplate or other #sign# except as permitted in connection with the practice of a profession;

(5) to make external structural alterations which are not customary ~~in #residential buildings~~ for #residences#; or

(6) to produce offensive noise, vibration, smoke, dust or other particulate matter, odorous matter, heat, humidity, glare, or other objectionable effects.

(c) #Home occupations# include, but are not limited to:

fine arts studios

professional offices

teaching of not more than four pupils simultaneously, or, in the case of musical instruction, of not more than a single pupil at a time.

(d) However, #home occupations# shall not include:

advertising or public relations agencies

barber shops

beauty parlors

#commercial# stables or kennels

depilatory, electrolysis, or similar offices

interior decorators' offices or workshops

ophthalmic dispensing

pharmacy

real estate or insurance offices

stockbrokers' offices

veterinary medicine.

Hotel, apartment

An "apartment hotel" is a #building# or part of a #building# that is a Class A multiple dwelling as defined in the Multiple Dwelling Law, ~~in~~ which:

(a) ~~the~~ has three or more #dwelling units# or #rooming units# ~~are used primarily for permanent occupancy~~;

(b) has one or more common entrances ~~serve~~ serving all such units; and

(c) provides one or more of the following services ~~are provided~~: housekeeping, telephone, desk, or bellhop service, or the furnishing or laundering of linens.

Restaurants, cocktail lounges, or indoor swimming pools are permitted #accessory uses#, provided that in #Residence Districts#, such facilities shall be accessible only through the lobby and there shall be no #signs# except as permitted by the applicable district regulations. Public banquet halls, ballrooms, or meeting rooms are not permitted #accessory uses#.

* * *

~~Industrial Loft Advisory Council~~

~~The "Industrial Loft Advisory Council" shall be the council in the Mayor's Office for Economic Development created by Executive Order of the Mayor and composed of representatives of local industry, which may advise the Mayor, the City Planning Commission and its Chairperson, or the Board of Standards and Appeals concerning applications pursuant to the Zoning Resolution. The ILAC shall be an interested party for the purpose of Section 668(c) of the New York City Charter.~~

* * *

Joint living-work quarters for artists

A "joint living-work quarters for artists" consists of one or more #rooms# in a #non-#residential building#, on one or more floors, with lawful cooking space and sanitary facilities meeting the

requirements of the Housing Maintenance Code, occupied:

(a) and arranged and designed for use by, and is used by, not more than four non-related #artists#, or an #artist# and ~~his~~ the #artist's# household, and including adequate working space reserved for the #artist#, or #artists# residing therein;

(b) by any household residing therein on September 15, 1986, whose members are all unable to meet the #artist# certification qualifications of the Department of Cultural Affairs that registers with the Department of Cultural Affairs prior to nine months from January 8, 1987; or

(c) by any person who is entitled to occupancy by any other provision of law.

~~An #artist# is a person so certified by the New York City Department of Cultural Affairs.~~

Regulations governing #joint living-work quarters for artists# are set forth in Article I, Chapter 5, Sections 42-14, paragraph (D) (Use Group 17 - Special Uses), 42-141 (Modification by certification of the City Planning Commission of uses in M1-5A and M1-5B Districts), 43-17 (Special Provisions for Joint Living-Work Quarters for Artists) and 74-78 (Conversions of Non-Residential Buildings).

Land with minor improvements

"Land with minor improvements" is a tract of land or a #zoning lot# that:

(a) does not ~~involve~~ contain any #building or other structure#; or

(b) involves #buildings or other structures#, or other improvements, located underground or substantially at ground level, with a total assessed valuation, excluding land, of less than ~~$2,000~~ 14,500 as of (date of adoption), as determined from the assessment rolls in effect on the applicable date on which such #use# is changed, damaged or destroyed, or terminated, in accordance with the provisions of Sections 52-32, 52-52 or 52-72 (Land with Minor Improvements). The Chairperson of the City Planning Commission shall adjust this figure annually. Such adjustment shall occur on August 1 of each calendar year, based on the percentage change in the Consumer Price Index for all urban consumers as defined by the U.S. Bureau of Labor Statistics for the twelve months ended on June 30 of that year.

Large-scale community facility development

A "large-scale community facility development" ~~is a # development # or #enlargement# used predominantly for #community facility uses#, on a tract of land containing a~~ contains one or more #buildings# on a single #zoning lot# or two or more #zoning lots# that are contiguous or would be contiguous but for their separation by a #street# or a #street# intersection~~,~~ used predominantly for #community facility uses#, ~~which~~ ~~tract of land~~ and:

(a) has or will have an area of at least three acres; ~~and~~

(b) ~~is designated as a tract,~~ ~~all of which~~ has been or is to be used, #developed# or #enlarged# as a unit:

(1) under single fee ownership or alternate ownership arrangements as set forth in the #zoning lot# definition in Section 12-10 (DEFINITIONS) for all #zoning lots# comprising the #large-scale community facility development#; or

(2) under single fee, alternate or separate ownership, either:

(i) pursuant to an urban renewal plan for ~~the #development# of~~ a designated

urban renewal area containing such ~~tract of land~~ #zoning lots#; or

(ii) through assemblage by any other governmental agency, or its agent, having the power of condemnation~~.~~; and

(c) shall be located entirely in a #Residence District# or in a C1, C2, C3 or C4-1 District.

Such ~~tract of land~~ #zoning lots# may include any land occupied by #buildings# existing at the time an application is submitted to the City Planning Commission under the provisions of Article VII, Chapter 9, provided that such #buildings# form an integral part of the #large-scale community facility development#.

~~A #large-scale community facility development# shall be located entirely in a #Residence District# or in a C1, C2, C3 or C4-1 District and shall in no event be considered as a #general large-scale development#.~~

Large-scale development

A "large-scale development" is either a #large-scale community facility development#, a #large-scale general development#, or a #large-scale residential development#.

Large-scale general development~~, general~~

A "~~general~~ large-scale general development" ~~is~~ contains one or more #buildings# on a single #zoning lot# or two or more #zoning lots# that are contiguous or would be contiguous but for their separation by a #street# or a #street# intersection and is not either ~~a large-scale #development# or #enlargement# other than~~ a #large-scale residential development# or a #large-scale community facility development#~~.~~, and:

~~A #general large-scale development# may be located in any #Commercial# or #Manufacturing District#, subject to the restrictions of Section 74-743 (Special provisions for bulk modifications), paragraph (a)(1), on a tract of land containing a single #zoning lot# or two or more #zoning lots# that are contiguous or would be contiguous but for their separation by a #street# or a #street# intersection, which tract of land~~

(a) has or will have an area of at least 1.5 acres; ~~and~~

(b) ~~is designated as a tract, all of which~~ has been or is to be used, #developed# or #enlarged# as a unit:

(1) under single fee ownership or alternate ownership arrangements as set forth in the #zoning lot# definition in Section 12-10 (DEFINITIONS) for all #zoning lots# comprising the # large-scale general development#; or

(2) under single fee, alternate or separate ownership, either:

(i) pursuant to an urban renewal plan ~~for the #development# of~~ for a designated urban renewal area containing such ~~tract of land~~ #zoning lots#; or

(ii) through assemblage by any other governmental agency, or its agent, having the power of condemnation~~.~~ ; and

(c) shall be located in whole or in part in any #Commercial# or #Manufacturing District#, subject to the restrictions of Section 74-743 (Special provisions for bulk modifications), paragraph (a)(1).

Such ~~tract of land~~ #zoning lots# may include any land occupied by #buildings# existing at the

time an application is submitted to the City Planning Commission under the provisions of Article VII, Chapter 4, provided that such #buildings# form an integral part of the #~~general~~ large-scale general development#, and provided that there is no #bulk# distribution from a #zoning lot# containing such existing #buildings#. In C5 and C6 Districts, however, a #~~general~~ large-scale general development# having a minimum #lot area# of five acres may include a #zoning lot# that contains an existing #building# that is not integrally related to the other parts of the #~~general~~ large-scale general development#, provided that such #building# covers less than 15 percent of the #lot area# of the #~~general~~ large-scale general development# and provided that there is no #bulk# distribution from a #zoning lot# containing such existing #building#.

Large-scale residential development

A "large-scale residential development" ~~is~~ contains one or more #buildings# ~~a #development# used predominantly for #residential uses#, on a tract of land containing~~ on a single #zoning lot# or two or more #zoning lots# that are contiguous or would be contiguous but for their separation by a #street# or a #street# intersection, used predominantly for #residential uses# ~~which tract of land~~ and:

(a) has or will have an area of at least 1.5 acres and a total of at least three principal #buildings#, or an area of at least three acres and a total of at least 500 #dwelling units#; ~~and~~

(b) has been or is to be #developed# as a unit:

(1) under single fee ownership or alternate ownership arrangements as set forth in the #zoning lot# definition in Section 12-10 (DEFINITIONS) for all #zoning lots# comprising the # large-scale residential development#; or

(2) under single fee, alternate or separate ownership, either:

(i) pursuant to an urban renewal plan ~~for the #development# of~~ for a designated urban renewal area containing such ~~tract of land~~ #zoning lots#; or

(ii) through assemblage by any other governmental agency, or its agent, having the power of condemnation~~.~~ ;

(c) ~~A #large-scale residential development#~~ shall be located entirely in a #Residence District# or in a C1, C2, C3 or C4-1 District~~, and shall in no event be considered as a #general large-scale development#.~~ ; and

(d) shall not include any #zoning lots# occupied by existing #buildings# to remain; and in staged developments, existing #buildings# proposed for demolition shall not be permitted to create a temporary #non-compliance#.

Legally required window

A "legally required window" is a window or portion of a window (including a window either in addition to or as a substitute for mechanical ventilation) which is required by any applicable law or statute to provide light or ventilation to a "living room," as defined in ~~Section 4 of the Multiple Dwelling Law~~ the Housing Maintenance Code.

* * *

Lot coverage

"Lot coverage" is that portion of a #zoning lot# which, when viewed directly from above, would be covered by a #building# or any part of a #building#. However, for purposes of computing a

#height factor#, any portion of such #building# covered by a roof which qualifies as #open space#, or any terrace, balcony, breeze way, or porch or portion thereof not included in the #floor area# of a #building#, shall not be included in #lot coverage#.

When a #height factor# is not computed for a #residential building# or #residential# portion of a #building#, the portion of any balcony which does not project from the face of the #building# shall be counted as #lot coverage#, but other obstructions permitted pursuant to Section 23-44 (Permitted Obstructions in Required Yards or Rear Yard Equivalents) shall not be included in #lot coverage#.

For example, a #zoning lot# of 20,000 square feet consists of one portion, 100 feet by 100 feet, as a #corner lot# portion, and another portion, 100 feet by 100 feet, as an #interior lot# portion. In a district that allows 70 percent coverage of the #interior lot# portion, that portion can have a #lot coverage# of 7,000 square feet, while the #corner lot# portion which is allowed 80 percent coverage can have a #lot coverage# of 8,000 square feet.

* * *

Lower density growth management area

A “lower density growth management area" is any R1, R2, R3, R4A, R4-1 or C3A District in the following designated areas, and any #~~development~~ zoning lot# containing #buildings# accessed by #private roads# in R1, R2, R3, R4, R5 or C3A Districts within such areas:

The Borough of Staten Island
Community District 10 in the Borough of the Bronx

In the borough of Staten Island, #lower density growth management areas# shall also include any C1, C2, or C4 District.

In the Borough of the Bronx, in Community District 10, #lower density growth management areas# shall also include any R6, R7, C1 or C2 Districts for the purposes of applying the parking provisions of Article II, Chapter 5, and Article III, Chapter 6.

* * *

Manufacturing ~~use~~

A "manufacturing ~~use~~" #use# is any #use# listed in Use Group 17 or 18.

* * *

Manufacturing District

A "Manufacturing District" includes any district whose designation begins with the letter "M".

For example, ~~A~~ an "M1" District includes any district whose designation begins with the symbol "M1".

~~An "M2" District includes any district whose designation begins with the symbol "M2".~~

~~An "M3" District includes any district whose designation begins with the symbol "M3".~~

* * *

Mixed building ~~– see Building, mixed~~

A "mixed building" is a #building# in a #Commercial District# used partly for #residential use# and partly for #community facility# or #commercial use#.

* * *

Non-conforming, or non-conformity

A "non-conforming" #use# is any lawful #use#, whether of a #building or other structure# or of a ~~tract of land~~ #zoning lot#, which does not conform to any one or more of the applicable #use# regulations of the district in which it is located, either on December 15, 1961 or as a result of any subsequent amendment thereto.

A #non-conforming use# shall result from failure to conform to the applicable district regulations on either permitted Use Groups or performance standards.

A #non-conformity# is a failure by a #non-conforming use# to conform to any one of such applicable #use# regulations.

However, no existing #use# shall be deemed #non-conforming#, nor shall a #non-conformity# be deemed to exist, solely because of any of the following:

(a) the existence of less than the required #accessory# off-street parking spaces or loading berths;

(b) the existence of #non-conforming accessory signs#; or

(c) the existence of conditions in violation of the provisions of either Sections 32-41 and 32-42, relating to Supplementary Use Regulations, or Sections 32-51 and 32-52 relating to Special Provisions Applying along District Boundaries, or Sections 42-41, 42-42, 42-44 and 42-45, relating to Supplementary Use Regulations and Special Provisions Applying along District Boundaries.

* * *

Non-profit residence for the elderly

A "non-profit residence for the elderly" is a #residence# occupied at least 90 percent by elderly families, the head or spouse of which is sixty-two years of age or over, or by single elderly persons who are sixty-two years of age or over, and which:

(a) contains housekeeping, semi-housekeeping or non-housekeeping units especially designed for elderly persons or families; and

(b) consists of one or more #buildings# on the same or contiguous #zoning lots#, or on lots which would be contiguous but for their separation by a #street# and contains related #accessory# social and welfare facilities primarily for residents which may also be made available to the community, such as cafeterias, or dining halls, community rooms, workshops and other essential service facilities provided that these facilities shall occupy #floor area# or #cellar# space in an amount not less than four percent of the total #floor area# of the ~~#building# or #buildings#~~ #non-profit residence for the elderly#. In no event shall the floor space occupied by lobbies, passageways, storage space or other spaces normally provided in usual #residential buildings# be considered as a part of the #floor area# attributable to the Social and Welfare facilities; and

* * *

Non-residential building

A “non-residential building” is a #building# containing no #residences#.

Open space

~~"Open space" is that part of a #zoning lot#, including #courts# or #yards#, which:~~

~~(a) is open and unobstructed from its lowest level to the sky, except as provided below;~~

~~(b) is accessible to and usable by all persons occupying a #dwelling unit# or a #rooming unit# on the #zoning lot#; and~~

~~(c) is not part of the roof of that portion of a #building# containing #dwelling units# or #rooming units#.~~

~~#Open space# may include roofed areas, the total area of which is less than 10 percent of the unroofed or uncovered area of a #zoning lot#, provided that such roofed area is not enclosed on more than one side, or on more than 10 percent of the perimeter of the roofed area, whichever is greater.~~

~~The roof of any portion of a #building# used for #accessory# parking or for any permitted non-#residential use#, which is a portion of or attached to a #residential building#, or the roof of a #community facility building#, may be considered as #open space# if such roof area meets the requirements set forth in this definition, and:~~

~~(1) is not higher than 23 feet above #curb level#, provided that this restriction does not apply to the roof of a portion of a #mixed building# used for other than #residences#;~~

~~(2) is at least two and one-half feet below the sill level of all #legally required windows# opening on such roof area;~~

~~(3) is directly accessible by a passageway from a #building#, or by a ramp (with a grade of less than 10 percent) from a #building#, #yard#, #court# or #street#, except that in R8 or R9 Districts such roof area need not be accessible to occupants and is therefore exempt from this requirement; and~~

~~(4) has no dimension less than 25 feet; except that in R8 or R9 Districts when such roof area adjoins a #street line# or a #rear yard#, it may have a minimum depth of nine feet and a minimum length, along such #street line# or #rear yard#, equal to at least twice its depth, or the full width of the #zoning lot#, or 50 feet, whichever is the least distance.~~

"Open space" is that part of a #zoning lot#, including #courts# or #yards#, which is open and unobstructed from its lowest level to the sky and is accessible to and usable by all persons occupying a #dwelling unit# or a #rooming unit# on the #zoning lot#.

#Open space# may, however, include areas covered by roofs, the total area of which is less than 10 percent of the unroofed or uncovered area of a #zoning lot#, provided that such roofed area is not enclosed on more than one side, or on more than 10 percent of the perimeter of the roofed area, whichever is greater.

#Open space# may be provided on the roof of:

(a) A #community facility building#;

(b) A #building# containing #residences#, provided such roof area is not above that portion of such #building# that contains #dwelling units# or #rooming units#;

(c) A #non-residential building#, other than a #community facility building#, provided such #non-residential building abuts# other #buildings#, any one of which contains #residences#.

All such roof areas used for #open space# shall meet the requirements set forth in this definition and shall:

(1) be not higher than 23 feet above #curb level#, except as provided in Section 24-164 (Location of open space for residential portion), and Section 35-34 (Location of Open Space);

(2) be at least two and one-half feet below the sill level of all #legally required windows#

opening on such roof area;

(3) be directly accessible by a passageway from a #building#, or by a ramp (with a grade of less than 10 percent) from a #building#, #yard#, #court# or #street#, except that in R8 or R9 Districts such roof area need not be accessible to occupants and is therefore exempt from this requirement; and

(4) have no dimension less than 25 feet; except that in R8 or R9 Districts when such roof area adjoins a #street line# or a #rear yard#, it may have a minimum depth of nine feet and a minimum length, along such #street line# or #rear yard#, equal to at least twice its depth, or the full width of the #zoning lot#, or 50 feet, whichever is the least distance.

Open space ratio

The "open space ratio" of a #zoning lot# is the number of square feet of #open space# on the #zoning lot#, expressed as a percentage of the #floor area# on that #zoning lot#. (For example, if for a particular # ~~building~~ zoning lot# an #open space ratio# of 20 is required, 20,000 square feet of #floor area# in the #building# would necessitate 4,000 square feet of #open space# on the #zoning lot# ~~upon which the #building# stands~~; or, if 6,000 square feet of #lot area# were in #open space#, 30,000 square feet of #floor area# could be ~~in the #building#~~ on that #zoning lot#.) Each square foot of #open space# per 100 square feet of #floor area# is referred to as one point.

* * *

Physical culture or health establishments

A "physical culture or health establishment" is any establishment or facility, including #commercial# and non-#commercial# clubs, which is equipped and arranged to provide instruction, services, or activities which improve or affect a person's physical condition by physical exercise or by massage. Physical exercise programs include aerobics, martial arts or the use of exercise equipment.

* * *

Plaza, public

A “public plaza” is an open area for public use ~~on a #zoning lot developed#~~ provided in accordance with the requirements set forth in Section 37-70, inclusive.

* * *

Predominantly built-up area

A "predominantly built-up area" is a #block# entirely within R4 or R5 Districts including a #Commercial District# mapped within such #Residential Districts# having a maximum area of 4 acres ~~which is #developed#~~ with #buildings# on #zoning lots# comprising 50 percent or more of the area of the #block#. However, a #predominantly built-up area# shall not include a #block# which is located partly in a R4A, R4-1, R4B, R5B or R5D District.

* * *

Primary entrance

"Primary entrances" are the principal entrances to a #building# utilized for day-to-day pedestrian ingress and egress. Other entrances solely used for freight, service or emergency egress shall not constitute a #primary entrance#.

Private road

In accordance with Sections 26-00 (Applicability of this Chapter) and 37-10 (Applicability of Article II, Chapter 6 to Developments with Private Roads), ~~Except in #lower density growth management areas#~~, a "private road" is a right-of-way, other than a #street#, that provides vehicular access from a #street# to ~~any #dwelling unit# within a #development# where~~ five or more #dwelling units# that are within #buildings# or #building segments# that are located wholly beyond 50 feet of a #street line# or #street setback line#.

An individual driveway serving fewer than five parking spaces shall not be considered a #private road#.

However, ~~In~~ in #lower density growth management areas#, a private road is a right-of-way, other than a #street#, that provides vehicular access from a #street# to:

(a) three or more #buildings# or #building segments# located wholly beyond 50 feet of a #street line# or #street setback line#; or

(b) one or two #buildings# or #building segments# located wholly beyond 50 feet of a #street line# or #street setback line# that contain five or more #dwelling units#.

* * *

Public parking lot

A "public parking lot" is any open ~~tract of land~~ area on a #zoning lot# that is:

(a) used for the parking or storage of motor vehicles, but not for commercial or public utility vehicles or the dead storage of motor vehicles; and

(b) not #accessory# to a #use# on the same or another #zoning lot#.

#Car sharing vehicles# may occupy spaces in a #public parking lot#; however, the number of spaces so occupied shall not exceed 40 percent of all parking spaces in such parking lot. Minor repairs incidental to the parking or storage of motor vehicles are a permitted #accessory use#.

* * *

Quality Housing building

A “Quality Housing building” is a #building#, #developed#, #enlarged#, #extended# or #converted#, pursuant to the Quality Housing Program.

Quality Housing building segment

A “Quality Housing building segment” is a #building segment#, #developed#, #enlarged#, #extended# or #converted# pursuant to the Quality Housing Program.

* * *

Residence, or residential

A "residence" is one or more ~~a #building# or part of a #building# containing~~ #dwelling units# or #rooming units#, including common spaces such as hallways, lobbies, stairways, laundry facilities, recreation areas or storage areas. ~~,including~~ A #residence# may, for example consist of one-family or two-family houses, multiple dwellings, boarding or rooming houses, or #apartment hotels#. However, # residences# do not include:

(a) such transient accommodations as #transient hotels#, #motels# or #tourist cabins#, or #trailer camps#;

(b) #non-profit hospital staff dwellings#; or

(c) student dormitories, fraternity or sorority student houses, monasteries or convents, sanitariums, nursing homes, or other living or sleeping accommodations in #community facility buildings# or portions of #buildings# used for #community facility uses#.~~; or~~

~~(d) in a #mixed building#, that part of the #building# used for any non-#residential uses#, except #accessory# to #residential uses#.~~

* * *

Residence District

A "Residence District" includes any district whose designation begins with the letter "R."

For example, ~~A~~an "~~R1~~R6" District includes any district whose designation begins with the symbol "~~R1~~R6."

~~An "R3" District includes any district whose designation begins with the symbol "R3."~~

~~An "R7" District includes any district whose designation begins with the symbol "R7."~~

~~An "R10" District includes any district whose designation begins with the symbol "R10."~~

~~Residence, single-family~~

~~A "single-family residence" is a #building# containing only one #dwelling unit#, and occupied by only one #family#.~~

~~Residence, two-family~~

~~A "two-family residence" is a #building# containing only two #dwelling units#, and occupied by only two #families#.~~

Residential building ~~– see Building, residential~~

A "residential building" is a #building# used only for a #residential use#.

* * *

* * *

Semi-detached (building)

A "semi-detached" #building# is a #building# that #abuts# ~~or shares a party wall with~~ only one other ~~another~~ #building#, other than an #attached building#, on an adjoining #zoning lot#, along only one #side lot line# and which is surrounded on all other sides ~~but one~~ by #yards#, other open areas, or #street lines# ~~on the #zoning lot#~~.

* * *

Sidewalk cafe

A "sidewalk cafe" is a portion of an eating or drinking place that is located on a public sidewalk, and as further defined in Section 20-223, subdivision (a), of the Administrative Code, and is either an #enclosed#, #unenclosed# or #small sidewalk cafe#~~, as defined in this Section~~.

* * *

Single-family residence ~~– see Residence, single-family~~

A "single-family residence" is a #building# containing only one #dwelling unit#, and occupied by only one #family#.

* * *

Special 125th Street District

The "Special 125th Street District" is a Special Purpose District designated by the number "125" in which special regulations set forth in Article IX, Chapter 7, apply. ~~The #Special 125th Street District# appears on the #zoning maps# superimposed on other districts and its regulations supersede, supplement and modify those of the districts upon which it is superimposed.~~

Special Battery Park City District

The "Special Battery Park City District" is a Special Purpose District designated by the letters "BPC" in which special regulations set forth in Article VIII, Chapter 4, apply ~~to all #development#~~.

Special Bay Ridge District

The "Special Bay Ridge District" is a Special Purpose District designated by the letters "BR" in which special regulations set forth in Article XI, Chapter 4, apply. ~~The #Special Bay Ridge District# appears on the #zoning maps# superimposed on other districts and its regulations supplement or modify those of the district on which it is superimposed.~~

Special City Island District

The "Special City Island District" is a Special Purpose District designated by the letters "CD" in which special regulations set forth in Article XI, Chapter 2, apply. ~~The #Special City Island District# appears on the #zoning maps# superimposed on other districts and its regulations supplement or modify those of the districts on which it is superimposed.~~

Special Clinton District

The "Special Clinton District" is a Special Purpose District designated by the letters "CL" in which special regulations set forth in Article IX, Chapter 6, apply. ~~The #Special Clinton District# appears on the #zoning maps# superimposed on other districts and its regulations supplement or supersede those of the districts on which it is superimposed.~~

Special College Point District

The “Special College Point District” is a Special Purpose District designated by the letters “CP” in which special regulations set forth in Article XII, Chapter 6, apply. ~~The #Special College Point District# appears on the #zoning maps# superimposed on other districts and its regulations supplement or supersede those of the districts on which it is superimposed.~~

Special Coney Island District

The #Special Coney Island District# is a Special Purpose District designated by the letters “CI” in which special regulations set forth in Article XIII, Chapter 1, apply. ~~The #Special Coney Island District# appears on the #zoning maps# superimposed on other districts and, where indicated, its regulations supplement, modify and supersede those of the districts on which it is superimposed, provided that its regulations shall not apply in Parcel 1 of the Coney East Subdistrict, which shall be governed by the provisions of the underlying C7 District~~.

* * *

Special Downtown Brooklyn District

The "Special Downtown Brooklyn District" is a Special Purpose District designated by the letters "DB" in which special regulations set forth in Article X, Chapter 1, apply. ~~There are two subdistricts within the #Special Downtown Brooklyn District#: the Atlantic Avenue Subdistrict and the Fulton Mall Subdistrict. The #Special Downtown Brooklyn District# appears on the #zoning maps# superimposed on other districts and its regulations supplement and modify those of the districts upon which it is superimposed.~~

Special Downtown Jamaica District

The "Special Downtown Jamaica District" is a Special Purpose District designated by the letters "DJ" in which special regulations set forth in Article XI, Chapter 5, apply. ~~The #Special Downtown Jamaica District# and its regulations supplement, modify and supersede those of the districts on which it is superimposed.~~

Special Forest Hills District

The "Special Forest Hills District" is a Special Purpose District designated by the letters "FH" in which special regulations set forth in Article VIII, Chapter 6, apply. ~~The #Special Forest Hills District# appears on the #zoning maps# superimposed on other districts and its regulations supersede, supplement and modify those of the districts upon which it is superimposed.~~

Special Garment Center District

The "Special Garment Center District" is a Special Purpose District designated by the letters "GC" in which special regulations set forth in Article XII, Chapter 1, apply. ~~The #Special Garment Center District# appears on the #zoning maps# superimposed on other districts, and its regulations supplement or supersede those of the districts on which it is superimposed.~~

Special Grand Concourse Preservation District

The "Special Grand Concourse Preservation District" is a Special Purpose District designated by the letter "C" in which regulations set forth in Article XII, Chapter 2, apply. ~~The #Special Grand Concourse Preservation District# appears on the #zoning maps# superimposed on other districts and, where indicated, its regulations supersede those of the districts on which it is superimposed.~~

Special Harlem River Waterfront District

The "Special Harlem River Waterfront District" is a Special Purpose District designated by the letters "HRW" in which special regulations set forth in Article VIII, Chapter 7, apply. ~~The #Special Harlem River Waterfront District# appears on the #zoning maps# superimposed on other districts and its regulations supplement and supersede those of the districts on which it is superimposed.~~

Special Hillsides Preservation District

The "Special Hillsides Preservation District" is a Special Purpose District ~~mapped in Staten Island~~ designated by the letters "HS" in which special regulations set forth in Article XI, Chapter 9, apply ~~to all #developments#, #enlargements# or #site alterations#~~. ~~The #Special Hillsides Preservation District# appears on the #zoning maps# superimposed on other districts, and its regulations supplement or modify those of the districts on which it is superimposed.~~

Special Hudson Yards District

The "Special Hudson Yards District" is a Special Purpose District designated by the letters "HY" in which special regulations set forth in Article IX, Chapter 3, apply ~~to all #developments#~~. ~~The #Special Hudson Yards District# appears on the #zoning maps# superimposed on other districts and its regulations supplement and supersede those of the districts on which it is superimposed.~~

Special Hunts Point District

The "Special Hunts Point District" is a Special Purpose District designated by the letters "HP" in which special regulations set forth in Article X, Chapter 8, apply ~~to all #developments#~~. ~~The #Special Hunts Point District# appears on the #zoning maps# superimposed on other districts and its regulations supplement and supersede those of the districts on which it is superimposed.~~

Special Limited Commercial District

The "Special Limited Commercial District" is a Special Purpose District designated by the letters "LC" in which special regulations set forth in Article VIII, Chapter 3, apply ~~to all #developments#. The #Special Limited Commercial District# appears on the #zoning maps# superimposed on other districts, and its regulations supplement those of the districts on which it is superimposed.~~

~~#Special Limited Commercial Districts# are confined to #Commercial Districts# within areas or portions of areas established by the Landmarks Preservation Commission as "Historic Districts" pursuant to Chapters 8A or 63 of the New York City Charter and Chapter 8A of the New York City Administrative Code.~~

Special Lincoln Square District

The "Special Lincoln Square District" is a Special Purpose District designated by the letter "L" in which special regulations set forth in Article VIII, Chapter 2, apply ~~to all #developments#. The #Special Lincoln Square District# appears on the #zoning maps# superimposed on other districts, and its regulations supplement those of the districts on which it is superimposed.~~

Special Little Italy District

The "Special Little Italy District" is a Special Purpose District designated by the letters "LI " in which special regulations, set forth in Article X, Chapter 9, apply ~~to all #developments#, #enlargements#, changes of #use#, #extensions# and alterations as set forth therein. The #Special Little Italy District# and its regulations supplement or supersede those of the districts on which it is superimposed.~~

Special Long Island City Mixed Use District

The "Special Long Island City Mixed Use District" is a Special Purpose District designated with the letters "LIC" in which regulations set forth in Article XI, Chapter 7, apply. ~~There are four special subdistricts within the #Special Long Island City Mixed Use District#: the Hunters Point Subdistrict, the Court Square Subdistrict, the Queens Plaza Subdistrict and the Dutch Kills Subdistrict. The #Special Long Island City Mixed Use District# and its regulations supplement, modify and supersede those of the districts on which it is superimposed.~~

Special Lower Manhattan District

The "Special Lower Manhattan District" is a Special Purpose District designated by the letters "LM" in which special regulations set forth in Article IX, Chapter 1, apply ~~to all #developments#. The #Special Lower Manhattan District# appears on the #zoning maps# superimposed on other districts, and its regulations supplement or modify those of the districts on which it is superimposed.~~

Special Madison Avenue Preservation District

The "Special Madison Avenue Preservation District" is a Special Purpose District designated by the letters "MP" in which special regulations set forth in Article IX, Chapter 9, apply ~~to all #developments#. The #Special Madison Avenue Preservation District# and its regulations supplement or supersede those of the districts on which it is superimposed.~~

Special Manhattanville Mixed Use District

The “Special Manhattanville Mixed Use District” is a Special Purpose District designated by the

letters “MMU” in which special regulations set forth in Article X, Chapter 4, apply. ~~The #Special Manhattanville Mixed Use District# appears on the #zoning maps# superimposed on other districts and, where indicated, its regulations supplement, modify and supersede those of the districts on which it is superimposed.~~

Special Midtown District

The "Special Midtown District" is a Special Purpose District designated by the letters "MiD" in which special regulations set forth in Article VIII, Chapter 1, apply. ~~The #Special Midtown District# appears on the #zoning maps# superimposed on other districts, and its regulations supplement and modify those of the districts on which it is superimposed.~~

* * *

Special Natural Area District

The "Special Natural Area District" is a Special Purpose District designated by the letters "NA" in which special regulations set forth in Article X, Chapter 5, apply. ~~The #Special Natural Area District# appears on the #zoning maps# superimposed on other districts, and its regulations supplement or modify those of the districts on which it is superimposed.~~ The #Special Natural Area District# includes any district whose designation begins with the letters "NA”.

~~#Special Natural Area Districts# may be mapped only in areas where outstanding #natural features# or areas of natural beauty are to be protected. The preservation of such areas is important because they contain areas of special ecological significance, interesting geological formulations and rock outcrops, unique aquatic features such as tidal wetlands, unique topographic features such as palisades, valleys and hills, important plant life such as glaciated oak-chestnut forests or because they serve as habitats for native flora and fauna. A #Special Natural Area District# may include one or more #natural features#.~~

~~A #public park# may be included in a #Special Natural Area District# only where it is part of a designated larger natural ecological system.~~

Special Ocean Parkway District

The "Special Ocean Parkway District" is a Special Purpose District designated by the letters "OP" in which special regulations set forth in Article XI, Chapter 3, apply. ~~The #Special Ocean Parkway District# appears on the #zoning maps# superimposed on other districts and its regulations supplement or modify those of the districts on which it is superimposed.~~

~~The Subdistrict of the #Special Ocean Parkway District# is identified in Appendix A in Article XI, Chapter 3. In addition to the requirements of Sections 113-10 through 113-40, the special regulations set forth in Sections 113-50 through 113-57, inclusive, shall apply to the subdistrict.~~

Special Park Improvement District

The "Special Park Improvement District" is a Special Purpose District designated by the letters "PI" in which special regulations set forth in Article IX, Chapter 2, apply ~~to all #developments#. The #Special Park Improvement District# and its regulations supplement or supersede those of the districts on which it is superimposed.~~

Special Planned Community Preservation District

The "Special Planned Community Preservation District" is a Special Purpose District designated by the letters "PC" in which special regulations set forth in Article X, Chapter 3, apply ~~to all districts that are at least 1.5 acres and contain a minimum of three #buildings#; were substantially~~

~~designed and developed as a unit with substantial clustered #open space# and related #commercial uses# available to all residents of the District under the regulations of the Zoning Resolution prior to December 15, 1961; were considered to be worthy of such preservation by the City Planning Commission and the Board of Estimate, or its successor; and established pursuant to Section 103-01. The #Special Planned Community Preservation District# and its regulations supplement or modify those of the districts on which it is superimposed.~~

Special Scenic View District

The "Special Scenic View District" is a Special Purpose District designated by the letters "SV" in which the special regulations set forth in Article X, Chapter 2, apply ~~to all #developments#, #enlargements# and #signs#. Each #Special Scenic View District# shall appear on the #zoning maps# superimposed on other districts, when designated, and its regulations supplement or modify those of the districts on which it is superimposed. The #Special Scenic View District# is that portion of the area beneath a #view plane# where the regulations of this Chapter shall apply~~. The #Special Scenic View District# includes any district whose designation begins with letters "SV". ~~The boundaries of each #Special Scenic View District# shall be described and made part of this Chapter.~~

~~#Special Scenic View Districts# may be mapped only in areas where the control of the height of a #building or other structure# and #signs# is necessary to preserve outstanding #scenic views# from a mapped #public park# or an esplanade or a mapped public place.~~

Special Sheepshead Bay District

The "Special Sheepshead Bay District" is a Special Purpose District designated by the letters "SB" in which special regulations set forth in Article IX, Chapter 4, apply. ~~The #Special Sheepshead Bay District# appears on the #zoning maps# superimposed on other districts, and its regulations supplement or modify those of the districts on which it is superimposed.~~

Special South Richmond Development District

The "Special South Richmond Development District" is a Special Purpose District designated by the letters "SR" in which special regulations set forth in Article X, Chapter 7, apply ~~to all #developments# or #site alterations# or subdivision of #zoning lots#. The #Special South Richmond Development District# appears on the #zoning maps# superimposed on other districts, and its regulations supplement or modify those of the districts on which it is superimposed.~~

Special Southern Hunters Point District

The “Special Southern Hunters Point District” is a Special Purpose District designated by the letters “SHP” in which special regulations set forth in Article XII, Chapter 5, apply. ~~The #Special Southern Hunters Point District# appears on the #zoning maps# superimposed on other districts and its regulations supersede, supplement and modify those of the districts upon which it is imposed.~~

Special St. George District

The “Special St. George District” is a Special Purpose District designated by the letters “SG” in which special regulations set forth in Article XII, Chapter 8, apply. ~~The #Special St. George District# appears on the #zoning maps# superimposed on other districts and its regulations supplement or supersede those of the districts on which it is superimposed.~~

Special Stapleton Waterfront District

The "Special Stapleton Waterfront District" is a Special Purpose District designated by the letters "SW" in which special regulations set forth in Article XI, Chapter 6, apply. ~~The #Special Stapleton Waterfront District# appears on the #zoning maps# superimposed on other districts and its regulations supplement or supersede those of the districts on which it is superimposed.~~

Special Transit Land Use District

A "Special Transit Land Use District" is a Special Purpose District designated by the letters "TA" in which special regulations set forth in Article IX, Chapter 5, apply ~~to all #developments#. The #Special Transit Land Use District# and its regulations supplement or supersede those of the districts on which it is superimposed.~~

~~#Special Transit Land Use Districts# may be mapped in the vicinity of existing or proposed subway stations to provide easements to facilitate pedestrian access or improve access of light and air to subway mezzanines and stations.~~

Special Tribeca Mixed Use District

The "Special Tribeca Mixed Use District" is a Special Purpose District designated by the letters "TMU" in which special regulations set forth in Article XI, Chapter 1, apply. ~~The #Special Tribeca Mixed Use District# appears on the #zoning maps# superimposed on other districts, and its regulations supplement or supersede those of the districts on which it is superimposed.~~

Special Union Square District

The "Special Union Square District" is a Special Purpose District, designated by the letters "US" in which special regulations set forth in Article XI, Chapter 8, apply. ~~The #Special Union Square District# appears on the #zoning maps# superimposed on other districts, and its regulations supplement and modify those of the districts on which it is superimposed.~~

Special United Nations Development District

The "Special United Nations Development District" is a Special Purpose District designated by the letter "U" in which special regulations set forth in Article VIII, Chapter 5, apply. ~~The #Special United Nations Development District# appears on the #zoning maps# superimposed on other districts, and where indicated, its regulations supersede those of the districts on which it is superimposed.~~

Special West Chelsea District

The “Special West Chelsea District” is a Special Purpose District designated by the letters “WCh” in which special regulations set forth in Article IX, Chapter 8, apply. ~~The #Special West Chelsea District# appears on the #zoning maps# superimposed on other districts and, where indicated, its regulations supplement or supersede those of the districts on which it is superimposed.~~

Special Willets Point District

The “Special Willets Point District” is a Special Purpose District designated by the letters “WP” in which special regulations set forth in Article XII, Chapter 4, apply. ~~The #Special Willets Point District# appears on the #zoning maps# superimposed on other districts and its regulations supplement or supersede those of the districts on which it is superimposed.~~

Story

A "story" is that part of a #building# between the surface of a floor (whether or not counted for purposes of computing #floor area ratio#) and the ceiling immediately above. However, a #cellar# ~~is~~ shall not be considered a #story#. Furthermore, attic space that is not #floor area# pursuant to Section 12-10 (DEFINITIONS) shall not be considered a #story#.

Street

A "street" is:

(a) a way ~~shown~~ established on the City Map; or

(b) a way designed or intended for general public use, connecting two ways ~~shown~~ established on the City Map, that:

(1) performs the functions usually associated with a way ~~shown~~ established on the City Map;

(2) is at least 50 feet in width throughout its entire length; and

(3) is covenanted by its owner to remain open and unobstructed throughout the life of any #building# or #use# that depends thereon to satisfy any requirement of this Resolution; or

(c) any other open area intended for general public use and providing a principal means of approach for vehicles or pedestrians from a way ~~shown~~ established on the City Map to a #building or other structure#, that:

(1) performs the functions usually associated with a way ~~shown~~ established on the City Map;

(2) is at least 50 feet in width throughout its entire length;

(3) is approved by the City Planning Commission as a "street" to satisfy any requirement of this Resolution; and

(4) is covenanted by its owner to remain open and unobstructed throughout the life of any #building# or #use# that depends thereon to satisfy any requirement of this Resolution; or

(d) any other public way that on December 15, 1961, was performing the functions usually associated with a way ~~shown~~ established on the City Map; or

(e) a #covered pedestrian space# that directly links two parallel or substantially parallel ways ~~shown~~ established on the City Map, for which a #floor area# bonus may be awarded or was awarded pursuant to a prior definition of such amenity, that may, by certification of the City Planning Commission, be deemed to be a #street#, provided the Commission finds that:

(1) no portion of such space is located within 50 feet of the intersection of two ways ~~shown~~ established on the City Map;

(2) such space is unobstructed for a minimum width of 15 feet and a minimum height of 15 feet, except for enclosures at the entrances;

(3) such space is located at an elevation no more than five feet above or below #curb level#; and

(4) the space functions as a #street# providing access to another #street#, shops and other #uses#, and that such access is graphically and visually evident to the pedestrian.

All provisions of this Resolution shall continue to be applicable to such space without being modified, varied or affected by the qualification of such space as a #street#.

The City Planning Commission may prescribe appropriate conditions and safeguards to achieve public utilization of the #street#.

For purposes of paragraphs (a), (b), (c) and (d) of this definition, a #private road#, or a driveway that serves only to give vehicular access to an #accessory# parking or loading facility, or to allow vehicles to take on or discharge passengers at the entrance to a #building#, shall not be considered a #street#.

* * *

~~Street walls, aggregate width of~~

~~The "aggregate width of street walls" at any given level is the sum of the maximum widths of all #street walls# of a #building# within 50 feet of a #street line#. The width of a #street wall# is the length of the #street line# from which, when viewed directly from above, lines perpendicular to the #street line# may be drawn to such #street wall#.~~

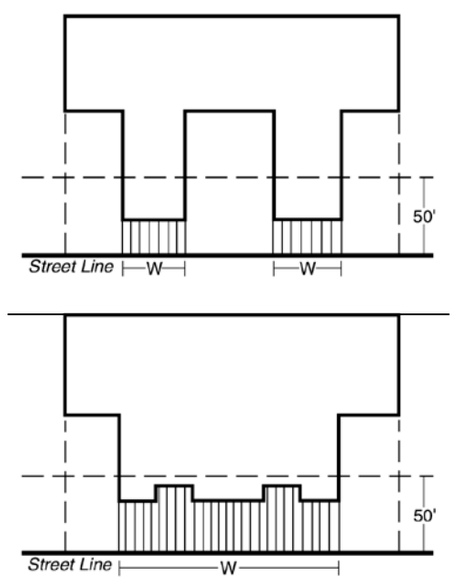

W - The *aggregate width of street walls*

~~AGGREGATE WIDTH OF STREET WALLS~~

* * *

Trailer camp

A "trailer camp" is a ~~tract of land~~ #zoning lot# or portion thereof used or designated for the #use# of two or more #trailers#.

Transient hotel - see Hotel, transient

Two-family residence ~~- see Residence, two-family~~

A "two-family residence" is a #building# containing not more than two #dwelling units#, and

occupied by only two #families#.

* * *

Use

A "use" is:

(a) any purpose for which a #building or other structure# or an open tract of land may be designed, arranged, intended, maintained or occupied; or

(b) any activity, occupation, business or operation carried on, or intended to be carried on, in a #building or other structure# or on an open tract of land.

* * *

Zero lot line building

A "zero lot line building" is a #building# that #abuts# only one #side lot line# and does not #abut# another #building# on the same or an adjoining #zoning lot# and which is surrounded on all sides but one by #yards#, other open area or #street lines# on the #zoning lot#. However, #accessory buildings# permitted pursuant to Section 23-44 (Permitted Obstructions in Required Yards or Rear Yard Equivalents) may be permitted to #abut# a #zero lot line building# on an adjoining #zoning lot#.

Zoning lot

A "zoning lot" is either:

(a) a lot of record existing on December 15, 1961 or any applicable subsequent amendment thereto;

(b) a tract of land, either unsubdivided or consisting of two or more contiguous lots of record, located within a single #block#, which, on December 15, 1961 or any applicable subsequent amendment thereto, was in single ownership;

(c) a tract of land, either unsubdivided or consisting of two or more lots of record contiguous for a minimum of ten linear feet, located within a single #block#, which at the time of filing for a building permit (or, if no building permit is required, at the time of the filing for a certificate of occupancy) is under single fee ownership and with respect to which each party having any interest therein is a party in interest (as defined herein); or

(d) a tract of land, either unsubdivided or consisting of two or more lots of record contiguous for a minimum of ten linear feet, located within a single #block#, which at the time of filing for a building permit (or, if no building permit is required, at the time of filing for a certificate of occupancy) is declared to be a tract of land to be treated as one #zoning lot# for the purpose of this Resolution. Such declaration shall be made in one written Declaration of Restrictions covering all of such tract of land or in separate written Declarations of Restrictions covering parts of such tract of land and which in the aggregate cover the entire tract of land comprising the #zoning lot#. Any Declaration of Restrictions or Declarations of Restrictions which individually or collectively cover a tract of land are referred to herein as "Declarations". Each Declaration shall be executed by each party in interest (as defined herein) in the portion of such tract of land covered by such Declaration (excepting any such party as shall have waived its right to execute such Declaration in a written instrument executed by such party in recordable form and recorded at or prior to the recording of the Declaration). Each Declaration and waiver of right to execute a Declaration shall be recorded in the Conveyances Section of the Office of the City Register or, if applicable, the County Clerk's Office of the county in which such tract of land is located, against each lot of record constituting a portion of the land

covered by such Declaration.

A #zoning lot#, therefore, may or may not coincide with a lot as shown on the official tax map of the City of New York, or on any recorded subdivision plat or deed.

Parcels within City-owned tracts of land located in Broad Channel within the boundaries of Community Board 14 in the Borough of Queens that were numerically identified for leasing purposes on maps filed in the Office of Borough President prior to December 15, 1961, may be considered as individual lots of record as of September 10, 1981.

(e) For purposes of the provisions of paragraph (c) hereof:

(1) Prior to issuing a building permit or a certificate of occupancy, as the case may be, the Department of Buildings shall be furnished with a certificate issued to the applicant therefor by a title insurance company licensed to do business in the State of New York showing that each party having any interest in the subject tract of land is a party in interest (as defined herein); except that where the City of New York is a fee owner, such certificate may be issued by the New York City Law Department and

(2) A "party in interest" in the tract of land shall include only (W) the fee owner thereof, (X) the holder of any enforceable recorded interest superior to that of the fee owner and which could result in such holder obtaining possession of all or substantially all of such tract of land, (Y) the holder of any enforceable recorded interest in all or substantially all of such tract of land which would be adversely affected by the #development# thereof and (Z) the holder of any unrecorded interest in all or substantially all of such tract of land which would be superior to and adversely affected by the # development # thereof and which would be disclosed by a physical inspection of the tract of land.

(f) For purposes of the provisions of paragraph (d) hereof:

(1) Prior to issuing a building permit or a certificate of occupancy, as the case may be, the Department of Buildings shall be furnished with a certificate issued to the applicant therefor by a title insurance company licensed to do business in the State of New York showing that each party in interest (excepting those parties waiving their respective rights to join therein, as set forth in this definition) has executed the Declaration and that the same, as well as each such waiver, have been duly recorded, except that where the City of New York is a fee owner, such certificate may be issued by the New York City Law Department;

* * *

Article I
Chapter 3
Comprehensive Off-Street Parking Regulations in Community Districts 1, 2, 3, 4, 5, 6, 7 and 8 in the Borough of Manhattan and a Portion of Community Districts 1 and 2 in the Borough of Queens

* * *

13-01
Applicability

In Manhattan Community Districts 1, 2, 3, 4, 5, 6, 7 and 8, and the portion of Queens Community Districts 1 and 2 bounded by Queens Plaza North, 21st Street, 41st Avenue, 29th Street, 40th Road, Northern Boulevard, 43rd Street, Skillman Avenue, 39th Street, 48th Avenue, 30th Street, 49th Avenue, Dutch Kills Canal, Newtown Creek, the East River, the westerly prolongation of 50th Avenue, Center Boulevard, 49th Avenue, Fifth Street, Anable Basin, and the East River ("Long Island City subject area"), #accessory# off-street parking spaces, #public parking lots# and #public parking garages# shall be #used#, ~~or~~ #developed# or #enlarged# in accordance with the provisions of this Chapter, except as otherwise provided in Section 13-011 (Exceptions).

The provisions of the underlying district shall apply, except where modified by the provisions of this Chapter. In the event of a conflict between the provisions of this Chapter and ~~those contained in special purpose district regulations or Sections 26-15 (Curb Cuts) or 37-30 (STREETSCAPE)~~ any other Chapter of this Resolution, the more restrictive provisions shall apply. For the purpose herein, the more restrictive provisions shall be considered those which permit the:

(a) fewest number of parking spaces;

(b) most exclusive use of parking spaces; and

(c) most limited location of curb cuts.

* * *

13-10
PERMITTED ACCESSORY OFF-STREET PARKING SPACES

* * *

13-12
Residential Development

#Accessory# off-street parking spaces are permitted only for ~~new #residential~~ #developments# or #enlargements# containing #residential use#, as follows:

(a) For the area south of 60th Street and its prolongations, the number of #accessory# off-street parking spaces shall not exceed 20 percent of the number of new #dwelling units# contained in the #development# or #enlargement# or 200 spaces, whichever is less.

(b) For the area north of 60th Street and its prolongations in Community Districts 7 and 8, the number of #accessory# off-street parking spaces shall not exceed 35 percent of the number of new #dwelling units# contained in the #development# or #enlargement# or 200 spaces, whichever is less.

(c) For the Long Island City subject area, within an area bounded by 23rd Street, 41st Avenue, 29th Street, 40th Road, Northern Boulevard, 41st Avenue, the north railroad property line and Davis Street, the number of #accessory# off-street parking spaces shall not exceed 50 percent of the #dwelling units# contained in the #development# or #enlargement#, or 200 spaces, whichever is less.

Within the remaining portion of the Long Island City subject area, the number of #accessory# off-street parking spaces shall not exceed 100 percent of the #dwelling units# contained in the #development# or #enlargement#.

All such #accessory# off-street parking spaces shall be located within a #completely enclosed building# and shall be used exclusively by the occupants of the #residential development#~~,~~ or #enlargement# ~~, or conversion where permitted~~.

* * *

13-133
Community facility, commercial or manufacturing developments

For #community facility#, #commercial# or #manufacturing~~-#~~ developments# or #enlargements#, in Manhattan Community Districts 1, 2, 3, 4, 5, 6, 7 and 8, and the portion of the Long Island City subject area bounded by 23rd Street, 41st Avenue, 29th Street, 40th Road, Northern Boulevard, 41st Avenue, the north railroad property line, and Davis Street, the maximum number of #accessory# off-street parking spaces permitted for each #development# or #enlargement# shall not exceed one space per 4,000 square feet of #floor area# or 100 spaces, whichever is less. All such parking spaces shall be located within a #completely enclosed building# and shall be used exclusively by the tenants or employees of the #development# or #enlargement# and shall not be available to the public.

* * *

13-31
General Provisions

Except within an area bounded by 21st Street, 41st Avenue, 29th Street, 40th Road, Northern Boulevard, 41st Avenue, the north railroad property line, Crane Street and Jackson Avenue, notwithstanding any underlying district regulations, #public parking garages# with a maximum capacity of 150 spaces are permitted as-of-right within any zoning district within the Long Island City subject area subject to the regulations set forth in Section 13-32 (Additional Regulations for Permitted Public Parking Garages).

* * *

13-41
General Provisions

Except as otherwise set forth in this Section or by the provisions of Section 13-012 (Existing off-street parking facilities), no #accessory# off-street parking spaces are required for any #development# or #enlargement# in Manhattan Community Districts 1, 2, 3, 4, 5, 6, 7 and 8 or the Long Island City subject area.

13-42
Residential Development

#Accessory# off-street parking spaces are only required for ~~new #residential~~ public or publicly-assisted housing #developments# or #enlargements# in Manhattan Community Districts 1, 2, 3, 4, 5, 6, 7 and 8, only as set forth below:

* * *

(f) All such parking spaces shall be used exclusively by the occupants of the #residential development# or #enlargement# and occupants of nearby public or publicly-assisted housing projects, except that #car sharing vehicles# may occupy #accessory# off-street parking spaces; however, the number of spaces so occupied shall not exceed five spaces or 20 percent of all such parking spaces, whichever is greater. #Accessory residential# off-street parking spaces shall be made available to the occupants of the #residences# to which they are #accessory# within 30 days after written request is made to the landlord.

* * *

Article I
Chapter 4
Sidewalk Cafe Regulations

* * *

14-11
Locational Criteria for Enclosed Sidewalk Cafes

The regulations of this Section, governing clear path, clearance at intersection of #streets#, clearance from large obstructions and minimum distance between two cafes shall apply to all #enclosed sidewalk cafes#.

* * *

(c) Clearance from large obstructions

All #enclosed sidewalk cafes# shall be a minimum of 15 feet from large obstructions. For the purposes of this Section, large obstructions shall be bus stop shelters, newsstands, subway entrances or any other object greater than 15 square feet in area. The closed end of a subway entrance located along the #front lot line# may #abut# an #enclosed sidewalk cafe#.

* * *

Article I
Chapter 5
Residential Conversion ~~of~~ within Existing ~~Non-Residential~~ Buildings

15-00
GENERAL PURPOSES

Special regulations for the conversion ~~to dwelling units of non-residential buildings or portions thereof,~~ of non-residential floor area to residences have been established in order to promote and protect public health, safety and general welfare. These goals include, among others, the following specific purposes:

(a) to permit owners to increase the return on their investment in appropriate existing ~~non-residential~~ buildings by authorizing the conversion to ~~dwelling units~~ residences without requiring such ~~dwelling units~~ residences to conform to the provisions of Article II of this Resolution;

(b) to reduce the deleterious effects on commercial and manufacturing uses caused by the reduction of land and floor area available to such uses permitted under the provisions of this Chapter by providing relocation incentives for such uses;

(c) to protect important job-producing industries, particularly those with a unique social or economic relationship to the surrounding community;

(d) to provide sufficient space for commercial and manufacturing activities which are an integral part of New York City's economy;

(e) to provide for adequate returns to property owners by allowing more profitable residential use with a limited mix of commercial and manufacturing uses;

(f) to provide a new housing opportunity of a type and at a density appropriate to these Community Districts;

(g) to ensure the provision of safe and sanitary housing units in converted buildings; and

(h) to ensure the provision of adequate amenities in conjunction with residential development.

15-01
Applicability

In Manhattan Community Districts 1, 2, 3, 4, 5 and 6, Brooklyn Community Districts 1, 2, 6 and 8, and Queens Community Districts 1 and 2, ~~the~~ #conversions# ~~to #dwelling units# of non-#residential buildings#~~ in #buildings# or portions thereof, erected prior to December 15, 1961, shall be subject to the provisions of this Chapter.

In addition, in Manhattan Community District 1, in the area south of Murray Street and its easterly prolongation and the Brooklyn Bridge, ~~the~~ #conversions# ~~to #dwelling units# of non-#residential buildings#,~~ in #buildings#, or portions thereof, erected prior to January 1, 1977 shall be subject to the provisions of this Chapter. ~~Existing floor space used for mechanical equipment and not counted as #floor area# in non-#residential buildings# built #buildings# erected prior to January 1, 1977 may be converted to #dwelling units# under the provisions of this Chapter.~~

For the purposes of this Chapter, #conversion# shall mean the change of #non-residential floor area# to #residences# or #joint living-work quarters for artists#. #Conversions# shall also include the conversion of existing floor space used for mechanical equipment and not counted as #floor area# to #residences# or #joint living-work quarters for artists#.

All #conversions# to #residences# shall be permitted only in districts where #residential use# is allowed by the district regulations, or in those #manufacturing districts# where #residential use#

is allowed pursuant to this Chapter or by authorization or special permit. All #conversions# to #joint living-work quarters for artists# shall be permitted only in districts where such #use# is allowed by the district regulations.

The provisions of Article II, Chapter 8 shall not apply to #buildings# #converted# pursuant to the provisions of this Chapter.

However, ~~the~~ #conversions# ~~to #dwelling units# of non-#residential buildings# of~~ that meet all the requirements for ~~new~~ #residential #development# of Article II (Residence District Regulations) and are located in R4, R5, R6, R7, R8, R9, R10, C1, C2, C3, C4, C5 or C6 Districts ~~is~~ are exempt from the provisions of this Chapter. Except as modified by the express provisions of this Chapter, the regulations of the applicable zoning districts remain in effect.

~~New #d~~ Developments# or #enlargements# shall be in accordance with the applicable requirements of Article II and Article III, except as provided by authorization pursuant to Section 15-41 (Enlargements of Converted Buildings).

15-011
Applicability within Special Purpose Districts

The provisions of this Chapter shall apply in Special Purpose Districts in the Community Districts listed in Section 15-01, as may be modified in the provisions of such Special Purpose Districts, except that the Preservation Area of the #Special Clinton District# is excluded from the applicability of the provisions of this Chapter.

In Community Districts not listed in Section 15-01, the provisions of this Chapter shall apply in the following Special Purpose Districts:

~~The provisions of this Chapter shall apply in~~ any #Special Mixed Use District# as modified by Article XII, Chapter 3 (Special Mixed Use District)~~.~~;

~~The provisions of this Chapter shall apply in~~ the #Special Downtown Jamaica District# as modified by Article XI, Chapter 5 (Special Downtown Jamaica District) ~~.~~;

~~The provisions of this Chapter shall apply in~~ the #Special St. George District# as modified by Article XII, Chapter 8 (Special St. George District)~~.~~; and

~~The provisions of this Chapter shall apply in~~ the #Special Coney Island District# as modified by Article XIII, Chapter 1 (Special Coney Island District).

~~The Preservation Area of the #Special Clinton District# is excluded from the applicability of the provisions of this Chapter.~~

~~The provisions of this Chapter shall apply in the #Special Tribeca Mixed Use District# as modified by Article XI, Chapter 1 (Special Tribeca Mixed Use District).~~

15-012
Applicability within C6-1G, C6-2G, M1-5A or M1-5B Districts

~~The #conversion# to #dwelling units# of non-#residential buildings#,~~ #Conversions# in #buildings# or portions thereof, in C6-1G or C6-2G Districts shall be permitted only by special permit pursuant to Section 74-782 (Residential conversion within C6-1G, C6-2G, C6-2M, C6-4M, M1-5A, M1-5B, M1-5M and M1-6M Districts).

Except as specifically set forth in Sections 15-013 and 15-026, the provisions of this Chapter are not applicable in M1-5A or M1-5B Districts.

15-013

Building permits and variances issued before the effective date of amendment

(a) Building permits in Manhattan Community Districts 1, 2, 3, 4, 5 and 6

* * *

(2) for all #floor area# for which the Board has made a finding that, as of the date said building permit lapsed, there was substantial construction in compliance with the approved plans pursuant to which said lapsed permit has been granted. A finding of substantial construction shall not be made unless, as of the date said permit lapsed, the #floor area# was either vacant or occupied by #residential# or #joint living-work quarters for artists use#, and unless the expenditures prior to the date said permit lapsed were significant in proportion to the costs of construction of the entire project, not including the costs of acquisition, demolition, professional fees or financing. Notwithstanding anything to the contrary above, the building permit shall only be reinstated pursuant to the provisions of this Section, provided that for any portion of the #building# for which said permit is reinstated:

(i) the #conversion# shall comply with the provisions of Sections 15-12, 15-24, or 42-14 paragraph (D)(1)(e), as appropriate in the zoning district in which the #building# being #converted# is located, except that the Board may modify the requirements of Sections 15-12, 15-24, or 42-14 paragraph (D)(1)(e), provided that the rooftop open space was not permitted under said building permit and the Board determines that the roof either is unsuited for open space #use# or cannot be made suitable for open space #use# at a reasonable cost;

* * *

(c) Variances

If, before April 9, 1981, in Manhattan Community Districts 1, 2, 3, 4, 5 and 6, or before October 25, 1984, in Brooklyn Community Districts 1, 2, 6 and 8 and Queens Community Districts 1 and 2, a variance to permit the #conversion# of a #building# or portion thereof, to #residential# or #joint living-work quarters for artists use#, which variance has not lapsed pursuant to the provisions of Section 72-23, and a building permit was issued in accordance with the terms of said variance for such #conversion# by the Department of Buildings within two years of the grant of said variance, construction pursuant to such permit may be continued, without regard to the other provisions of this Chapter.

#Dwelling units# #converted# pursuant to the provisions of this Section which are not subject to the provisions of this Chapter shall also not be subject to the provisions of Section 32-42 (Location within Buildings).

* * *

15-021
Special use regulations

* * *

(e) In C6-1G and C6-2G Districts, in all #manufacturing# and #commercial buildings# except police stations, courthouses and fire houses, or portions thereof, erected prior to December 15, 1961, #residential use# shall not be permitted unless the City Planning Commission has granted a special permit pursuant to Section 74-782 (Residential conversion in C6-1G, C6-2G, C6-2M, C6-4M, M1-5A, M1-5B, M1-5M and M1-6M Districts). However, if the Chairperson of the City Planning Commission determines that #floor area# in such #buildings# was occupied for #residential use# on April 1, 1984, such #residential use# shall be permitted to remain and no special permit shall be required, provided that a complete application for determination of occupancy is filed by the owner of the #building# or the occupant of a #dwelling unit# in such #building# not

later than April 17, 1985.

15-022
Location within building

#Dwelling units# #converted# under the provisions of this Chapter are not subject to the provisions of Section 32-42 (Location Within Buildings).

15-023
Notice to residential tenants in mixed use buildings

The owner or developer of a #building# #converted# under the provisions of this Chapter and containing one or more #dwelling units# and one or more #commercial# or #manufacturing uses# above the first #story# shall be required to notify all prospective #residential# occupants of such #dwelling units# that:

(a) such #dwelling units# are located in a ~~mixed #use~~ #building# containing #commercial# or #manufacturing uses# which the City is committed to maintain; and

(b) such prospective occupants should make any investigation they deem necessary to determine that the conditions existing or permitted to exist are not offensive to such prospective occupant.

Prior to the issuance of a building permit, the owner or developer shall file an affidavit with the Department of Buildings that such notice will be provided in all #residential# leases and offering plans.

* * *

15-025
Double glazed windows

All #dwelling units# in #buildings# which contain one or more #uses# listed in Section 15-60 (REFERENCED COMMERCIAL AND MANUFACTURING USES) and #converted# under the provisions of this Chapter shall be required to have double glazing on all windows. However, #dwelling units# occupied by #residential# tenants on September 1, 1980, in Manhattan Community Districts 1, 2, 3, 4, 5 and 6, or in Brooklyn Community Districts 1, 2, 6 and 8, and Queens Community Districts 1 and 2, shall not be required to have double glazed windows.

* * *

15-10
REGULATIONS GOVERNING RESIDENTIAL CONVERSIONS ~~TO DWELLING UNITS OF NON-RESIDENTIAL~~ WITHIN EXISTING BUILDINGS IN RESIDENTIAL AND COMMERCIAL DISTRICTS, EXCEPT C6-2M AND C6-4M DISTRICTS

15-11
Bulk Regulations

For the #conversion# of ~~non-#residential buildings# to #dwelling units#,~~ non-#residential floor area# to #residences# the applicable density requirements shall be modified in accordance with the provisions of Section 15-111 (Number of permitted dwelling units), and the regulations governing #open space ratio#, #yards#, the minimum distance between two or more #buildings# on a single #zoning lot# and the minimum distance between windows and walls or #lot lines# are hereby superseded and replaced by the requirements of Sections 15-112 (Light and air provisions) and 15-12 (Open Space Equivalent).

15-111
Number of permitted dwelling units

The maximum number of #dwelling units# permitted shall be determined in accordance with the applicable district regulations. However, where the total #floor area# on the #zoning lot# exceeds the maximum #floor area# permitted by the applicable district regulations, such excess #floor area# may be #converted# in its entirety to ~~#dwelling units#~~ #residences#. Such excess #floor area# shall be included in the amount of #floor area# divided by the applicable factor in Section 23-20 (DENSITY REGULATIONS).

For the #conversion# to ~~#dwelling units# of non-#residential buildings#,~~ of non-#residential floor area# to #residences# ~~or portions thereof,~~ pursuant to Section 74-71 (Landmark Preservation), in C7, C8 and #Manufacturing Districts#, the maximum number of #dwelling units# shall equal the total #floor area# to be #converted# to #residential use# divided by the applicable factor listed in the following table. Fractions equal to or greater than three quarters resulting from this calculation shall be considered to be one #dwelling unit#.

MAXIMUM NUMBER OF DWELLING UNITS

District	Factor
C7 C8-1 C8-2 M1-1 M1-2 M2-1 M2-3 M3	680
C8-3 C8-4 M1-4 M1-5 M2-2 M2-4	740
M1-6	790

In addition, the following provisions shall apply:

No ~~#building#~~ #floor area# shall be #converted# to #rooming units#. #Dwelling units# may be distributed anywhere within a #building# provided that any portion of a #dwelling unit# located in a #cellar# shall also comply with the provisions of Section 15-112 (Light and air provisions.)

* * *

15-112
Light and air provisions

(a) Spaces other than #rooms#:

(1) Mezzanines shall be lit and ventilated in accordance with the provisions of Section 27-732 (natural light requirements) and Article 6 (standard of natural ventilation) of the New York City Building Code ~~subarticle 1202.0 and subarticle 1205.0 of the Administrative Code.~~

* * *

15-12
Open Space Equivalent

At least 30 percent of the gross roof area of a #building# containing 15 #dwelling units# shall be ~~developed~~ provided for recreational use. For each additional #dwelling unit#, 100 square feet of additional roof area shall be ~~developed~~ provided for recreational use, up to a maximum of 50 percent of the gross roof area. This recreational area shall be accessible to all the occupants of said #building# and their guests. No fees shall be charged to the occupants or their guests. The provisions of this Section may be modified pursuant to Section 15-30.

* * *

15-20

REGULATIONS GOVERNING RESIDENTIAL CONVERSIONS ~~TO DWELLING UNITS OF NON-RESIDENTIAL~~ WITHIN EXISTING BUILDINGS IN C6-2M, C6-4M, M1-5M AND M1-6M DISTRICTS

(a) The #lot area# requirements of the following Sections are hereby superseded and replaced with the requirements of Sections 15-21 and 15-22 for the #conversion# of ~~non-#residential buildings# to #dwelling units#~~ non-#residential floor area# to #residences# :

Sections 23-20 through 23-26 (DENSITY REGULATIONS);

Section 24-20 (APPLICABILITY OF DENSITY REGULATIONS TO ZONING LOTS CONTAINING BOTH RESIDENTIAL AND COMMUNITY FACILITY USES));

Section 35-40 (APPLICABILITY OF DENSITY REGULATIONS TO MIXED BUILDINGS); and

Section 54-31 (Enlargements or Conversions).

In addition, the regulations governing #open space ratio#, #yards#, the minimum distance between two or more #buildings# on a single #zoning lot# and the minimum distance between windows and walls or #lot lines# are hereby superseded and replaced by the requirements of Sections 15-23 and 15-24.

(b) In C6-2M, C6-4M, M1-5M and M1-6M Districts, the requirements of Section 15-21 (Use Regulations - Transfer of Preservation Obligations and Conversion Rights) may be waived by authorization of the City Planning Commission in connection with the #conversion# of all or any portion of a ~~non-#residential~~ #building# to a #residential use#, provided that:

(1) such ~~non-#residential~~ #building# is either a landmark or lies within a Historic District designated by the Landmarks Preservation Commission;

(2) any alterations to the subject #building#, required in connection with such #conversion# to #residential use#, have received a Certificate of Appropriateness or other permit from the Landmarks Preservation Commission;

(3) a program has been established for continuing maintenance that will result in the preservation of the subject #building# or #buildings# as evidenced by a report from the Landmarks Preservation Commission; and

(4) such ~~non-#residential~~ #buildings#, or portions thereof, being #converted# to #residential use#, shall comply with the density requirements set forth in Section 74-711 (Landmark preservation in all districts), paragraph (a)(3).

In order to grant an authorization, the City Planning Commission shall find that such waiver shall have minimal adverse effects on the conforming #uses# located within the #building# and in the surrounding area.

The City Planning Commission may prescribe appropriate additional conditions and safeguards in order to enhance the character of the ~~#development#~~ #building# and to minimize adverse effects on the character of the surrounding area.

15-21
Use Regulations - Transfer of Preservation Obligations and Conversion Rights

In C6-2M, C6-4M, M1-5M and M1-6M Districts, the #conversion# of #floor area# to ~~#dwelling units#~~ #residences# in existing ~~non-#residential~~ #buildings#, or portions thereof is permitted subject to the certification by the Chairperson of the City Planning Commission that #floor area# has been preserved for #commercial# or #manufacturing uses# in accordance with the provisions of this Section. ~~The applicant shall provide a copy of any application for a certification under~~

~~this Section to the #Industrial Loft Advisory Council#, c/o Mayor's Office of Economic Development. F~~or the purposes of this Section only, the following mixed-#use# areas are defined:

Southeast Chelsea - All C6-2M, C6-4M, M1-5M and M1-6M Districts between 13th Street and 23rd Street, and Park and Eighth Avenues.

Garment Center East - The C6-2M and C6-4M Districts located between West 33rd Street and West 35th Street, and between Seventh Avenue and Tenth Avenue.

15-211
Floor area preservation

The amount or configuration of #floor area# to be preserved may be modified in accordance with the provisions of Section 15-215 (Modification for existing dwelling units).

The amount of #floor area# to be preserved for permitted #commercial# or permitted #manufacturing uses# shall be in accordance with Table I of this Section, if the #floor area# to be #converted# is located in a C6-2M or C6-4M District, and in accordance with Table II of this Section, if the #floor area# to be #converted# is located in a M1-5M or M1-6M District, unless modified by the City Planning Commission pursuant to Section 15-51. Such #floor area# shall be comparable to the #floor area# to be #converted#, as required by Section 15-213.

Such #floor area# may be preserved in the #building# to be #converted#, or in any other #building# within the same mixed-#use# area, as defined in Section 15-21.

Except as provided in Section 15-215 (Modification for existing dwelling units), #floor area# may not be preserved on portions of floors. If the #floor area# which must be preserved includes a fraction of a floor, the next highest number of full floors must be preserved for permitted #commercial# or permitted #manufacturing uses#. #Floor area# used for #home occupations# may not be used to meet the requirements of #floor area# and #stories# which must be preserved for #commercial# or #manufacturing use#. No #accessory# living or sleeping accommodations shall be permitted in the #floor area# preserved for permitted #commercial# or permitted #manufacturing uses#.

All requirements for preservation of #floor area# shall be determined by the entire #lot area# of the #zoning lot#, and by the total #floor area# of the #building# to be #converted#, regardless of the amount of #floor area# being #converted# within the #building#. For the purposes of this Section, any portion of the #building# to be #converted# that has a #residential# certificate of occupancy shall be excluded from the #building's# total #floor area#.

Any #building# that has been partially #converted# pursuant to Section 15-21 and has complied with the preservation requirements of such Section, shall not be required to preserve additional #floor area# for any subsequent #conversion#.

TABLE 1
FOR CONVERSION IN C6-2M OR C6-4M DISTRICTS
FLOOR AREA PRESERVED FOR PERMITTED COMMERCIAL OR PERMITTED MANUFACTURING USE*

#Lot area#	Percentage of #building's# total #floor area# to be preserved
less than 5,000 sq. ft.	33.3%
5,000 sq. ft. or more but less than 10,000 sq. ft.	50.0%
10,000 sq. ft. or more	66.6%

TABLE II
FOR CONVERSION IN Ml-5M OR Ml-6M DISTRICTS
FLOOR AREA PRESERVED FOR PERMITTED COMMERCIAL OR PERMITTED MANUFACTURING USE*

#Lot area#	Percentage of #building's# total #floor area# to be preserved
less than 5,000 sq. ft.	33.3%
5,000 sq. ft. or more but less than 10,000 sq. ft.	66.6%
10,000 sq. ft. or more	66.6%

* All requirements for preservation of #floor area# shall be determined by the entire #lot area# of the #zoning lot#, and by the total #floor area# of the #building# to be #converted#, regardless of the amount of #floor area# being #converted# within the #building#.

15-212
Reduced floor area preservation

* * *

TABLE II
FOR CONVERSION IN M1-5M OR M1-6M DISTRICTS
REDUCED FLOOR AREA AND FLOORS PRESERVED FOR PERMITTED COMMERCIAL OR PERMITTED MANUFACTURING USE*

#Lot area#	Percentage of #building's# total #floor area# to be preserved
less than 5,000 sq. ft.	one floor, plus, in #buildings# of more than 6 #stories#, 25% of the #floor area# in excess of 6 #stories#
5,000 sq. ft. or more but less than 10,000 sq. ft.	50%
10,000 sq. ft. or more	50%

* All requirements for preservation of #floor area# shall be determined by the entire #lot area# of the #zoning lot#, and by the total #floor area# of the #building# to be #converted#, regardless of the amount of #floor area# being #converted# within the #building#.

15-213
Comparability

Where the #floor area# to be preserved is not located within the #building# to be #converted#, such #floor area# must be comparable to #floor area# in the #building# to be #converted#.

Comparability, shown by an affidavit from a professional engineer or a registered architect, licensed under the laws of the State of New York, shall exist where the #floor area# to be preserved meets the following criteria:

(a) Elevators: load and number

The load and number requirements of this paragraph shall not apply when the #floor area# to be preserved is located on the ground floor or has level access to a #street# or loading facility.

(1) Load

Each elevator shall have a minimum load of 2,000 pounds. The total load of all elevators servicing the #floor area# to be preserved shall be in accordance with the following ratio:

$$\frac{\text{Total load}}{\text{Gross \#floor area\# of \#building\# to be preserved}} \text{ is greater than or equal to 80\% of } \frac{\text{Total load}}{\text{Gross \#floor area\# of \#building\# to be \#converted\#}}$$

(2) Number

There shall be a minimum of two elevators. The number of elevators servicing the #floor area# to be preserved shall be in accordance with the following ratio:

$$\frac{\text{Number of elevators}}{\text{Gross \#floor area\# of \#building\# to be preserved}} \text{ is greater than or equal to 80\% of } \frac{\text{Number of elevators}}{\text{Gross \#floor area\# of \#building\# to be \#converted\#}}$$

Notwithstanding the above, where there is only one elevator servicing the #floor area# to be #converted#, there may be one elevator servicing the #floor area# to be preserved if the following exist:

(i) the #floor area# to be serviced by the elevator in the #building# to be preserved does not exceed the #floor area# serviced by the elevator in the #building# to be #converted# by more than 10 percent; and

(ii) the ratio of the volume of the elevator servicing the #floor area# to be preserved to the #floor area# to be preserved is at least 90 percent of the ratio of the volume of the elevator servicing the #floor area# to be #converted# to the #floor area# to be #converted#.

If the number of elevators required pursuant to the above ratio includes a fraction of an elevator, this fraction shall be rounded to the nearest whole number.

(b) Floor load

The floors shall have a minimum live load capacity of 100 pounds per square foot (100 psf).

(c) Size of floors

(1) The #floor area# shall be located on floors of not less than 3,000 square feet or 50 percent of the size of the floors in the #building# to be #converted#, whichever is greater.

(2) #Floor area# may not be preserved on portions of floors.

(d) Loading facilities

The loading facilities shall be at least equal in number to those in the #building# to be #converted#. In addition, if such #building# has an off-street loading dock, the #building# containing the #floor area# to be preserved must have such off-street loading facilities.

(e) Column spacing

There shall be a minimum distance between columns of 15 feet, measured on center. In addition, the average distance between columns shall not be less than 90 percent of the average distance between columns in the #building# to be #converted#.

(f) Height of #stories#

The #stories# shall have an average minimum height of ten feet.

The Chairperson of the City Planning Commission may authorize a modification of the requirements listed in paragraphs (a), (c)(1), or (d) above pursuant to the regulations of Section 15-30 (MINOR MODIFICATIONS) paragraph (c).

15-214
Certification and other requirements of preservation and conversion

(a) Prior to the issuance of an alteration permit for the #conversion# of #floor area# to #residential use#, the Chairperson of the City Planning Commission shall certify compliance with the requirements of Section 15-21 upon proof of a legal commitment to preserve and maintain the required #floor area# for permitted #commercial# or permitted #manufacturing use#. Such legal commitment shall be executed by all parties having any interest in the #floor area# to be preserved as shown by a certificate issued by a title insurance company licensed to do business in the State of New York showing all such parties in interest.

* * *

(d) Any #building# that has been partially #converted# pursuant to Section 15-21 and has complied with the preservation requirements of such Section, shall not be required to preserve additional #floor area# for any subsequent #conversion#.

15-22
Number of Permitted Dwelling Units

(a) In #buildings# where #floor area is #converted# to #~~dwelling units~~ residences# under Section 15-21 (Use Regulations - Transfer of Preservation Obligations and Conversion Rights) where there is more than one #dwelling unit# per #story#, there shall be a minimum #dwelling unit# size of 1,200 square feet of interior #floor area# unless modified pursuant to Section 15-30 (MINOR MODIFICATIONS).

* * *

15-23
Light and Air Provisions

(a) Every #dwelling unit# shall meet the light and air requirements of Section 277 of the Multiple Dwelling Law.

(b) Mezzanines shall be lit and ventilated in accordance with the provisions of Section 27-

732 (natural light requirements) and Article 6 (standard of natural ventilation) of the New York City Building Code~~sub-article 1202.0 and sub-article 1205.0 of the Administrative Code.~~

(c) Width to depth ratio

Where there is more than one #dwelling unit# per #story#, the average width of each #dwelling unit# shall be at least one fourth of the depth. Depth is the farthest point within the #dwelling unit# from the exterior building wall containing windows used to meet the requirements of Section 15-23 (a) above, measured perpendicular to such building wall. Width is the distance between exterior #dwelling unit# walls measured perpendicular to the depth.

15-24
Open Space Equivalent

At least 30 percent of the gross roof area of a #building# containing 15 #dwelling units# shall be ~~#developed#~~ provided for recreational #use#. For each additional #dwelling unit#, 100 square feet of additional roof area shall be ~~#developed#~~ provided for recreational #use#, up to a maximum of 50 percent of the gross roof area. This recreational area shall be accessible to all the occupants of said #building# and their guests. No fees shall be charged to the occupants or their guests. The provisions of this Section may be modified pursuant to Section 15-30.

* * *

15-26
Collection of Residential and Commercial Refuse

All #residential# trash shall be consolidated with the trash from the #commercial# or #manufacturing use# tenants and collected in the same manner as the trash from such #commercial# or #manufacturing# tenants. Such collection shall be the responsibility of the owner of the #building# or portion thereof.

15-30
MINOR MODIFICATIONS

On application, the Chairperson of the City Planning Commission may grant minor modifications to the following provisions of this Chapter:

* * *

(c) The requirements of paragraphs (a) or (d) of Section 15-213 (Comparability) relating to comparability of elevators or loading facilities may be modified provided that the Chairperson of the City Planning Commission has administratively certified to the Department of Buildings that the elevators or loading facilities serving the #floor area# to be preserved provide facilities for #manufacturing# or #commercial uses# that are equivalent or superior to those serving the #floor area# to be #converted#.

The requirements of paragraph (c)(1) of Section 15-213 relating to comparability of size of floors may be modified provided that the Chairperson of the City Planning Commission has administratively certified to the Department of Buildings that the #floor area# to be preserved consists of floors that are of equivalent or larger size than the floors in the #building# to be #converted#.

A developer must send a copy of any request for modification pursuant to this Section to the applicable Community Board at least 20 days prior to the next regularly scheduled Board meeting. If the Community Board chooses to comment on such requests it must do so within 31 days of such notification.

* * *

15-41
Enlargements of Converted Buildings

In all #Commercial# and #Residence Districts#, for #enlargements# of ~~non-#residential~~ #buildings# #converted# to #~~dwelling units~~ residences#, the City Planning Commission may authorize:

(a) a waiver of the requirements of Section 15-12 (Open Space Equivalent) for the existing portion of the #building# #converted# to ~~#dwelling units#~~ #residences#; and

(b) the maximum #floor area ratio# permitted pursuant to Section 23-142 for the applicable district without regard for #height factor# or #open space ratio# requirements.

In order to grant such authorization, the Commission shall find that:

(1) the #enlarged building# is compatible with the scale of the surrounding area;

(2) open areas are provided on the #zoning lot# that are of sufficient size to serve the residents of the #building#. Such open areas, which may be located on rooftops, courtyards, or other areas on the #zoning lot#, shall be accessible to and usable by all residents of the #building#, and have appropriate access, circulation, seating, lighting and paving;

(3) the site plan includes superior landscaping for all open areas on the #zoning lot#, including the planting of #street trees#; and

(4) the #enlarged building# will not adversely affect structures or #open space# in the vicinity in terms of scale, location and access to light and air.

The Commission may prescribe additional conditions and safeguards to minimize adverse effects on the character of the surrounding area.

* * *

Article II
Chapter 2
Use Regulations

22-00
GENERAL PROVISIONS

In order to carry out the purposes and provisions of this Resolution, the #uses# of #buildings or other structures# and ~~of tracts of land~~ the open #uses# of #zoning lots#, or portions thereof, have been classified and combined into Use Groups. A brief statement is inserted at the start of each Use Group to describe and clarify the basic characteristics of that Use Group. Use Groups 1, 2, 3 and 4, including each #use# listed separately therein, are permitted in #Residence Districts# as indicated in Sections 22-11 to 22-14, inclusive.

The following chart sets forth the Use Groups permitted in the #Residence Districts#.

USE GROUPS PERMITTED IN RESIDENCE DISTRICTS

		Use Groups			
		Residential		Community Facilities	
Districts		1	2	3	4
#Single-family detached residences#	R1 R2	x		x	x
#Single-# and #two-family detached# and #zero lot line residences*#	R3A	x	x	x	x
#Single-# and #two-family detached residences#	R3X R4A R5A	x	x	x	x
#Single-# and #two-family detached# & #semi-detached residences#	R3-1	x	x	x	x
#Single-# and #two-family detached#,#semi-detached# and #zero lot line residences#	R4-1	x	x	x	x
#Single-# and #two-family residences# of all types	R4B	x	x	x	x
General #residences#*	R3-2 R4-R10	x	x	x	x

---

* #Zero lot line buildings# are not permitted in R3-2, R4 (except R4-1 and R4B), and R5 (except R5B and R5D) Districts.

Whenever a #use# is specifically listed in a Use Group and also could be construed to be incorporated within a more inclusive #use# listing, either in the same or another Use Group, the more specific listing shall control.

The #uses# listed in the various Use Groups set forth in Sections 22-11 to 22-14, inclusive, are also listed in alphabetical order in the Index at the end of this Resolution for the convenience of

those using this Resolution. Whenever there is any difference in meaning or implication between the text of these Use Groups and the text of the Index, the text of these Use Groups shall prevail.

Special regulations applying in the #waterfront area# are set forth in Article VI, Chapter 2.

In R10H Districts, an eating or drinking establishment, permitted pursuant to Section 72-21 (Findings Required for Variances), that operates a #sidewalk cafe# pursuant to the provisions of Article I, Chapter 4, may be #enlarged# into any open area that may exist between the #street wall# and the #street line#.

For the purposes of this Chapter, any #residence#, and any #accessory building abutting# such #residence# on the same #zoning lot#, shall be considered a single #building#.

22-10
USES PERMITTED AS-OF-RIGHT

22-11
Use Group 1

R1 R2 R3 R4 R5 R6 R7 R8 R9 R10

Use Group 1 consists of #single-family detached ~~residential development~~ residences#.

A. #Residential uses#

#Single-family detached residence#

B. #Accessory uses#

22-12
Use Group 2

R3 R4 R5 R6 R7 R8 R9 R10

Use Group 2 consists of all other types of ~~#residential development~~ residences#.

A. #Residential uses#

#Residences# of all kinds, including #apartment hotels# and #non-profit residences for the elderly#, except that:

(1) in ~~R3-A~~ R3A, R3X, R4A and R5A Districts, #residential uses# shall be limited to #single-# or #two-family detached residences# except that in R3A Districts single- or two-family #zero lot line buildings# are also permitted;

(2) in R3-1 and R4-1 Districts, #residential uses# shall be limited to #single-# or #two-family residences detached# or #semi-detached# except that in R4-1 Districts single- or two-family #zero lot line buildings# are also permitted;

(3) in R4B Districts, #residential uses# shall be limited to #single-# or #two-family residences# in #detached#, #semi-detached#, #attached#, or #zero lot line buildings#.

B. #Accessory uses#

22-13
Use Group 3

R1 R2 R3 R4 R5 R6 R7 R8 R9 R10

Use Group 3 consists of community facilities ~~which~~ that:

(1) may appropriately be located in #residential# areas to serve educational needs or to provide other essential services for the residents; or

(2) can perform their activities more effectively in a #residential# environment, unaffected by objectionable influences from adjacent industrial or general service #uses#; and

(3) do not create significant objectionable influences in #residential# areas.

A. Community facilities

~~*~~Colleges or universities[1], including professional schools but excluding business colleges or trade schools

~~*~~College or school student dormitories and fraternity or sorority student houses[1]

~~**~~Domiciliary care facilities for adults[2] under the jurisdiction of the New York State Board of Social Welfare which have secured certification by such agency~~.~~

Libraries, museums or non-commercial art galleries

Monasteries, convents or novitiates, without restrictions as to use for living purposes or location in relation to other #uses# ~~.~~

#Non-profit hospital staff dwellings# located on the same #zoning lot# as the non-profit or voluntary hospital and related facilities or on a separate #zoning lot# that is immediately contiguous thereto or would be contiguous but for its separation by a #street# or a #street# intersection.

Nursing homes and health-related facilities[3] as defined in Section 10 NYCRR 700.2(a) of the New York State Hospital Code, each of which have secured certification by the appropriate governmental agency~~: sanitariums; and~~ .

~~p~~Philanthropic or non-profit institutions with sleeping accommodations[3,4] ~~provided that the number of persons employed in central office functions shall not exceed 50, and the amount of #floor area# used for central office purposes shall not exceed 25 percent of the total #floor area# or 25,000 square feet, whichever is greater, except that in R1, R2, R3, R4, R5, R6 or R7 Districts, the amount of #floor area# used for central office purposes shall in no event exceed 25 percent of the total #floor area# ; . however, proprietary nursing homes, proprietary health-related facilities, proprietary domiciliary care facilities for adults and proprietary sanitariums are not permitted in R1 and R2 Districts.~~

Sanitariums[3,]

#Schools#

~~Furthermore, n~~ Nursing homes and health-related facilities are not permitted~~,~~ within the boundaries of any Community District in which one or more of the conditions set forth in Section 22-42 (Certification of Certain Community Facility Uses) applies except by special permit as set forth in Section 74-90~~, within the boundaries of any Community District designated by the City Planning Commission and Board of Estimate pursuant to Section 74-903 upon a finding that~~:

~~(1) the ratio between the number of beds for such #uses# in existence, under construction or approved toward construction by the appropriate federal or state governmental agency, to the population of the Community District compared to such ratio for other Community Districts shows a relative concentration of~~

~~facilities covered in this Section in the affected district; or~~

~~(2) a scarcity of land for general community purposes exists; or~~

~~(3) the incidence of construction of facilities for the last three years warrants review over these facilities because they threaten to disrupt the land use balance in the community.~~

~~#Schools#~~

B. #Accessory uses#

~~*~~[1] ~~A #use# in Use Group 3, marked with an asterisk, is~~ ~~n~~ Not permitted in R1 or R2 Districts as-of-right.

~~**~~ [2] ~~A #use# marked with a double asterisk is not permitted as-of-right and may only be~~ ~~p~~ Permitted only by special permit by the City Planning Commission ~~and Board of Estimate~~ pursuant to Section 74-90~~4~~ 3.

[3] Nursing homes, health related facilities, domiciliary care facilities for adults and sanitariums that are proprietary facilities are not permitted in R1 or R2 Districts.

[4] The number of persons employed in central office functions shall not exceed 50, and the amount of #floor area# used for such purposes shall not exceed 25 percent of the total #floor area#, or, in R8, R9 or R10 Districts, 25,000 square feet, whichever is greater.

22-14
Use Group 4

R1 R2 R3 R4 R5 R6 R7 R8 R9 R10

Use Group 4 consists primarily of community facilities ~~which~~ that:

(1) may appropriately be located in #residential# areas to provide recreational, religious, health, and other essential services for the residents; or

(2) can perform their activities more effectively in a #residential# environment, unaffected by objectionable influences from adjacent medium and heavy industrial #uses#; and

(3) do not create significant objectionable influences in #residential# areas.

Those open #uses# of land which are compatible with a #residential# environment are also included.

A. Community facilities

~~***~~Ambulatory diagnostic or treatment health care facilities[1], limited to public, private, for-profit or not-for-profit medical, health and mental health care facilities licensed by the State of New York, or a facility in which patients are diagnosed or treated by health care professionals, licensed by the State of New York ~~State Department of Education or successor agency~~ or by persons under the supervision of such licensee for medical, health or mental health conditions, and where such patients are ambulatory rather than admitted. Such facilities shall not include the practice of veterinary medicine, #physical culture or health establishments#, or ophthalmic dispensing. In #buildings# containing #residences#, such facilities shall be limited to locations below the level of the first #story# ceiling, except that such facilities may be located on a second #story# provided there is separate access from the outside or directly from a portion of such facility located on the ground floor.

*Clubs[2], except:

(a) clubs, the chief activity of which is a service predominantly carried on as a business;

(b) non-commercial outdoor swimming pool clubs; or

(c) any other non-commercial clubs with outdoor swimming pools located less than 500 feet from any #lot line#;or

(d) any activity or #use# listed within the definitions of either #adult physical culture establishments# or #physical culture or health establishments# in Section 12-10.

Community centers or settlement houses

Houses of worship, rectories or parish houses

Monasteries, convents or novitiates used only for living purposes, provided that such #use# is to be part of a group of #buildings# accommodating house of worship activities, #schools# or other house of worship facilities that existed on December 15, 1961, or any applicable subsequent amendment thereto, and that such #use# is to be located on the same #zoning lot# with one or more #buildings# in such group of #buildings# or on a #zoning lot# that is contiguous thereto or directly across the #street# on ~~that~~ which such #buildings# face.

Non-commercial recreation centers

#Non-profit hospital staff dwellings# restricted to location on the same #zoning lot# as the non-profit or voluntary hospital and related facilities or on a separate #zoning lot# immediately contiguous thereto

Non-profit or voluntary hospitals and related facilities, except animal hospitals

Philanthropic or non-profit institutions without sleeping accommodations excluding ambulatory diagnostic or treatment health care facilities listed in Use Group 4, provided that the number of persons employed in central office functions shall not exceed 50, and the amount of #floor area# used for central office purposes shall not exceed 25 percent of the total #floor area# or 25,000 square feet, whichever is greater, except that in R1, R2, R3, R4, R5, R6 or R7 Districts the amount of #floor area# used for central office purposes shall in no event exceed 25 percent of the total #floor area#

* Proprietary hospitals and related facilities[2], except animal hospitals

Seminaries

*Welfare centers[2]

B. Open #uses#

Agricultural #uses#, including greenhouses, nurseries, or truck gardens, provided that no offensive odors or dust are created, and that there is no sale of products not produced on the same #zoning lot#.

*Cemeteries[2]

Golf courses

*Outdoor tennis courts or ice skating rinks[2], provided that all lighting shall be directed away from nearby ~~#residential zoning lots#~~ #residences#

#Public parks# or playgrounds or private parks

~~**~~Railroad or transit rights-of-way[3]~~.~~

C. #Accessory uses#

---

[1] Not permitted in R1 or R2 Districts and, in R3A, R3X, R3-1, R4A, R4B or R4-1 Districts, limited to a maximum of 1,500 square feet of #floor area#

~~*~~ [2] ~~A #use# in Use Group 4, marked with an asterisk, is~~ ~~n~~Not permitted in R1 or R2 Districts as-of-right~~.~~

~~**~~ [3] Use of #railroad or transit air space# is subject to the provisions of Section 22-41 (Air Space over Railroad or Transit Rights-of-Way or Yard).

~~*** Not permitted in R1 or R2 Districts and, in R3A, R3X, R3-1, R4A, R4B or R4-1 Districts, limited to a maximum of 1,500 square feet of #floor area#.~~

22-20
USES PERMITTED BY SPECIAL PERMIT

* * *

4/22/09

22-22
By the City Planning Commission

In the districts indicated, the following #uses# are permitted by special permit of the City Planning Commission, in accordance with standards set forth in Article VII, Chapter 4, or as otherwise indicated in this Section.

R3 R4 R5 R6 R7 R8 R9 R10
Docks for ferries or water taxis as listed in Use Group 6 pursuant to Section 62-832

R1 R2 R3 R4 R5 R6 R7 R8 R9 R10
Domiciliary care facilities for adults

R1 R2 R3 R4 R5 R6 R7 R8 R9 R10
Fire stations [PRC-C]

R1 R2 R3 R4 R5 R6 R7 R8 R9 R10
Non-commercial clubs with outdoor swimming pools less than 500 feet from any #lot line#

R1 R2 R3 R4 R5 R6 R7 R8 R9 R10
Non-commercial outdoor swimming pool clubs

R1 R2 R3 R4 R5 R6 R7 R8 R9 R10
#Non-profit hospital staff dwellings# located not more than 1,500 feet from the non-profit or voluntary hospital

R1 R2 R3 R4 R5 R6 R7 R8 R9 R10
Nursing home and health related facilities in Community Districts ~~designated in Section 74-903~~ in which the conditions set forth in Section 22-42(Certification of Certain Community Facility Uses) apply. ~~The special permit provisions, however, shall not apply to~~ However, proprietary nursing homes, proprietary health related facilities and proprietary domiciliary care facilities for adults are not permitted in R1 and R2 Districts and the special permit provisions shall not apply to such facilities.

R1 R2 R3 R4 R5 R6 R7 R8 R9 R10
Nursing home and health related facilities in Community Districts ~~designated in Section 74-903~~ meeting the standards set forth in Section 22-42(Certification of Certain Community Facility Uses). ~~The special permit provisions, however, shall not apply to~~ However, proprietary nursing homes, proprietary health related facilities and proprietary domiciliary care facilities for adults are not permitted in R1 and R2 Districts and the special permit provisions shall not apply to such facilities.

* * *

22-30
SIGN REGULATIONS

* * *

22-321
Nameplates or identification signs

R1 R2 R3 R4 R5 R6 R7 R8 R9 R10

(a) For all #~~residential~~ buildings# containing #residences#, one nameplate, with an area not exceeding one square foot and indicating only the name or address of the occupant or a permitted occupation, is permitted for each #dwelling unit# or #rooming unit#.

(b) For multiple dwellings, including #apartment hotels#, or for permitted #non-#~~-~~ residential buildings or other structures# exclusive of hospitals and related facilities, one identification #sign#, with an area not exceeding 12 square feet and indicating only the name of the permitted #use#, the name or address of the #building#, or the name of the management thereof, is permitted. For #community facility uses#, except hospitals and related facilities, a bulletin board, with an area not exceeding 16 square feet, is also permitted. For any #sign# on awnings or canopies, the height of letters on any side of such awnings or canopies shall not exceed 12 inches.

(c) For hospitals and related facilities any number of identification or directional #signs# are permitted, provided the total #surface area# in square feet of all such #signs# shall not exceed 25 square feet on any one #street# frontage or 15 percent of such #street# frontage in feet, whichever is less. However, for #zoning lots# with more than one #building# that front upon the same #street#, each such #building# shall be permitted a #surface area# of 25 square feet. In addition to the aforementioned #signs#, either one directory or bulletin board, or combination thereof is permitted, not to exceed 50 square feet.

* * *

22-331
Permitted illuminated accessory signs for hospitals and related facilities

R1 R2 R3 R4 R5 R6 R7 R8 R9 R10

In all districts, as indicated, for hospitals and related facilities #illuminated# non-#flashing accessory signs# are permitted in all districts, subject to Section 22-34 (Additional Regulations). Any number of #illuminated# non-#flashing# identification or directional #signs# are permitted, provided that the total #surface area# in square feet of said #illuminated signs# or the combined total #surface area# in square feet of the #illuminated# and non-#illuminated# identification or directional #signs# does not exceed 25 square feet on any one #street# frontage or 15 percent of such #street# frontage in feet, whichever is less, and provided further that the Commissioner of Buildings determines that such #signs# are so located as to cause a minimum amount of light to be projected onto abutting or adjacent #residences#. However, for #zoning lots# with more than one #building# that front upon the same #street#, each such #building# shall be permitted a #surface area# of 25 square feet.

In addition to #illuminated# or non-#illuminated accessory signs#, one illuminated non-flashing

directory or bulletin board or combination thereof is permitted in lieu of a non-illuminated directory or bulletin board or combination thereof provided that the total #sign# area does not exceed 50 square feet and provided further that the Commissioner of Buildings determines that such #sign# is so located as to minimize the amount of light projected on the abutting or adjacent #residences#.

* * *

22-40
SUPPLEMENTARY USE REGULATIONS

* * *

22-412
Use of railroad or transit air space

R1 R2 R3 R4 R5 R6 R7 R8 R9 R10

(a) In all districts, as indicated, #railroad or transit air space# may be #developed# or used only for a permitted #use accessory# to the railroad or transit right-of-way or yard, a #use# permitted by the City Planning Commission as set forth in Section 74-681 (Development within or over a railroad or transit right-of-way or yard), or a railroad passenger station permitted by the City Planning Commission as set forth in Section 74-62 (Railroad Passenger Stations) unless the right-of-way or yard or portion thereof is no longer required for railroad or transit #use# as set forth in paragraph (b) below.

If any #building or other structure# constructed in such #railroad or transit air space# in accordance with the provisions of Section 74-681 (Development within or over a railroad or transit right-of-way or yard) is #enlarged# or replaced by a new #building or other structure#, the provisions of this Section shall apply to such #enlargement# or replacement.

However, any #use# legally established in such #railroad or transit air space# in accordance with the provisions of Section 74-681 (Development within or over a railroad or transit right-of-way or yard) may be changed to another #use# listed in a permitted Use Group, and no additional special permit from the City Planning Commission shall be required for such change of #use#.

Any #building or other structure# within or over a railroad or transit right-of-way or yard, which #building or other structure# was completed prior to September 27, 1962, or constructed in accordance with the applicable provisions of Sections 11-31 to 11-34, inclusive, prior to December 5, 1991, may be #enlarged# or replaced in accordance with the applicable district regulations without any requirement for a special permit from the City Planning Commission. Ownership of rights permitting the #enlargement# or replacement of such a #building or other structure# shall be deemed to be equivalent to ownership of a #zoning lot# or portion thereof, provided that such #enlargement# or replacement will be on one #block# and the rights are in single ownership and recorded prior to February 22, 1990. Such ownership of rights shall be deemed to include alternative arrangements specified in the #zoning lot# definition in Section 12-10 (DEFINITIONS).

#Enlargement# or replacement utilizing these ownership rights shall be deemed to be constructed upon the equivalent of a #zoning lot#.

(b) When the #use# of a railroad or transit right-of-way or yard or portion thereof has been permanently discontinued or terminated and ~~is proposed for #development# as~~ a #large-scale residential development#, ~~or~~ #large scale community facility development# or ~~a #general~~ large-scale general development# requiring one or more special permits is proposed, no use or #development# of the property shall be allowed until the City Planning Commission has authorized the size and configuration of all #zoning lots# on such property ~~as part of such large-scale #development#~~. As a condition for such

authorization, the Commission shall find that:

(1) the proposed #zoning lots#, indicated by a map describing the boundaries of and the total area of each lot, are not excessively large, elongated or irregular in shape and that no #development# on any #zoning lot# would result in the potential for an excessive concentration of #bulk# that would be incompatible with allowable #development# on adjoining property; and

(2) each resulting #zoning lot# has direct access to one or more #streets#.

No subsequent alteration in size or configuration of any #zoning lot# approved by the Commission shall be permitted unless authorized by the Commission. The Commission may prescribe appropriate conditions and safeguards to minimize adverse effects of such #zoning lot# designation on the character of the surrounding area. Such conditions shall be set forth in a written Declaration of Restrictions covering all tracts of land or in separate written Declarations of Restrictions covering parts of such tracts of land and which in the aggregate cover the entire tract of land comprising the #zoning lot# and which is executed and recorded as specified in the definition of #zoning lot# in Section 12-10 (DEFINITIONS).

Prior to granting any #zoning lot# authorization relating to the above mentioned right-of-way or yard, the City Planning Commission shall request the Metropolitan Transportation Authority and the Departments of Transportation of the State of New York and the City of New York to indicate within 30 days whether said agencies have any plan to use such property or portion thereof for a railroad or transit #use#.

22-42
Certification of Certain Community Facility Uses

R1 R2 R3 R4 R5 R6 R7 R8 R9 R10

In all #Residence Districts#, for any nursing homes and health-related facilities or #enlargement#, #extension# or change in #use# thereof ~~not located within a Community District in which special permits are required under Section 74-903 (Designation of Community Districts in which special permits are required for certain community facility uses)~~, the City Planning Commission shall certify to the Department of Buildings, prior to the filing of any plans by the ~~developer~~ applicant for a building permit for ~~of~~ such #use#, that none of the following conditions applies to the Community District within which such #use# or #enlargement#, #extension# or change in such #use# is to be located: ~~findings that are a precondition of designation pursuant to Section 74-903 exist in the Community District within which such #use# is to be located. If the Commission finds to the contrary, it shall initiate designation of a Section 74-903 district.~~

(1) the ratio between the number of beds for such #uses# in existence, under construction or approved toward construction by the appropriate federal or state governmental agency, to the population of the Community District compared to such ratio for other Community Districts shows a relative concentration of facilities covered in this Section in the affected district; or

(2) a scarcity of land for general community purposes exists; or

(3) the incidence of construction of facilities for the last three years warrants review over these facilities because they threaten to disrupt the land use balance in the community.

If the Commission finds that one or more of the conditions set forth in this Section applies to the Community District within which such #use# or #enlargement#, #extension# or change in such #use# is to be located, a special permit pursuant to Section 74-90 shall be required.

* * *

22-43
Detached and Semi-Detached Two-Family Residences

R3-1 R3A R3X R4-1 R4A

In R3A, R3X or R4A Districts, a #detached two-family residence# shall be designed so that at least 75 percent of the #floor area# of one #dwelling unit# is located directly above or directly below the other, and in R3-1 or R4-1 Districts, a #semi-detached two-family residence# shall be designed so that at least 75 percent of the #floor area# of one #dwelling unit# is located directly above or directly below the other.

The City Planning Commission may, upon application, authorize the waiver of these requirements provided that ~~the Commission finds that~~:

(a) the #development# is compatible with the scale and character of the surrounding area; and

(b) the design of:

(1) the ~~#detached building#~~ <u>#two family residence# in the R3A, R3X or R4A District</u> does not give the appearance of a #semi-detached building#; or

(2) the ~~#semi-detached building#~~ <u>#two- family residence# in R3-1 or R4-1 Districts</u> does not give the appearance of an #attached building#; and each #dwelling unit# has a perimeter wall with windows facing a #side yard#.

Applications for authorizations shall be referred to the affected Community Board for a period of at least 30 days for comment. The City Planning Commission shall grant in whole or in part or deny the application within 60 days of the completion of the Community Board review period.

* * *

Article II
Chapter 3
Residential Bulk Regulations ~~for Residential Buildings~~ in Residence Districts

23-00
APPLICABILITY AND GENERAL PURPOSES

23-01
Applicability of This Chapter

The #bulk# regulations of this Chapter apply to any #zoning lot# or portion of a #zoning lot# located in any #Residence District# which contains any #building or other structure#, other than a #community facility building# or ~~a #building# used partly for #community facility use#~~ the #community facility# portion of a #building# used for both #residential and #community facility uses#.~~,~~ ~~on any #zoning lot# or portion of a #zoning lot# located in any #Residence District#, including all new #developments#, #enlargements# and, where so specified, #extensions# or conversions. As used in this Chapter, the term "any #building#" shall therefore not include a #community facility building# or a #building# used partly for #community facility uses#, the #bulk# regulations for which are set forth in Article II, Chapter 4.~~ The #bulk# regulations of Article II, Chapter 4 shall apply to a #zoning lot# containing a #community facility building# or to the #community facility# portion of a #building# used for both #residential and #community facility uses#. In addition, the #bulk# regulations of this Chapter, or of specified Sections thereof, also apply in other provisions of this Resolution where they are incorporated by cross reference.

Existing #buildings or other structures# that do not comply with one or more of the applicable #bulk# regulations are #non-complying buildings or other structures# and are subject to the regulations set forth in Article V, Chapter 4.

Special regulations applying to #large-scale residential developments# or #residential uses# in #large-scale community facility developments# are set forth in Article VII, Chapter 8.

Special regulations applying only in Special Purpose Districts are set forth in Articles VIII, IX, X, XI and XII.

~~Special regulations applying to conversion to #dwelling units# of non-#residential floor area buildings# to #residences# in #buildings#, or portions thereof, erected prior to December 15, 1961, located in Manhattan Community Districts 1, 2, 3, 4, 5 and 6, Brooklyn Community Districts 1, 2, 6 and 8, and Queens Community Districts 1 and 2, are set forth in Article I, Chapter 5.~~

In Manhattan Community Districts 1, 2, 3, 4, 5 and 6, Brooklyn Community Districts 1, 2, 6 and 8, and Queens Community Districts 1 and 2, the #conversion# of non-#residential floor area# to #residences# in #buildings# erected prior to December 15, 1961 or January 1, 1977, as applicable, shall be subject to the provisions of Article 1, Chapter 5 (Residential Conversions within Existing Buildings), unless such #conversions# meet the requirements for #residential developments# of Article II (Residence District Regulations).

Special regulations applying in the #waterfront area# are set forth in Article VI, Chapter 2.

23-011
Quality Housing Program

R5D R6A R6B R7A R7B R7D R7X R8A R8B R8X R9A R9D R9X R10A R10X

(a) In R6A, R6B, R7A, R7B, R7D, R7X, R8A, R8B, R8X, R9A, R9D, R9X, R10A or R10X Districts, any #building or other structure# shall comply with the applicable district #bulk# regulations set forth in this Chapter and any #building# containing #residences# shall also comply with the requirements of Article II, Chapter 8 (Quality Housing

Program). However, the provisions of Article II, Chapter 8 shall not apply to #buildings# #converted# pursuant to Article I, Chapter 5.

In R5D Districts, only certain requirements of Article II, Chapter 8, shall apply as set forth in Section 28-01 (Applicability of this Chapter).

R6 R7 R8 R9 R10

(b) In ~~other R6, R7, R8, R9 or R10 Districts~~ the districts indicated without a letter suffix, the #bulk# regulations applicable to #Quality Housing buildings# may, as an alternative, be applied ~~if the #zoning lot# is~~ to #zoning lots# where #buildings# are #developed# or #enlarged# pursuant to all of the requirements of the Quality Housing Program. Such #buildings# may be subsequently #enlarged# only pursuant to the Quality Housing Program. In these districts, the Quality Housing #bulk# regulations may apply to #developments# or #enlargements# on #zoning lots# with existing #buildings# to remain, if:

(1) the existing #buildings# ~~are non-#residential#~~ contain no #residences# and the entire #zoning lot# will comply with the #floor area ratio# and density standards applicable to #Quality Housing buildings#; or

(2) the existing #buildings# ~~are #residential#~~ contain #residences#, and such #buildings# comply with the maximum base heights and maximum #building# heights listed in the tables in Section 23-633 or Section 35-24 for the applicable district, and the entire #zoning lot# will comply with the #floor area ratio#, #lot coverage#, and density standards applicable to #Quality Housing buildings#.

R6 R7 R8 R9 R10

(c) In the districts indicated without a letter suffix, ~~T~~the optional Quality Housing #bulk# regulations permitted as an alternative pursuant to paragraph (b) of this Section shall not apply to:

(1) Article VII, Chapter 8 (Large Scale Residential Developments);

(2) Special Purpose Districts, except the following:

#Special 125th Street District#;

#Special Downtown Brooklyn District#;

#Special Downtown Jamaica District#;

#Special Grand Concourse Preservation District#;

#Special Limited Commercial District#;

#Special Long Island City Mixed Use District#;

#Special Lower Manhattan District#, as modified in Section 91-05;

#Special Ocean Parkway District#;

#Special Transit Land Use District#; or

#Special Tribeca Mixed Use District#;

(3) #zoning lots# in R6 or R7 Districts within the study areas set forth in this paragraph, (c)(3), and occupied, as of August 14, 1987, by a #single-#, #two-# or three-#family detached# or #semi-detached residence# where 70 percent or more of the aggregate length of the blockfronts in #residential use# on both sides of the

#street# facing each other are occupied by such #residences#. For any ~~#development# or #enlargement#~~ #building# on such #zoning lot#, the #floor area ratio# and density requirements of the underlying district shall apply. On a #narrow street# that intersects with a #wide street#, the 70 percent #residential use# requirement on a #narrow street# shall be measured from a distance of 100 feet from its intersection with a #wide street#.

The study areas are:

* * *

23-012
Lower density growth management areas

For areas designated as #lower density growth management areas# pursuant to Section 12-10 (DEFINITIONS), the underlying district regulations shall apply ~~to all #residential developments# or #enlargements#~~. Such regulations are superseded or supplemented as set forth in the following Sections:

* * *

23-03
Street Tree Planting in Residence Districts

R1 R2 R3 R4 R5 R6 R7 R8 R9 R10

In all districts, as indicated, the following shall provide #street# trees in accordance with Section 26-41 (Street Tree Planting):

(a) #developments#, or #enlargements# that increase the #floor area# on a #zoning lot# by 20 percent or more. However, #street# trees shall not be required for #enlargements# of #single-# or #two-family residences#, except as provided in paragraphs (b) and (c) of this Section;

(b) #enlargements# of #single-# or #two-family residences# by 20 percent or more within the following special purpose districts:

#Special Bay Ridge District#;

#Special Clinton District#;

#Special Downtown Brooklyn District#;

#Special Downtown Jamaica District#;

#Special Grand Concourse District#;

#Special Hillsides Preservation District#;

#Special Long Island City Mixed Use District#;

#Special Ocean Parkway District#;

#Special South Richmond Development District#;

(c) #enlargements#, pursuant to the Quality Housing Program, of #single-# or #two-family residences# by 20 percent or more;

(d) #conversions# of 20 percent or more of the #floor area# of a ~~non-#residential~~ #building# to a #residential use#; or

(e) construction of a detached garage that is 400 square feet or greater.

23-04
Planting Strips in Residence Districts

R1 R2 R3 R4 R5

In the districts indicated, the following shall provide and maintain a planting strip in accordance with Section 26-42:

(a) #developments#, or #enlargements# that increase the #floor area# on a #zoning lot# by 20 percent or more. However, planting strips shall not be required for #enlargements# of #single-# or #two-family residences#, except as provided in paragraph (b) of this Section;

(b) #enlargements# of #single-# or #two-family residences# by 20 percent or more within the following special purpose districts:

#Special Bay Ridge District#;

#Special Downtown Jamaica District#;

#Special Hillsides Preservation District#;

#Special Ocean Parkway District#;

#Special South Richmond Development District#;

(c) #conversions# of 20 percent or more of the #floor area# of a ~~non-#residential~~ #building# to a #residential use#; or

(d) construction of a detached garage that is 400 square feet or greater.

23-10
OPEN SPACE AND FLOOR AREA REGULATIONS

* * *

23-12
Permitted Obstructions in Open Space

R1 R2 R3 R4 R5 R6 R7 R8 R9 R10

In the districts indicated, the following obstructions shall be permitted in any #open space# required on a #zoning lot# ~~or, in any open area provided on a #zoning lot# containing a #Quality Housing building# or a #Quality Housing building segment#, or on a #zoning lot# in any R2X, R3A, R3X, R4A, R4-1 or R5A District~~:

(a) Balconies, unenclosed, subject to the provisions of Section 23-13;

(b) Breezeways;

(c) Driveways, private streets, open #accessory# off-street parking spaces, unenclosed #accessory# bicycle parking spaces or open #accessory# off-street loading berths, provided that the total area occupied by all these items does not exceed the percentages ~~of the total open area or required #open space# on the #zoning lot#,~~ set forth in Section 25-64 (Restrictions on Use of Open Space for Parking);

Driveways, private streets, open #accessory# off-street parking spaces, unenclosed #accessory# bicycle parking spaces or open #accessory# off-street loading berths, provided that the total area

occupied by all these items does not exceed the percent of the total open area or required #open space# on the #zoning lot#, as set forth in Section 25-64 (Restrictions on Use of Open Space for Parking);

(d) Eaves, gutters or downspouts, projecting into such #open space# not more than 16 inches or 20 percent of the width of such #open space#, whichever is the lesser distance;

(e) Parking spaces, off-street, enclosed, #accessory#, not to exceed one space per #dwelling unit#, when #accessory# to a #single-family#, #two-family# or three-#family residence#, provided that the total area occupied by a #building# used for such purposes does not exceed 20 percent of the total required #open space# on the #zoning lot#. However, two such spaces for a #single-family residence# may be permitted in #lower density growth management areas# and in R1-2A Districts;

(f) Swimming pools, #accessory#, above-grade structures limited to a height not exceeding eight feet above the level of the #rear yard# or #rear yard equivalent#;

(g) Terraces, unenclosed, fire escapes, planting boxes or air conditioning units, provided that no such items project more than six feet into or over such #open space#.

However, any such #open space# ~~or open area, or portion thereof~~, that is part of a required #yard#, #rear yard equivalent# or #court# may contain an obstruction listed in this Section only where such obstruction is permitted pursuant to Sections 23-44 (Permitted Obstructions in Required Yards or Rear Yard Equivalents) or 23-87 (Permitted Obstructions in Courts), as applicable.

23-13
Balconies

23-131
Balconies in R1 through R5 Districts

R1 R2 R3 R4 R5

In the districts indicated, balconies that are:

(a) unenclosed except for a parapet not exceeding 3 feet, 8 inches in height, or a railing not less than 50 percent open and not exceeding 4 feet, 6 inches in height; and

(b) located at or above the floor level of the second #story# provided that such balcony is not lower than seven feet above #curb level# or adjacent natural grade, whichever is higher;

may, as permitted in this Section, project into or over any required open area set forth in the following Sections:

(1) #front yards#, as defined in Section 12-10 (DEFINITIONS);

(2) #rear yards# or #rear yard equivalents#, as defined in Section 12-10;

(3) #open space#, as defined in Section 12-10, excluding:

(i) #side yards#, as defined in Section 12-10;

(ii) required minimum dimensions of #courts#, as defined in Section 12-10; and as set forth in Section 23-80 (COURT REGULATIONS AND MINIMUM DISTANCE BETWEEN WINDOWS AND WALLS OR LOT LINES); and

(iii) required distances between #buildings#, as set forth in Section 23-71 (Minimum Distance Between Buildings on a Single Zoning lot).

If the depth of the #front yard# is greater than 12 feet, balconies may project six feet into such #front yard# provided that, in R1, R2 or R3 Districts, the aggregate ~~length~~ width of such balconies does not exceed 50 percent of the ~~length~~ width at that level of the plane surface of the building wall from which they project and, in R4 or R5 Districts, such aggregate ~~length~~ width does not exceed 67 percent.

If the depth of the #front yard# is 12 feet or less, balconies may project to a distance equal to one-half the depth of such #front yard# provided the aggregate ~~length~~ width of such balconies does not exceed 50 percent of the ~~length~~ width at that level of the plane surface of the building wall from which they project.

Balconies may, by a distance not to exceed eight feet, project into a #rear yard# or other #open space# not specifically excluded in paragraphs (2) and (3) of this Section. At the level of the second #story#, the aggregate ~~length~~ width of such balconies is not limited but at the level of the third #story# or higher such aggregate ~~length~~ width shall not exceed 50 percent of the ~~length~~ width at that level of the plane surface of the building wall from which the balconies project.

In addition, balconies may be enclosed by building walls provided that at least 33 percent of the perimeter of such balcony is unenclosed except for a parapet not exceeding 3 feet, 8 inches in height, or a railing not less than 50 percent open and not exceeding 4 feet, 6 inches in height. The portion of a balcony enclosed by building walls shall not exceed six feet in depth.

23-132
Balconies in R6 through R10 Districts

R6 R7 R8 R9 R10

In the districts indicated, balconies may project into or over any required open area within a #publicly accessible open area#, a #rear yard#, an #initial setback distance#, any open areas not occupied by towers, any required side or rear setbacks, or any required #open space#, provided that such balcony:

(a) shall not project by a distance greater than seven feet as measured from the plane surface of the building wall from which it projects;

(b) shall not project into the minimum required distance between #buildings# on the same #zoning lot#;

(c) shall not cover more than ten percent of the area designated as outdoor recreation space pursuant to Section 28-30 (RECREATION SPACE AND PLANTING AREAS);

(d) shall be unenclosed except for a parapet not exceeding 3 feet, 8 inches in height or a railing not less than 50 percent open and not exceeding 4 feet, 6 inches in height. However, such balconies may be recessed into a building wall up to a maximum depth of six feet provided that at least 33 percent of the perimeter of such balcony is unenclosed except for a parapet or railing;

(e) shall be located at or higher than the floor level of the third #story# of a #building# or at least 20 feet above #curb level#, except that for #~~residential~~ buildings# containing #residences# not more than 32 feet in height, such balcony may be located at or higher than the floor level of the second #story# provided that such balcony is located not lower than seven feet above #curb level# or seven feet above natural grade, whichever is higher; and

(f) shall have an aggregate ~~length~~ width, at the level of any #story#, not exceeding 50 percent of the ~~length~~ width at that level of the plane surface of the building wall from which it projects.

23-14
Minimum Required Open Space, Open Space Ratio, Maximum Lot Coverage and Maximum Floor Area Ratio

R1 R2 R3 R4 R5 R6 R7 R8 R9 R10

In all districts, as indicated, except as otherwise provided in Section 23-17 (Special Provisions for Zoning Lots Divided by District Boundaries), for any ~~#building# on a~~ #zoning lot#, the minimum required #open space# or #open space ratio# shall not be less than set forth in this Section, and the maximum #lot coverage# shall not exceed the #lot coverage# as set forth in this Section. Any given #lot area# or area of #open space# shall be counted only once in determining the #floor area ratio#, the amount of #open space# or the #open space ratio#.

~~Any #building#, in~~ In addition to complying with the provisions of this Section, all #zoning lots# shall be subject to the provisions set forth in Section 23-22 (~~Required Lot Area per Dwelling Unit, Lot Area per Room or Floor Area per Room~~ Maximum Number of Dwelling Units or Rooming Units) as well as all other applicable #bulk# regulations as set forth in this Chapter.

23-141
Open space and floor area regulations in Rl, R2, R3, R4 or R5 Districts

R1 R2 R3 R4 R5

Except as otherwise provided in paragraph (a) of Section 23-147 (For non-profit residences for the elderly), in the districts indicated, the minimum required #open space# or #open space ratio#, the maximum #lot coverage# and the maximum #floor area ratio# for any ~~#building# on a~~ #zoning lot# shall be as set forth in the following tables:

(a)

District	Minimum Required #Open Space Ratio#	Maximum #Floor Area Ratio#
R1* R2*	150.0	0.50

* R1-2A, R2A and R2X are subject to the provisions of paragraph (b).

(b)

District	Maximum #Lot Coverage# (in percent)	Minimum Required #Open Space# (in percent)	Maximum #Floor Area Ratio#
R1-2A	30	70	.50
R2A	30	70	.50
R2X	governed by #yard# requirements		.85
R3-1 R3-2	35	65	.50
R3A R3X	governed by #yard# requirements		.50
R4	45	55	.75
R4A R4-1	governed by #yard# requirements		.75
R4B	55	45	.90
R5	55	45	1.25
R5A	governed by #yard# requirements		1.10
R5B	55	45	1.35
R5D	60*	40*	2.00

* For #corner lots#, the maximum #lot coverage# shall be 80 percent and the minimum required #open space# shall be 20 percent.

In addition, the following rules shall apply:

(1) In R2X, R3, R4, R4A and R4-1 Districts, except R3, R4A and R4-1 Districts within #lower density growth management areas#, the #floor area ratio# in the table in this ~~Section~~ paragraph (b) may be increased by up to 20 percent provided that any such increase in #floor area# is located directly under a sloping roof which rises at least three and one half inches in vertical distance for each foot of horizontal distance and the structural headroom of such #floor area# is between five and eight feet.

(2) In R3, R4A and R4-1 Districts in #lower density growth management areas#, the #floor area ratio# in the table in this Section may be increased by up to 20 percent provided that any such increase in #floor area# is located in ~~a~~ any portion of a #building# covered by a sloping roof that rises at least seven inches in vertical distance for each foot of horizontal distance.

(3) In R3, R4 and R5 Districts, the permitted #floor area# of a #single-# or #two-family detached# or #semi-detached residence developed# after June 30, 1989, may be increased by up to 300 square feet if at least one enclosed #accessory# off-street parking space is provided in a garage located, wholly or partly, in the #side lot ribbon# pursuant to Sections 23-12 (Permitted Obstructions in Open Space), paragraph (e), 23-441 (Location of garages in side yards of corner lots) or 23-442 (Location of garages in side yards of other zoning lots).

(4) In R3, R4A and R4-1 Districts within #lower density growth management areas#, and in all R1-2A Districts, the permitted #floor area# of a #single-# or #two-family detached# or #semi-detached residence# may be increased by up to 300 square feet for one parking space and up to 500 square feet for two parking spaces provided such spaces are in a garage located, wholly or partly, in the #side lot ribbon# pursuant to Sections 23-12, paragraph (e), 23-441 or 23-442, except that in R1-2A Districts, such parking spaces need not be located in the #side lot ribbon#.

(5) In R2A Districts, the permitted #floor area# may be increased by up to 300 square feet for a detached garage located in a #rear yard#, except where a parking space is provided within a ~~#residential~~ building# containing #residences#.

(c) The maximum #floor area ratio# and #lot coverage# and the minimum required #open space# for any ~~#building# or #buildings# on a~~ #zoning lot# utilizing the special optional regulations of a #predominantly built-up area# are set forth in the following table:

District	Maximum #Lot Coverage# (in percent)	Minimum Required #Open Space# (in percent)	Maximum #Floor Area Ratio#
R4	55	45	1.35
R5	55	45	1.65

(d) In R3 Districts, except for #zoning lots ~~developed# with~~ containing #single-#, #two-#, or three-#family residences#, 50 percent of the required #open space# on a #zoning lot#, except such #open space# in a #front yard#, shall have a minimum dimension of 12 feet and shall not be used for driveways, private streets, open or enclosed #accessory# off-street parking spaces or open or enclosed #accessory# off-street loading berths.

(e) In R4 and R5 Districts, except for #zoning lots~~ developed# with~~ containing #single-#, #two-# or three-#family residences#, 33 percent of the required #open space# on a #zoning lot#, except such #open space# in a #front yard# or, in R5D Districts, open area between the #street line# and #street wall# of a #building# or its prolongation, shall have a minimum dimension of 12 feet and shall not be used for driveways, private streets, open or enclosed #accessory# off-street parking spaces, or open or enclosed #accessory# off-street loading berths.

23-142
In R6, R7, R8 or R9 Districts

R6 R7 R8 R9

Except as otherwise provided in the following Sections:

Section 23-144 (In designated areas where the Inclusionary Housing Program is applicable)

Section 23-145 (For ~~residential buildings developed or enlarged pursuant to the~~ Quality Housing ~~Program~~ buildings)

Section 23-146 (Optional provisions for certain R5 and R6 Districts in Brooklyn); ~~and~~

Section 23-147 (For non-profit residences for the elderly), and

Section 23-148 (For tower-on-a-base buildings in R9 Districts)

in the districts indicated, the minimum required #open space ratio# and the maximum #floor area ratio# for any ~~#building# on a~~ #zoning lot# shall be as set forth in the following table for ~~#buildings#~~ #zoning lots# with the #height factor# indicated in the table.

MINIMUM REQUIRED OPEN SPACE RATIO
AND MAXIMUM FLOOR AREA RATIO

R6 through R9 Districts

For ~~a #building#~~ #zoning lots# with a #height factor# of	In R6 Districts		In R7 Districts		In R8 Districts		In R9 Districts	
	Min. Req. #open space ratio#	Max. #floor area ratio#	Min. Req. #open space ratio#	Max. #floor area ratio#	Min. Req. #open space ratio#	Max. #floor area ratio#	Min. Req. #open space ratio#	Max. #floor area ratio#
1	27.5	0.78	15.5	0.87	5.9	0.94	1.0	0.99
2	28.0	1.28	16.0	1.52	6.2	1.78	1.4	1.95
3	28.5	1.62	16.5	2.01	6.5	2.51	1.8	2.85
4	29.0	1.85	17.0	2.38	6.8	3.14	2.2	3.68
5	29.5	2.02	17.5	2.67	7.1	3.69	2.6	4.42
6	30.0	2.14	18.0	2.88	7.4	4.15	3.0	5.08
7	30.5	2.23	18.5	3.05	7.7	4.55	3.4	5.65
8	31.0	2.30	19.0	3.17	8.0	4.88	3.8	6.13

9	31.5	2.35	19.5	3.27	8.3	5.15	4.2	6.54
10	32.0	2.38	20.0	3.33	8.6	5.38	4.6	6.85
11	32.5	2.40	20.5	3.38	8.9	5.56	5.0	7.09
12	33.0	2.42	21.0	3.41	9.2	5.71	5.4	7.30
13	33.5	2.43	21.5	3.42	9.5	5.81	5.8	7.41
14	34.0	2.43	22.0	3.44	9.8	5.92	6.2	7.52
15	34.5	2.43	22.5	3.42	10.1	5.95	6.6	7.52
16	35.0	2.42	23.0	3.41	10.4	5.99	7.0	7.52
17	35.5	2.42	23.5	3.40	10.7	6.02	7.4	7.52
18	36.0	2.40	24.0	3.38	11.0	6.02	7.8	7.46
19	36.5	2.39	24.5	3.36	11.3	6.02	8.2	7.41
20	37.0	2.38	25.0	3.33	11.6	6.02	8.6	7.35
21	37.5	2.36	25.5	3.30	11.9	5.99	9.0	7.25

23-143
For high buildings in R6, R7, R8 or R9 Districts

R6 R7 R8 R9

Except as otherwise provided in paragraph (a) of Section 23-147 (For non-profit residences for the elderly), in the districts indicated, for #~~buildings~~ zoning lots# with #height factors# greater than 21, the minimum required #open space ratio# shall be as set forth in the following table:

OPEN SPACE RATIO FOR HIGH BUILDINGS

District	Minimum Required #Open Space Ratio# at #Height Factor# of 21	Additional Required #Open Space Ratio# for each Additional #Height Factor#
R6	37.5	0.5
R7	25.5	0.5
R8	11.9	0.3
R9	9.0	0.4

For such #~~buildings~~ zoning lots#, the maximum #floor area ratio# shall be such as can be attained at the required #open space ratio# for the #height factor#.*

* The #floor area ratio# attainable at a given #height factor# and a given #open space ratio# may be computed from the following formula:

$$\frac{1}{\text{F.A.R.}} = \frac{\text{O.S.R.}}{100} + \frac{1}{\text{H.F.}}$$

* * *

23-145
For ~~residential buildings developed or enlarged pursuant to the~~ Quality Housing buildings ~~Program~~

R6 R7 R8 R9 R10

In the districts indicated, the maximum #residential lot coverage# and the maximum #floor area ratio# for ~~any #residential building# on~~ a #zoning lot where #Quality Housing buildings# are developed# or #enlarged# ~~pursuant to the Quality Housing Program~~ shall be as set forth in the following table. ~~and t~~The maximums for ~~#developments#, or #enlargements# where permitted,~~ #zoning lots# or portions thereof located within 100 feet of a #wide street# in R6, R7 or R8 Districts without a letter suffix outside the #Manhattan Core#, shall be as designated by the same district with an asterisk. In an R6 District inside the #Manhattan Core# located within 100 feet of a #wide street#, the maximums shall be indicated by the same district with a double asterisk.

MAXIMUM LOT COVERAGE AND FLOOR AREA RATIO
FOR
QUALITY HOUSING BUILDINGS
(in percent)

	Maximum #Lot Coverage#		
District	#Corner Lot#	#Interior Lot# or #Through Lot#	Maximum #Floor Area Ratio#
R6	80	60	2.20
R6**	80	60	2.43
R6* R6A R7B	80	65	3.00
R6B	80	60	2.00
R7	80	65	3.44
R7* R7A	80	65	4.00
R7D	80	65	4.20
R7X	80	70	5.00
R8 R8A R8X	80	70	6.02
R8*	80	70	7.20
R8B	80	70	4.00
R9 R9A	80	70	7.52
R9D R9X	80	70	9.00
R10	100	70	10.00

~~In Community District 6 in the Borough of Brooklyn, the following #streets# shall be considered #narrow streets# for the purposes of applying #floor area# and open space regulations: Second, Carroll and President Streets, between Smith and Hoyt Streets; First Place, Second Place, Third Place and Fourth Place.~~

23-146
Optional provisions for certain R5 and R6 Districts in Brooklyn

R5 R6

Within the area bounded by 39th Street, Dahill Road, Ditmas Avenue, McDonald Avenue, Bay Parkway, 61st Street and Fort Hamilton Parkway in Community Board 12, in the Borough of Brooklyn, special optional regulations as set forth in this Section are applicable for ~~a~~ #zoning lots# containing ~~#development# or #enlargement# involving a~~ #buildings# used exclusively as ~~a~~ one-, #two-# or three-#family residences#, provided such ~~#development# or #enlargement#~~ #zoning lot# complies with all of the provisions of this Section. Except as modified by the express provisions of this Section, the regulations of R5 and R6 Districts remain in effect.

(a) Floor area, lot coverage, open space, density and height factor regulations

The regulations of Article II, Chapter 3, relating to #floor area ratio#, #open space#, density and #height factor# are hereby made inapplicable. In lieu thereof, the maximum #floor area ratio# for a #corner lot# shall not exceed 1.65 and the maximum #floor area ratio# for an #interior# or #through lot# shall not exceed 1.8 in R5 Districts and 1.95 in R6 Districts. Notwithstanding the definition of #floor area# in Section 12-10, the lowest #story# ~~of a #residential building#~~ shall be included in the definition of #floor area#, and floor space used for #accessory# off-street parking spaces shall be included in the definition of #floor area# unless such spaces are located in a #cellar#. The #lot coverage# ~~of #buildings#~~ for a #corner lot# shall not exceed 55 percent and the #lot coverage# for an #interior# or #through lot# shall not exceed 60 percent in R5 Districts and 65 percent in R6 Districts.

(b) Building height

No ~~#residential~~ building# shall exceed a height of 35 feet above #curb level#, or three #stories#, whichever is less. The regulations of Article II, Chapter 3, relating to height and setback, are hereby made inapplicable.

(c) Front yards

In R5 Districts, the following #front yard# regulations are applicable. A #front yard# shall be provided with a depth of not less than five feet, provided that for #corner lots#, one #front yard# with a depth of not less than 10 feet is required. If the depth of the #front yard# exceeds 10 feet, such #front yard# shall have a depth of not less than 18 feet. In R6 Districts, a #front yard# is not required.

(d) Side yards

In R5 Districts, the following #side yard# regulations shall apply:

(1) Where an existing #building# on an adjacent #zoning lot# is located on the common #side lot line#, no #side yard# is required. However, if an open area extending along such common #side lot line# is provided, it shall be at least eight feet wide.

(2) Where an existing #building# on an adjacent #zoning lot# is located less than eight feet from, but not on, the common #side lot line#, a #side yard# at least four feet wide is required. However, in no case shall the distance between a new or #enlarged building# and an existing #building# across a common #side lot line# on an adjacent #zoning lot# be less than eight feet.

(3) Where an adjacent #zoning lot# is vacant or where an existing #building# on an adjacent #zoning lot# is located more than eight feet from the common #side lot line#, a #side yard# at least four feet wide is required.

(4) In R6 Districts, a #side yard# is not required. However, when a #building# is 62 feet in depth or more, an eight foot #side yard# or an #outer court# as set forth in paragraph (f) of this Section is required.

(5) Notwithstanding the provisions of paragraphs (d)(1) and (d)(3), #detached# one-, #two-# and three-#family residences# on #corner lots# shall provide #side yards# of five feet and 20 feet. #Semi-detached# one-, #two-# and three-#family residences# on #corner lots# shall provide one #side yard# of 20 feet.

(e) Rear yards

#Single-# or #two-family residences# consisting of #detached#~~,~~ #semi-detached# or #zero lot line buildings# may project up to ten feet into a required #rear yard# or #rear yard equivalent#, provided that there is a #side yard# of at least eight feet for such #semi-detached# or #zero lot line buildings# and that the total width of #side yards# for a #detached building# is at least eight feet. ~~In addition, such #rear yard# projection shall not be permitted for #semi-detached buildings# that constitute the end #building# of a row of #attached buildings#.~~

(f) Outer court and minimum distance between legally required windows and walls or lot lines

In R6 Districts, the #outer court# provisions of Section 23-84 are modified as follows: an #outer court# shall have a minimum width of 10 feet and a depth of not more than twice the width.

Where a ~~#residential development# or #enlargement#~~#building# is attached, along a common #side lot line#, to a portion of an existing or new ~~#residential~~ building# on an adjacent #zoning lot#, there may be a joint #outer court# across such common #side lot line# with a minimum width of 10 feet. The requirements of Section 23-86 are hereby made inapplicable.

(g) Off-street parking in R5 and R6 Districts

No #accessory# off-street parking is required in R5 and R6 Districts.

23-147
For non-profit residences for the elderly

R3 R4 R5 R6 R7

(a) In the districts indicated, except R5D Districts, the minimum required #open space ratio# and the maximum #floor area ratio# for #non-profit residences for the elderly# shall be as set forth in the following table:

Maximum #Floor Area Ratio#	Minimum #Open Space Ratio#	Districts
0.95	66.5	R3
1.29	39.4	R4
1.95	23.1	R5

3.90	17.7	R6
5.01	12.8	R7

In R5D Districts, the #open space# and #floor area# regulations set forth in Section 23-141 shall apply to #non-profit residences for the elderly#.

However, in R6 or R7 Districts, the minimum required #open space ratio# shall not apply to #non-profit residences for the elderly# ~~developed#, or #enlarged# where permitted, pursuant to the~~ that are #Quality Housing buildings# ~~Program~~. Such ~~#developments# or #enlargements#~~ #buildings# shall be subject to the requirements of R6A or R7A Districts, respectively, as set forth in paragraph (b) of this Section.

R6A R6B R7A R7B R7D R7X

(b) In the districts indicated, the maximum #lot coverage# and the maximum #floor area ratio# for #non-profit residences for the elderly# shall be as set forth in the following table:

MAXIMUM LOT COVERAGE AND FLOOR AREA RATIO
FOR
NON-PROFIT RESIDENCES FOR THE ELDERLY
(in percent)

Maximum #Lot Coverage#			
#Corner Lot#	#Interior Lot# or #Through Lot#	Maximum #Floor Area Ratio#	District
80	65	3.90	R6A R7B
80	60	2.00	R6B
80	70	5.01	R7A R7D R7X

23-148
For tower-on-a-base buildings in R9 Districts

In R9 Districts, for #zoning lots# where #buildings# are #developed# or #enlarged# pursuant to the tower-on-a-base provisions of Section 23-651, the maximum #floor area ratio# shall be 7.52, and the maximum #lot coverage# shall be 80 percent on a #corner lot# and 70 percent on an #interior lot#.

23-15
Maximum Floor Area Ratio in R10 Districts

R10

In the district indicated, except in #Inclusionary Housing designated areas#, the #floor area ratio# ~~for any #building#~~ on a #zoning lot# shall not exceed 10.0, except as provided in Section 23-17 (Special Provisions for Zoning Lots Divided By District Boundaries) and Section 23-90 (INCLUSIONARY HOUSING), inclusive.

Notwithstanding any other provision of this Resolution, the maximum #floor area ratio# shall not exceed 12.0. However, within the boundaries of Community District 7 in the Borough of Manhattan, ~~all #developments# or #enlargements#~~ in R10 Districts, except R10A or R10X

Districts, ~~shall be limited to a~~ the maximum #floor area ratio# ~~of~~ shall be 10.0.

* * *

23-17
Special Provisions for Zoning Lots Divided by District Boundaries or Subject to Different Bulk Regulations

R1 R2 R3 R4 R5 R6 R7 R8 R9 R10

In all districts, as indicated, whenever a #zoning lot# is divided by a boundary between districts or is subject to #bulk# regulations resulting in different minimum required #open space ratios#, different maximum #floor area ratios#, different #lot coverages#, ~~or #open space ratios# and #lot coverages#,~~ on portions of the #zoning lot#, the provisions set forth in Article VII, Chapter 7, shall apply.

23-20
DENSITY REGULATIONS

23-21
Required Floor Area per Dwelling Unit or Floor Area per Rooming Unit

R1 R2 R3 R4 R5 R6 R7 R8 R9 R10

This Section shall apply to existing #buildings# in which the number of #rooming units# or #dwelling units# is increased ~~all conversions, #extensions# or #enlargements# of existing #buildings# that increase the number of #dwelling units# or #rooming units#,~~ as well as to all ~~new~~ #development#.

Any given #floor area# shall be counted only once in meeting the #floor area# requirements.

In all districts, as indicated, the #floor area# requirement per #dwelling unit# or #rooming unit# shall not be less than as set forth in this Section, except as provided in Sections 23-24 (Special Provisions for Buildings Used Partly for Non-Residential Uses) or Section 23-25 (Special Provisions for Existing Small Zoning Lots).

23-22
Maximum Number of Dwelling Units or Rooming Units

R1 R2 R3 R4 R5 R6 R7 R8 R9 R10

In all districts, as indicated, the maximum number of #dwelling units# or #rooming units# shall equal the maximum #residential floor area# permitted on the #zoning lot# divided by the applicable factor in the following table. In R1 through R5 Districts, no #rooming units# shall be permitted and any #dwelling unit# shall be occupied by only one #family#. Fractions equal to or greater than three-quarters resulting from this calculation shall be considered to be one #dwelling unit# or #rooming unit#.

For the purposes of this Section, where a #floor area ratio# is determined pursuant to Sections 23-142 or 23-143, notwithstanding the #height factor# of the #~~building~~ zoning lot#, the maximum #residential floor area ratio# shall be 2.43 in an R6 District within 100 feet of a #wide street#, 3.44 in an R7 District, and 6.02 in an R8 District. In an R6 District beyond 100 feet of a #wide street#, the maximum #residential floor area ratio# shall be as specified in Sections 23-142 or 23-143, or 2.2, whichever is greater.

~~In Community District 6 in the Borough of Brooklyn, the following #streets# shall be considered #narrow streets# for the purposes of applying density regulations: Second, Carroll and President Streets, between Smith and Hoyt Streets; First Place, Second Place, Third Place and Fourth Place.~~

* * *

23-23
Minimum Size of Dwelling Units

R3 R4 R5

(a) In the districts indicated, for all #buildings# other than #non-profit residences for the elderly# ~~in R3, R4 and R5 Districts~~, each #dwelling unit# shall contain at least 300 square feet of #floor area#.

R3 R4A R4-1

(b) In the districts indicated, for all two-family #detached# and, where permitted, two-family #semi-detached# and #zero lot line buildings# ~~in R3, R4A and R4-1 Districts~~, one #dwelling unit# shall contain at least 925 square feet.

* * *

23-26
Special Provisions for Zoning Lots Divided by District Boundaries

R1 R2 R3 R4 R5 R6 R7 R8 R9 R10

In all districts, as indicated, whenever a #zoning lot# is divided by a boundary between districts or is subject to other regulations resulting in different requirements for density ~~or for #lot area# for permitted non-#residential uses# on portions of the #zoning lot#~~, the provisions set forth in Article VII, Chapter 7, shall apply.

23-30
LOT AREA AND LOT WIDTH REGULATIONS

Definitions and General Provisions

23-31
Definitions

Words in italics are defined in Section 12-10 (DEFINITIONS) or, if applicable exclusively to this Section, in this Section.

* * *

Regulations Applying in Special Situations

23-33
Special Provisions for <u>Development of</u> Existing Small Lots

R1 R2 R3 R4 R5 R6 R7 R8 R9 R10

In all districts, as indicated, either one #single-family detached residence# or, where permitted, one #single-# or #two-family residence# may be ~~built~~ <u>#developed#</u> upon a #zoning lot# ~~consisting entirely of a tract of land~~ that:

(a) has less than the prescribed minimum #lot area# or #lot width# or, in #lower density growth management areas# in the Borough of Staten Island, does not comply with the provisions of Section 23-32 (Minimum Lot Area or Lot Width for Residences);

(b) was owned separately and individually from all other adjoining tracts of land, both on December 15, 1961, and on the date of application for a building permit or, in R2X, R3A, R3X or R4A Districts, both on the effective date of establishing such district on the

#zoning maps# and on the date of application for a building permit or, in #lower density growth management areas#, both on December 8, 2005, and on the date of application for a building permit; and

(c) if #developed# as a #two-family residence#, meets the applicable density requirement of the zoning district in which such #zoning lot# is located.

* * *

23-40
YARD REGULATIONS

Definitions and General Provisions

23-41
Definitions

Words in italics are defined in Section 12-10 (DEFINITIONS) or, if applicable exclusively to this Section, in this Section.

* * *

23-44
Permitted Obstructions in Required Yards or Rear Yard Equivalents

In all #Residence Districts#, the following obstructions shall be permitted within a required #yard# or #rear yard equivalent#:

(a) In any #yard# or #rear yard equivalent#:

Arbors or trellises;

Awnings or canopies;

Balconies, unenclosed, of a #~~residential~~ building# containing #residences# subject to the applicable provisions of Section 23-13. Such balconies are not permitted in required #side yards#;

Chimneys, projecting not more than three feet into, and not exceeding two percent of the area of, the required #yard# or #rear yard equivalent#;

Eaves, gutters or downspouts projecting into such #yard# or #rear yard equivalent# not more than 16 inches or 20 percent of the width of such #yard# or #rear yard equivalent#, whichever is the lesser distance;

Fences, not exceeding four feet in height above adjoining grade in any #front yard#, except that for #corner lots#, a fence may be up to six feet in height within that portion of one #front yard# that is between a #side lot line# and the prolongation of the side wall of the #residence# facing such #side lot line#;

Fire escapes, projecting into a #front yard#, only in such cases where the fire escape is required for the #conversion# of a #building# in existence before December 15, 1961;

Flagpoles;

~~Overhangs in~~ Overhanging portions of a #building# in R4 and R5 Districts, except R4A, R4-1, R4B, R5A, R5B or R5D Districts, which are ~~that portion of a #building#~~ above the first #story# including the #basement# and which project~~s~~ not more than three feet into the required 18 foot #front yard#. In no case shall the lowest level of the projected portion be less than seven feet above the level of the #front yard# at the face of the #building#. Supports for the projected portion of any #building# are permitted

obstructions within the required #front yard#, provided that the total area occupied by such supports does not exceed 15 percent of the area underneath the projected portion. No support may extend beyond the three-foot projection;

Parking spaces for automobiles or bicycles, off-street, open, #accessory#, within a #side# or #rear yard#;

Parking spaces, off-street, open, within a #front yard#, that are #accessory# to a #building# containing #residences# provided that:

(1) in R1, R2, R3A, R3X, R3-1, R4A, R4-1 and R5A Districts, except in #lower density growth management areas#, such spaces meet all the requirements of paragraph (a) of Section 25-621 (Location of parking spaces in certain districts);

(2) in R3-2, R4 other than R4A, R4-1 and R4B Districts, and R5 Districts other than R5A, R5B and R5D Districts, such spaces meet all the requirements of paragraph (b) of Section 25-621 (Location of parking spaces in certain districts);

(3) in #lower density growth management areas#, such spaces are non-required and are located in a driveway that accesses parking spaces that are located behind the #street wall# of the #building# or prolongation thereof.

However, no parking spaces of any kind shall be permitted in any #front yard# in an R4B, R5B or R5D District. Furthermore, no parking spaces of any kind shall be permitted in any #front yard# on a #zoning lot# containing an #attached building# or #semi-detached building# in an R1, R2, R3A, R3X, R4A or R5A District, or in any #front yard# on a #zoning lot# containing an #attached building# ~~or a #semi-detached building# #abutting# an #attached building#~~ in an R3-1 or R4-1 District.

Ramps for ~~access by the handicapped~~ persons with physical disabilities;

Steps, provided that such steps access only the lowest #story# or #cellar# of a #building# fronting on a #street#, which may include a #story# located directly above a #basement#;

Swimming pools, #accessory#, above-grade structures limited to a height not exceeding eight feet above the level of the #rear yard# or #rear yard equivalent#. #Accessory# swimming pools are not permitted obstructions in any #front yard#;

Terraces or porches, open;

Walls, not exceeding eight feet in height above adjoining grade and not roofed or part of a #building#, and not exceeding four feet in height in any #front yard#, except that for #corner lots#, a wall may be up to six feet in height within that portion of one #front yard# that is between a #side lot line# and the prolongation of the side wall of the #residence# facing such #side lot line#.

(b) In any #rear yard# or #rear yard equivalent#:

* * *

Parking spaces, off-street, #accessory#, for automobiles or bicycles, provided that:

(1) if #accessory# to a #single-# or #two-family residence#, the height of a #building# ~~used for such purposes,~~ containing such parking spaces ~~if #accessory# to a #single-# or #two-family residence#,~~ shall not exceed one #story# and such #building# shall be #detached# from such #residence#, and furthermore, if located in an R1 District, such #building# may not be nearer than five feet to a #rear lot line# or #side lot line#. In R2A Districts, detached garages shall be included in #lot coverage#;

(2) if #accessory# to any other kind of ~~#residential~~ building# containing #residences#,

the height of a #building#, or portion thereof, containing such parking spaces within the #rear yard# ~~such #accessory building#, including the apex of a pitched roof,~~ shall not exceed ten feet above adjoining grade, including the apex of a pitched roof in R3, R4 or R5 Districts, or fourteen feet above #curb level# or #base plane#, as applicable, in R6, R7, R8, R9 or R10 Districts;

(3) enclosed #accessory# parking spaces for bicycles shall be #accessory# to a #residence# other than a #single-# or #two-family residence#, attached to a #building#, and the area dedicated to such spaces shall not exceed the area of bicycle parking spaces permitted to be excluded from #floor area# pursuant to Section 25-85 (Floor Area Exemption).

* * *

23-441
Location of garages in side yards of corner lots

In all #Residence Districts#, on #corner lots#, enclosed #accessory# off-street parking spaces shall ~~not~~ be considered permitted obstructions in any portion of a #side yard# which is within 30 feet of both #side lot lines#, provided that, in an R1 or R2A District, on a #corner lot# whose mean width is 45 feet or more, no structure used for such purposes shall be less than five feet from any #side lot line#. In R2A Districts, detached garages shall be included in #lot coverage#.

23-442
Location of garages in side yards of other zoning lots

In all #Residence Districts#, on #zoning lots# other than #corner lots#, where no #rear yard# is required under the provisions of Sections 23-541 (Within one hundred feet of corners) or 23-542 (Along short dimension of block), enclosed #accessory# off-street parking spaces shall ~~not~~ be considered permitted obstructions in any portion of a #side yard# that is within 30 feet of the #rear lot line#.

Basic Regulations - Front Yards

23-45
Minimum Required Front Yards

R1 R2 R3 R4 R5

(a) In the districts indicated, #front yards# shall be provided as set forth in the following table, except that for a #corner lot# in an R1-2 District, one #front yard# may have a depth of 15 feet and, for a #corner lot# in an R3 District, one #front yard# may have a depth of 10 feet.

Front Yard	District
20 feet	R1
20 feet*	R1-2A
15 feet	R2 R2X R3-1 R3-2
15 feet*	R2A
10 feet*	R3A R3X R4-1 R4A R5A
10 feet**	R4 R5

5 feet* R4B R5B R5D

_____

* Except as provided in paragraphs (b) and (c) of this Section.

** If the depth of a #front yard# exceeds 10 feet, the depth of the #front yard# shall be at least 18 feet. ~~or the #zoning lot# is #developed#~~ Furthermore, #developments# or #enlargements# pursuant to the optional regulations applicable in a #predominantly built-up area# shall provide a #front yard# with a depth of at least 18 feet. ~~, the depth of a #front yard# shall be at least 18 feet~~. However, on a #corner lot#, if one #front yard# has a depth of at least 18 feet, the other #front yard# shall have a depth of at least 10 feet.

Furthermore, if an opening to an #accessory# off-street parking space is located within the #street wall# of a ~~#residential~~ building# containing #residences#, there shall be an open area between the opening and the #street line# which is at least 8 and 1/2 feet in width by 18 feet in depth, except this provision shall not apply in R5D Districts.

R2A R3A R3X R4-1 R4A R4B R5A R5B R5D

(b) For the purpose of paragraphs (b) and (c) the area between the #street line# and the front building wall of adjacent #buildings# on the same or adjoining #zoning lots# shall be considered adjacent #front yards#.

Except as provided in paragraph (c) of this Section, in the districts indicated, if adjacent ~~#residential~~ buildings# containing #residences# on the same or on adjoining #zoning lots# fronting on the same #street# have #front yards# greater than the minimum set forth in paragraph (a) of this Section, then a #front yard# shall be provided which:

(1) in R1-2A, R2A, R3A, R3X, R4A, R4-1 or R5A Districts is at least as deep as an adjacent #front yard#; and

(2) in R4B, R5B or R5D Districts is no deeper than the deepest adjacent #front yard# and no shallower than the shallowest adjacent #front yard#.

However, a #front yard# need not exceed 20 feet in depth, except that in R1-2A Districts, a #front yard# need not exceed 25 feet in depth.

In determining the depth of the adjacent #front yards#, balconies, and projections from the front building wall that do not exceed 33 percent of the ~~aggregate~~ width of the #building#, shall be disregarded.

For ~~new~~ #developments# or #enlargements#, projections into the required #front yard# are permitted provided that the ~~aggregate~~ width of all projections at the level of any #story# does not exceed 33 percent of the ~~aggregate~~ width of the #building#.

The depth of such projections shall not exceed three feet into the #front yard#. However, balconies shall be subject to the provisions of Sections 23-13 (Balconies) and 23-44 (Permitted Obstructions in Required Yards or Rear Yard Equivalents).

* * *

Basic Regulations - Side Yards

23-46
Minimum Required Side Yards

R1 R2 R3 R4 R5 R6 R7 R8 R9 R10

In all districts, as indicated, #side yards# shall be provided on any #zoning lot# as specified in

this Section, except as otherwise provided in the following Sections:

Section 23-48 (Special Provisions for Existing Narrow Zoning Lots)

Section 23-49 (Special Provisions for ~~Party or~~ Side Lot Line Walls)

Section 23-50 (EXCEPTIONS FOR SUBDIVISION OF ZONING LOTS AFTER DEVELOPMENT)

Section 23-51 (Special Provisions Applying Adjacent to R1 through R6B Districts)

23-461
Side yards for single- or two-family residences

R1 R2 R3 R4 R5 R6 R7 R8 R9 R10

(a) #Detached# and #zero lot line buildings#

In all districts, as indicated, for #zoning lots# containing only #single-family detached residences# or, where permitted, for #two-family detached residences# or #single-# or #two-family residences# in #zero lot line buildings# or any combination thereof, #side yards# shall be provided as set forth in the table in this paragraph, except that on #corner lots# in R1, R2, R3, R4 and R5 Districts, one #side yard# shall be at least 20 feet in width:

MINIMUM REQUIRED SIDE YARDS

Number Required	Required Total Width (in feet)	Required Minimum Width of any #Side Yard# (in feet)	District
2	35	15	R1-1
2	20	8	R1-2 R1-2A
2	13	5	R2 R2A R3-1 R3-2 R4-R10
2	10*	2*	R2X R3X R4A R5A
1	8*	0*	R3A R4-1 R4B R5B R5D

* Additional regulations apply pursuant to paragraph (c) of this Section. ~~An open area with a minimum width of eight feet, parallel to the #side lot line#, is required along a common #side lot line# between a new #development#, #enlargement# or alteration and a #residential building# on an adjacent #zoning lot#, except that the total width of #side yards# on a #zoning lot# need not exceed 13 feet, with one #side yard# at least five feet wide.~~

~~However, where an adjacent #zoning lot# has an existing #detached residence# with #side yards# totaling at least 13 feet in width with one #side yard# at least five feet wide, or an existing #semi-detached residence# with a #side yard# at least eight feet wide, the open area between #building# on an adjacent #zoning~~

~~lots# shall have a minimum width of ten feet with both #side yards# at least five feet wide.~~

~~Only chimneys, eaves, gutters, downspouts, steps, and ramps for access by the handicapped shall be permitted obstructions in such open area and such obstructions may not reduce the minimum width of the open area by more than three feet. Open #accessory# off-street parking spaces shall be permitted in such open area.~~

R3-1 R3-2 R4 R4-1 R4B R5

(b) #Semi-detached buildings#

In the districts indicated, for #zoning lots# containing only #single-# or #two-family semi-detached residences#, a #side yard# shall be provided as set forth in the table in this paragraph, except that on #corner lots#, one #side yard# shall be at least 20 feet in width:

MINIMUM REQUIRED SIDE YARD

Feet	District
8	R3-1 R3-2 R4 R5
4*	R4-1 R4B R5B R5D

* Additional regulations apply pursuant to paragraph (c) of this Section. ~~An open area with a minimum width of eight feet parallel to the #side lot line#, is required along a common #side lot line# between a #building# on an adjacent #zoning lot#.~~

~~However, where an adjacent #zoning lot# has an existing #detached residence# with #side yards# totaling at least 13 feet in width with one #side yard# at least five feet wide, or an existing #semi-detached residence# with a #side yard# at least eight feet wide, the open area between a # building# on an adjacent #zoning lot# shall have a minimum width of ten feet.~~

~~Only chimneys, eaves, gutters, downspouts, steps, and ramps for access by the handicapped shall be permitted obstructions in such open area and such obstructions may not reduce the minimum width of the open area by more than three feet. Open #accessory# off-street parking spaces shall be permitted in such open area.~~

(c) Additional regulations

(1) Eight foot open area required between #buildings# containing #residences#

An open area with a minimum total width of eight feet, is required between #buildings# containing #residences# on adjacent #zoning lots#. Such open area must be parallel to the #side lot line# and may be located on either one or both sides of such common #side lot line#. (See Figure A)

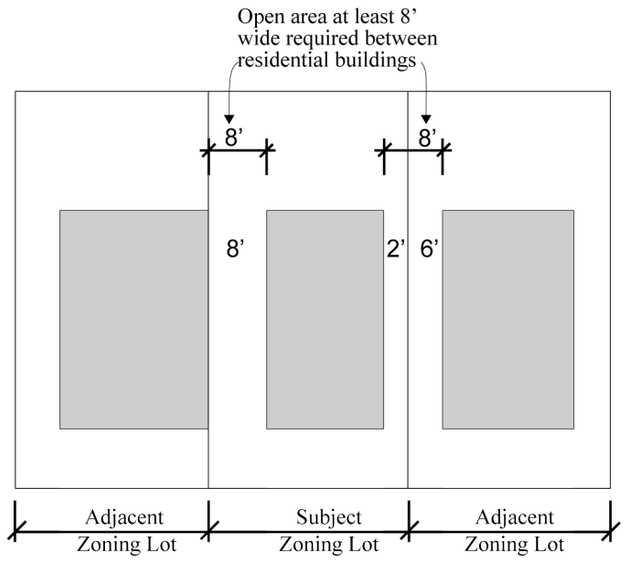

FIGURE A

(2) When #side yards# total more than 13 feet

However, where such open area requirements result in #side yards# totaling more than 13 feet on the subject #zoning lot#, the width of such #side yard# may be reduced to not less than five feet, provided that the total width of both #side yards# on the subject #zoning lot# is at least 13 feet. (See Figure B)

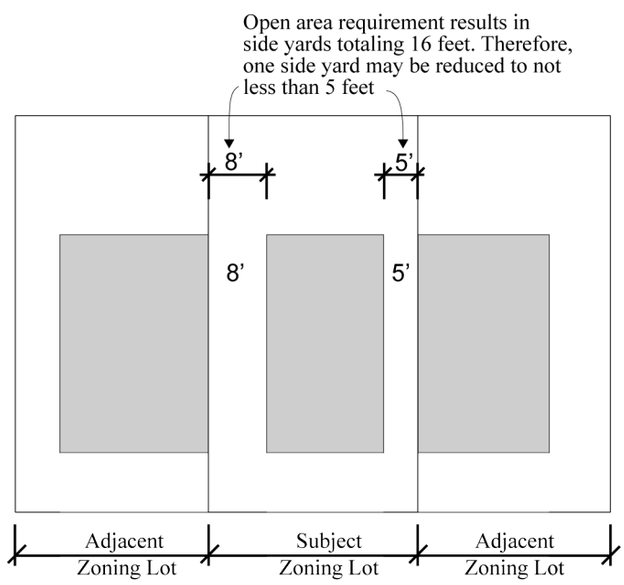

FIGURE B

(3) Permitted obstructions in open areas between buildings

Only chimneys, eaves, gutters, downspouts, steps, and ramps for access by the handicapped shall be permitted obstructions in open areas required pursuant to paragraphs (1) and (2), and such obstructions may not reduce the minimum width of the open area by more than three feet. Open #accessory# off-street parking spaces shall be permitted in such open areas.

(4) Minimum #side yard# requirements for #zoning lots# adjacent to certain #side yards#

A #side yard# at least five feet wide shall be provided on any #zoning lot# along the common #side lot line# of any adjacent #zoning lot# with an existing #detached residence# whose #side yards# total at least 13 feet in width, with both #side yards# on such adjacent #zoning lot# at least five feet in width, or with an existing #semi-detached residence# with a #side yard# at least eight feet in width. (See Figure C)

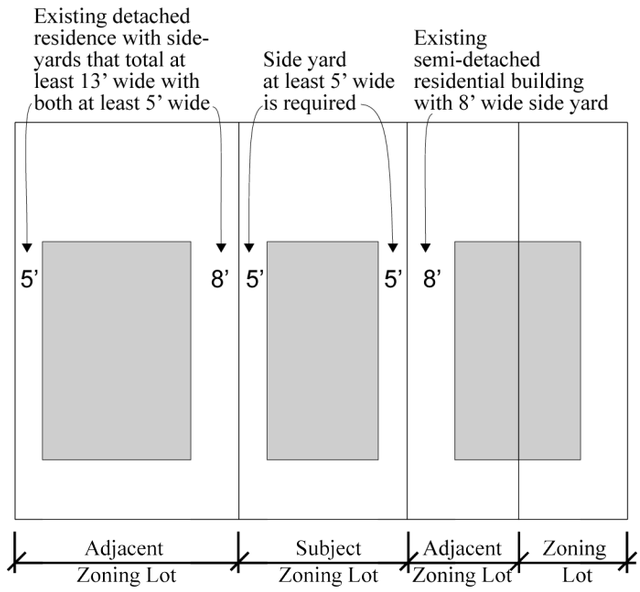

FIGURE C

23-462
Side yards for all other ~~residential~~ buildings~~-~~containing residences
R3-2 R4 R5 R6 R7 R8 R9 R10

In the districts indicated, except as set forth in Section 23-461 (Side yards for single- or two-family residences) or Section 23-49 (Special Provisions for Side Lot Line Walls), ~~for all other #residential buildings#~~ #side yards# shall be provided for all #zoning lots# with #buildings# containing #residences# as follows:

R3-2 R4 R5

(a) In the districts indicated, except R4B, R5B or R5D Districts, two #side yards#, each with a minimum required width of eight feet, shall be provided. However, if ~~a #detached residential building# has an~~ the #aggregate width of street walls# of a #residential building# ~~of~~ is more than 80 feet, or for #abutting buildings#, if the combined #aggregate width of street walls# of all such #abutting buildings# on a #zoning lot is more than 80 feet, then two #side yards# shall be provided, each equal to not less than 10 percent of such #aggregate width of street walls#. For #zoning lots# where no such ~~For~~ ~~#residential~~ buildings# ~~not exceeding~~ exceed a height of two #stories# and a #basement# ~~in height~~, ~~no such~~ #side yards# need not exceed 15 feet in width ~~be more than 15 feet wide~~.

However, on all #corner lots# in #lower density growth management areas#, one #side yard# shall be at least 20 feet in width.

R4B R5B R5D

(b) In the districts indicated, no #side yards# are required; however, where a ~~#residential~~ building# containing #residences# on an adjacent #zoning lot# has a #side yard#, an open area with a minimum width of eight feet and parallel to the #side lot line# is required along the common #side lot line# between ~~the new #development#, #enlargement# or alteration and the~~ such ~~#residential~~ buildings# ~~on the adjacent #zoning lot#.~~

R6 R7 R8 R9 R10

(c) In the districts indicated, no #side yards# are required. However, if any open area extending along a #side lot line# is provided at any level, it shall measure at least eight feet wide for the entire length of the #side lot line#.

23-463
Maximum aggregate width of street walls

R3-2 R4 R5

In the districts indicated, except R4B, R5B or R5D Districts, the #aggregate width of street walls# of a ~~#residential~~ building# containing #residences#, or ~~a number of~~ ~~#residential~~ for #abutting buildings#, the combined #aggregate width of street walls# of all such #abutting buildings# on a #zoning lot# ~~separated by party walls,~~ shall not exceed the ~~length~~ width set forth in the following table:

MAXIMUM
AGGREGATE WIDTH OF STREET WALLS

Feet	District
125	R3-2
185	R4 R5

However, the City Planning Commission may authorize, in R4 and R5 Districts, #aggregate width of street walls# in excess of 185 feet provided the Commission finds that:

(1) the #street wall# ~~of the #development#~~ is adequately articulated by such design features as variable setbacks, stoops, bay windows or changes in the heights of the #buildings#; and

(2) the #development# or #enlargement# will not be incompatible with #buildings# on the surrounding #blocks#.

The Commission may prescribe appropriate conditions and safeguards to minimize adverse effects on the character of the surrounding area.

* * *

Basic Regulations - Rear Yards

23-47
Minimum Required Rear Yards

* * *

Regulations Applying in Special Situations

Side Yards

23-48
Special Provisions for Existing Narrow Zoning Lots

R1 R2 R3 R4 R5 R6 R7 R8 R9 R10

In all districts, as indicated, except R2X, R3A, R3X, R4A, R4-1, R4B, R5A, R5B or R5D Districts, the required total width of #side yards# for a #single-family detached# or #two-family detached residence# may be reduced by four inches for each foot by which the width of a #zoning lot# is less than that required under the provisions of Section 23-32 (Minimum Lot Area or Lot Width for Residences) if such #zoning lot# ~~consists entirely of a tract of land which~~:

(a) has less than the prescribed minimum #lot width#; and

(b) was owned separately and individually from all other adjoining tracts of land, both on

December 15, 1961 and on the date of application for a building permit.

However, in no event shall the required width of a #side yard# be less than five feet.

In R5D Districts, no #side yards# shall be required for any #zoning lot# having a width of less than 30 feet along a #street# and existing on the effective date of establishing such district on the #zoning map#.

23-49
Special Provisions for ~~Party or~~ Side Lot Line Walls

R3-1 R3-2 R4 R5

In the districts indicated, except R4A and R5A Districts, ~~a #residence# may be constructed so as to:~~ a #building# containing #residences# may:

(a) ~~utilize a party wall or party walls, or abut an independent wall or walls~~ #abut# an existing #building# located along a #side lot line#, where such #building# was existing on December 15, 1961 or lawfully erected under the terms of this Resolution, provided that walls of the #building# containing #residences# and walls of the existing #building# shall #abut# for a length equal to or greater than one half of the distance between the #street wall line# and #rear wall line# of the existing #building#. For the purposes of this paragraph (a), an "existing #building#" shall not include an #accessory building# located on an #interior# or #through lot#; ~~or~~

~~(b) incorporate a straight line extension of such a wall existing on December 15, 1961 or lawfully erected under the terms of this Resolution; or~~

(~~c~~b) ~~share a party wall or party walls with~~ #abut# other #buildings# containing residences# being erected at the same time on an adjoining #zoning lot# or #zoning lots#.

For such ~~If a~~ #building# containing #residences# ~~is so constructed~~, the #side yard# requirements shall be waived along ~~that boundary~~ the #side lot line# of the #zoning lot# coincident with the #abutting buildings# ~~said party wall or party walls, or independent wall or walls along a #side lot line#~~, and one #side yard# shall be provided along any #side lot line# of the #zoning lot# without an #abutting building# ~~where such a wall is not so utilized, at least eight feet wide~~ with a width of at least eight feet in R3-1, R3-2, R4 or R5 Districts, and four feet ~~wide~~ in R4-1, R4B or R5B Districts.

~~**23-50**~~
~~**EXCEPTIONS FOR SUBDIVISION OF ZONING LOTS AFTER DEVELOPMENT**~~

~~R3 R4 R5~~

~~In the districts indicated, notwithstanding the provisions of Section 23-462 (Side yards for all other residential buildings), after a #detached residential building# has been constructed on a #zoning lot#, such #zoning lot# may be subdivided, subject to any other applicable regulations of this Resolution, so that portions of the #building# are located on different #zoning lots#.~~

~~After such a subdivision, #side yard# requirements shall apply only:~~

~~(a) where #side yard# requirements applied along a #side lot line# of the original #zoning lot#; and~~

~~(b) where #side lot lines# of the subdivided #zoning lot# separate #detached buildings#.~~

~~The area of any such required #side yard# shall not be included in computing the #lot area# of any such subdivided #zoning lot#.~~

23-51
Special Provisions for Yards ~~Applying~~ Adjacent to R1 through ~~R6B~~ R5 Districts

R6 R7 R8 R9 R10

In the districts indicated, the provisions of this Section shall apply to ~~those portions of #developments# or #enlargements# on~~ #zoning lots# located, wholly or partially, within an R6, R7, R8, R9 or R10 District that are adjacent to ~~and within 25 feet of~~ a #zoning lot# located wholly or partially within an R1, R2, R3, R4~~,~~ or R5 ~~or R6B~~ District.

~~Such portions of a #development# or #enlargement# shall:~~

~~(a) not exceed a height of 35 feet where such adjoining district is an R1, R2, R3, R4 or R5 District; and~~

~~(b) comply with the height and setback regulations of an R6B District where such adjoining district is an R6B District.~~

~~Furthermore, except where such adjacent lot is wholly or partially within an R6B District, a~~ A #side yard# at least eight feet wide shall be provided along the entire length of the common #side lot line#. Such #side yard# may be used for #accessory# parking.

Rear Yards

23-52
Special Provisions for Shallow Interior Lots

R3 R4 R5 R6 R7 R8 R9 R10

In the districts indicated, if an #interior lot# ~~consists entirely of a tract of land which~~:

(a) was owned separately and individually from all other adjoining tracts of land, both on December 15, 1961 and on the date of application for a building permit; and

(b) is less than 70 feet deep at any point;

the depth of a required #rear yard# for such #interior lot# may be reduced by one foot for each foot by which the maximum depth of such #zoning lot# is less than 70 feet. On any #interior lot# with a maximum depth of 50 feet or less, the minimum depth of a required #rear yard# shall be ten feet.

23-53
Special Provisions for Through Lots

R1 R2 R3 R4 R5 R6 R7 R8 R9 R10

In all districts, as indicated, the regulations of this Section shall apply to all #through lots#, except as provided in Section 23-471 (Beyond one hundred feet of a street line). In the case of a #zoning lot# occupying an entire #block#, no #rear yard# or #rear yard equivalent# shall be required.

23-531
Excepted through lots

R1 R2 R3 R4 R5 R6 R7 R8 R9 R10

(a) In all districts, as indicated, no #rear yard# regulations shall apply to any #through lots#

that extend less than 110 feet in maximum depth from #street# to #street#.

R6 R7 R8 R9 R10

(b) In the districts indicated, for #zoning lots ~~developed# or #enlarged# pursuant to the~~ containing #Quality Housing buildings# ~~Program~~, no #rear yard# regulations shall apply to any #zoning lot# that includes a #through lot# portion that is contiguous on one side to two #corner lot# portions and such #zoning lot# occupies the entire #block# frontage of a #street#.

23-532
Required rear yard equivalents

R1 R2 R3 R4 R5 R6 R7 R8 R9 R10

In all districts, as indicated, on any #through lot# that is 110 feet or more in maximum depth from #street# to #street#, one of the following #rear yard equivalents# shall be provided:

(a) an open area with a minimum depth of 60 feet, midway (or within five feet of being midway) between the two #street lines# upon which such #through lot# fronts;

(b) two open areas, each adjoining and extending along the full length of a #street line# and each with a minimum depth of 30 feet measured from such #street line#, except the depth of such required open area along one #street line# may be decreased, provided that:

(1) a corresponding increase in the depth of the open area along the other #street line# is made; and

(2) any required #front yards# or front setback areas are maintained; or

(c) an open area adjoining and extending along the full length of each #side lot line# with a minimum width of 30 feet measured from each such #side lot line#.

However, in #lower density growth management areas# and in R5D, R6A, R6B, R7A, R7B, R7D, R7X, R8A, R8B, R8X, R9A, R9D, R9X, R10A and R10X Districts, and for ~~#buildings developed# or #enlarged# pursuant to the~~ #Quality Housing buildings# ~~Program~~ in other R6 through R10 Districts, on any #through lot# at least 180 feet in maximum depth from #street# to #street#, a #rear yard equivalent# shall be provided only as set forth in paragraph (a) of this Section.

Any such #rear yard equivalent# shall be unobstructed from its lowest level to the sky, except as provided in Section 23-44 (Permitted Obstructions in Required Yards or Rear Yard Equivalents).

* * *

23-60
HEIGHT AND SETBACK REGULATIONS

Definitions and General Provisions

23-61
Definitions

Words in italics are defined in Section 12-10 (DEFINITIONS) or, if applicable exclusively to this Section, in this Section.

23-62
Permitted Obstructions

In all #Residence Districts#, except as provided in Section 23-621 (Permitted obstructions in certain districts), the ~~following shall not be considered~~ obstructions listed in paragraphs (a) through (h) in this Section ~~and may thus~~ shall be permitted to penetrate a maximum height limit or #~~front# or #rear~~ sky exposure plane~~s~~# set forth in Sections 23-63 (Maximum Height of Walls and Required Setbacks), 23-64 (Alternate Front Setbacks) or 23-69 (Special Height Limitations)~~:~~.

(a) Balconies, unenclosed subject to the provisions of Section 23-13;

(b) Chimneys or flues, with a total width not exceeding 10 percent of the #aggregate width of street walls# of a #building# at any level;

(c) Dormers having an #aggregate width of street walls# equal to not more than 50 percent of the width of the #street wall# of a #detached# or #semi-detached single-# or #two-family residence#;

(d) Elevators or stair bulkhead, roof water tanks or cooling towers (including enclosures), each having an #aggregate width of street walls# equal to not more than 30 feet. However, the product, in square feet, of the #aggregate width of street walls# of such obstructions facing each #street# frontage, times their average height, in feet, shall not exceed a figure equal to four times the width, in feet, of the #street wall# of the #building# facing such frontage. For the purposes of this paragraph (d), #abutting buildings# on a single #zoning lot# may be considered to be a single #building#. Portions of elevator shafts and associated vestibules that provide access to a roof pursuant to paragraph (e) of this Section shall not be included in the limitations on width or surface area of this paragraph (d);

(e) Elevator shafts, portions of which provide an elevator stop with access to a roof, and associated vestibules providing access to such roof, provided that such vestibules include no more than 60 square feet of #floor area#;

~~(e)~~(f) Flagpoles or aerials;

~~(f)~~(g) Parapet walls, not more than four feet high;

~~(g)~~(h) Wire, chain link or other transparent fences~~.~~;

(i) Building columns having an aggregate width equal to not more than 20 percent of the #aggregate width of street walls# of a #building# are a permitted obstruction, to a depth not exceeding 12 inches, in an #initial setback distance#, optional front open area, or any other required setback distance or open area set forth in Sections 23-63, 23-64, or 23-65 (Tower Regulations).

23-621
Permitted obstructions in certain districts

* * *

R6A R6B R7A R7B R7X R8A R8B R8X R9A R9X R10A R10X

(c) In the districts indicated, and for ~~#buildings developed# or #enlarged# pursuant to the~~ #Quality Housing buildings# ~~Program~~ in other R6, R7, R8, R9 and R10 Districts, the permitted obstructions set forth in Section 23-62 shall apply to any #building or other structure#. In addition, a dormer may be allowed as a permitted obstruction within a required front setback distance. Such dormer may exceed a maximum base height specified for such district provided that on any #street# frontage, the aggregate width of all dormers at the maximum base height does not exceed 60 percent of the ~~length~~ width of the #street wall# of the highest #story# entirely below the maximum base height. For each foot of height above the maximum base height, the aggregate width of all dormers shall be decreased by one percent of the #street wall# width of the highest #story# entirely below the maximum base height.

DORMER

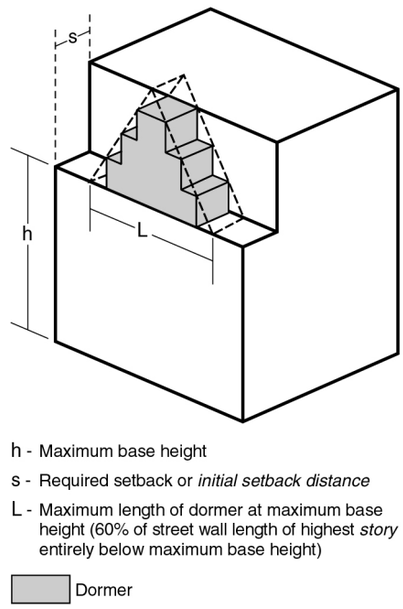

R5D

(d) In R5D Districts, permitted obstructions shall be as set forth in Section 23-62, except that elevator or stair bulkheads, roof water tanks, cooling towers or other mechanical equipment (including enclosures) may exceed a maximum height limit provided that the product, in square feet, of the #aggregate width of street walls# of such obstructions facing each #street# frontage, times their average height, in feet, shall not exceed a figure equal to eight times the width, in feet, of the #street wall# of the #building# facing such frontage. For the purposes of this paragraph (d), #abutting buildings# on a single #zoning lot# may be considered to be a single #building#;

23-63
Maximum Height of Walls and Required Setbacks

R1 R2 R3 R4 R5 R6 R7 R8 R9 R10

In all districts, as indicated, the maximum height of a front wall or of any other portion of a #building or other structure# shall be set forth in this Section, except as otherwise provided in Sections 23-62 (Permitted Obstructions), 23-64 (Alternate Front Setbacks), 23-65 (Tower Regulations), 23-692 (Height limitations for narrow buildings or enlargements), 23-693 (Special provisions applying adjacent to R1 through R6B Districts) or 74-85 (Special Height and Setback Regulations).

23-631
Height and setback in R1, R2, R3, R4 and R5 Districts

R1 R2

(a) In the districts indicated, except R1-2A, R2A and R2X Districts, the front wall or any other portion of a #building or other structure# shall not penetrate the #sky exposure plane# set forth in the following table:

MAXIMUM HEIGHT OF FRONT WALL
AND REQUIRED FRONT SETBACKS

Height above #Front Yard Line# (in ft.)	#Sky Exposure Plane# Slope over #Zoning Lot# (expressed as a ratio of vertical distance to horizontal distance) Vertical Distance	Horizontal Distance	District
25	1 to	1	R1 R2

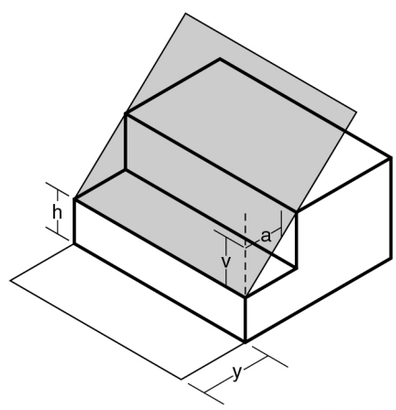

a - Horizontal distance
v - Vertical distance
h - Height of *sky exposure plane* above *front yard line level*
y - Depth of required *front yard*
Sky Exposure Plane

SKY EXPOSURE PLANE

R1-2A R2A R2X R3 R4 R4A R4-1 R5A

(b) In the districts indicated, the height and setback of a #building or other structure# shall be as set forth herein except where modified pursuant to paragraphs (h) and (i) of this Section.

For the purposes of this Section, where #base planes# of different elevations apply to different portions of a #building or other structure#, each such portion of the #building# may be considered to be a separate #building#. Furthermore, for the purposes of this Section, #building segments# may be considered to be separate #buildings# and #abutting #–semi-detached buildings# may be considered to be one #building#.

The perimeter walls of a #building or other structure# are those portions of the outermost walls enclosing the #floor area# within a #building or other structure# at any level and height is measured from the #base plane#. Perimeter walls are subject to setback regulations at a maximum height above the #base plane# of:

21 feet	R2A R2X R3 R4A
25 feet	R1-2A R4 R4-1 R5A
26 feet*	R3 R4A R4-1 within #lower density growth management areas#

* In R3, R4A and R4-1 Districts within #lower density growth management areas#, where a #base plane# is established at a #base flood elevation# higher than grade, the maximum perimeter wall height shall be 21 feet above such base flood elevation or 26 feet above grade, whichever is more.

Above these heights, sloping planes control the maximum height of the #building or other structure# requiring either a setback or a pitched roof. These planes start at the maximum permitted height of the perimeter walls and meet at a ridge line of 35 feet above the #base plane#. The exact locations of these planes are flexible and are determined in the steps set forth in paragraphs (1) through (5) as follows:

(1) At a height of 35 feet above and parallel to the #base plane#, a plane is projected above the area enclosed by and including the perimeter walls of the #building or other structure#. A second plane (the perimeter wall plane) is projected in the same manner at a height of 21 or 25 feet above the #base plane#. (See Figure A)

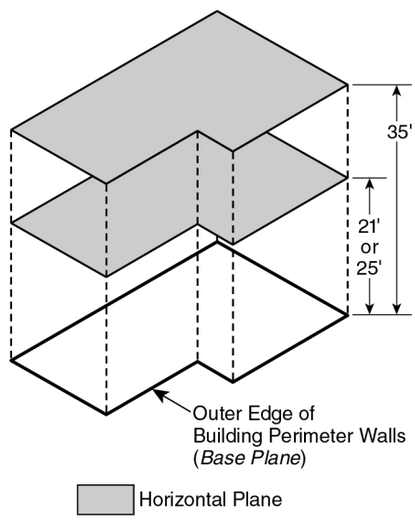

Figure A

(2) Each perimeter wall of the #building or other structure# with a horizontal dimension of 8 feet or more which projects from an adjacent perimeter wall at least 18 inches may have an apex point directly above it on the 35 foot high plane. (See Figure B). The location of the apex point is flexible provided it is directly above its perimeter wall and provided a line drawn from the intersection of two perimeter walls to such an apex point does not exceed 80 degrees to the horizontal. An apex point is not required for each qualifying perimeter wall; however, the maximum number of apex points above each such wall is one.

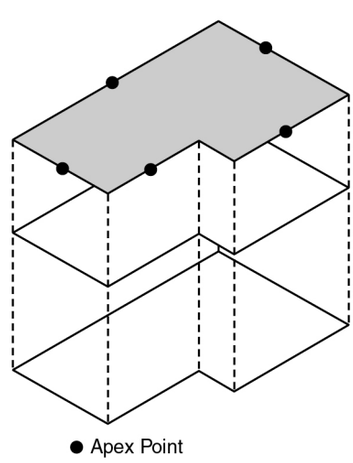

Figure B

(3) One "ridge line" is extended in a straight line from each apex point along the 35 foot high plane. Ridge lines which connect two apex points may cross other ridge lines. Otherwise, ridge lines which extend from only one apex point must terminate at a point of intersection with another ridge line. (See Figure C)

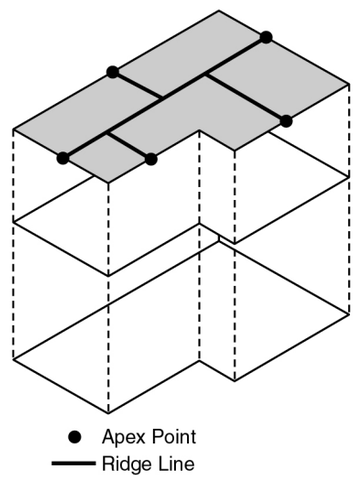

Figure C

(4) Sloping planes are extended in a straight line outward and downward from each ridge line until they intersect the perimeter wall plane. Every sloping plane generated must intersect the perimeter wall plane for the full width of the ridge line from which it extends. (See Figure D). The maximum angle of pitch for any sloping plane may not exceed 80 degrees to the horizontal. Sloping planes extended from ridge lines perpendicular or within 45 degrees of being perpendicular to each other may intersect, in which case the higher plane defines the limit of the envelope. Sloping planes extended from ridge lines parallel or within 45 degrees of being parallel to each other must intersect the perimeter wall plane without intersecting each other.

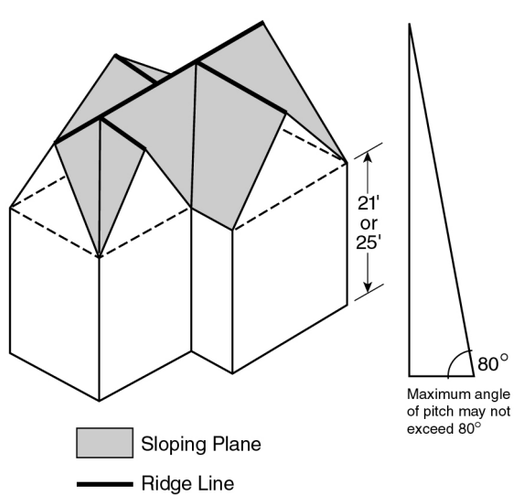

Figure D

(5) The perimeter walls are then extended vertically beyond the perimeter wall plane, up to the heights defined by the sloping planes generated in paragraph (4). (See Figure E). The perimeter walls of the #building or other structure#, the sloping

planes and the perimeter wall extensions define the building envelope. (See Figure F). The building envelope may be penetrated above the maximum permitted perimeter wall height by those items set forth in Section 23-621 (Permitted obstructions in certain districts). Those items listed in Section 23-44 (Permitted Obstructions in Required Yards or Rear Yard Equivalents), and roofed porches and porticoes subject to all applicable provisions, may penetrate the building envelope below the maximum permitted perimeter wall height. Eaves may extend the roof lines 18 inches beyond the exterior walls.

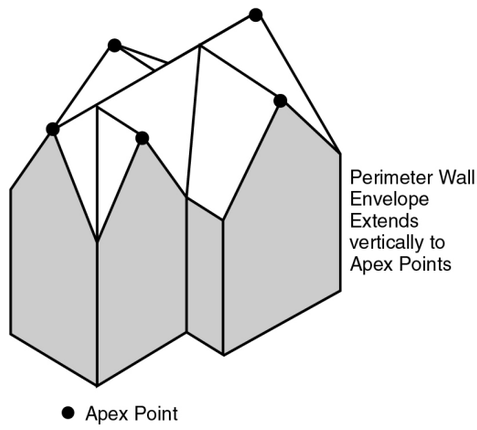

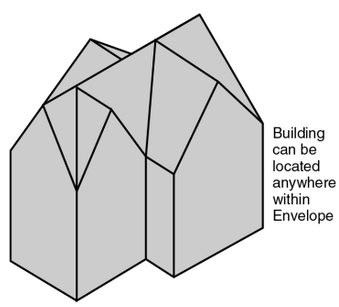

Figure E and F

R2X R3 R4 R4A R4-1 R5A

(6) Special Situations

(i) For convex curved perimeter walls the #building or other structure# must be within a plane curve tapering uniformly to a vertex located at a height of 35 feet. For concave curved perimeter walls, the #building or other structure# must lie within a plane curve extending from the maximum perimeter wall height to a ridge line parallel to the prolongation of the perimeter wall at the 35 foot level. Such plane curves may not exceed a pitch of 80 degrees in relation to a plane drawn parallel to the #base plane# at the maximum height of the permitted perimeter wall. (See Figure G).

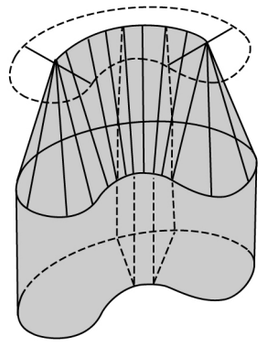

Figure G

R2X

(ii) In the district indicated, at the 21 foot maximum permitted height of a perimeter wall, sloping planes are projected inwards and upwards. From a permitted front perimeter wall and from 21 feet above the #base plane# and 20 feet from and parallel to a #rear lot line#, such sloping plane shall not exceed a pitch of 45 degrees in relation to a plane drawn parallel to the #base plane# at a height of 21 feet. (See Figure H). Other sloping planes slope toward a ridge line at 35 feet and may not exceed a pitch of 80 degrees in relation to a plane drawn parallel to the #base plane# at a height of 21 feet.

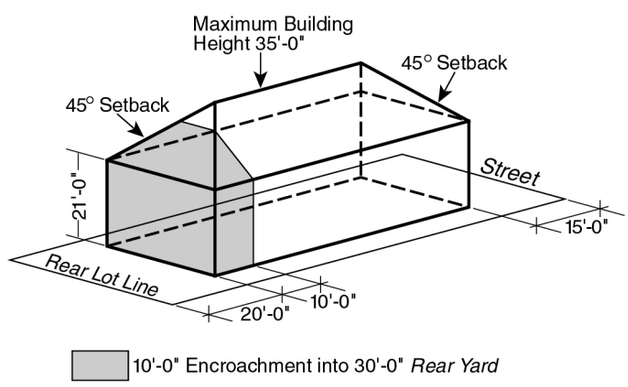

Figure H

R4B

(c) In the district indicated, no portion of the #building or other structure#, including the apex of a roof, shall penetrate a plane 24 feet in height above the #base plane# except for permitted obstructions as set forth in Section 23-62 (Permitted Obstructions).

R5

(d) In the district indicated, except R5A, R5B and R5D Districts, no portion of a #building or other structure#, including the apex of a roof, may penetrate a plane 40 feet above the #base plane#. In addition, the maximum height of a #street wall# above the #base plane# shall be 30 feet. Above such height, a setback of 15 feet is required. Within the setback distance, no portion of the #building or other structure#, including the apex of a roof, may penetrate a plane rising from the maximum #street wall# height, at 20 degrees to the horizontal. On #corner lots#, the 30 foot maximum #street wall# height shall apply to only one #street# frontage. # ~~Developments# or #enlargements~~ Buildings or other structures# which utilize the optional regulations of Section 23-141 applying to a #predominantly built-up area# shall be subject to the height and setback regulations for an R5B District. The provisions of this paragraph may be modified pursuant to Section 23-

62 and paragraphs (g) and (h) of this Section.

R5B

(e) In the district indicated, no portion of a #building or other structure#, including the apex of a roof, may penetrate a plane 33 feet above the #base plane#. In addition, the maximum height of a #street wall# above the #base plane# shall be 30 feet. Above such height, no portion of the #building or other structure# shall penetrate a plane rising from the maximum #street wall# height, at 20 degrees to the horizontal, to a maximum height of 33 feet above the #base plane#. On #corner lots#, the 30 foot maximum #street wall# height shall apply to only one #street# frontage. The provisions of this paragraph may be modified pursuant to Section 23-62 and paragraph (h) of this Section.

R5D

(f) In the district indicated, no portion of a #building or other structure# shall penetrate a plane 40 feet above the #base plane#.

R3A R4A R4-1 R4B R5B

(g) In the districts indicated, a second #story# line-up is required as follows:

Where at least 75 percent of the ~~#residential~~ buildings# containing #residences# within 150 feet of the #side lot lines# of the #zoning lot# have a first #story# front projection that is at least 50 percent of the width of the #building#, the #street wall# ~~of the #development# or #enlargement#~~ shall be no closer to the #street line# than the second #story street wall# of an adjacent ~~#residential~~ building# containing #residences# facing on the same #street#.

~~One~~ Projections from the first #story street wall# are permitted ~~projections in front of the #building# are permitted for new #developments# or #enlargements#~~ provided that such projections are no closer to the #street line# than an adjacent #front yard line#, and such projections are no higher than 13 feet above the #street wall line level#. Projections from the second #story street wall# are permitted ~~for new #developments# or #enlargements#~~ provided that the ~~aggregate~~ width of all projections at that level does not exceed 33 percent of the ~~aggregate~~ width of the #building# at the second #story#, and the depth of the projections does not exceed three feet.

(h) The height and setback regulations of this Section are modified as follows:

* * *

(4) In the #Special Ocean Parkway District#, the #Special Coney Island Mixed Use District#, and the #Special Hunters Point Mixed Use District#, for #buildings or other structures ~~developed# or #enlarged# pursuant~~ subject to the regulations of an R5 District other than an R5D District, no portion of a #building or other structure#, including the apex of a roof, may penetrate a plane 40 feet above the #base plane#. In addition, the maximum height of a #street wall# above the #base plane# shall be 32 feet. Above such height, a setback of 15 feet is required. Within the setback distance, no portion of the #building or other structure#, including the apex of a roof, may penetrate a plane rising from the maximum #street wall# height at 20 degrees to the horizontal. On #corner lots#, the 32 foot maximum #street wall# height shall apply to only one #street# frontage.

In these special districts, for #developments# or #enlargements# which utilize the optional regulations applicable to a #predominantly built-up area#, the maximum height of a ~~#residential~~ building# containing #residences# shall not exceed 32 feet above the #base plane#. Furthermore, for such #developments# or #enlargements# with pitched roofs, the midpoint of such pitched roof shall not exceed a height of 32 feet above the #base plane#. The provisions of this paragraph may be modified pursuant to Section 23-62 and paragraph (h) of this Section.

(5) In accordance with Section 78-31 (Location of Buildings, Distribution of Bulk and Open Space and Modification of Height and Setback), ~~#development#~~ #buildings# ~~wholly~~ within a #large-scale residential development# may use the alternate height and setback regulations set forth in Section 78-31 paragraphs (b)(1) through (b)(3).

R3-2 R4 R5

(i) In the districts indicated, except R4A, R4B, R4-1, R5A, R5B and R5D Districts, the City Planning Commission may authorize a #building or other structure# that penetrates the height and setback regulations set forth in paragraphs (b) and (d) above except for #buildings# utilizing the optional regulations for #predominantly built-up areas#. As a condition for granting such authorizations the Commission shall find that:

(1) by concentrating permitted #floor area# in a #building# or #buildings# of greater height the preservation of an existing #building#, topography, vegetation, or view corridors having environmental, historic or aesthetic value to the public will be assured, and that such preservation would not be possible by careful siting of lower #buildings# containing the same permitted #floor area#; or, for #non-profit residences for the elderly#, the additional #floor area# permitted ~~for such #developments#~~ is accommodated in an efficient manner;

(2) such modification is the least modification required to achieve the purpose for which it is granted;

(3) the proposed modification does not impair the essential character of the surrounding area; and

(4) that the proposed modification will not have adverse effects upon light, air, and privacy of adjacent properties and of any existing #buildings# on the #zoning lot#.

Applications for authorizations shall be referred to the affected Community Board for a period of at least 30 days for comment. The City Planning Commission shall grant in whole or in part or deny the application within 60 days of the completion of the Community Board review period.

23-632
Front setbacks in districts where front yards are not required

R6 R7 R8 R9 R10

(a) In the districts indicated, except for #Quality Housing buildings#, and except as set forth in paragraph (b) of this Section 23-632 ~~where #front yards# are not required~~, if the front wall or other portion of a #building or other structure# is located at the #street line# or within the #initial setback distance# set forth in the following table, the height of such front wall or other portion of a #building or other structure# shall not exceed the maximum height above #curb level# set forth in the following table. Above such specified maximum height and beyond the #initial setback distance#, the #building or other structure# shall not penetrate the #sky exposure plane# set forth in the following table:

MAXIMUM HEIGHT OF FRONT WALL AND REQUIRED FRONT SETBACKS

Maximum Height of a Front Wall	#Sky Exposure Plane#
	Slope over #Zoning Lot# (expressed as a ratio

#Initial Setback Distance# (in feet)		or other portion of a #Building or other structure# within the #Initial Setback Distance#	Height above #Street Line# (in feet)	of vertical distance to horizontal distance)			
				On #Narrow Street#		On #Wide Street#	
On #Narrow Street#	On #Wide Street#			Vertical Distance	Horizontal Distance	Vertical Distance	Horizontal Distance
R6 or R7 Districts							
20	15	60 feet or six #stories#, whichever is less	60	2.7	to 1	5.6	to 1
R8 R9 or R10 Districts							
20	15	85 feet or nine #stories#, whichever is less	85	2.7	to 1	5.6	to 1

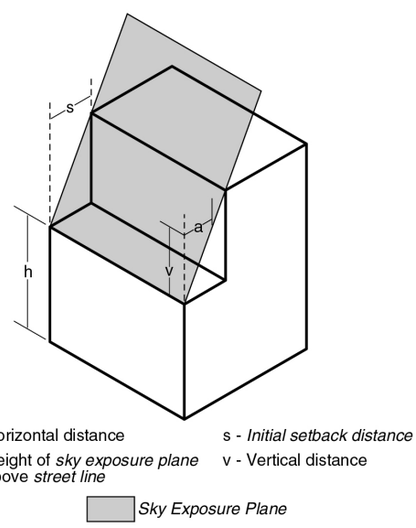

SKY EXPOSURE PLANE
R6 R7 R8 R9 R10 Districts

R6A R7A R8A R9A R10A R6B R7B R8B R7X R8X R9X R10X

(b) In the districts indicated, for all #buildings or other structures#, and for ~~any #development#, or #enlargement# where permitted, pursuant to the~~ #Quality Housing buildings# ~~Program~~ in other R6, R7, R8, R9 or R10 Districts, the provisions of this Section 23-632 and Sections 23-64 (Alternate Front Setbacks) and 23-65 (Tower Regulations) shall be inapplicable. In lieu thereof, the provisions of Section 23-633 (Street wall location and height and setback regulations in certain districts) shall apply.

23-633
Street wall location and height and setback regulations in certain districts

R6A R6B R7A R7B R7D R7X R8A R8B R8X R9A R9D R9X R10A R10X

In the districts indicated, #street wall# location and height and setback regulations are set forth in this Section. The height of all #buildings or other structures# shall be measured from the #base plane#. The provisions of Sections 23-64 (Alternate Front Setbacks) and 23-65 (Tower Regulations) shall not apply, except as otherwise set forth for #buildings# in R9D and R10X Districts.

R6A R7A R7D R7X R9D

(a) #Street wall# location

(1) In the districts indicated, for all #buildings#, and for #Quality Housing buildings# ~~developed# or #enlarged# pursuant to the Quality Housing Program~~ on #wide streets# in R6 or R7 Districts without a letter suffix, the #street wall# ~~of any #development# or #enlargement#~~ shall be located no closer to the #street line# than the closest #street wall# of an existing #building# to such #street line#, located on the same #block#, and within 150 feet of such #building# ~~#development# or #enlargement#~~. However, a #street wall# need not be located further from the #street line# than 15 feet. On #corner lots#, these #street wall# location provisions shall apply along only one #street line#.

R6B R7B R8B

(2) In the districts indicated, for all #buildings#, and for #Quality Housing buildings# ~~developed# or #enlarged# pursuant to the Quality Housing Program~~ on #narrow streets# in R6 and R7 Districts without a letter suffix, the #street wall# of ~~any #development# or #enlargement#~~ a #building# on a #zoning lot# with at least 50 feet of frontage along a #street line# shall be located no closer to the #street line# than the #street wall# of an adjacent existing #building#. On #zoning lots# with less than 50 feet of frontage along a #street line#, the #street wall# ~~of any #development# or #enlargement#~~ shall be located no closer to nor further from the #street line# than the #street wall# of an adjacent existing #building#. For all #zoning lots#, the #street wall# ~~of a #building#~~ need not be located further from a #street line# than 15 feet. On #corner lots#, the #street wall# along one #street line# need not be located further from the #street line# than five feet.

R8A R8X R9A R9X R10A R10X

(3) In the districts indicated, for all #buildings#, and for #Quality Housing buildings# ~~developed# or #enlarged# pursuant to the Quality Housing Program~~ in R8 or R9 Districts without a letter suffix, and in other R10 Districts, the following #street wall# location provisions shall apply along #wide streets# and along #narrow streets# within 50 feet of their intersection with a #wide street#:

(i) the #street wall# shall extend along the entire #street# frontage of a #zoning lot#;

(ii) at least 70 percent of the #aggregate width of street walls# shall be located within eight feet of the #street line# and extend to at least the minimum base height specified in the table in this Section or the height of the #building#, whichever is less. The remaining 30 percent of the #aggregate width of street walls# may be recessed beyond eight feet of the #street line# provided any such recesses deeper than 10 feet along a #wide street# or 15 feet along a #narrow street# are located within an #outer court#; and

(iii) the #street wall# location provisions of paragraph (a)(3) of this Section, inclusive, shall not apply to houses of worship.

~~The preceding #street wall# location provisions shall not apply along #narrow streets# beyond 50 feet of their intersection with a #wide street#, nor along any~~

~~#street# frontage of a #zoning lot# occupied by existing #buildings#~~
No #street wall# location provisions shall apply along any #narrow street# beyond 50 feet of their intersection with a #wide street#.

R6A R6B R7A R7B R7D R7X R8A R8B R8X R9A R9D R9X R10A R10X

(b) Setback regulations

In the districts indicated, for all #buildings or other structures#, and for #Quality Housing buildings# ~~developed# or #enlarged# pursuant to the Quality Housing Program~~ in other R6, R7, R8, R9 and R10 Districts, setbacks are required for all portions of #buildings or other structures# that exceed the maximum base height specified in the table in this Section. Such setbacks shall be provided in accordance with the following regulations:

(1) At a height not lower than the minimum base height or higher than the maximum base height specified in the table in this Section, a setback with a depth of at least 10 feet shall be provided from any #street wall# fronting on a #wide street#, and a setback with a depth of at least 15 feet shall be provided from any #street wall# fronting on a #narrow street#, except such dimensions may include the depth of any permitted recesses in the #street wall#.

(2) On #narrow streets#, where a #street wall# is required to be located further than 10 feet from a #street line# in accordance with paragraph (a) of this Section, the depth of the required setback above the minimum base height may be reduced one foot for every foot that the #street wall# is required to be located beyond 10 feet of the #street line#, but in no event shall a setback less than 10 feet in depth be provided above the minimum base height.

(3) These setback provisions are optional for any building wall that is either located beyond 50 feet of a #street line# or oriented so that lines drawn perpendicular to it, in plan, would intersect a #street line# at an angle of 65 degrees or less. In the case of an irregular #street line#, the line connecting the most extreme points of intersection shall be deemed to be the #street line#. Furthermore, dormers provided in accordance with the provisions of Section 23-621 may penetrate a required setback area.

(4) In R9D Districts, for ~~#developments# or #enlargements#~~ #buildings or other structures# on #zoning lots# that front upon an elevated rail line, at a height between grade level and 25 feet, a setback with a depth of at least 20 feet shall be provided from the #street line# fronting on such elevated rail line. The depth of such setback may be reduced by one foot for every foot that the depth of the #zoning lot#, measured perpendicular to the elevated rail line, is less than 110 feet, but in no event shall a setback less than 10 feet in depth be provided.

(c) Maximum building height

No #building or other structure# shall exceed the maximum building height specified in the table in this Section, except as otherwise provided below:

R9D R10X

In the districts indicated, any ~~#building# or~~ #buildings or other structures# or portions thereof which in the aggregate occupy not more than 40 percent of the #lot area# of a #zoning lot# (or, for #zoning lots# of less than 20,000 square feet, the percentage set forth in the table in Section 23-651), above a height of 85 feet above the #base plane#, is hereinafter referred to as a tower. Dormers permitted within a required setback area pursuant to Section 23-621 (Permitted obstructions in certain districts) shall not be included in tower coverage. Such tower or towers may exceed a height limit of 85 feet above the #base plane# provided:

* * *

R6A R6B R7A R7B R7D R7X R8A R8B R8X R9A R9D R9X R10A R10X

(d) Additional regulations

In the districts indicated, for all #buildings#, and for #Quality Housing buildings# ~~developed# or #enlarged# pursuant to the Quality Housing Program~~ in other R6, R7, R8, R9 and R10 Districts, the following additional regulations shall apply:

(1) Existing #buildings# may be vertically #enlarged# by up to one #story# or 15 feet without regard to the #street wall# location requirements of paragraph (a) of this Section.

(2) On #through lots# which extend less than 180 feet in maximum depth from #street# to #street#, the #street wall# location requirements of paragraph (a) of this Section shall be mandatory along only one #street# frontage.

(3) The #street wall location and minimum base height provisions of paragraph (a) of this Section shall not apply along any #street# frontage of a #zoning lot# occupied by #buildings# whose #street wall# heights or widths will remain unaltered.

(4) The minimum base height provisions of paragraph (a) of this Section shall not apply to #buildings developed# or #enlarged# after (effective date of amendment) that do not exceed such minimum base heights, except where such #buildings# are located on #zoning lots# with multiple #buildings#, one or more of which is #developed#, #enlarged# or altered after (effective date of amendment) to a height exceeding such minimum base heights.

~~(3)~~(5) The City Planning Commission may, upon application, authorize modifications in the required #street wall# location ~~of a #development# or #enlargement#~~ if the Commission finds that existing #buildings#, or existing open areas serving existing #buildings# to remain on the #zoning lot#, would be adversely affected by the location of the #street walls# ~~of the #development# or #enlargement#~~ in the manner prescribed in this Section.

~~(4)~~(6) For any #zoning lot# located in a Historic District designated by the Landmarks Preservation Commission, the minimum base height and #street wall# location regulations of this Section, or as modified in any applicable Special District, shall be modified as follows:

(i) The minimum base height of a #street wall# may vary between the height of the #street wall# of an adjacent #building# before setback, if such height is lower than the minimum base height required, up to the minimum base height requirements of this Section, or as modified in any applicable Special District.

(ii) The maximum base height of a #street wall# may vary between the height of the #street wall# of an adjacent #building# before setback, if such height is higher than the maximum base height allowed, and the maximum base height requirements of this Section, provided that such height not exceed 150 feet and provided such #zoning lot# is located within the area bounded by West 22nd Street, a line 100 feet west of Fifth Avenue, a line midway between West 16th Street and West 17th Street, and a line 100 feet east of Sixth Avenue.

(iii) The location of the #street wall# of any #building# may vary between the #street wall# location requirements of this Section, or as modified in any applicable Special District, and the location of the #street wall# of an adjacent #building# fronting on the same #street line#.

~~(5)~~(7) In R9D Districts, where a #building# on an adjacent #zoning lot# has #dwelling

unit# windows located within 30 feet of a #side lot line# of the #development# or #enlargement#, an open area extending along the entire length of such #side lot line# with a minimum width of 15 feet shall be provided. Such open area may be obstructed only by the permitted obstructions set forth in Section 23-44 (Permitted Obstructions in Required Yards or Rear Yard Equivalents).

MINIMUM BASE HEIGHT, MAXIMUM BASE HEIGHT
AND MAXIMUM BUILDING HEIGHT

District	Minimum Base Height	Maximum Base Height	Maximum Building or other Structure Height
R6B	30	40	50
R6[2]	30	45	55
R6[1] inside #Manhattan Core#	40	55	65
R6[1] outside #Manhattan Core# R6A	40	60	70
R7[2] R7B R7[1] inside #Manhattan Core#	40	60	75
R7[1] outside #Manhattan Core# R7A	40	65	80
R7D	60	85	100
R7X	60	85	125
R8B	55	60	75
R8[2]	60	80	105
R8[1] R8A	60	85	120
R8X	60	85	150
R9[2] R9A[2]	60	95	135
R9A R9[1]	60	102	145
R9D	60	85[4]	--[3]
R9X[2]	60	120	160
R9X[1]	105	120	170
R10[2] R10A[2]	60	125	185
R10[1] R10A[1]	125	150	210
R10X	60	85	--[3]

---

[1] Refers to ~~that portion of a district~~ #zoning lots# or portions thereof ~~which is~~ within 100 feet of a #wide street#.

[2] Refers to ~~that portion of a district~~ #zoning lots# on a #narrow street# except portions of such #zoning lots# within a distance of 100 feet from ~~its~~ an intersection with a #wide street#.

[3] #Buildings or other structures # may exceed a maximum base height of 85 feet in accordance with paragraph (c) of this Section.

[4] For ~~#developments# or #enlargements#~~ #buildings or other structures# that front upon an elevated rail line, the maximum base height shall be 25 feet.

23-634
Special height and setback regulations in R10 Districts within Community District 7, Borough of Manhattan

Within the boundaries of Community District 7 in the Borough of Manhattan, all ~~#developments# or #enlargements#~~ #buildings or other structures# located in R10 Districts, except R10A or R10X Districts, shall comply with the requirements of this Section.

The front building wall of all ~~#developments# or #enlargements#~~ #buildings# on a #zoning lot# ~~having~~ with any frontage on a #wide street#, shall extend along the ~~full length of its #street line# fronting on such #wide streets#~~ entire #wide street# frontage of the #zoning lot# without a setback for a height of 125 feet above the #curb level# or the full height of the #building#, whichever is less. Above a height of 125 feet, the front building wall may be set back at least 10 feet on a #wide street# or 15 feet on a #narrow street#. Above a height of 150 feet, the front building wall shall be set back at least 10 feet. These mandatory front building wall requirements also apply to all ~~#developments# or #enlargements#~~ #buildings# along all #street lines# of #narrow streets# within 50 feet of their intersection with the #street lines# of #wide streets#. For the next 20 feet along the #street line# of a #narrow street#, the mandatory front building wall requirements are optional. The height and setback regulations of the underlying district shall apply along #street lines#, or portions thereof, not subject to the front building wall requirements.

Front wall recesses are permitted above the level of the second #story# ceiling or 23 feet above #curb level#, whichever is less, provided that the aggregate ~~length~~ width of all recesses at the level of any #story# does not exceed 50 percent of the ~~length~~ width of the front wall. The depth of such recess shall not exceed 10 feet. No front wall recesses are permitted within 20 feet of the intersection of two #street lines#.

Front wall openings are permitted below the level of the second #story# ceiling, for entrances only.

The preceding #street wall# location provisions shall not apply along any #street# frontage of a #zoning lot# occupied by existing #buildings# whose #street walls# remain unaffected by alterations or #enlargements# to such existing #buildings#.

However, the provisions of this Section shall not apply to any ~~#development# or #enlargement#~~ #building# for which the City Planning Commission has granted a special permit pursuant to Section 74-95 (Housing Quality) nor shall it apply to any ~~#developments# or #enlargements#~~ #building# located within the #Special Lincoln Square District# or within the former Westside Urban Renewal Area excluding frontages along Central Park West or to the block bounded by Frederick Douglass Circle, Cathedral Parkway, Manhattan Avenue, West 109th Street and Central Park West. On application, the City Planning Commission may grant special authorization for minor modifications of the mandatory front wall provisions of this Section involving an #enlargement#, upon a ~~developer's~~ showing of compelling necessity. Such authorization, however, may in no event include modification of permitted #floor area# regulations.

23-64
Alternate Front Setbacks

R6 R7 R8 R9 R10

(a) In the districts indicated, except for #Quality Housing buildings#, and except as set forth

in paragraph (b) of this Section 23-64, if an open area is provided along the full length of the #front lot line# with the minimum depth set forth in the following table, the provisions of Section 23-63 (Maximum Height of Front Wall and Required Front Setbacks) shall not apply. The minimum depth of such an open area shall be measured perpendicular to the #front lot line#. However, in such instances, except as otherwise provided in Sections 23-62 (Permitted Obstructions) or 23-65 (Tower Regulations), no #building or other structure# shall penetrate the alternate #sky exposure plane# set forth in the following table, and the #sky exposure plane# shall be measured from a point above the #street line#.

In R9 or R10 Districts, the provisions of this Section shall be inapplicable to any #development# or #enlargement# with more than 25 percent of ~~its~~ the total #floor area# of the #building# in #residential use#.

ALTERNATE REQUIRED FRONT SETBACKS

Depth of Optional Front Open Area (in feet)		Alternate #Sky Exposure Plane#				
		Height above #Street Line# (in feet)	Slope over #Zoning Lot# (expressed as a ratio of vertical distance to horizontal distance)			
			On #Narrow Street#		On #Wide Street#	
On #Narrow Street#	On #Wide Street#		Vertical Distance	Hori-zontal Distance	Vertical Distance	Hori-zontal Distance
R6 or R7 Districts						
15	10	60	3.7	to 1	7.6	to 1
R8 R9 R10 Districts						
15	10	85	3.7	to 1	7.6	to 1

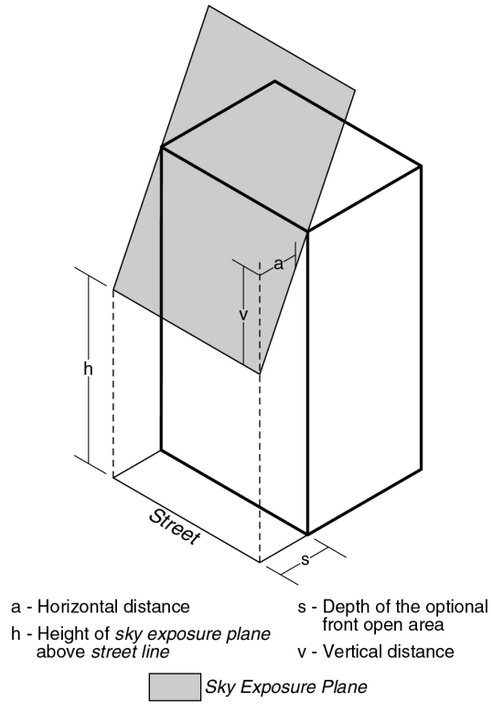

ALTERNATE SKY EXPOSURE PLANE
R6 R7 R8 R9 R10 Districts

R6A R7A R8A R9A R10A R6B R7B R8B R7X R8X R9X R10X

(b) In the districts indicated, for all #buildings or other structures#, the provisions of this Section 23-64 (Alternate Front Setbacks) shall be inapplicable.

Supplementary Regulations

23-65
Tower Regulations

R9 R10

In the districts indicated, except for #Quality Housing buildings#, and except as set forth in paragraph (c) of this Section 23-65, any portion or portions of #buildings# which in the aggregate occupy not more than 40 percent of the #lot area# of a #zoning lot#, or, for #zoning lots# of less than 20,000 square feet, the percentage set forth in the table below, may penetrate an established #sky exposure plane# in accordance with the provisions of this Section. Such portions of #buildings# that penetrate a #sky exposure plane# are hereinafter referred to as towers.

LOT COVERAGE OF TOWERS
ON SMALL ZONING LOTS

Area of #Zoning Lot# (in square feet)	Maximum Percent of #Lot Coverage#
10,500 or less	50
10,501 to 11,500	49
11,501 to 12,500	48

12,501 to 13,500	47
13,501 to 14,500	46
14,501 to 15,500	45
15,501 to 16,500	44
16,501 to 17,500	43
17,501 to 18,500	42
18,501 to 19,999	41

#Buildings developed# or #enlarged# with towers shall comply with either tower-on-base regulations or standard tower regulations, as follows:

(a) Applicability of tower-on-a-base regulations

The tower-on-a-base regulations of Section 23-651 shall apply to any such #building# that:

(1) contains more than 25 percent of its total #floor area# in #residential use#; and

(2) is located on a #zoning lot# that fronts upon a #wide street# and is either within 125 feet from such #wide street# frontage along the short dimension of the #block# or within 100 feet from such #wide street# frontage along the long dimension of the #block#;

If a portion of such #building# is #developed# or #enlarged# with a tower the entire #zoning lot# shall be subject to the provisions of Section 23-651 (Tower-on-a-base).

(b) Applicability of standard tower regulations

The standard tower regulations of Section 23-652 shall apply to any such #building# that does not meet the location and #floor area# criteria of paragraph (a) of this Section.

(c) Inapplicability of tower regulations

The provisions of this Section 23-65 shall not apply to any #building#:

(1) located wholly or partly in a #Residence District#, that is within 100 feet of a #public park# with an area of one acre or more, or a #street line# opposite such a #public park#; or

(2) located in a R9A, R9X, R10A or R10X District

~~In the districts indicated, any #building# or #buildings# or portions thereof which in the aggregate occupy not more than 40 percent of the #lot area# of a #zoning lot# or, for #zoning lots# of less than 20,000 square feet, the percent set forth in Section 23-651 (Towers on small lots), may penetrate an established #sky exposure plane#. (Such #building# or portion thereof is hereinafter referred to as a tower).~~

~~At all levels, such tower shall be located not less than 15 feet from the #street line# of a #narrow street# and not less than 10 feet from the #street line# of a #wide street#.~~

~~Unenclosed balconies, subject to the provisions of Section 23-13 (Balconies), are permitted to project into or over open areas not occupied by towers.~~

~~The provisions of this Section shall not apply to any #building#, located wholly or partly in a #Residence District#, that is within 100 feet of a #public park# with an area of one acre or more, or a #street line# opposite such a #public park#.~~

~~Furthermore, the provisions of this Section shall not apply to any #development# or #enlargement# that:~~

~~(a) is located on a #wide street# and is either within 125 feet from such #wide street# frontage along the short dimension of the #block# or within 100 feet from such #wide street# frontage along the long dimension of the #block#; and~~

~~(b) contains more than 25 percent of its total #floor area# in #residential use#.~~

~~If a portion of such #development# or #enlargement# is #developed# as a tower the entire #development# or #enlargement# shall be subject to the provisions of Section 23-652 (Tower-on-a-base).~~

~~23-651~~
~~Towers on small lots~~

~~R9 R10~~

~~In the districts indicated, a tower may occupy the percent of the #lot area# of a #zoning lot# set forth in the following table:~~

~~LOT COVERAGE OF TOWERS~~
~~ON SMALL ZONING LOTS~~

~~Area of #Zoning Lot# (in square feet)~~	~~Maximum Percent of #Lot Coverage#~~
~~10,500 or less~~	~~50~~
~~10,501 to 11,500~~	~~49~~
~~11,501 to 12,500~~	~~48~~
~~12,501 to 13,500~~	~~47~~
~~13,501 to 14,500~~	~~46~~
~~14,501 to 15,500~~	~~45~~
~~15,501 to 16,500~~	~~44~~
~~16,501 to 17,500~~	~~43~~
~~17,501 to 18,500~~	~~42~~
~~18,501 to 19,999~~	~~41~~

~~23-652~~ 23-651
Tower-on-a-base

~~R9 R10~~

~~In the districts indicated, a~~Any #development# or #enlargement# that meets the location and #floor area# criteria of paragraph (a) of Section 23-65 and includes a tower shall ~~that will contain~~

~~more than 25 percent of the total #floor area# for #residential use# may~~ be constructed as a tower-on-a-base, in accordance with the regulations set forth in this Section. The height of all #buildings or other structures# shall be measured from the #base plane#.

(a) Tower regulations

(1) At any level above a building base (referred to hereinafter as a "base"), any portion or portions of a #building# (referred to hereinafter as a "tower") shall occupy in the aggregate:

(i) not more than 40 percent of the #lot area# of a #zoning lot# or, for a #zoning lot# of less than 20,000 square feet, the percentage set forth in the table in Section ~~23-652 (Towers on small lots)~~ 23-65 (Tower Regulations); and

(ii) not less than 30 percent of the #lot area# of a #zoning lot#.

However, the highest four #stories# of the tower or 40 feet, whichever is less, may cover less than 30 percent of the #lot area# of a #zoning lot# if the gross area of each #story# does not exceed 80 percent of the gross area of that #story# directly below it.

(2) Any tower located above a base shall not be subject to the provisions of Sections 23-63 (Maximum Height of Walls and Required Setbacks).

(3) ~~Within any #building# that includes a tower, at~~ At least 55 percent of the total #floor area# permitted on the #zoning lot# shall be located in #stories# located either partially or entirely below a height of 150 feet.

* * *

(5) No tower or portion thereof shall be located on a #narrow street# at a distance that is more than 100 feet from the intersection with a #wide street#.

Unenclosed balconies, subject to the provisions of Section 23-13 (Balconies), are permitted to project into or over open areas not occupied by towers.

For the purposes of determining the permitted tower coverage and the required minimum distance between #buildings# or portions thereof, that portion of a ~~#development#~~ #zoning lot# located within 125 feet from the #wide street# frontage along the short dimension of a #block# shall be treated as if it were a separate #zoning lot#.

A ~~#development# that contains a~~ tower proposed pursuant to Section 23-65 (Tower Regulations) ~~and~~ that has been granted a special permit by the City Planning Commission prior to February 9, 1994, may be started or continued pursuant to that special permit.

(b) Building base regulations

(1) #Street wall# location

(i) On a #wide street#, and on a #narrow street# within 125 feet of its intersection with a #wide street#, the #street wall# of the base shall occupy the entire #street frontage# of a #zoning lot# not occupied by existing #buildings#. At any height, at least 70 percent of the ~~length~~ width of such #street wall# shall be located within eight feet of the #street line#, and the remaining 30 percent of such #street wall# may be recessed beyond eight feet of the #street line# to provide #outer courts# or balconies.

However, no such recesses shall be permitted within 20 feet of an adjacent #building# fronting on the same #street line# or within 30 feet of the intersection of two #street lines#.

* * *

(2) Height of #street wall#

All #street walls# of a base shall rise vertically without setback to a height of not less than 60 feet nor more than 85 feet except:

(i) On a #wide street#, if the height of the #street wall# of an adjacent #building# fronting on the same #street line# exceeds 60 feet and if such #street wall# is located within 10 feet of the #street line#, the #street wall# of the base shall match the height of the #street wall# of the adjacent #building# to a maximum height of 100 feet by either of three alternatives:

* * *

(ii) On a #narrow street# beyond 100 feet of its intersection with a #wide street#, the #street wall# of a base shall rise vertically to a height of at least 60 feet when the adjacent #building# is either less than 60 feet or greater than 85 feet, or match the height of the adjacent #building# when the height of such #building# is between 60 feet and 85 feet.

For the purposes of this paragraph, (b)(2), inclusive, the height of an adjacent #building# shall be the height of a #street wall#, before setback, if applicable, of that portion of an existing #building# nearest the ~~new~~ #development# or #enlargement#, fronting on the same #street line#, and located on the same or an adjoining #zoning lot#.

* * *

(c) Modification of tower coverage and #floor area# distribution requirements

The tower #lot coverage# and #floor area# distribution requirements set forth in paragraph (a)(3) of this Section shall be modified for #buildings# that provide articulation of a base in accordance with the following provisions:

(1) Recesses

* * *

(2) Dormers

For each #street# frontage with dormers, provided in accordance with paragraph (b)(3) of this Section, that measure, at their lowest level, at least 50 percent of the ~~length~~ width of the #street wall# of the highest #story# of the base, and measure, at their highest level, at least 25 percent of the ~~length~~ width of the highest #story# of the base, and rise at least 25 feet above the base, the percent of #lot coverage# of the tower portion of the #building# may be decreased by 0.5 percent, and the minimum percent of total building #floor area# distribution below a level of 150 feet may be reduced by 0.25 percent.

(3) Matching provision

* * *

23-652
Standard tower

Any #development# or #enlargement# that does not meet the location and #floor area# criteria of paragraph (a) of Section 23-65 and includes a tower shall be constructed as a standard tower in accordance with the regulations set forth in this Section.

At all levels, a tower shall be located not less than 15 feet from the #street line# of a #narrow street# and not less than 10 feet from the #street line# of a #wide street#.

Unenclosed balconies, subject to the provisions of Section 23-13 (Balconies), are permitted to project into or over open areas not occupied by towers.

23-66
Required Side and Rear Setbacks

R1 R2 R3 R4 R5 R6 R7 R8 R9 R10

In all districts, as indicated, side and rear setbacks shall be provided as specified in this Section. Unenclosed balconies, subject to the provisions of Section 23-13 (Balconies), are permitted to project into or over any open areas required by the provisions of this Section.

23-661
Required side and rear setbacks for tall ~~residential~~ buildings in low bulk districts

R1 R2 R5

In R1 and R2 Districts, any portion of a #~~residential~~ building or other structure# bounding a #side yard# or a #rear yard# which is more than 30 feet above the mean level of adjacent natural grade shall be set back from such #side yard# line or #rear yard line# for a distance equal to one-half the height of that portion of the #~~residential~~ building or other structure # which is higher than 30 feet above the mean level of adjacent natural grade.

In an R5 District, except R5A and R5D Districts, any portion of a #~~residential~~ building or other structure # bounding a #side yard# or a #rear yard# which is more than 33 feet above the level of the #base plane# shall be set back from such #side yard# line or such #rear yard line# for a distance equal to one-half the height of that portion of the #~~residential~~ building or other structure # which is higher than 33 feet above the level of the #base plane# (See illustration).

The following are permitted to project into any open area required under the provisions of this Section:

(a) parapet walls not more than four feet high; and

(b) chimneys or flues with a total width not exceeding 10 percent of the width of the building's walls facing such open area.

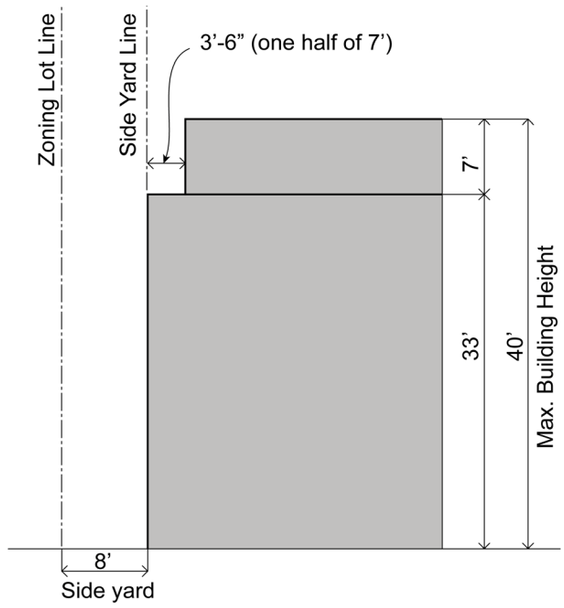

SIDE YARD SETBACK (R5 EXAMPLE)

* * *

23-663
Required rear setbacks for tall buildings in other districts

R6 R7 R8 R9 R10

(a) In the districts indicated, except as provided in paragraph (b) of this Section, no portion of a #building or other structure # more than 125 feet above yard level shall be nearer to a #rear yard line# than 20 feet. However, this provision shall not apply to any portion of a #building# that qualifies as a tower under the provisions of Section 23-65 (Tower Regulations).

In the case of a #through lot# on which a #rear yard equivalent# is provided as set forth in paragraph (a) of Section 23-533 (Required rear yard equivalents), the requirements of this Section shall apply as if such #rear yard equivalent# were two adjoining #rear yards#. If a #rear yard equivalent# is provided as set forth in paragraphs (b) or (c) of Section 23-533, the requirements of this Section shall not apply.

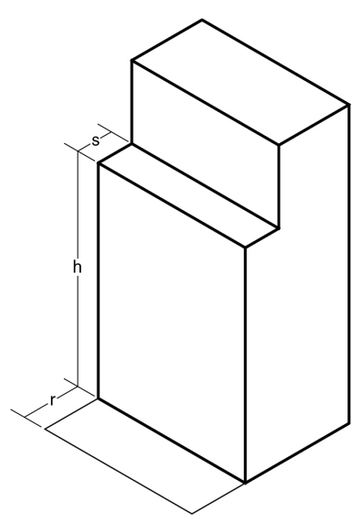

h - Height of wall above *rear yard*
r - Depth of required *rear yard*
s - Depth of required *rear yard* setback

REAR SETBACK

R6A R6B R7A R7B R7D R7X R8A R8B R8X R9A R9D R9X R10A R10X

(b) In the districts indicated, for all #buildings or other structures#, and for #Quality Housing buildings# ~~developed# or #enlarged# pursuant to the Quality Housing Program~~ in other R6 through R10 Districts, no portion of a #building or other structure# that exceeds the applicable maximum base height specified in Section 23-633 (Street wall location and height and setback regulations in certain districts) shall be nearer to a #rear yard line# than 10 feet.

In the case of a #through lot# on which a #rear yard equivalent# is provided as set forth in paragraph (a) of Section 23-533, the requirements of this Section shall apply as if such #rear yard equivalent# were two adjoining #rear yards#. If a #rear yard equivalent# is provided as set forth in paragraph (b) of Section 23-533, the requirements of this Section shall not apply.

Regulations Applying in Special Situations

23-67
Special Provisions Relating to Specified Streets

* * *

23-69
Special Height Limitations

23-691
Limited Height Districts

* * *

23-692
Height limitations for narrow buildings or enlargements

R7-2 R7D R7X R8 R9 R10

~~In the districts indicated, if the width of a #street wall# of a new #building# or the #enlarged# portion of an existing #building# is 45 feet or less, the alternate front setback and tower regulations of Sections 23-64, 23-65, 33-44 and 33-45 shall be inapplicable.~~

~~Subject to applicable front height and setback regulations, or any height limitations of the underlying district, no such new or #enlarged building# shall exceed a height equal to the width of the abutting #street# on which it fronts or 100 feet, whichever is less. When the #street walls# of a new #building# or #enlargement# front on two #streets# on a #corner lot#, the height of the #building# shall not exceed the width of the abutting #wide street# or 100 feet, whichever is less.~~

~~However, if the #street wall# of the new or #enlarged building# abuts a contiguous and fully attached existing #building street wall# that exceeds the height permitted above, such new or #enlarged building street wall# may reach the height of the tallest of such abutting building walls if it fronts on a #wide street#, or the lowest of such abutting building walls if it fronts on a #narrow street# provided that, for all such new or #enlarged building street walls#:~~

~~(a) there shall be no penetration of the #sky exposure plane# required by the underlying districts for any portion of such new or #enlarged buildings#; and~~

~~(b) such height does not exceed any height limitation of the underlying district.~~

~~On a #through lot#, for such #development# or #enlargements#, the provisions of paragraphs (b) and (c) in Section 23-532 (Required Rear Yard Equivalents) shall be inapplicable.~~

~~The provisions of this Section shall apply to the #street# frontage of a new or #enlarged building# which is 45 feet or less, and up to a depth of 100 feet from the #street line#.~~

~~A #street wall# of a new #building# or #enlargement# fronting only on a #narrow street#, and abutting two existing #buildings#, shall be no closer to the #street line# than the #street wall# of the abutting #building# that is closest to the #street line#.~~

~~The provisions set forth in this Section shall not apply to any #development# for which a special permit has been granted prior to March 4, 1983, by the Board of Estimate, pursuant to Section 74-95 (Housing Quality Development).~~

~~The provisions set forth in this Section shall not apply to any #building developed# or #enlarged# pursuant to the Quality Housing Program where the width of the #street wall# at the maximum base height specified in the table in Section 23-633 (Street wall location and height and setback regulations in certain districts) is at least 45 feet.~~

In the districts indicated, portions of #buildings# with #street walls# less than 45 feet in width shall not be permitted above the following heights:

(a) For #interior lots#, and for #through lots#, which shall be treated as two separate #interior lots# of equal depth for the purposes of determining the height limitations of this Section, a height equal to the width of the #street# on which such #street walls# front or 100 feet, whichever is less;

(b) For #corner lots# bounded by only #narrow streets#, a height equal to the width of the narrowest of such #streets# on which such #street walls# front;

(c) For #corner lots# bounded by at least one #wide street#, a height equal to the width of the #widest street# on which it fronts, or 100 feet, whichever is less;

(d) Where such #street walls abut# an existing #building# with #street walls# that exceed the height permitted in paragraphs (a), (b) or (c) above, such new #street walls# may reach the height of the tallest of such #abutting# building walls if they front on a #wide street#, or the lowest of such #abutting# building walls if they front on a #narrow street#, provided such new #street walls# are fully contiguous at every level with such #abutting street walls#.

In addition, the following rules shall apply:

(1) The front height and setback regulations and any height limitations of the underlying district shall apply, except that the alternate front setback and tower regulations of Sections 23-64, 23-65, 24-53, 24-54, 33-44 and 33-45 shall not apply. In the event of a conflict between the underlying regulations and the regulations of this Section, the more restrictive shall apply.

(2) The provisions of this Section shall not apply to #street walls# of permitted obstructions or #street walls# located beyond 100 feet of a #street line#.

(3) For the purposes of determining the width of a #street wall#:

(i) the width shall be the sum of the maximum widths of all #street walls# of a #building# at every level. The width of a #street wall# shall be the length of the #street line# from which, when viewed directly from above, lines perpendicular to the #street line# may be drawn to such #street wall#;

(ii) #abutting buildings# on a single #zoning lot# may be considered a single #building#, except as set forth in paragraph (6) of this Section.

(4) For #buildings# with #street walls# less than 45 feet in width that front only on a #narrow street# and #abut# two existing #buildings#, the #street wall# of such #building# shall be no closer to the #street line# than the #street wall# of the #abutting building# that is closest to the #street line#.

(5) On a #through lot# containing #buildings# with #street walls# less than 45 feet in width, the provisions of paragraphs (b) and (c) in Section 23-532 (Required rear yard equivalents) shall not apply.

(6) #Quality Housing buildings# shall be exempt from the provisions of this Section provided the width of the #street wall# at the maximum base height specified in the applicable table in Section 23-633 or 35-24 is at least 45 feet. For such #buildings#, a #street wall# that is less than 45 feet wide may be constructed above such base. For the purposes of this paragraph (6), #abutting buildings# on a single #zoning lot# shall not be considered a single #building#. However, where all the requisite structural framing and all enclosing walls and roofs were completed for an #enlargement#, in accordance with a building permit issued prior to a September 11, 2007 Board of Standards and Appeals (67-07-A) ruling that resulted in the #enlargement# being ineligible for a Certificate of Occupancy, #abutting buildings# on a single #zoning lot# may be considered a single #building# provided such #zoning lot# is formed prior to [six months after date of adoption].

23-693
Special provisions applying adjacent to R1 through R6B Districts

R6 R7 R8 R9 R10

In the districts indicated, the #development# or #enlargement# of a #building#, or portions thereof, within 25 feet of an R1, R2, R3, R4, R5 or R6B District, shall:

(a) not exceed a height of 35 feet where such adjoining district is an R1, R2, R3, R4 or R5 District; and

(b) comply with the height and setback regulations of an R6B District where such adjoining district is an R6B District.

23-70
MINIMUM REQUIRED DISTANCE BETWEEN TWO OR MORE BUILDINGS ON A SINGLE ZONING LOT

23-71
Minimum Distance Between Buildings on a Single Zoning Lot

R1 R2 R3 R4 R5 R6 R7 R8 R9 R10

In all districts, as indicated, the minimum distance between ~~a~~ the portion of a ~~#residential~~ building# containing #residences# and any other #building# on the same #zoning lot# shall be as provided in this Section. For the purposes of this Section, #abutting buildings# on a single #zoning lot# may be considered a single #building#. However, ~~except that~~ these provisions do not apply:

(a) to the extent that such two #buildings# are separated from each other by a #rear yard equivalent# as set forth in Section 23-~~533~~ 532 (Required rear yard equivalents); or

(b) to space between a #single-family# ~~one-family~~, #two-family#, or three-family #residence# and a garage #accessory# thereto.~~; or~~

~~(c) to abutting new #buildings# maintaining a continuous #street wall# with a permitted front~~

~~wall setback not exceeding 10 feet on a #wide street# or 15 feet on a #narrow street# for the entire length of all #street lines# of a #zoning lot# that fronts on a #wide street# in an R10 or equivalent #Commercial District#. In no event shall the depth of such #zoning lot# as measured from the #wide street# exceed 125 feet and its maximum permissible #floor area ratio# exceed 10.0.~~

23-711
Standard minimum distance between buildings

R1 R2 R3 R4 R5 R6 R7 R8 R9 R10

In all districts, as indicated, the required minimum distance between ~~a~~ the portion of a ~~#residential~~ building# containing #dwelling units# and any other #building# on the same #zoning lot# shall vary according to the height of such #buildings# and the presence of #legally required windows# in facing building walls. Such minimum distance shall be, in feet, as indicated in the following table:

	Maximum Building Height above #Base Plane# or #Curb Level#, as Applicable (in feet)				
Wall Condition*	25	35	40	50	Over 50
Wall to Wall	20	25	30	35	40
Wall to Window	30	35	40	45	50
Window to Window	40	45	50	55	60

* Wall condition shall be defined as:

"wall to wall" is a condition where two walls of #buildings# face each other, and neither wall contains a #legally required window#;

"wall to window" is a condition where two walls of #buildings# face each other, and one wall contains a #legally required window# and the other wall does not contain a #legally required window#;

"window to window" is a condition where two walls of #buildings# face each other, and both walls contain a #legally required window#.

In addition, the following rules shall apply:

(a) the minimum distances set forth in this table shall be provided at the closest point between #buildings#;

* * *

(f) in R1, R2, R3, R4A and R4-1 Districts within #lower density growth management areas#, the provisions of this paragraph, (f), shall apply to any #zoning lot# with two or more #buildings# where at least 75 percent of the #floor area# of one #building# is located beyond 50 feet of a #street line# and the #private road# provisions do not apply. For the purposes of this paragraph, any ~~#residential~~ building# containing #residences# with no ~~#residential~~ building# containing #residences# located between it and the #street line# so that lines drawn perpendicular to the #street line# do not intersect any other ~~#residential~~ building# containing #residences# shall be considered a “front building,” and any ~~#residential~~ building# containing #residences# with at least 75 percent or more of its

#floor area# located beyond the #rear wall line#, or prolongation thereof, of a "front building" shall be considered a "rear building." The minimum distances set forth in the table in this Section shall apply, except that a minimum distance of 45 feet shall be provided between any such front and rear #buildings#.

* * *

23-80
COURT REGULATIONS, MINIMUM DISTANCE BETWEEN WINDOWS AND WALLS OR LOT LINES AND OPEN AREA REQUIREMENTS

Definitions and General Provisions

23-81
Definitions

Words in italics are defined in Section 12-10 (DEFINITIONS) or, if applicable exclusively to this Section, in this Section.

Basic Regulations

23-82
Building Walls Regulated by Minimum Spacing Requirements

R1 R2 R3 R4 R5 R6 R7 R8 R9 R10

In all districts, as indicated, at any level at which two portions of a single #building# <u>or #abutting buildings# on a single #zoning lot#</u> are not connected one to the other, such portions shall be deemed to be two separate #buildings#, and the provisions set forth in Section 23-71 (Minimum Distance between Buildings on a Single Zoning Lot) shall apply. In applying such provisions, the height of the two portions shall be measured from the roof of the connecting portion of such #building# instead of from the #base plane# or #curb level#, as applicable.

23-83
Building Walls Regulated by Other than Minimum Spacing Requirements

R1 R2 R3 R4 R5 R6 R7 R8 R9 R10

In all districts, as indicated, to the extent that the provisions of Section 23-82 (Building Walls Regulated by Minimum Spacing Requirements) do not apply, the minimum distance between different walls of the same #building# shall conform to the regulations set forth in the following Sections:

Section 23-84 (Outer Court Regulations)

Section 23-85 (Inner Court Regulations)

Section 23-86 (Minimum Distance between Legally Required Windows and Walls or Lot Lines)

Section 23-87 (Permitted Obstructions in Courts).

<u>For the purposes of these Sections, #abutting buildings# on a single #zoning lot# shall be considered a single #building#.</u>

However, these regulations shall not apply to any #single-# or #two-family detached residence#.

A corner of a #court# may be cut off between walls of the same #building#, provided that the length of the wall of such cut-off does not exceed seven feet.

The Commissioner of Buildings may approve minor recesses, projections and architectural

treatment of the outline of #courts# as long as these variations do not substantially change the depth or width of the #court#.

23-84
Outer Court Regulations

R1 R2 R3 R4 R5 R6 R7 R8 R9 R10

In all districts, as indicated, #outer courts# shall be in compliance with the provisions of this Section.

* * *

23-844
Modification of court and side yard regulations in the area of the former Bellevue South Urban Renewal Plan ~~Area~~ in the Borough of Manhattan

In the Borough of Manhattan, in the area designated by the former Bellevue South Urban Renewal Plan, for a #development# or #enlargement# on a #zoning lot# that adjoins a #zoning lot# including a ~~#residential~~ building# containing #residences# with #non-complying courts# along the common #side lot line#, the #court# regulations of Section 23-80 and the open area requirements of paragraph (c) of Section 23-462 (Side yards for all other residential buildings) may be modified to allow an open area at least eight feet wide to extend along a portion of the #side lot line#.

23-85
Inner Court Regulations

R1 R2 R3 R4 R5 R6 R7 R8 R9 R10

In all districts, as indicated, #inner courts# shall be in compliance with the provisions of this Section.

* * *

23-86
Minimum Distance Between Legally Required Windows and Walls or Lot Lines

R1 R2 R3 R4 R5 R6 R7 R8 R9 R10

In all districts as indicated, the minimum distance between #legally required windows# and walls or #lot lines# shall be as set forth in this Section, except that this Section shall not apply to #legally required windows# in ~~#residential~~ buildings# containing #residences#:

(a) in R2X, R3, R4 or R5A Districts, with a maximum height of 35 feet and with a maximum of three units;

(b) in other districts either:

(1) with a maximum height of 32 feet and with a maximum of three units; or

(2) with three #stories# if the lowest #story# is either a #basement# or is excluded from #floor area# by definition.

For the purposes of this Section, #abutting buildings# on the same #zoning lot# shall be considered a single #building#.

* * *

23-87
Permitted Obstructions in Courts

R1 R2 R3 R4 R5 R6 R7 R8 R9 R10

In all districts, as indicated, the following ~~shall not be considered~~ obstructions shall be permitted ~~when located~~ within the minimum area and dimensions needed to satisfy the requirements for a #court#:

Arbors or trellises;

Eaves, gutters, downspouts, window sills, or similar projections extending into such #court# not more than four inches;

Fences;

Fire escapes in #outer courts#;

Fire escapes in #outer court recesses# not more than five feet in depth;

Fire escapes in #inner courts# where such fire escapes are required as a result of alterations in #buildings# existing before December 15, 1961;

Fire escapes in #outer court recesses# more than five feet in depth where such fire escapes are required as a result of alterations in #buildings# existing before December 15, 1961;

Flag poles;

Open terraces, porches, or steps;

Recreational or drying yard equipment.

23-88
Minimum Distance between Lot Lines and Building Walls

23-881
Minimum distance between lot lines and building walls in lower density growth management areas

In R1, R2, R3, R4A and R4-1 Districts within #lower density growth management areas#, the provisions of this Section shall apply to any #zoning lot# with two or more #buildings#, where at least 75 percent of the #floor area# of one #building# is located beyond 50 feet of a #street line# and the #private road# provisions do not apply. For the purposes of this Section, any ~~#residential~~ building# containing #residences# with no ~~#residential~~ building# containing #residences# located between it and the #street line# so that lines drawn perpendicular to the #street line# do not intersect any other ~~#residential~~ building# containing #residences# shall be considered a "front building," and any ~~#residential~~ building# containing #residences# with at least 75 percent or more of its #floor area# located beyond the #rear wall line#, or prolongation thereof, of a "front building" shall be considered a "rear building". An open area with a minimum width of 15 feet shall be provided between any such "rear building" and the #side lot line# of an adjoining #zoning lot#, and an open area with a minimum width of 30 feet shall be provided between any such "rear building" and the #rear lot line# of an adjoining #zoning lot#. The permitted obstruction provisions of Section 23-44 for #side yards# shall apply where such open areas adjoin a #side lot line#, and the permitted obstruction provisions of Section 23-44 for #rear yards# shall apply where such open areas adjoin a #rear lot line#.

* * *

23-89
Open Area Requirements for Residences ~~in R1 through R5 Districts~~

23-891
In R1 through R5 Districts

R1 R2 R3 R4 R5

In the districts indicated, except R4B and R5B Districts, the provisions of this Section shall apply to all #zoning lots# with two or more #~~residential~~ buildings# or #building segments# containing #residences#. All such #~~residential~~ buildings# or #building segments# shall provide open areas as follows:

(a) An open area shall be provided adjacent to the rear wall of each such #building# or #building segment#. For the purposes of this Section, the "rear wall" shall be the wall opposite the wall of each #building# or #building segment# that faces a #street# or #private road#. The width of such open area shall be equal to the width of each #building# or #building segment#, and the depth of such open area shall be at least 30 feet when measured perpendicular to each rear wall. No such open areas shall serve more than one #building# or #building segment#. Only those obstructions set forth in Section 23-44 shall be allowed, except that parking spaces, whether enclosed or unenclosed, and driveways shall not be permitted within such open areas.

(b) For #buildings# or #building segments# that front upon two or more #streets# or #private roads#, and for #buildings# or #building segments# that do not face a #street# or #private road#, one wall of such #building# or #building segment# shall be designated the rear wall, and the open area provisions of this Section applied adjacent to such wall. However, for not more than one #building# or #building segment# located at the corner of intersecting #streets# or #private roads#, the depth of such required open area may be reduced to 20 feet.

23-892
In R6 through R10 Districts

R6A R6B R7A R7B R7D R7X R8A R8B R8X R9A R9X R10A R10X

(a) In the districts indicated, the entire area of the #zoning lot# between the #street line# and all #street walls# of the #building# and their prolongations shall be planted at ground level, or in raised planting beds that are permanently affixed to the ground, except that such plantings shall not be required at the entrances to and exits from the #building#, ~~or~~ within driveways accessing off-street parking spaces located within, to the side, or rear of such #building#, or between #commercial uses# and the #street line#. No #zoning lot# shall be altered in any way that will either create a new non-compliance or increase the degree of non-compliance with the provisions of this Section.

R6 R7 R8 R9 R10

(b) In the districts indicated without a letter suffix, on #zoning lots# containing a #Quality Housing building#, the entire area of the #zoning lot# between the #street line# and all #street walls# of the #building# and their prolongations shall be planted at ground level, or in raised planting beds that are permanently affixed to the ground, except that such plantings shall not be required at the entrances to and exits from the #building# ~~or~~ within driveways accessing off-street parking spaces located within, to the side, or rear of such #building#, or between #commercial uses# and the #street line#.

23-90
INCLUSIONARY HOUSING

23-91
Definitions

For the purposes of this Section, inclusive, matter in italics is defined either in Section 12-10 (DEFINITIONS) or in this Section.

23-911
General definitions

The following definitions shall apply throughout Section 23-90 (INCLUSIONARY HOUSING), inclusive:

Administering agent

* * *

Compensated development

A "compensated development" is a #development#, an #enlargement# of more than 50 percent of the #floor area# of an existing #building# or, where permitted by the provisions of Section 98-262, a #conversion# of a ~~non-#residential #~~building#, or portion thereof, from non-#residential use# to #dwelling units#, that is located within a #compensated zoning lot#.

* * *

23-95
Compensated Zoning Lots

* * *

23-953
Special floor area compensation provisions in specified areas

(a) Optional provisions for #~~general~~ large-scale general developments# in C4-6 or C5 Districts

Within a #~~general~~ large-scale general development# in a C4-6 or C5 District, the special optional regulations as set forth in this paragraph, (a), inclusive, modify the provisions of Section 23-952 (Floor area compensation in Inclusionary Housing designated areas):

* * *

23-962
Additional requirements for homeownership affordable housing

The additional requirements of this Section shall apply to #homeownership affordable housing# on a #generating site# for the entire #regulatory period#.

(a) Homeowner selection

* * *

(f) Special requirements for #homeownership preservation affordable housing#

The additional requirements in this paragraph, (f), shall apply to #homeownership preservation affordable housing#:

(1) on the #regulatory agreement date#, the #generating site# shall be an existing #~~residential~~ building# containing #residences#;

* * *

Article II
Chapter 4
Bulk Regulations for Community Facilities ~~Facility Buildings~~ in Residence Districts

24-00
APPLICABILITY, GENERAL PURPOSES AND DEFINITIONS

24-01
Applicability of this Chapter

~~The #bulk# regulations of this Chapter apply to any #community facility building# or any #building# used partly for a #community facility use# on any #zoning lot# located in any #Residence District# in which such #building# is permitted. As used in this Chapter, the term "any #building#" shall therefore not include a #residential building#, the #bulk# regulations for which are set forth in Article II, Chapter 3. In addition, the #bulk# regulations of this Chapter, or of specified sections thereof, also apply in other provisions of this Resolution where they are incorporated by cross reference.~~

The #bulk# regulations of this Chapter apply to any #zoning lot# or portion of a #zoning lot# located in any #Residence District# which contains any #community facility building#, or to the #community facility# portion of any #building# located in any #Residence District# which is used for both #residential# and #community facility uses#, except where specifically modified by the provisions of this Chapter.

The #bulk# regulations of Article II, Chapter 3 shall apply to any #zoning lot# or portion of a #zoning lot# in any #Residence District# which contains a #residential building# or to the #residential# portion of any #building# located in any #Residence District# which is used for both #residential# and #community facility uses#, except where specifically modified by the provisions of this Chapter.

In addition, the #bulk# regulations of this Chapter, or of specified sections thereof, also apply in other provisions of this Resolution where they are incorporated by cross reference.

~~When two or more #buildings# on a single #zoning lot# are used in any combination for #community facility uses# and #residential# or other permitted #uses#, the regulations set forth in Sections 24-11 to 24-163, inclusive, relating to Floor Area and Lot Coverage Regulations, shall apply as if such #buildings# were a single #building# used partly for #community facility use#.~~

~~However, in R3A, R3X, R3-1, R4A, R4-1, R4B or R5B Districts, except for #community facility uses# that have received tax-exempt status from the New York City Department of Finance, or its successor, pursuant to Section 420 of the New York State Real Property Tax Law, or its successor, the #bulk# regulations of this Chapter shall apply only to a #building# that is used entirely for #community facility uses# and the #bulk# regulations of Article II, Chapter 3, shall apply to any #building# that is used partly for #community facility use# and partly for #residential use# except as otherwise permitted in Section 24-04 (Modifications of Bulk Regulations in Certain Districts).~~

However, in R3A, R3X, R3-1, R4A, R4-1, R4B or R5B Districts, the #bulk# regulations of this Chapter shall apply only to a #building# that is used entirely for #community facility use#. For a #building that is used partly for #community facility use# and partly for #residential use#, the #bulk# regulations of Article II, Chapter 3, shall apply to all portions of such #building#, except that where:

(a) such #community facility use# has received tax-exempt status from the New York City Department of Finance, or its successor, pursuant to Section 420 of the New York State Real Property Tax Law, or

(b) such #building# has received an authorization pursuant to Section 24-04 (Modifications of Bulk Regulations in Certain Districts)

the #bulk# regulations of Article II, Chapter 4 shall apply to the #community facility# portion of such #building#.

Existing #buildings or other structures# that do not comply with one or more of the applicable #bulk# regulations are #non-complying buildings or other structures# and are subject to the regulations set forth in Article V, Chapter 4.

Special regulations applying to #large-scale community facility developments# or to #community facility uses# in #large-scale residential developments# are set forth in Article VII, Chapter 8.

Special regulations applying only in Special Purpose Districts are set forth in Articles VIII, IX, X, XI and XII.

Special regulations applying in the #waterfront area# are set forth in Article VI, Chapter 2.

24-011
Quality Housing Program

In R6A, R6B, R7A, R7B, R7D, R7X, R8A, R8B, R8X, R9A, R9D, R9X, R10A or R10X Districts, any ~~#residential~~ community facility building# or portion ~~of a #building#~~ thereof shall comply with ~~all of the regulations of Article II, Chapter 8 (Quality Housing Program), and the entire #building# shall comply with~~ the applicable provisions of Article II, Chapter 8. In R5D Districts, certain provisions of Article II, Chapter 8, shall apply as set forth in Section 28-01 (Applicability of this Chapter).

In other R6, R7, R8, R9 or R10 Districts, any #community facility# portion of a #Quality Housing building# shall comply with the applicable provisions of Article II, Chapter 8. ~~the #bulk# regulations applicable to Quality Housing #developments# may, as an alternative, be applied to the #residential# portion of a #building# under the same conditions set forth in Section 23-011, provided that:~~

~~(a) the entire #building# is #developed# pursuant to the #bulk# regulations in Article II, Chapter 4, for #buildings# in which the #residential# portion is #developed#, or #enlarged# where permitted, pursuant to the Quality Housing Program; and~~

~~(b) the entire #building# complies with the applicable provisions of Article II, Chapter 8.~~

~~In R6 or R7 Districts within the study areas set forth in Section 23-011 (Quality Housing Program), the #floor area ratios# and the density requirements applicable to Quality Housing #developments~~buildings~~# shall not apply to any #zoning lot# occupied as of August 14, 1987, by a #single-#, #two-# or three- #family detached# or #semi-detached residence# where 70 percent or more of the aggregate length of the blockfronts in #residential use# on both sides of the #street# facing each other are occupied by such #residences#. For any #development# on such #zoning lot#, the #floor area ratio# and #lot area per room# or #rooming unit# requirement of the underlying district shall apply. On a #narrow street# that intersects with a #wide street#, the 70 percent #residential use# requirement on a #narrow street# shall be measured from a distance of 100 feet from its intersection with a #wide street#.~~

~~**24-012**~~
~~**Harassment**~~

~~Within the Greenpoint-Williamsburg #anti-harassment areas# set forth in Section 23-013, the provisions of Section 23-013 shall apply to any #zoning lot# containing a #building# used partly for a #residential use#.~~

* * *

24-04
Modification of Bulk Regulations in Certain Districts

R3-1 R3A R3X R4-1 R4A R4B R5B

In the districts indicated, for #community facility portions# of #buildings# containing #residential and #community facility uses# that have not received tax-exempt status from the New York City Department of Finance, or its successor, pursuant to Section 420 of the New York State Real Property Tax Law, the City Planning Commission may, upon application, authorize #developments# or #enlargements# pursuant to the #bulk# regulations of this Chapter, provided that the Commission finds that:

(a) the design of the #development# or #enlargement# ensures adequate separation of #uses# and sufficient independent access to each #use#; and

(b) the #floor area# designated for #community facility use# is designed in a manner that is consistent with such #use# and physically distinguishes such space from that designated for #residential use#.

The Commission may prescribe additional safeguards to prevent the #conversion# of such #community facility use# to #residential use#.

Applications for authorizations shall be referred to the affected Community Board for a period of at least 30 days for comment. The City Planning Commission shall grant in whole or in part or deny the application within 60 days of the completion of the Community Board review period.

24-05
Street Tree Planting

R1 R2 R3 R4 R5 R6 R7 R8 R9 R10

In all districts, as indicated, ~~the following~~ #developments#, or #enlargements# that increase the #floor area# on a #zoning lot# by 20 percent or more shall provide #street# trees in accordance with Section 26-41 (Street Tree Planting)~~:~~.

~~(a) #developments#, or #enlargements# that increase the #floor area# on a #zoning lot# by 20 percent or more. However, #street# trees shall not be required for #enlargements# of #single-# or #two-family residences#, except as provided in paragraphs (b) and (c) of this Section;~~

~~(b) #enlargements# of #single-# or #two-family residences# by 20 percent or more within the following special purpose districts:~~

~~#Special Bay Ridge District#;~~

~~#Special Clinton District#;~~

~~#Special Downtown Brooklyn District#;~~

~~#Special Downtown Jamaica District#;~~

~~#Special Grand Concourse District#;~~

~~#Special Hillsides Preservation District#;~~

~~#Special Long Island City Mixed Use District#;~~

~~#Special Ocean Parkway District#;~~

~~#Special South Richmond Development District#;~~

~~(c) #enlargements#, pursuant to the Quality Housing Program, of #single-# or #two-family residences# by 20 percent or more~~

~~(d) conversions of 20 percent or more of the #floor area# of a non-#residential #building# to a #residential use#; or~~

~~(e) construction of a detached garage that is 400 square feet or greater~~.

24-06
Planting Strips

R1 R2 R3 R4 R5

In the districts indicated, ~~the following~~ #developments#, or #enlargements# that increase the #floor area# on a #zoning lot# by 20 percent or more shall provide and maintain a planting strip in accordance with Section 26-42~~:~~.

~~(a) #developments#, or #enlargements# that increase the #floor area# on a #zoning lot# by 20 percent or more. However, planting strips shall not be required for #enlargements# of #single-# or #two-family residences#, except as provided in paragraph (b) of this Section;~~

~~(b) #enlargements# of #single-# or #two-family residences# by 20 percent or more within the following special purpose districts:~~

~~#Special Bay Ridge District#;~~

~~#Special Downtown Jamaica District#;~~

~~#Special Hillsides Preservation District#;~~

~~#Special Ocean Parkway District#;~~

~~#Special South Richmond Development District#;~~

~~(c) conversions of 20 percent or more of the #floor area# of a non-#residential #building# to a #residential use#; or~~

~~(d) construction of a detached garage that is 400 square feet or greater.~~

24-10
FLOOR AREA AND LOT COVERAGE REGULATIONS

24-11
Maximum Floor Area Ratio and Percentage of Lot Coverage

R1 R2 R3 R4 R5 R6 R7 R8 R9 R10

In all districts, as indicated, for any #zoning lot# ~~#community facility building# or any #building# used partly for a #community facility use# on any #zoning lot#~~, the maximum #floor area ratio# and maximum percent of #lot coverage# for a #community facility use# shall not exceed the #floor area ratio# and #lot coverage# set forth in the table in this Section, except as otherwise provided in the following Sections:

Section 24-13 (Floor Area Bonus for Deep Front and Wide Side Yards)

Section 24-14 (Floor Area Bonus for a Public Plaza)

Section 24-15 (Floor Area Bonus for Arcades)

Section 24-17 (Special Provisions for Zoning Lots Divided by District Boundaries).

Any given #lot area# shall be counted only once in determining the #floor area ratio#.

Notwithstanding any other provision of this Resolution, the maximum #floor area ratio# in an R9 or R10 District shall not exceed 12.0.

In R9A, R9D, R9X, R10A and R10X Districts, the bonus provisions of Sections 24-14 (Floor Area Bonus for a Public Plaza) and 24-15 (Floor Area Bonus for Arcades) shall not apply and the maximum #floor area ratio# shall not exceed that set forth in the following table:

MAXIMUM FLOOR AREA AND MAXIMUM LOT COVERAGE
#Lot coverage# (percent of #lot area#)

#Floor Area Ratio#	#Corner Lot#	#Interior Lot# or #Through Lot#	District
1.00	60	55	R1
1.00	60	55	R2
1.00	60	55	R3
2.00	60	55	R4
2.00	60	55	R5 R5A R5B
4.80	70	65	R6
3.00	80	60	R6A
2.00	80	60	R5D R6B
4.80	70	65	R7-1
6.50	70	65	R7-2
4.00	80	65	R7A
3.00	80	65	R7B
4.20	80	65	R7D
5.00	80	70	R7X
6.50	75	65	R8
6.50	80	70	R8A
4.00	80	70	R8B*
6.00	80	70	R8X
10.00	75	65	R9
7.50	80	70	R9A
9.00	80	70	R9D
9.00	80	70	R9X
10.00	75	65	R10
10.00	100	70	R10A R10X

* In R8B Districts, within the boundaries of Community Board 8 in the Borough of

Manhattan, the maximum #floor area ratio# on a #zoning lot# containing #community facility uses# exclusively shall not exceed 5.10.

However, the #floor area ratios# listed in this table shall not apply to #community facility uses# that are subject to the provisions of Section 24-111 (Bulk regulations for certain community facility uses).

Within the boundaries of Community District 7 in the Borough of Manhattan, all ~~#developments# or #enlargements#~~ #zoning lots# in R10 Districts, except R10A or R10X Districts, shall be limited to a maximum #floor area ratio# of 10.0.

In R9 or R10 Districts, the bonus provisions of Sections 24-14 (Floor Area Bonus for a Public Plaza) or 24-15 (Floor Area Bonus for Arcades) shall apply only to a #development# or #enlargement# with 25 percent or less of ~~its~~ the total #floor area# of the #building# in #residential use#.

24-111
Maximum floor area ratio for certain community facility uses

R1 R2

(a) In the districts indicated, for any #zoning lot# containing #community facility uses# other than those #uses# for which a permit is required pursuant to Sections 22-21 (By the Board of Standards and Appeals), 73-12 (Community Facility Uses in R1 or R2 Districts) and 73-13 (Open Uses in R1 or R2 Districts), or where #bulk# modification is authorized pursuant to Section 74-901 (Bulk modifications for certain community facility uses), the maximum #floor area ratio# shall not exceed the #floor area# permitted for #residential uses# by the applicable district regulations. The provisions of this paragraph shall not apply to #buildings# for which plans were filed with the Department of Buildings prior to November 15, 1972, including any subsequent amendments thereof.

R3 R4 R5 R6 R7 R8 R9

(b) In the districts indicated, the maximum #floor area ratio# ~~for any~~ on a #zoning lot# ~~containing~~ for the following #community facility uses# as listed in Use Group 3:

(1) nursing homes, health-related facilities or domiciliary care facilities for adults, each of which have secured certification by the appropriate governmental agency,

(2) sanitariums, or

(3) philanthropic or non-profit institutions with sleeping accommodations, ~~as listed in Use Group 3~~

~~, the allowable #floor area ratio# shall not exceed the maximum #floor area ratio#~~ shall be as set forth in the following table, except where ~~the permissible~~ such #floor area ratio# is modified pursuant to Section 74-902 (Bulk modifications for certain community facility uses).

The provisions of paragraph (b) of this Section are not applicable in R8B Districts in Community Board 8 in the Borough of Manhattan.

MAXIMUM FLOOR AREA RATIO FOR
CERTAIN COMMUNITY ~~FACILITIES~~ FACILITY USES

District	Maximum #Floor Area Ratio# Permitted

R3	0.50
R4	0.75
R5 R5A R5B	1.27
R5D R6B	2.00
R6	2.43
R6A R7B	3.00
R7	3.44
R7D	4.20
R7X	5.00
R7A R8B	4.00
R8 R8A	6.02
R8X	6.00
R9	7.52
R9A	7.50
R9D	9.00
R9X	9.00

* * *

24-12
Height and Application of Lot Coverage

R3 R4 R5 R6 R7 R8 R9 R10

In the districts indicated, ~~any~~ the portion of a #building# containing a #community facility use# located at any height up to but not exceeding 23 feet above #curb level# or #base plane#, where applicable, may be excluded in determining the percentage of #lot coverage# set forth in Section 24-11 (Maximum Floor Area Ratio and Percentage of Lot Coverage). Obstructions permitted under the provisions of Section 24-33 (Permitted Obstructions in Required Yards or Rear Yard Equivalents) shall not be included in #lot coverage#.

* * *

24-162
Maximum floor area ratios and special floor area limitations for zoning lots containing residential and community facility uses in certain districts

R3-2 R4 R5 R6 R7-1

In the districts indicated, except R4A, R4B, R4-1, R5D, R6A and R6B Districts, the provisions of this Section shall apply to any #zoning lot# containing #community facility# and #residential use#.

(a) For #buildings# containing #residential# and #community facility uses#, ~~where such #buildings# have #floor area ratios#~~ if the ratio of #floor area# provided in a #building# to the #lot area# of the #zoning lot# is greater than as set forth in Column A in the ~~following~~ table, then the maximum ratio of #community facility #~~-~~floor area#~~ ratio# for the #community facility# portions of~~ in such #buildings# to the #lot area# of the #zoning lot# shall be as set forth in Column B ~~in~~ of the table~~,~~. ~~and t~~The maximum #floor area ratio# for the #residential# portions of such #buildings# shall be ~~as set forth~~ in accordance

with Article II, Chapter 3, subject to the limitations set forth in paragraph (d) of this Section.

MAXIMUM COMMUNITY FACILITY
FLOOR AREA RATIO FOR CERTAIN BUILDINGS
CONTAINING COMMUNITY FACILITY AND RESIDENTIAL USES

District	COLUMN A	COLUMN B
	Ratio of #Floor Area ~~Ratio~~# of #Building# to #Lot Area# ~~Ratio of~~	Maximum Ratio of #Floor Area ~~Ratio~~# for #Community Facility Use# to #Lot Area#
R3-2	.50	.20
R4	.75	.40
R5B	1.25	.40
R5	1.25	.60
R6	2.50	1.00
R7-1	3.50	1.00

(b) For #buildings# containing #residential# and #community facility uses#, ~~where such #buildings# have #floor area ratios# that do not exceed the applicable~~ if the ratio of #floor area ~~ratios~~# provided in a #building# to the #lot area# of the #zoning lot# is not greater than as set forth in Column A in the table in paragraph (a), then the maximum ~~#floor area~~ ratio# ~~of for~~ the #community facility# ~~portion of~~ #floor area# in such #buildings# to the #lot area# shall be as set forth in Section 24-11, inclusive~~,~~. ~~and t~~The maximum #floor area ratio# for the #residential# portion of such #buildings# shall be ~~as set forth~~ in accordance with Article II, Chapter 3, subject to the limitations set forth in paragraph (d) of this Section.

(c) For #zoning lots# containing multiple #buildings#, the provisions of this paragraph, (c), shall apply to #buildings# containing only #community facility uses# or only #residential uses#. The maximum #floor area ratio# permitted for a #building# containing only #community facility uses# shall be as set forth in Section 24-11, inclusive, and the maximum #floor area ratio# permitted for a #building# containing only #residential uses# shall be as set forth in Article II, Chapter 3, subject to the limitations set forth in paragraph (d) of this Section.

(d) The total #floor area ratio# permitted for #community facility use# on the #zoning lot# shall be as set forth in Section 24-11, inclusive, and the total #floor area ratio# permitted for #residential use# on the #zoning lot# shall be as set forth in Article II, Chapter 3, provided the total of all such #floor area ratios# does not exceed the greatest #floor area ratio# permitted for any such #use# on the #zoning lot#.

For the purposes of this Section, a #building segment# may be considered to be a #building#.

24-163
Open space ratio for residential portion

R1 R2 R3 R4 R5 R6 R7 R8 R9

In the districts indicated, ~~the #residential# portion of the #building#~~ #zoning lots# containing #residences# shall have a minimum #open space ratio# as required under the provisions of Article II, Chapter 3. For the purposes of this Section:

(a) the #floor area# counted in determining the #open space ratio# shall be only that #floor area# in the #residential# portion of the #building#;

(b) the #lot coverage# of the #residential# portion of the #building# shall be deemed to be that portion of the #zoning lot# which, when viewed directly from above, would be covered by the #residential# portion of the #building# at any level; and

(c) the applicable #height factor#, if the maximum permitted #residential floor area ratio# is less than the total #floor area ratio# permitted for such ~~#building#~~ #zoning lot#, shall be the #height factor# of the #residential# portion of the #building#.

24-164
Location of open space for residential portion

R1 R2 R3 R4 R5 R6 R7 R8 R9

(a) In the districts indicated, the #open space# required for the #residential# portion of the #building# under the provisions of Article II, Chapter 3, may be at a level higher than 23 feet above #curb level#. Such #open space# may be provided at ground floor level or upon the roof of the #community facility# portion of such #building#, provided that the level of any #open space# may not be higher than two and one half feet below the sill level of any #legally required window# opening on such roof area, in the #residential# portion of such #building#. #Open space# located on the roof of a ~~separate~~ #community facility building# separated by open area from #residential# or #mixed buildings# on the same #zoning lot# may not be at a level higher than 23 feet above #curb level#. For the purposes of this paragraph (a), #abutting buildings# on a single #zoning lot# may be considered to be a single #building#.

R6A R6B R7A R7B R7D R7X R8A R8B R8X R9A R9D R9X R10A R10X

(b) In the districts indicated, and ~~for #buildings# in which the #residential# portion is #developed#, or #enlarged# where permitted, pursuant to the Quality Housing Program~~ in other R6, R7, R8, R9 or R10 Districts, the provisions of Section 28-30 (RECREATION SPACE AND PLANTING AREAS) shall apply to #Quality Housing buildings#.

24-165
Lot coverage for zoning lots containing community facility and residential uses

Where different maximum percentages of #lot coverage# apply to #residential# and #community facility uses#, the higher #lot coverage# shall be applied to any level containing both such #uses#. Furthermore, the maximum percent of #lot coverage# for #community facility uses# located below the level of #residential uses# need not be lower than the maximum percent of #lot coverage# permitted for such #residential uses#.

24-16~~5~~6
Balconies

R3 R4 R5 R6 R7 R8 R9 R10

In all districts, as indicated, the regulations set forth in Section 23-13 (Balconies) shall apply to ~~the #residential# portion of a #building# used partly for #residential use# and partly for #community facility use# or to~~ any portion of a #building# used for living or sleeping accommodations.

24-17
Special Provisions for Zoning Lots Divided by District Boundaries or Subject to Different Bulk Regulations

R1 R2 R3 R4 R5 R6 R7 R8 R9 R10

In all districts, as indicated, whenever a #zoning lot# is divided by a boundary between districts or is subject to ~~other~~ #bulk# regulations resulting in different maximum #floor area ratios#, ~~different minimum #open space ratios#~~, or different maximum percentages of #lot coverage#, ~~or #open space ratios# and #lot coverages#,~~ on portions of the #zoning lot#, the provisions set forth in Article VII, Chapter 7 shall apply.

* * *

~~**24-21**~~
~~**Special Provisions for Zoning Lots Divided by District Boundaries**~~

~~R1 R2 R3 R4 R5 R6 R7 R8 R9 R10~~

~~In all districts, as indicated, whenever a #zoning lot# is divided by a boundary between districts or is subject to other regulations resulting in different #lot area# requirements on portions of the #zoning lot#, the provisions set forth in Article VII, Chapter 7 shall apply.~~

24-30
YARD REGULATIONS

General Provisions

24-31
Applicability of Yard Regulations

R1 R2 R3 R4 R5 R6 R7 R8 R9 R10

In all districts, as indicated, #yards# shall be provided as set forth in Sections 24-30 (YARD REGULATIONS) and 24-40 (SPECIAL PROVISIONS FOR ZONING LOTS DIVIDED BY DISTRICT BOUNDARIES), inclusive.

For #zoning lots# with #residential# and #community facility uses#, #front yards# shall be provided pursuant to Article II, Chapter 3, where applicable, and #side yards# and #rear yards# shall be provided in accordance with this Chapter. Section 23-463 (Maximum aggregate width of street walls) shall apply to #zoning lots# with #residential# and #community facility uses#.

For the #residential# portion of a #building# with both #residential# and #community facility uses#, the required #residential rear yard# shall be provided at the floor level of the lowest #story# used for #dwelling units# or #rooming units#, where any window of such #dwelling units# or #rooming units# faces onto such #rear yard#.

~~**Level of Yards**~~

~~In all #Residence Districts#, the level of a #yard# or of a #rear yard equivalent# shall not be higher than #curb level#, except that natural grade level need not be disturbed in order to comply with this requirement. No #building or other structure# shall be erected above ground level in any required #yard# or #rear yard equivalent#, except as otherwise provided in Section 24-33 (Permitted Obstructions in Required Yards or Rear Yard Equivalents).~~

24-32
Level of Yards and Measurement of Yard Width or Depth

In all #Residence Districts#, the level of a #yard# or of a #rear yard equivalent# shall not be higher than #curb level#, except that natural grade level need not be disturbed in order to comply with this requirement. No #building or other structure# shall be erected above ground level in any

required #yard# or #rear yard equivalent#, except as otherwise provided in Section 24-33 (Permitted Obstructions in Required Yards or Rear Yard Equivalents).

In all #Residence Districts#, the width or depth of a #yard# or #rear yard equivalent# shall be measured perpendicular to #lot lines#.

24-33
Permitted Obstructions in Required Yards or Rear Yard Equivalents

In all #Residence Districts#, the following ~~shall not be considered~~ obstructions shall be permitted when located within a required #yard# or #rear yard equivalent#:

(a) In any #yard# or #rear yard equivalent#:

Arbors or trellises;

Awnings or canopies;

Chimneys, projecting not more than three feet into, and not exceeding two percent of the area of, the required #yard# or #rear yard equivalent#;

Eaves, gutters or downspouts, projecting into such #yard# or #rear yard equivalent# not more than 16 inches or 20 percent of the width of such #yard# or #rear yard equivalent#, whichever is the lesser distance;

Fences;

Flagpoles;

Parking spaces for automobiles or bicycles, off-street, open, #accessory#;

Steps and ramps for persons with physical disabilities;

Terraces or porches, open;

Walls, not exceeding eight feet in height and not roofed or part of a #building#;

(b) In any #rear yard# or #rear yard equivalent#:

Balconies, unenclosed, subject to the provisions of Section 24-165;

Breezeways;

Any building# or portion of a #building# used for #community facility uses#, including #accessory# parking spaces for bicycles within such #building#, provided that the height of such #building# shall not exceed one #story#, nor in any event 23 feet above #curb level#, and further provided that the area within such #building# dedicated to #accessory# parking spaces for bicycles shall not exceed the area permitted to be excluded from #floor area# pursuant to Section 25-85 (Floor Area Exemption). However, the following shall not be permitted obstructions:

(1) in all #residence districts#, any portion of a #building# containing rooms used for living or sleeping purposes, other than a room in a hospital used for the care or treatment of patients;

(2) in R1, R2, R3A, R3X, R3-1, R4A, R4B or R4-1 Districts, any portion of a #building# used for any #community facility use#;

(3) in all #residence districts# not listed in paragraph (b)(2) of this Section, beyond

one hundred feet of a #wide street#, any portion of a #building# used for a #community facility use# other than a #school#, house of worship, college or university, or hospital and related facilities;

Fire escapes;

Greenhouses, #accessory#, non-commercial, limited to one #story# or 14 feet in height above natural grade level, whichever is less, and limited to an area not exceeding 25 percent of a required #rear yard# or #rear yard equivalent# on a #zoning lot#;

Parking spaces, off-street, #accessory# to a ~~#community facility building# or a #building# used partly for #community facility uses#~~, #community facility use#, provided that the height of an #accessory building#, or portion of a #building# used for such purposes shall not exceed 14 feet above #curb level#. However, such #accessory building# or portion of a #building# shall not be a permitted obstruction in R1, R2, R3A, R3X, R3-1, R4A, R4B or R4-1 Districts;

Recreation or drying yard equipment;

Sheds, tool rooms or other similar #accessory buildings or other structures# for domestic or agricultural storage, with a height not exceeding 10 feet above the level of the #rear yard# or #rear yard equivalent#;

Water-conserving devices required in connection with air conditioning or refrigeration systems in #buildings# existing prior to May 20, 1966, if located not less than 8 feet from any #lot line#.

However, no portion of a #rear yard equivalent# which is also a required #front yard# or required #side yard# may contain any obstructions not permitted in such #front yard# or #side yard#.

* * *

24-35
Minimum Required Side Yards

R1 R2 R3 R4 R5
the #aggregate width of street walls# of a #building# containing #residences#, or for #abutting buildings#, the combined #aggregate width of street walls# of all such #abutting buildings# on a #zoning lot#, shall not exceed the width set forth in the following table:

(a) In the districts indicated, if a #building# ~~used for~~ containing a #community facility use# has an #aggregate width of street walls# equal to 80 feet or less, or, for #abutting buildings#, if the combined #aggregate width of street walls# of all such #abutting buildings# on a #zoning lot# is equal to 80 feet or less, then two #side yards# shall be provided, each with a minimum required width of eight feet. If such #building# or #buildings# have ~~has~~ an #aggregate width of street walls# equal to more than 80 feet, two #side yards# shall be provided, each equal to not less than 10 percent of the #aggregate width of street walls#. The provisions of this paragraph, (a), shall not apply in R5D Districts. In lieu thereof, the #side yard# regulations set forth in Sections 23-461 and 23-462, as applicable, shall apply.

R6 R7 R8 R9 R10

(b) In the districts indicated, no #side yards# are required. However, if any open area extending along a #side lot line# is provided at any level, it shall be at least eight feet wide.

~~10/29/07~~

24-351
Special provisions applying along district boundaries

R6 R7 R8 R9 R10

In the districts indicated, if the boundary of an adjoining R1, R2, R3, R4 or R5 District coincides with a #side lot line# of a #zoning lot#, a #side yard# at least eight feet wide shall be provided along such boundary within the districts indicated. ~~In addition, the requirements for R6B Districts in Section 23-633 (Street wall location and height and setback regulations in certain districts) shall apply to any portion of a #building# located within 25 feet of the boundary of an R1, R2, R3, R4, R5 or R6B District if the #building# that contains such portion is:~~

~~(a) within an R6A, R7A, R7B, R7D, R7X, R8A, R8B, R8X, R9A, R9X, R10A or R10X District; or~~

~~(b) within an R6, R7, R8, R9 or R10 District, without a letter suffix, and any portion of the #zoning lot# is #developed# pursuant to the Quality Housing Program.~~

* * *

24-381
Excepted through lots

R1 R2 R3 R4 R5 R6 R7 R8 R9 R10

(a) In all districts, as indicated, no #rear yard# regulations shall apply to any #through lots# that extend less than 110 feet in maximum depth from #street# to #street#.

R5D R6A R6B R7A R7B R7D R7X R8A R8B R8X R9A R9D R9X R10A R10X

(b) In the districts indicated, <u>for all #buildings# and for #Quality Housing buildings#</u> ~~and~~ in other R6, R7, R8, R9 and R10 Districts ~~where the #residential# portion of a #building# is #developed# or #enlarged# pursuant to the Quality Housing Program~~, no #rear yard# regulations shall apply to any #zoning lot# that includes a #through lot# portion that is contiguous on one side to two #corner lot# portions, and such #zoning lot# occupies the entire #block# frontage of a #street#.

24-382
Required rear yard equivalents

R1 R2 R3 R4 R5 R6 R7 R8 R9 R10

In all districts, as indicated, on any #through lot# 110 feet or more in maximum depth from #street# to #street#, one of the following #rear yard equivalents# shall be provided:

(a) an open area with a minimum depth of 60 feet midway (or within five feet of being midway) between the two #street lines# upon which such #through lot# fronts;

(b) two open areas, each adjoining and extending along the full length of a #street line#, and each with a minimum depth of 30 feet measured from such #street line#, except the depth of such required open area along one #street line# may be decreased provided that:

(1) a corresponding increase in the depth of the open area along the other #street line# is made; and

(2) any required front setback areas are maintained; or

(c) an open area adjoining and extending along the full length of each #side lot line#, with a minimum width of 30 feet measured from each such #side lot line#.

However, in R5D, R6A, R6B, R7A, R7B, R7D, R7X, R8A, R8B, R8X, R9A, R9D, R9X, R10A and R10X Districts, and <u>for #Quality Housing buildings#</u> in other R6 through R10 Districts

~~where the #residential# portion of a #building# is #developed# or #enlarged# pursuant to the Quality Housing Program~~, on any #through lot# at least 180 feet in depth from #street to street#, a #rear yard equivalent# shall be provided only as set forth in paragraph (a) of this Section.

Any such #rear yard equivalent# shall be unobstructed from its lowest level to the sky, except as provided in Section 24-33 (Permitted Obstructions in Required Yards or Rear Yard Equivalents).

* * *

24-50
HEIGHT AND SETBACK REGULATIONS

~~9/9/04~~

24-51
Permitted Obstructions

In all #Residence Districts#, the following ~~shall not be considered~~ obstructions shall be permitted and may thus penetrate a maximum height limit or ~~#front# or #rear~~ #sky exposure planes# set forth in Sections 24-52 (Maximum Height of Walls and Required Setbacks), 24-53 (Alternate Front Setbacks) or 24-591 (Limited Height Districts):

(a) Balconies, unenclosed, subject to the provisions of Section 24-165;

(b) Chimneys or flues, with a total width not exceeding 10 percent of the #aggregate width of street walls# of a #building# at any level;

(c) Elevator or stair bulkheads, roof water tanks or cooling towers (including enclosures), each having an #aggregate width of street walls# equal to not more than 30 feet. However, the product, in square feet, of the #aggregate width of street walls# of such obstructions facing each #street# frontage, times their average height, in feet, shall not exceed a figure equal to four times the width, in feet, of the #street wall# of the #building# facing such frontage. For the purposes of this paragraph (c), #abutting buildings# on a single #zoning lot# may be considered to be a single #building#;

(d) Flagpoles or aerials;

(e) House of worship towers, ornamental, having no #floor area# in portion of tower penetrating such height limit or #sky exposure plane#;

(f) Parapet walls, not more than four feet high;

(g) Spires or belfries;

(h) Wire, chain link or other transparent fences.

(i) Building columns having an aggregate width equal to not more than 20 percent of the #aggregate width of street walls# of a #building# are a permitted obstruction, to a depth not exceeding 12 inches, in an #initial setback distance#, optional front open area, or any other required setback distance or open area set forth in Sections 24-52, 24-53, or 24-54 (Tower Regulations).

* * *

24-522
Front setbacks in districts where front yards are not required

R6 R7 R8 R9 R10

(a) In the districts indicated, except for #Quality Housing buildings#, and except as set forth in paragraph (b) of this Section 24-522, ~~where #front yards# are not required~~, if the front

wall or other portion of a #building or other structure# is located at the #street line# or within the #initial setback distance# set forth in the following table, the height of such front wall or other portion of a #building or other structure# shall not exceed the maximum height above #curb level# set forth in the table. Above such specified maximum height and beyond the #initial setback distance#, the #building or other structure# shall not penetrate the #sky exposure plane# set forth in the table:

MAXIMUM HEIGHT OF FRONT WALL
AND REQUIRED FRONT SETBACKS

#Initial Setback Distance# (in feet)		Maximum Height of a Front Wall or other portion of a #Building or other structure# within the #Initial Setback Distance#	#Sky Exposure Plane#				
				Slope over #Zoning Lot# (expressed as a ratio of vertical distance to horizontal distance)			
				On #Narrow Street#		On #Wide Street#	
On #Narrow Street#	On #Wide Street#		Height above #Street Line# (in feet)	Vertical Distance	Horizontal Distance	Vertical Distance	Horizontal Distance
R6 or R7 Districts							
20	15	60 feet or six #stories#, whichever is less	60	2.7	to 1	5.6	to 1
R8, R9 or R10 Districts							
20	15	85 feet or nine #stories#, whichever is less	85	2.7	to 1	5.6	to 1

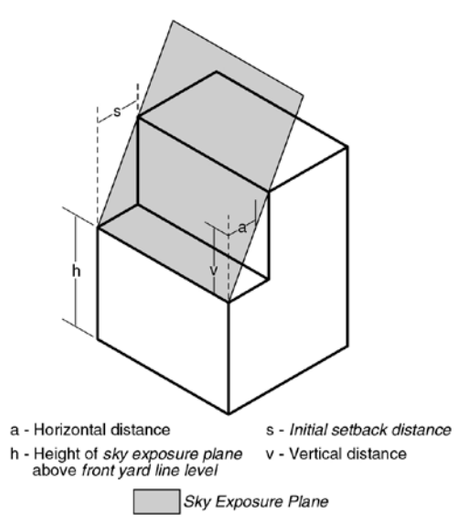

SKY EXPOSURE PLANE
R6, R7, R8, R9, R10 Districts

~~However, where the #residential# portion of any #building# is #developed# or #enlarged# pursuant to the Quality Housing Program, the provisions of this Section, Section 24-53 (Alternate Front Setbacks) and Section 24-54 (Tower Regulations) shall not apply. In lieu thereof, the provisions of Section 23-60 (HEIGHT AND SETBACK REGULATIONS) shall apply.~~

R6A R6B R7A R7B R7D R7X R8A R8B R8X R9A R9D R9X R10A R10X

(b) In the districts indicated, for ~~any #development# or #enlargement#~~ all #buildings or other structures#, the provisions of this Section, Section 24-53 (Alternate Front Setbacks) and Section 24-54 (Tower Regulations) shall not apply. In lieu thereof, the provisions of Section ~~23-60 (HEIGHT AND SETBACK REGULATIONS)~~ 23-633 (Street wall location and height and setback regulations in certain districts) shall apply.

24-523
Special height and setback regulations

(a) Community District 7, Manhattan

Within the boundaries of Community District 7 in the Borough of Manhattan, all ~~#developments# or #enlargements#~~ #buildings or other structures# located in R10 Districts, except R10A or R10X Districts, shall comply with the requirements of Section 23-634 (Special height and setback regulations in R10 Districts within Community District 7, Borough of Manhattan).

(b) R5D Districts

In R5D Districts, all ~~#developments# or #enlargements#~~ #buildings or other structures# shall comply with the height and setback requirements set forth in Section 23-60 (HEIGHT AND SETBACK REGULATIONS).

24-53
Alternate Front Setbacks

R6 R7 R8 R9 R10

(a) In the districts indicated, except for #Quality Housing buildings#, and except as set forth in paragraph (b) of this Section 24-53, if an open area is provided along the full length of the #front lot line# with the minimum depth set forth in the following table, the provisions of Section 24-52 (Maximum Height of Walls and Required Setbacks) shall not apply. The minimum depth of such an open area shall be measured perpendicular to the #front lot line#. However, in such instances, except as otherwise provided in Sections 24-51 (Permitted Obstructions) or 24-54 (Tower Regulations), no #building or other structure# shall penetrate the alternate #sky exposure plane# set forth in the table, and the #sky exposure plane# shall be measured from a point above the #street line#.

If the open area provided under the terms of this Section is a #public plaza#, such open area may be counted for the bonus provided for a #public plaza# in the districts indicated in Section 24-14 (Floor Area Bonus for a Public Plaza).

In R9 or R10 Districts, the provisions of this Section shall be inapplicable to any #development# or #enlargement# with more than 25 percent of ~~its~~ the total #floor area# of the #building# in #residential use#.

ALTERNATE REQUIRED FRONT SETBACKS

Depth of Optional Front Open Area (in feet)		Height above #Street Line# (in feet)	Alternate #Sky Exposure Plane# — Slope over #Zoning Lot# (expressed as a ratio of vertical distance to horizontal distance)			
			On #Narrow Street#		On #Wide Street#	
On #Narrow Street#	On #Wide Street#		Vertical Distance	Hori-zontal Distance	Vertical Distance	Hori-zontal Distance
R6 or R7 Districts						
15	10	60	3.7	to 1	7.6	to 1
R8 R9 R10 Districts						
15	10	85	3.7	to 1	7.6	to 1

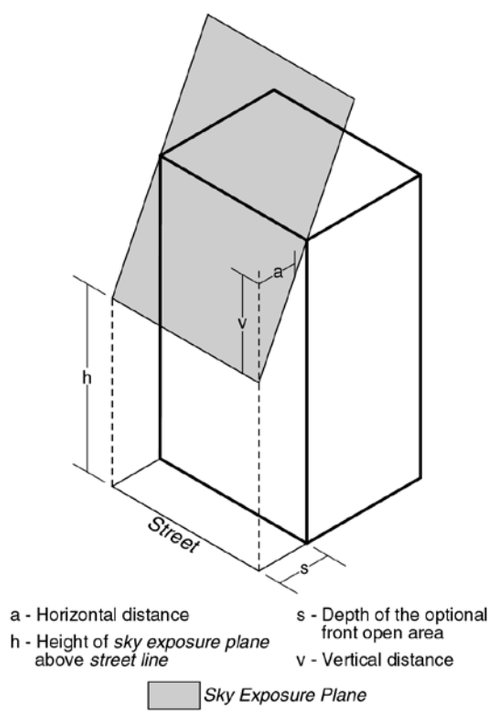

ALTERNATE SKY EXPOSURE PLANE
R6 R7 R8 R9 R10 Districts

R6A R6B R7A R7B R7D R7X R8A R8B R8X R9A R9D R9X R10A R10X

(b) In the districts indicated, for all #buildings or other structures#, the provisions of this Section 24-53 shall not apply.

24-54
Tower Regulations

R7-2 R8 R9 R10

(a) In the districts indicated, except for #Quality Housing buildings#, and except as set forth in paragraph (b) of this Section 24-54, ~~except as set forth herein,~~ any ~~#building# or #buildings#~~ portion or portions of #buildings# ~~thereof~~ which in the aggregate occupy not more than 40 percent of the #lot area# of a #zoning lot# or, for #zoning lots# of less than 20,000 square feet, the percentage set forth in ~~Section 24-541 (Towers on small lots),~~ the table below may penetrate an established #sky exposure plane# in accordance with the provisions of this Section. (Such ~~#building# or~~ portion of a #building# that penetrates a #sky exposure plane# ~~thereof~~ is hereinafter referred to as a tower.)

LOT COVERAGE OF TOWERS
ON SMALL ZONING LOTS

Area of #Zoning Lot# (in square feet)	Maximum Percent of #Lot Coverage#
10,500 or less	50
10,501 to 11,500	49
11,501 to 12,500	48
12,501 to 13,500	47
13,501 to 14,500	46
14,501 to 15,500	45
15,501 to 16,500	44
16,501 to 17,500	43
17,501 to 18,500	42
18,501 to 19,999	41

#Buildings developed# or #enlarged# with towers shall comply with either tower-on-a-base regulations or standard tower regulations as follows:

(1) Applicability of tower-on-a-base regulations

The tower-on-a-base regulations of Section 23-651 shall apply in R9 and R10 Districts to any such #building# that:

(i) is located on a #zoning lot# that fronts upon a #wide street# and is either within 125 feet from such #wide street# frontage along the short dimension of the #block# or within 100 feet from such #wide street# frontage along the long dimension of the #block#; and

(ii) contains more than 25 percent of its total #floor area# in #residential use#.

If a portion of such #building# is #developed# or #enlarged# as a #tower# the entire #zoning lot# shall comply with the provisions of Section 23-651.

(2) Applicability of standard tower regulations

(i) In R7-2 and R8 Districts, the standard tower regulations of Section 23-652 shall apply only to #buildings developed# or #enlarged# as towers, where such towers are comprised, at every level, of only #community facility uses#.

(ii) In R9 and R10 Districts, the standard tower regulations of Section 23-652 shall apply to any #building developed# or #enlarged# as a tower that does not meet the location and #floor area# criteria of paragraph (1) of this

Section 24-54.

(b) Inapplicability of tower regulations

(1) R7-2 R8 R9 R10

In the districts indicated, the provisions of this Section shall not apply to any #development# or #enlargement# located wholly or partly in a #Residence District# that is within 100 feet of a #public park# with an area of one acre or more, or a #street line# opposite such a #public park#.

(2) R8A R8B R8X R9A R9D R9X R10A R10X

In the districts indicated, for all #buildings or other structures#, the provisions of this Section 24-54 shall not apply.

~~At all levels, such tower shall be located not less than 15 feet from the #street line# of a #narrow street#, and not less than 10 feet from the #street line# of a #wide street#.~~

~~Unenclosed balconies, subject to the provisions of Section 24-165 (Balconies in R3 through R10 Districts), are permitted to project into, or over, open areas not occupied by towers.~~

~~The provisions of this Section shall not apply to any #building# located wholly or partly in a #Residence District# that is within 100 feet of a #public park# with an area of one acre or more, or a #street line# opposite such a #public park#.~~

~~However, in R9 or R10 Districts, the provisions of Section 23-652 (Tower-on-a-base) shall apply to any #development# or #enlargement# that:~~

~~(a) is located on a #wide street# and either within 125 feet from such #wide street# frontage along the short dimension of the #block#, or within 100 feet from such #wide street# frontage along the long dimension of the #block#; and~~

~~(b) contains less than 75 percent of its total #floor area# in #community facility use#.~~

~~24-541~~
~~Towers on small lots~~

~~R7-2 R8 R9 R10~~

~~In the districts indicated, a tower may occupy the percent of the #lot area# of a #zoning lot# set forth in the following table:~~

~~LOT COVERAGE OF TOWERS~~
~~ON SMALL ZONING LOTS~~

~~Area of #Zoning Lot# (in square feet)~~	~~Maximum Percent of #Lot Coverage#~~
~~10,500 or less~~	~~50~~
~~10,501 to 11,500~~	~~49~~
~~11,501 to 12,500~~	~~48~~
~~12,501 to 13,500~~	~~47~~
~~13,501 to 14,500~~	~~46~~
~~14,501 to 15,500~~	~~45~~

~~15,501 to 16,500~~	~~44~~
~~16,501 to 17,500~~	~~43~~
~~17,501 to 18,500~~	~~42~~
~~18,501 to 19,999~~	~~41~~

* * *

24-551
Required side setbacks for tall buildings in low bulk districts

R1 R2 R3 R4 R5

In the districts indicated, except R5D Districts, no #community facility# portion of any #building# that is more than 35 feet or more than three #stories# above the level of a #side yard#, whichever is lower, shall be nearer to a #side lot line# bounding such #yard# than a distance equal to one-half the height above yard level of such portion of the #building#.

The following are permitted to project into any open area required under the provisions of this Section:

(a) parapet walls, not more than four feet high; and

(b) chimneys or flues, with a total width not exceeding 10 percent of the width of the building's walls facing such open area.

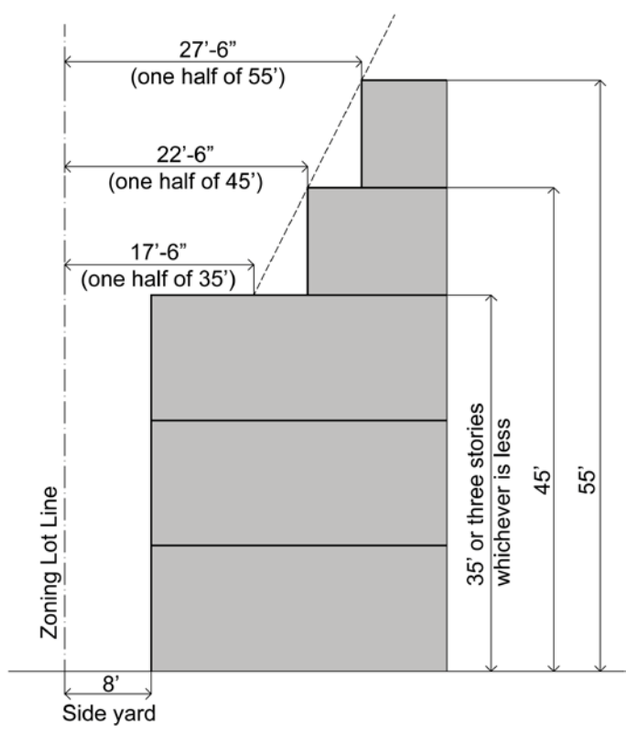

SIDE SETBACK REQUIREMENT

24-552
Required rear setbacks for tall buildings

R1 R2 R3 R4 R5 R6 R7 R8 R9 R10

(a) In all districts, as indicated, except as provided in paragraph (b) of this Section, no portion of a #building# more than 125 feet above yard level shall be nearer to a #rear yard line# than 20 feet. However, this provision shall not apply to any portion of a #building#

that qualifies as a tower under the provisions of Section 24-54 (Tower Regulations).

In the case of a #through lot# on which a #rear yard equivalent# is provided as set forth in paragraph (a) of Section 24-382 (Required rear yard equivalents), the requirements of this Section shall apply as if such #rear yard equivalent# were two adjoining #rear yards#. If a #rear yard equivalent# is provided as set forth in paragraphs (b) or (c) of Section 24-382, the requirements of this Section shall not apply.

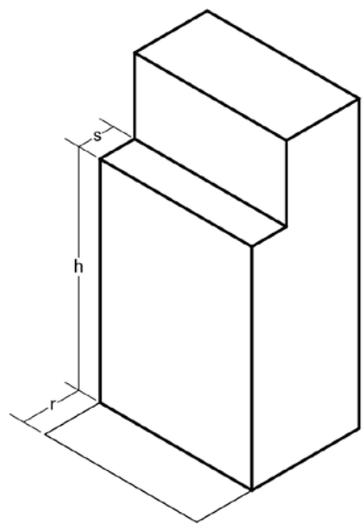

h - Height of wall above *rear yard*
r - Depth of required *rear yard*
s - Depth of required *rear yard* setback

REAR SETBACK FOR TALL BUILDINGS

R6A R6B R7A R7B R7D R7X R8A R8B R8X R9A R9D R9X R10A R10X

(b) In the districts indicated, for all #buildings# and for #Quality Housing buildings# ~~any #development# or #enlargement#, and for #buildings# in which the #residential# portion is #developed# or #enlarged# pursuant to the Quality Housing Program~~ in other R6 through R10 Districts, no portion of a #building# that exceeds the maximum base height specified in the table in Section 23-633 shall be nearer to a #rear yard line# than 10 feet.

In the case of a #through lot# on which a #rear yard equivalent# is provided as set forth in paragraph (a) of Section 24-382, the requirements of this Section shall apply as if such #rear yard equivalent# were two adjoining #rear yards#. If a #rear yard equivalent# is provided as set forth in paragraph (b) of Section 24-382, the requirements of this Section shall not apply.

* * *

24-592
Height limitations for narrow buildings or enlargements

R7-2 R7D R7X R8 R9 R10

In the districts indicated, ~~if the width of the #street wall# of a new #building#, or the #enlarged# portion of an existing #building#, is 45 feet or less,~~ the provisions of Section 23-692 (Height limitations for narrow buildings or enlargements) shall apply to ~~such new or #enlarged building#~~ portions of #buildings# with #street walls# less than 45 feet in width.

24-593
Special provisions applying along district boundaries

R6 R7 R8 R9 R10

In the districts indicated, the requirements for R6B Districts in Section 23-633 (Street wall location and height and setback regulations in certain districts) shall apply to any portion of a #building# located within 25 feet of the boundary of an R1, R2, R3, R4, R5 or R6B District if the #building# that contains such portion is:

(a) within an R6A, R7A, R7B, R7D, R7X, R8A, R8B, R8X, R9A, R9D, R9X, R10A or R10X District; or

(b) within an R6, R7, R8, R9 or R10 District, without a letter suffix, and any portion of the #zoning lot# is #developed# or #enlarged# pursuant to the Quality Housing Program.

24-60
COURT REGULATIONS AND MINIMUM DISTANCE BETWEEN WINDOWS AND WALLS OR LOT LINES

24-61
General Provisions and Applicability

R1 R2 R3 R4 R5 R6 R7 R8 R9 R10

In all districts, as indicated, the provisions set forth in Sections 24-62 to 24-66, inclusive, relating to Court Regulations and Minimum Distance between Windows and Walls or Lot Lines, shall apply only to #community facility buildings# or portions of #buildings# used for #community facility use# containing living accommodations with required windows. For the purposes of these Sections, a required window shall be deemed to be a window or part of a window that:

(a) opens into any room used for living or sleeping purposes, other than a room in a hospital used for the care or treatment of patients; and

(b) is required to provide adequate light or ventilation to such room by any applicable law or statute.

The provisions of Sections 24-62 to 24-66, inclusive, and 24-68 shall apply only to portions of #buildings# at or above the sill level of the lowest required window. For the purposes of these Sections, #abutting buildings# on a single #zoning lot# shall be considered a single #building#.

* * *

24-671
Courts

R1 R2 R3 R4 R5 R6 R7 R8 R9 R10

~~In all districts, as indicated, at any level at which a #building# is used for #residential use#, any #court# upon which a #legally required window# opens shall be subject to the provisions set forth in Sections 23-84 (Outer Court Regulations) or 23-85 (Inner Court Regulations).~~

In all districts, as indicated, at any level at which a #residential# portion of a #building# fronts upon a #court#, the provisions set forth in Section 23-83 (Building Walls Regulated by Other than Minimum Spacing Requirements), shall apply to such #court#.

* * *

24-68

Permitted Obstruction in Courts

R1 R2 R3 R4 R5 R6 R7 R8 R9 R10

In all districts, as indicated, the following ~~shall not be considered~~ obstructions shall be permitted when located within a #court#:

Arbors or trellises;

Eaves, gutters, downspouts, window sills or similar projections extending into such #court# not more than four inches;

Fences;

Fire escapes in #inner courts#, where such fire escapes are required as a result of alterations in #buildings# existing before December 15, 1961;

Fire escapes in #outer courts#;

Fire escapes in #outer court recesses#, not more than five feet in depth;

Fire escapes in #outer court recesses#, more than five feet in depth, where such fire escapes are required as a result of alterations in #buildings# existing before December 15, 1961;

Flagpoles;

Recreational or yard drying equipment;

Terraces, open, porches or steps.

* * *

Article II
Chapter 5
Accessory Off-Street Parking and Loading Regulations

Off-street Parking Regulations

25-00
GENERAL PURPOSES AND DEFINITIONS

* * *

25-022
Applicability of regulations to zoning lots in predominantly built-up areas

~~In the case of #residential development# on #zoning lots#~~ Off-street parking in #predominantly built-up areas#~~, off-street parking~~ shall be provided as set forth in Section 25-23.

* * *

25-025
Applicability of regulations to Quality Housing

On any #zoning lot# containing #residences# in R6A, R6B, R7A, R7B, R7D, R7X, R8A, R8B, R8X, R9A, R9X, R10A or R10X Districts or their #commercial# equivalents, and on any #zoning lot# in other districts containing a #Quality Housing building#, all #accessory# off-street parking spaces shall comply with the provisions of Section 28-50 (PARKING FOR QUALITY HOUSING).

* * *

25-03
Definitions

~~A "group parking facility" is a #building or other structure# or a tract of land, used for the storage of motor vehicles, that contains more than one parking space, has access to the #street# common to all spaces, and if #accessory# to a #residential use#, is designed to serve more than one #dwelling unit#.~~

~~A #group parking facility# shall include, but is not limited to, the following:~~

~~(a) an open parking area;~~

~~(b) parking spaces included within or on the roof of a #building# not primarily used for parking;~~

~~(c) a #building# or #buildings# used primarily for parking, including a group of individual garages.~~

* * *

25-16
Maximum Spaces for Other than Single-Family Detached Residences

R3 R4 R5 R6 R7 R8 R9 R10

In the districts indicated, the provisions of this Section shall apply to all #dwelling units# or #rooming units# in #~~residential~~ buildings# containing #residences# other than #Quality Housing #~~-~~ buildings# and #single-family detached residences#, except as provided in Section 25-17

(Modification of Maximum Spaces for Other than Single-Family Detached Residences).

* * *

25-17
Modification of Maximum Spaces for Other than Single-Family Detached Residences

R3 R4 R5 R6 R7 R8 R9 R10

In the districts indicated, a greater number of off-street parking spaces than permitted under the provisions of Section 25-16 (Maximum Spaces for Other than Single-Family Detached Residences) may be provided if the Commissioner of Buildings determines that:

(a) such additional spaces are needed for ~~residents of the #development~~ the occupants of #residences# to which such spaces are #accessory#, in order to prevent excessive on-street parking; and

(b) such spaces are designed in such a way as to minimize traffic on #streets# with predominantly #residential# frontages.

The Commissioner of Buildings shall establish appropriate additional regulations with respect to the design of the parking areas to minimize adverse effects on the character of surrounding areas.

* * *

25-20
REQUIRED ACCESSORY OFF-STREET PARKING SPACES FOR RESIDENCES

25-21
General Provisions

* * *

25-211
Application of requirements to conversions and certain enlargements

R3 R4

(a) In the districts indicated, except for #zoning lots# in R4 Districts utilizing the special optional regulations of a #predominately built-up area#, wherever additional #dwelling units# are created by #conversions# or #enlargements# of #residential buildings#, there shall be one off-street parking space provided on the #zoning lot# for each such additional #dwelling unit#. Such off-street parking spaces shall be in addition to any existing off-street parking spaces on the #zoning lot# and shall not be located in any common easement driveways or within a #front yard#. The provisions of Section 25-27 (Waiver of Requirements for All Zoning Lots Where Access Would be Forbidden) shall not apply to such #zoning lots#. Furthermore, such additional #dwelling units# shall be permitted only if the #zoning lot# complies with the provisions of Section 25-64 (Restrictions on Use of Open Space for Parking).

R4 R5

(b) In R5 Districts, and for #zoning lots# in R4 Districts utilizing the special optional regulations of a #predominately built-up area#, the requirements of Section 25-21 (General Provisions) shall not apply to additional #dwelling units# created by #conversions# of #residential buildings# on #zoning lots# with less than 5,000 square feet of #lot area#, provided such #buildings# were constructed prior to April 14, 2010, and not subsequently #enlarged#.

R1 R2 R3 R4 R5 R6 R7-1 R7A R7B R7D R7X

(c) In the districts indicated, the requirements of Section 25-21 (General Provisions) shall not apply to #dwelling units# or #rooming units# created by ~~conversions~~ the change of non-#residential uses# to #residential uses# on #zoning lots# with less than 5,000 square feet of #lot area#.

R7-2 R8 R9 R10

(d) In the districts indicated, no #accessory# off-street parking is required for the creation of additional #dwelling units# or #rooming units# within existing #buildings# ~~created by conversions of any kind~~.

* * *

25-22
Requirements Where Individual Parking Facilities Are Provided

R1 R2 R3 R4 R5 R6 R7-1

(a) In the districts indicated, except in R1, R2, R3, R4A and R4-1 Districts within #lower density growth management areas#, where #group parking facilities# are not provided, one #accessory# off-street parking space, open or enclosed, shall be provided for each #dwelling unit#, except in the case of two- or three-family #~~residential buildings~~ residences# in a #predominantly built-up area#, two #accessory# parking spaces per #building# shall be provided.

* * *

25-23
Requirements Where Group Parking Facilities Are Provided

R1 R2 R3 R4 R5 R6 R7 R8 R9 R10

In all districts, as indicated, where #group parking facilities# are provided, for all new #residences# ~~developed under single ownership or control where #group parking facilities# are provided~~, #accessory# off-street parking spaces shall be provided for at least that percentage of the total number of #~~dwelling units~~ residences# set forth in the following table. Such spaces shall be kept available to the residents of the #building# ~~or #development#~~, in accordance with the provisions of Section 25-41 (Purpose of Spaces, and Rental to Non-Residents).

PARKING SPACES REQUIRED WHERE
GROUP PARKING FACILITIES ARE PROVIDED

Percent of Total ~~Dwelling Units~~ #Residences#	District
100*	R1 R2 R3 R4A R4-1
100	R4 R4B R5A
85	R5
70**	R6
66	R5B R5D
60**	R7-1
50**	R6A R6B R7-2 R7A R7B R7D R7X R8B***

40	R8 R9 R10

* In R1, R2, R3, R4A and R4-1 Districts within #lower density growth management areas#, 1.5 #accessory# off-street parking spaces shall be provided for each #dwelling unit#. However, in such districts in the Borough of Staten Island, two #accessory# off-street parking spaces shall be provided for each #single-family residence#, three #accessory# off-street parking spaces shall be provided for each #two-family residence#, and for all other #residences#, #accessory# off-street parking spaces shall be provided for at least 150 percent of the total number of #dwelling units# within such #residences#.

** In R6 or R7 Districts for #residences~~ developed# or #enlarged#~~ created pursuant to the Quality Housing Program, #accessory# off-street parking spaces shall be provided for at least 50 percent of the total number of such ~~#dwelling units~~ residences#.

*** In the borough of Brooklyn, R8B Districts are subject to the parking requirements applicable in R8 Districts.

~~For all new #residences# i~~In a #predominantly built-up area# where #group parking facilities# are provided, #accessory# parking spaces shall be provided for at least that percentage of the total number of #dwelling units# set forth in the following table:

Percent of Total #~~Dwelling Units~~ Residences#	District
66	R4 R5

* * *

25-25
Modification of Requirements for Public, Publicly-Assisted and Government Assisted Housing or for Non-profit Residences for the Elderly

R1 R2 R3 R4 R5 R6 R7 R8 R9 R10

In all districts, as indicated, #accessory# off-street parking spaces shall be provided for at least that percentage of the total number of #dwelling units# in each category as set forth in the following table, for:

(a) all #dwelling units# in publicly-assisted housing developments approved by the City Planning Commission ~~and the Board of Estimate~~ which limit maximum tenant income and receive cash and/or interest subsidies under Federal mortgage programs;

(b) all #dwelling units# in publicly-assisted housing developments approved by the City Planning Commission an~~d the Board of Estimate~~ which limit maximum tenant income and receive rent subsidy contracts under Federal rent subsidy programs, other than such developments owned by or constructed for the New York City Housing Authority which have received "plan" and "project" approval prior to June 30, 1975; and #non-profit residences for the elderly# or #dwelling units# for the elderly;

(c) all #dwelling units# in low rent public housing developments owned by or constructed for the New York City Housing Authority or other public authority and receiving cash subsidies, or #dwelling units# in new housing developments approved by the City Planning Commission ~~and the Board of Estimate~~ that are reserved for low-income tenants for a period of not less than 40 years at rentals equivalent to rentals in low rent public housing developments receiving cash subsidies;

(d) #non-profit residences for the elderly# or #dwelling units# in a publicly-assisted or public housing development that are reserved for elderly tenants for a period of not less than 40

years and that comply with the appropriate space requirements for related #accessory# social and welfare facilities set forth in the definition of a #non-profit residence for the elderly# in Section 12-10 (DEFINITIONS); and

(e) all government assisted #dwelling units# or #rooming units# in developments which receive New York City or New York State assistance to reduce total development cost by $10,000 or 10 percent, whichever is less, and limit maximum tenant income to the income limits established by the United States Department of Housing and Urban Development for New York City mortgagors assisted under Section 235 of the National Housing Act, as amended.

PARKING SPACES REQUIRED FOR PUBLIC, PUBLICLY-ASSISTED AND GOVERNMENT ASSISTED HOUSING DEVELOPMENTS OR NON-PROFIT RESIDENCES FOR THE ELDERLY

Publicly Assisted Housing	Federal Rent Subsidy Programs	Public Housing ~~#Developments#~~ Developments or #Dwelling Units# for Low Income Tenants	#Non-profit Residences for the Elderly# or #Dwelling Units# for the Elderly~~–#~~	Gov't Assisted Housing	District
80	65	50.0	***	80	R1 R2
80	65	50.0	35.0	80	R3 R4
70	56	42.5	31.5	70	R5
55	45	35.0	22.5	55	R5D R6**
39	32	25.0	16.0	35	R6A R6B R7B
45	38	30.0	20.0	45	R7-1**
30	23	15.0	12.5	25	R7-2 R7A R7D R7X R8B*
30	21	12.0	10.0	25	R8 R8A R8X R9 R10

* In the Borough of Brooklyn, R8B Districts are subject to the parking requirements applicable in R8 Districts.

** For assisted housing projects in R6 or R7-1 Districts which are #Quality Housing buildings#~~#developed# or #enlarged#, where permitted, pursuant to the Quality Housing Program in R6 or R7-1 Districts~~, the applicable district parking requirements shall be as follows:

District	Applicable District Parking Requirement
R6	R6A
R7-1	R7A

*** A #non-profit residence for the elderly# is not a permitted #use# in R1 or R2 Districts. See Section 22-12 (Use Group 2).

* * *

25-262
For conversions

R6 R7-1 R7A R7B R7D R7X

In the districts indicated, for ~~conversions of any kind in #buildings#, or portions thereof, which result in~~ the creation of additional #dwelling units# or #rooming units# within existing #buildings#, the maximum number of #accessory# off-street parking spaces for which requirements are waived is 20 spaces. However, the Board of Standards and Appeals may waive requirements for a greater number of spaces in accordance with the provisions of Section 73-46 (Waiver of Requirements for Conversions).

* * *

25-30
REQUIRED ACCESSORY OFF-STREET PARKING SPACES FOR PERMITTED NON-RESIDENTIAL USES

25-31
General Provisions

R1 R2 R3 R4 R5 R6 R7 R8 R9 R10

In all districts, as indicated, #accessory# off-street parking spaces, open or enclosed, shall be provided in conformity with the requirements set forth in the table at the end of this Section for all ~~new~~ #development# after December 15, 1961 for the #uses# listed in the table. In addition, all other applicable requirements of this Chapter shall apply as a condition precedent to the #use# of such #development#.

After December 15, 1961, if an #enlargement# results in a net increase in the #floor area# or other applicable unit of measurement specified in the table in this Section, the same requirements set forth in the table shall apply to such net increase in the #floor area# or other specified unit of measurement.

A parking space is required for a portion of a unit of measurement one-half or more of the amount set forth in the table.

For the purposes of this Section, a tract of land on which a group of such #uses# is #developed# under single ownership or control shall be considered a single #zoning lot#.

For those #uses# for which rated capacity is specified as the unit of measurement, the Commissioner of Buildings shall determine the rated capacity as the number of persons which may be accommodated by such #uses#.

~~After December 15, 1961, if an #enlargement# results in a net increase in the #floor area# or other applicable unit of measurement specified in the table in this Section, the same requirements set forth in the table shall apply to such net increase in the #floor area# or other specified unit of measurement.~~

* * *

25-40
RESTRICTIONS ON OPERATION OF ACCESSORY OFF-STREET PARKING SPACES

* * *

25-431
Limited repairs or motor fuel sales permitted in specified districts

R3 R4 R5 R6 R7 R8 R9 R10

In the districts indicated, within a #completely enclosed# garage, #detached# from a ~~#residential~~ building# containing #residences# and containing not less than 150 #accessory# off-street parking spaces, minor automotive repairs (not including body work) are permitted, and not more than three motor fuel pumps may be provided. However, no motor fuel shall be sold to persons who are not using the parking spaces.

25-50
RESTRICTIONS ON LOCATION OF ACCESSORY OFF-STREET PARKING SPACES

* * *

25-60
ADDITIONAL REGULATIONS FOR PERMITTED OR REQUIRED ACCESSORY OFF-STREET PARKING SPACES

25-61
General Provisions

R1 R2 R3 R4 R5 R6 R7 R8 R9 R10

In all districts, as indicated, all permitted or required #accessory# off-street parking spaces shall conform to the provisions of the following Sections:

Section 25-62 (Size of Spaces)

* * *

25-62
Size and ~~l~~ Location of Spaces

R1 R2 R3 R4 R5 R6 R7 R8 R9 R10

In all districts, as indicated, for all #accessory# off-street parking spaces, open or enclosed, each 300 square feet of unobstructed standing or maneuvering area shall be considered one parking space. However, an area of less than 300 square feet, but in no event less than 200 square feet, may be considered as one space, where the layout and design of the parking area are adequate to permit convenient access and maneuvering in accordance with regulations promulgated by the Commissioner of Buildings, or where the developer or applicant for a building permit or certificate of occupancy certifies that such spaces will be fully attended.

* * *

25-621
Location of parking spaces in certain districts

All #accessory# off-street parking spaces on #zoning lots# with #buildings# containing #residences# shall be located in accordance with the provisions of this Section, except that in R1, R2, R3, R4A and R4-1 Districts within #lower density growth management areas#, the provisions of Section 25-622 shall apply. In addition, all such parking spaces shall be subject to the curb cut requirements of Section 25-63 (Location of Access to the Street).

R1 R2 R3A R3X R3-1 R4A R4-1 R5A

(a) In the districts indicated, #accessory# off-street parking spaces shall be located within or to the side or rear of #buildings# containing #residences#. #Accessory# parking spaces may also be located between the #street line# and #street wall# of such #buildings# and their prolongations only where such spaces are located in a driveway that accesses at least one parking space located to the side or rear of such #building# and no portion of such driveway is located in front of such #buildings#.

However, such parking spaces may also be located in a driveway directly in front of a garage, where such garage is within:

(1) a #semi-detached building# in an R3-1 or R4-1 district, or

(2) a #detached building# on a #zoning lot# with at least 35 feet of frontage along the #street# accessing such driveway, and at least 18 feet of uninterrupted curb space along such #street

No parking spaces of any kind shall be allowed between the #street line# and #street wall# of an #attached building# or #semi-detached building# in an R1, R2, R3A, R3X, R4A or R5A District, or for an #attached building# ~~or #semi-detached building# #abutting# an #attached building#~~ in an R3-1 or R4-1 District.

* * *

25-623
~~Location of parking spaces~~ Maneuverability standards for community facility uses

R1 R2 R3 R4 R5 R6 R7 R8 R9 R10

In all districts, as indicated, the provisions of this Section shall apply to ~~all #developments# and #enlargements# that provide an open parking area #accessory# to #community facility uses#. All such #developments# and #enlargements# shall submit a site plan to the Department of Buildings showing the location of all parking spaces, curb cuts and compliance with the maneuverability standards, as set forth in paragraphs (b) and (c) of Section 36-58.~~

~~For the purposes of this Section, #developments# and #enlargements# shall be defined as follows~~:

(a) #developments# with #accessory# open parking areas ~~shall only include those~~ in which 70 percent or more of the #floor area# on the #zoning lot# is occupied by a #community facility use#; ~~and~~

(b) #enlargements# ~~shall include only those~~ of a #building# with #accessory# open parking areas or the #enlargement# of an open parking area that result in:

(1) an increase in the ~~a~~ total number of parking spaces #accessory# to #community facility uses# on the #zoning lot# that is at least 20 percent greater than the number of such spaces existing on November 28, 2007; or

(2) an increase in the ~~a~~ total amount of #floor area# on the #zoning lot# that is at least 20 percent greater than the amount of #floor area# existing on November 28, 2007, and where at least 70 percent of the #floor area# on the #zoning lot# is occupied by #community facility uses#~~.~~; and

(c) existing #buildings# with new #accessory# open parking areas in which 70 percent or more of the #floor area# on the #zoning lot# is occupied by a #commercial# or #community facility use#.

The provisions of this Section shall not apply to surface parking located on the roof of a #building#, indoor parking garages, #public parking garages#, structured parking facilities, or #developments# or #enlargements# in which at least 70 percent of the #floor area# or #lot area#

on a #zoning lot# is used for automotive #uses# listed in Use Groups 9 or 16.

For the purposes of this Section, an "open parking area" shall mean that portion of a #zoning lot# used for the parking or maneuvering of vehicles, including service vehicles, which is not covered by a #building#. Open parking areas shall also include all required landscaped areas within and adjacent to the open parking area.

For all such new or #enlarged# open parking areas, a site plan shall be submitted to the Department of Buildings showing the location of all parking spaces, curb cuts and compliance with the maneuverability standards, as set forth in paragraphs (b) and (c) of Section 36-58.

* * *

25-631
Location and width of curb cuts in certain districts

All curb cuts on #zoning lots# with #buildings# containing #residences# shall comply with the provisions of this Section, except that in #lower density growth management areas#, the provisions of Section 25-632 shall apply. The minimum width of a curb cut shall be eight feet, including splays. In addition, for #non-conforming buildings# in all districts, the provisions of Section 25-633 (Curb cut restrictions for certain buildings in R1 through R5 districts) shall apply.

R2A

(a) In R2A Districts, the maximum width of a curb cut shall be 18 feet, and the maximum width of a driveway within a #front yard# shall be 20 feet. All #zoning lots# shall maintain at least 18 feet of uninterrupted curb space along each #street# frontage.

R2X R3 R4 R5

(b) In the districts indicated, except R4B and R5B Districts, curb cuts shall comply with the following provisions:

(1) For #zoning lots# containing #residences# where not more than two #accessory# parking spaces are required:

(i) for #zoning lots# with less than 50 feet of frontage along a #street#, only one curb cut, having a maximum width, including splays, of ten feet, shall be permitted.

(ii) for #zoning lots# with at least 50 feet of frontage along a #street#, no more than two curb cuts shall be permitted along such #street# frontage. If one curb cut is provided, such curb cut shall have a maximum width, including splays, of 18 feet. If two curb cuts are provided, the maximum width of each curb cut, including splays, shall be ten feet, and a minimum distance of 30 feet of uninterrupted curb space shall be provided between such curb cuts;

(iii) wherever #accessory# parking spaces are provided in adjacent #side lot ribbons# on #zoning lots# subdivided after June 30, 1989, the curb cuts giving access to such #side lot ribbons# shall be contiguous (paired), so that only one curb cut, having a maximum width of 18 feet, including splays, shall serve both #side lot ribbons#; and

(iv) a minimum distance of 16 feet of uninterrupted curb space shall be maintained between all curb cuts constructed after June 30, 1989, provided that this requirement shall not apply to #zoning lots# existing both on June 30, 1989 and (effective date of amendment) that are less than 40 feet wide and where at least 16 feet of uninterrupted curb space is maintained along

the #street# in front of the #zoning lot#.

(2) For #zoning lots# containing #residences# where more than two #accessory# parking spaces are required:

(i) #zoning lots# with 35 feet or more of frontage along a #street# shall maintain a minimum distance of 16 feet of uninterrupted curb space along such #street#;

(ii) a minimum distance of 16 feet of uninterrupted curb space shall be maintained between all curb cuts constructed after June 30, 1989, provided that this requirement shall not apply to any #zoning lot# existing both on June 30, 1989 and (effective date of amendment) that is less than 40 feet wide and where at least 16 feet of uninterrupted curb space is maintained in front of such #zoning lot# along the #street#;

(iii) all driveways shall be located at least 13 feet from any other driveway on the same or adjoining #zoning lots#. However, driveways may be paired with other driveways on the same or adjoining #zoning lots#, provided the aggregate width of such paired driveways, including any space between them, does not exceed 20 feet. Curb cuts accessing such paired driveway shall have a minimum width of 15 feet and a maximum width, including splays, of 18 feet;

(iv) except for paired driveways as set forth in paragraph (b) (2) (iii) of this Section, the maximum width of a curb cut accessing less than 50 parking spaces shall be 12 feet, including splays, and the maximum width of a curb cut accessing more than 50 parking spaces shall be 22 feet, including splays. However, where Fire Department regulations set forth in the Administrative Code of the City of New York require curb cuts of greater width, such curb cuts may be increased to the minimum width acceptable to the Fire Department.

R4B R5B

(c) In the districts indicated, curb cuts are permitted only on #zoning lots# with at least 40 feet of #street# frontage and existing on the effective date of establishing such districts on the #zoning maps#. <u>Any such #zoning lot# may be subdivided, however curb cuts are permitted only for a resulting subdivided #zoning lot# that has at least 40 feet of #street# frontage.</u> For #detached#, #semi-detached# and #zero lot line buildings#, the width and location of curb cuts shall be in accordance with paragraph (b)(1), inclusive, of this Section. For #attached buildings# and #building segments#, and for multiple dwellings in R5B Districts, at least 34 feet of uninterrupted curb space shall be maintained between all curb cuts constructed after June 30, 1989, provided that this requirement shall not apply to #zoning lots# existing on both June 30, 1989 and April 14, 2010, that are less than 76 feet wide and where at least 34 feet of uninterrupted curb space is maintained along the #street# in front of the #zoning lot#.

For #zoning lots# with less than 40 feet of #street# frontage and existing on the effective date of establishing such districts on the #zoning maps, curb cuts shall be prohibited.

R6 R7 R8

(d) In the districts indicated without a letter suffix, for #zoning lots# containing non-#Quality Housing buildings# or non-#Quality Housing building segments#, each of which contains not more than three #dwelling units#, #accessory# off-street parking spaces shall be located in accordance with the provisions of paragraph (b)(2), inclusive, of this Section.

R6 R7 R8

(e) In the districts indicated, except as provided in paragraph (d) of this Section, only one curb cut, having a maximum width of 12 feet, including splays, shall be permitted on any #street# frontage of a #zoning lot#. However, where a curb cut accesses a #group parking facility# with 50 or more spaces, the maximum width of a curb cut shall be 22 feet, including splays, or alternatively, two curb cuts shall be permitted to access such #group parking facility#, each with a maximum width of 12 feet, including splays, and spaced at least 60 feet apart. For #zoning lots# subdivided after (the effective date of amendment), curb cuts shall only be permitted along the #street# frontage of such subdivided #zoning lot# where at least 34 feet of uninterrupted curb space is maintained, and shall comply with the width and spacing requirements of this paragraph (e).

These curb cut provisions shall apply as follows:

(1) In R6, R7 and R8 Districts without a letter suffix, to non-#Quality Housing buildings# or non-#Quality Housing building segments#, any of which contain four or more #dwelling units#;

(2) In R6, R7 and R8 Districts without a letter suffix, to #Quality Housing buildings# or #Quality Housing building segments#;

(3) In R6A, R7A, R7D, R7X, R8A, R8X Districts, to all #buildings#; and

(4) In R6B, R7B and R8B Districts, to #zoning lots# occupied by a #building# with a #street wall# at least 40 feet in width, or, for #zoning lots# with multiple #building segments#, only where such curb cut is in front of a #building segment# with a #street wall# at least 40 feet in width. On such #zoning lots#, curb cuts shall be permitted only on the #street# frontage that is at least 40 feet wide. On all other #zoning lots# in R6B, R7B and R8B Districts, curb cuts shall be prohibited.

(f) Modification of curb cut location requirements:

R2X R3 R4 R5 R6 R7 R8

(1) In the districts indicated, the location and width of curb cuts, as required by the provisions of this Section, may be modified if the Commissioner of Buildings certifies that the specified curb cut locations would require the removal of shade trees maintained by the City of New York. The Commissioner of Buildings may refer such matter to the Department of Parks and Recreation and the Department of Transportation for reports, and may base the determination on such reports.

R6 R7 R8

(2) In the districts indicated, except R6, R7 or R8 Districts with a letter suffix, the City Planning Commission may authorize modification of the location and width of curb cuts as required by the provisions of this Section provided that the Commission finds that:

(i) the proposed modification does not adversely affect the character of the surrounding area; and

(ii) where more than one curb cut is provided, the curb cuts are arranged to foster retention of curb side parking spaces along the #street frontage# of the #zoning lot#.

25-632
Driveway and curb cut regulations in lower density growth management areas

The provisions of this Section shall apply to all #zoning lots# with buildings# containing #residences# within all #lower density growth management areas#, except that these provisions shall not apply to any #zoning lot# occupied by only one #single-family detached residence# with at least 60 feet of frontage along one #street# and, for such #residences# on #corner lots#, with at least 60 feet of frontage along two #streets#.

(a) For #zoning lots# with less than 33 feet of frontage along a #street#, only one curb cut, having a maximum width, including splays, of ten feet, shall be permitted.

* * *

(e) All #zoning lots# with #buildings# containing #residences# shall maintain a minimum distance of 16 feet of uninterrupted curb space between all curb cuts constructed after June 30, 1989.

* * *

25-633
Curb cut restrictions for certain buildings in R1 through R5 Districts

R1 R2 R3A R3X R3-1 R4A R4-1 R5A

(a) In the districts indicated, curb cuts are prohibited for #attached buildings#~~. Furthermore, for a #semi-detached building# that #abuts# an #attached building#~~ except where such #building# is bounded on one side by a #side yard# at least eight feet in width. For such #buildings#, a curb cut shall only be permitted along that portion of the #street# frontage of the #zoning lot# directly in front of a #side yard# that is at least eight feet wide and accesses a parking space located beyond the #street wall# or prolongation thereof.

R1 R2 R3A R3X R4A R5A

(b) In the districts indicated, for #semi-detached buildings#, a curb cut shall only be permitted along that portion of the #street# frontage of the #zoning lot# directly in front of a #side yard# that is at least eight feet wide and accesses a parking space located beyond the #street wall# or prolongation thereof.

* * *

25-67
Parking Lot Landscaping

R1 R2 R3 R4 R5 R6 R7 R8 R9 R10

In all districts, as indicated, the provisions of Section 37-90 (PARKING LOTS), inclusive, shall apply to ~~all #developments# and #enlargements#, as defined in this Section, that provide an~~ open parking areas ~~#accessory# to #community facility uses#~~ that contain 18 or more spaces or are greater than 6,000 square feet in area~~.~~

~~For the purposes of this Section, #developments# and #enlargements# shall be defined~~ as follows:

(a) #developments# with #accessory# open parking areas ~~shall include only those~~ in which 70 percent or more of the #floor area# on the #zoning lot# is occupied by a #community facility use#; ~~and~~

(b) #enlargements# of a #building# with #accessory# open parking areas or the #enlargement# of an open parking area ~~shall include only those~~ that result in:

(1) an increase in the ~~a~~ total number of parking spaces #accessory# to #commercial# or #community facility uses# on the #zoning lot# that is at least 20 percent greater than the number of such spaces existing on November 28, 2007; or

(2) an increase in the ~~a~~ total amount of #floor area# on the #zoning lot# that is at least 20 percent greater than the amount of #floor area# existing on November 28, 2007, and where at least 70 percent of the #floor area# on the #zoning lot# is occupied by #commercial# or #community facility uses#~~.~~; and

(c) existing #buildings# with new #accessory# open parking areas in which 70 percent or more of the #floor area# on the #zoning lot# is occupied by a #commercial# or #community facility use#.

The provisions of this Section shall not apply to surface parking located on the roof of a #building#, indoor parking garages, #public parking garages#, structured parking facilities, or #developments# in which at least 70 percent of the #floor area# or #lot area# on a #zoning lot# is used for automotive #uses# listed in Use Groups 9 or 16.

* * *

Off-Street Loading Regulations

25-70
GENERAL PURPOSES

* * *

25-72
Required Accessory Off-Street Loading Berths

R1 R2 R3 R4 R5 R6 R7 R8 R9 R10

In all districts, as indicated, #accessory# off-street loading berths, open or enclosed, shall be provided in conformity with the requirements set forth in the following table for all ~~new~~ #development# or #enlargement# after December 15, 1961, for the #uses# listed in the table, as a condition precedent to the #use# of such #development# or #enlargement#.

After December 15, 1961, if the #use# of any #building or other structure# is #enlarged#, the requirements set forth in the table shall apply to the #floor area# of the #enlarged# portion of such #building#.

REQUIRED OFF-STREET LOADING BERTHS
FOR ~~NEW CONSTRUCTION~~DEVELOPMENTS OR ENLARGEMENTS

Type of #Use#	For #Floor Area# (in square feet)	Required Berths	District
Hospitals and related facilities*	First 10,000	None	R1 R2 R3 R4 R5 R6 R7 R8 R9 R10
	Next 290,000	1	
	Each additional 300,000 or fraction thereof	1	
#Commercial uses# in #large-scale residential developments#	First 8,000	None	R1 R2 R3 R4 R5 R6
	Next 17,000	1	
	Next 15,000	1	
	Next 20,000	1	
	Next 40,000	1	
	Each additional 150,000 or fraction thereof	1	
#Commercial uses# in #large-scale residential developments#	First 25,000	None	R7 R8 R9 R10
	Next 15,000	1	
	Next 60,000	1	
	Each additional 150,000 or fraction thereof	1	

* Requirements are in addition to area utilized for ambulance parking.

* * *

25-80
BICYCLE PARKING

R1 R2 R3 R4 R5 R6 R7 R8 R9 R10

~~In all districts, as indicated, bicycle parking spaces shall be provided in accordance with the requirements set forth in this Section, inclusive, as a condition precedent to the #use# of such #development#, #enlargement#, #dwelling unit#, #conversion#, #group parking facility# or open parking area.~~

In all districts, as indicated, ~~T~~the provisions of this Section, inclusive, related to bicycle parking spaces shall apply to:

(a) #developments#;

(b) #enlargements# that increase the #floor area# within a #building# by 50 percent or more;

(c) #dwelling units# created by #conversions# of non-#residential floor area#;

(d) new #dwelling units# in #~~residential~~ buildings# or #building segments# constructed after April 22, 2009;

(e) new enclosed #accessory group parking facilities# with 35 or more automobile parking

spaces; and

(f) open parking areas #accessory# to #commercial# or #community facility uses# that contain 18 or more automobile parking spaces or are greater than 6,000 square feet in area.

In addition, the provisions of Section 25-85 (Floor Area Exemption) shall apply to all #buildings# as set forth therein.

The number of #accessory# bicycle parking spaces provided pursuant to this Section, the total area, in square feet, of bicycle parking spaces and the total area, in square feet, excluded from the calculation of #floor area# for such spaces shall be noted on the certificate of occupancy.

25-81
Required Bicycle Parking Spaces

25-811
Enclosed bicycle parking spaces

R1 R2 R3 R4 R5 R6 R7 R8 R9 R10

In all districts, as indicated, enclosed #accessory# bicycle parking spaces shall be provided for at least that amount specified for the applicable #use# set forth in the table in this Section. For the purposes of calculating the number of required bicycle parking spaces, any fraction of a space 50 percent or greater shall be counted as an additional space. For #residences#, the #accessory# bicycle parking requirement shall be calculated separately for separate #buildings# or #building segments#.

* * *

However, the bicycle parking requirements set forth in the table shall be waived for bicycle parking spaces that are #accessory# to:

(a) #~~residential~~ buildings# or #~~residential~~ building segments# containing 10 #dwelling units# or less;

* * *

25-85
Floor Area Exemption

R1 R2 R3 R4 R5 R6 R7 R8 R9 R10

In all districts, as indicated, space provided for enclosed #accessory# bicycle parking spaces pursuant to the standards of this Section, shall be excluded from the calculation of #floor area#, provided that:

(a) the space excluded from #floor area# does not exceed an amount equal to 15 square feet multiplied by the number of required spaces or, if spaces are waived pursuant to paragraphs (a), (b), (c) or (d) of Section 25-811 (Enclosed bicycle parking spaces), the number that would have been required but for the waiver<u>, or, if spaces are not required because the #building# was constructed prior to April 22, 2009, the number that would be required if such #building# were newly constructed</u>; and

(b) the #accessory# bicycle parking spaces provided meet the standards for required bicycle parking of Section 25-83 (Restrictions on Operation, Size and Location of Enclosed Bicycle Parking Spaces).

Notwithstanding the provisions of paragraph (a) of this Section, for the #uses# listed in the table, the amount of space that may be excluded from the calculation of #floor area# shall not exceed an amount equal to 15 square feet multiplied by the number of spaces set forth in the table.

* * *

Article II
Chapter 6
Special Urban Design Guidelines - Streetscape
Special Requirements for Developments in R9 and R10 Districts, Developments with Private Roads and Street Tree Planting

26-00
Applicability of this Chapter

The regulations of this Chapter shall apply ~~to~~:

(a) in R9 and R10 Districts, to #developments#, as defined in Section 26-13, ~~in R9 and R10 Districts,~~ as set forth in Section 26-10 (SPECIAL REQUIREMENTS FOR DEVELOPMENTS IN R9 AND R10 DISTRICTS). However, the provisions of Section 26-10 shall not apply within any Special Purpose District or to any #~~building developed# or #enlarged# pursuant to the~~ Quality Housing building# ~~Program~~;

(b) in R3, R4 and R5 Districts, ~~#developments# in R3, R4 and R5 Districts~~ to #zoning lots# with #buildings# accessed by #private roads#, as set forth in Section 26-20 (SPECIAL REQUIREMENTS FOR DEVELOPMENTS WITH PRIVATE ROADS), except where such #~~developments#~~#zoning lots#:

(1) consist entirely of #single-family detached residences#; or

(2) are accessed by #private roads# that existed on February 6, 2002; or

(3) are located within #lower density growth management areas#, in which case the provisions of paragraph (c) of this Section shall apply;

(c) ~~#developments#~~ in #lower density growth management areas#, to #zoning lots# with #buildings# accessed by #private roads#, as set forth in Section 26-30 (SPECIAL REQUIREMENTS FOR DEVELOPMENTS WITH PRIVATE ROADS IN LOWER DENSITY GROWTH MANAGEMENT AREAS); and

(d) #developments#, #enlargements# or #conversions# in all districts, as applicable, as set forth in Section 26-40 (STREET TREE PLANTING AND PLANTING STRIP REQUIREMENTS).

26-10
SPECIAL REQUIREMENTS FOR DEVELOPMENTS IN R9 AND R10 DISTRICTS

In R9 and R10 districts, ~~An~~ an application to the Department of Buildings for a permit respecting any ~~new~~ #development# shall include a plan and an elevation, drawn to a scale of at least one-sixteenth inch to a foot, of the new #building# and #buildings# on #contiguous lots# or #contiguous blocks# showing #arcades#, #street wall# articulation, curb cuts, #street# trees, sidewalk paving, a central refuse storage area and such other necessary information as may be required by the Commissioner of Buildings.

26-11
General Purposes

The urban design guidelines are established to strengthen, at street level, the relationship of ~~new~~ developments with existing buildings and to improve the quality of the streetscape by:

(a) maintaining the visual continuity of ~~new~~ developments at street level;

(b) enhancing the visual character of the neighborhood; and

(c) reducing conflict between pedestrian and vehicular circulation.

26-12
General Provisions

In harmony with the general purposes and intent of this Resolution and the general purposes of Section 26-10, the regulations of Sections 26-13 through 26-17, inclusive, are intended to:

(a) guide the location of arcades to assure horizontal continuity of ~~new~~ developments with existing building arcades and to maintain visual continuity at street level;

(b) require transparency and/or articulation of front walls to improve the visual quality of the street;

(c) improve the quality of the street environment;

(d) limit the number and location of curb cuts, minimizing undue conflict between pedestrian and vehicular movements; and

(e) eliminate trash on sidewalks by requiring central refuse storage areas within the zoning lot.

26-13
Definitions

For the purposes of Sections 26-10 through 26-17, inclusive, the following definitions shall apply:

Development

In addition to the definition of #development# set forth in Section 12-10 (Definitions), "~~D~~development" shall also include~~s construction of a new #building or other structure# on a #zoning lot#, the relocation of an existing #building# on another #zoning lot# or~~ an #enlargement# involving an increase in #lot coverage#.

Contiguous lot

A "contiguous lot" is a #zoning lot# which shares a common #side lot line# with the #zoning lot# of the #development#.

Contiguous block

A "contiguous block" is a #block# containing one or more #zoning lots# separated by a #narrow street# from the #block# containing the ~~new~~ #development#.

26-14
Horizontal Continuity

Horizontal continuity regulations set forth in this Section are intended to relate ~~new~~ #developments# with existing #buildings#, at #street# level, in order to maintain visual and functional continuity relating to the following aspects.

* * *

26-142
Street wall articulation

When any building wall of a #development# that is five feet or more in height adjoins a sidewalk, a #public plaza# or an #arcade#, at least 25 percent of the total surface area of such walls between #curb level# and 12 feet above #curb level# or to the ceiling of the ground floor, whichever is higher, or to the full height of the wall if such wall is less than 12 feet in height, shall be transparent. The lowest point at any point of any transparency that is provided to satisfy the requirements of this Section shall not be higher than four feet above the #curb level#.

Door or window openings within such walls shall be considered as transparent. Such openings shall have a minimum width of two feet.

In addition, any portion of such building wall, 50 feet or more in ~~length~~ width, which contains no transparent element between #curb level# and 12 feet above #curb level# or the ceiling of the ground floor, whichever is higher, or to its full height if such wall if less than 12 feet in height, shall be covered with vines or similar planting or contain artwork or be treated so as to provide visual relief. Plantings shall be planted in soil having a depth of not less than 2 feet, 6 inches, and a minimum width of 24 inches. If artwork is being used, approval by the New York City Art Commission shall be obtained prior to the certificate of occupancy being issued for the #development#.

* * *

26-16
Central Refuse Storage Area

All ~~new~~ #developments# shall provide facilities for central trash storage within the #zoning lot#. Where such facilities are provided outside of a #building#, such facilities shall be screened by an enclosure containing materials compatible with the materials of the front building wall of the #development#.

In all cases, there shall be an area for central trash collection provided at the rate of 75 square feet for uncompressed garbage or 50 square feet for compressed garbage for each 10,000 square feet of #lot area#. Such area shall be ventilated.

* * *

26-20
SPECIAL REQUIREMENTS FOR DEVELOPMENTS WITH PRIVATE ROADS

To provide for the orderly development of #residences# that are distant from #streets#, site planning requirements are established in Sections 26-20 through 26-27, inclusive. The regulations of this Section are intended to:

(a) optimize vehicular access within ~~a #development#~~ and among #zoning lots# containing #private roads#;

(b) regulate the size of and distance between curb cuts to minimize undue conflict between pedestrian and vehicular movement;

(c) provide for sidewalks to facilitate social interaction and enhance pedestrian safety; and

(d) provide for tree planting along #private roads# in order to enhance the visual and environmental character of the neighborhood.

26-21
Requirements for Private Roads

#Private roads# shall consist of a paved road bed constructed to minimum Department of Transportation standards for public #streets#, including curbs and curb drops. The minimum

width of a #private road# shall be 38 feet from curb to curb along its entire length or, ~~for #developments#~~ where at least three #accessory# parking spaces are provided for every two #dwelling units# and no such spaces are located within the bed of a #private road#, the minimum width shall be 34 feet. The entrance to any #group parking facility# may be narrower than such minimum widths for a distance not to exceed 20 feet, and a #private road# may contain a landscaped median provided the paved width of such #private road# meets the minimum width required exclusive of such medians. The City Planning Commission may modify the required width of a #private road#, pursuant to Section 26-26 (Modification and Waiver Provisions).

* * *

26-26
Modification and Waiver Provisions

(a) The City Planning Commission may, by authorization, allow modifications to, or waivers of, the requirements of Sections 26-20 through 26-27, inclusive, provided that:

(1) such modifications or waivers will enhance the design quality of the #zoning lots# ~~#development#~~;

(2) any decrease in the required width of the paved road bed is in conjunction with a superior parking plan that would not be feasible with a wider road bed; and

(3) any decrease in the required width of the paved road bed will result in the preservation of existing natural features or a superior landscaping plan that would not be feasible with a wider road bed.

(4) No modification or waiver may be granted which would waive or decrease the width of the paved road bed to less than 34 feet.

(b) The City Planning Commission may, by authorization, allow modifications to, or waivers of, the requirements of Sections 26-20 through 26-27, inclusive, for ~~#developments#~~ #zoning lots# within the #Special South Richmond Development District#, that:

(1) contain #designated open space# and a portion of the #waterfront esplanade#, where such ~~#development#~~ #zoning lots#:

(i) ~~has~~ have been granted an authorization pursuant to Section 107-65 (Modifications of Existing Topography) within one year prior to February 6, 2002; or

(ii) ~~is~~ are conditioned upon a restrictive declaration that has received a minor modification by the City Planning Commission; or

(2) are located wholly or partially within Area M and have filed an application for an authorization pursuant to Section 107-69 (Residential Uses in Area M) within one year prior to February 6, 2002; or

(3) have been granted authorizations pursuant to Section 107-64 (Removal of Trees) and 107-65 and are located on a #zoning lot# where a change in the City Map has been approved within three years prior to February 6, 2002, and where certified copies of the alteration map for such change in the City Map have not yet been filed in accordance with Section 198, subsection (c), of the New York City Charter, as of February 6, 2002.

In order to authorize such modifications or waivers pursuant to this paragraph, (b), the Commission shall find that such ~~#development# constitutes~~ #zoning lots# will be #developed# pursuant to a good site plan, and that ~~such #development# provides~~ adequate access to all #dwelling units#, adequate parking spaces located outside of the roadbed of the #private road#, adequate spacing of all curb cuts and adequate landscaping

will be provided.

26-27
Waiver of Bulk Regulations ~~for Developments~~ within Unimproved Streets

In R3, R4 and R5 Districts, and in C1 and C2 Districts mapped within R3, R4 and R5 Districts, and in C3 Districts, the City Planning Commission may authorize the waiver of #bulk# regulations for:

(a) ~~#developments# of~~ #zoning lots# with #private roads# that access at least 20 #dwelling units# ~~accessed by #private roads#~~ consisting in part of construction within #streets# that are unimproved and for which the Board of Standards and Appeals has granted a permit pursuant to Section 35 of the General City Law; and

(b) ~~#developments# of~~ #zoning lots# with #private roads# that access ~~less~~ fewer than 20 #dwelling units# ~~accessed by #private roads#~~ consisting in part of construction within #streets# that are unimproved and for which the Board of Standards and Appeals has granted a permit pursuant to Section 35 of the General City Law and where such ~~#development#~~ #zoning lot# has received an authorization pursuant to paragraph (a) of Section 26-26;

The Commission may authorize the waiver of #bulk# regulations affected by such #streets# where ~~such #development#~~ #buildings# would be #non-complying# absent such waiver, provided the Board of Standards and Appeals has prescribed conditions pursuant to Section 35 of the General City Law which require the ~~portion of the #development#~~ #buildings# or portions thereof to be located within the unimproved #streets# to be compliant and conforming to the provisions of this Resolution. Such waivers shall only be as necessary to address #non-compliance# resulting from the location of the ~~#development#~~ #buildings# within and outside the unimproved #streets#.

The Commission shall find that the #private roads# are adequate to serve present and future transportation needs and that, through the grant of such waivers, the #development# complies to the maximum extent feasible with all applicable zoning regulations as if such unimproved #streets# were not mapped, and that the #private road# system results in a good site plan.

26-30
SPECIAL REQUIREMENTS FOR DEVELOPMENTS WITH PRIVATE ROADS IN LOWER DENSITY GROWTH MANAGEMENT AREAS

For all ~~#developments#~~ #zoning lots# with #buildings# accessed by #private roads# in #lower density growth management areas#, the provisions of Sections 26-20 through 26-27, inclusive, shall apply. In addition, such regulations are supplemented or superceded in accordance with the provisions of this Section.

* * *

26-34
Lighting, Signage and Crosswalks

All #private roads# shall ~~be #developed# with~~ provide street lighting, street signage and crosswalks to minimum Department of Transportation standards for public #streets#.

* * *

26-36
Modification and Waiver Provisions

Except in the Borough of Staten Island, the City Planning Commission may, by authorization,

allow modifications to, or waivers of, the requirements of Sections 26-30 through 26-35, inclusive, provided that the depth of a #rear yard# shall not be less than 15 feet and the depth of a #front yard# shall not be less than five feet. In order to authorize such modifications or waivers, the Commission shall find that:

(a) such modifications result in a site plan that provides sufficient open areas for the residents ~~of the #development#~~;

(b) any reduction in open areas shall be permitted only where the Commission finds that a good site plan has been provided that includes a superior landscaping plan; and

(c) such modifications will not impair the essential character of the surrounding area.

The Commission may prescribe additional conditions and safeguards to minimize adverse effects on the character of the surrounding area.

* * *

26-41
Street Tree Planting

* * *

All such alternative locations shall be within the Community District or one-half mile of ~~the #development# site~~ such #zoning lot#.

In lieu of planting an off-site tree in an available alternative location, or in the event that planting adjacent to the #zoning lot# cannot be completed due to the season, funds equivalent to the cost of planting such tree, as established by rule of the Department of Parks and Recreation, may be deposited in an account of the City of New York. Such funds shall be dedicated to the planting of #street# trees by the City at an alternative location or, in the case of an off-season deposit, in front of the #zoning lot# at the next appropriate planting season.

The species and caliper of all #street# trees shall be determined by the Department of Parks and Recreation, and all such trees shall be planted in accordance with the #street# tree planting standards of the Department of Parks and Recreation.

26-42
Planting Strips

In accordance with applicability requirements of underlying district regulations, the owner of the #development#, #enlargement# or #converted# #building# shall provide and maintain a planting strip. #Street# trees required pursuant to Section 26-41 shall be planted within such planting strip. In addition to such #street# trees, such strip shall be fully planted with grass or groundcover. Such planting strip shall be located adjacent to and extend along the entire length of the curb of the #street#. However, in the event that both adjoining properties have planting strips adjacent to the #front lot line#, such planting strip may be located along the #front lot line#. The width of such planting strip shall be the greatest width feasible given the required minimum paved width of the sidewalk on #street# segments upon which the #building# fronts, except that no planting strip less than six inches in width shall be required. Driveways are permitted to traverse such planting strip, and utilities are permitted to be located within such planting strip.

Article II
Chapter 8
The Quality Housing Program

28-00
GENERAL PURPOSES

* * *

28-01
Applicability of this Chapter

The Quality Housing Program is a specific set of standards and requirements for #buildings# containing #residences#. In R6A, R6B, R7A, R7B, R7D, R7X, R8A, R8B, R8X, R9A, R9D, R9X, R10A or R10X Districts, and in the equivalent #Commercial Districts# listed in Sections 34-111 and 34-112, all such #buildings# shall comply with the Quality Housing Program standards and requirements as set forth in this Chapter. In R5D Districts, only the requirements set forth in Sections 28-12 (Street Tree Planting), 28-23 (Refuse Storage and Disposal), 28-33 (Planting Areas) and 28-53 (Location of Accessory Parking) shall apply.

In other R6, R7, R8, R9 or R10 Districts, and in the equivalent #Commercial Districts# listed in Sections 34-111 and 34-112, #residential developments#, or #residential enlargements# where permitted, electing to use the optional Quality Housing #bulk# regulations in Article II, Chapter 3, shall comply with the Quality Housing Program standards and requirements set forth in this Chapter.

The provisions of Article VII, Chapter 8 (Large-Scale Residential Developments), are not applicable to ~~#residential developments# pursuant to the~~ #Quality Housing buildings# ~~Program~~.

The provisions of this Chapter shall not apply to ~~the conversion to~~ #dwelling units# #converted# pursuant to Article I Chapter 5 ~~of non-#residential buildings#, or portions thereof, erected prior to December 15, 1961, in Manhattan Community Districts 1, 2, 3, 4, 5 and 6, Brooklyn Community Districts 1, 2, 6 and 8, and Queens Community Districts 1 and 2~~, unless such #conversions# meet the requirements for ~~new~~ #residential developments# of Article II (Residence District Regulations).

* * *

28-03
Quality Housing Program Elements

The Quality Housing Program consists of four components: neighborhood impact, building interior, recreation space and planting, and safety and security.

The neighborhood impact component controls the effect of the #Quality Housing ~~#~~ building# on the neighborhood and includes mandatory #bulk# regulations.

The building interior component sets a minimum size of a #dwelling unit# ~~#residential# unit~~, mandates special refuse storage and disposal systems, and encourages laundry facilities and daylight in corridors.

The recreation and planting component establishes minimum space standards for indoor and outdoor recreation space and requires planting of open areas between the front building wall and the #street#.

The safety and security component encourages fewer #dwelling units# ~~#residential# units~~ per corridor.

Each #Quality Housing ~~#~~ building# shall comply with the mandatory requirements of this

Chapter.

28-10
NEIGHBORHOOD IMPACT

28-11
Bulk Regulations

The #bulk# regulations for #Quality Housing ~~#developments# or #enlargements~~ buildings# are set forth in the provisions applicable to the Quality Housing Program in Article II, Chapter 3; Article II, Chapter 4; Article III, Chapter 4 and Article III, Chapter 5.

~~**28-12**~~
~~**Street Tree Planting**~~

~~In addition to the applicable underlying #street# tree planting requirements, all #Quality Housing #extensions# that increase the existing #residential floor area# by at least 20 percent, shall provide #street# trees in accordance with Section 26-41 (Street Tree Planting).~~

28-20
BUILDING INTERIOR

* * *

28-23
Refuse Storage and Disposal

In R6 through R10 Districts, #developments# with nine or more #dwelling units# or #rooming units# per #vertical circulation core#, and #enlargements#, #extensions# ~~and~~ or #conversions# ~~with~~ that result in nine or more #dwelling units# or #rooming units# per #vertical circulation core# shall comply with the provisions of this Section.

In R5D Districts, #developments# with nine or more #dwelling units# per #zoning lot#, and #enlargements#, #extensions# ~~and~~ or #conversions# ~~with~~ that result in nine or more #dwelling units# per #zoning lot# shall comply with the provisions of this Section. Such provisions shall also apply to any #zoning lot# with less than nine units where such #zoning lot# and any adjacent #zoning lot# ~~is part of a #development# or #enlargement# on adjacent #zoning lots#~~ with a total of nine or more #dwelling units# are #developed# or #enlarged# under common ownership or control.

The storage of refuse shall occur entirely within an enclosed area on the #zoning lot# and appropriate locations within the #zoning lot# shall be delineated for this purpose: at least one for #residential uses# and at least one for #community facility# and #commercial uses#. #Residential# storage and removal locations shall be provided at the rate of 2.9 cubic feet per #dwelling unit# or 1.15 cubic feet per #rooming unit#.

A refuse disposal room of not less than twelve square feet with no dimension less than three feet shall be provided on each #story# that has entrances to #dwelling units# or #rooming units#. Twelve square feet of such refuse storage room shall be excluded from the definition of #floor area#.

* * *

28-30
RECREATION SPACE AND PLANTING AREAS

28-31
Required Recreation Space

All #developments#, #enlargements#, #extensions# or #conversions#, with nine or more #dwelling units# or #rooming units#, shall provide at least the minimum amount of recreation space as set forth in the following table.

The amount of recreation space required is expressed as a percentage of the total #residential floor area# of the #development#, #enlargement#, #extension# or #conversion#, and may be aggregated in one type, indoors or outdoors.

The floor space of indoor recreation space provided in accordance with the standards set forth in Section 28-32 (Standards for Recreation Space), not exceeding the amount required in the following table, shall be excluded from the definition of #floor area#.

Minimum Required Recreation Space (as a percentage of the #residential floor area#)	District
3.3	R6 R7
2.8	R8 R9 R10

* * *

28-33
Planting Areas

The area of the #zoning lot# between the #street line# and the #street wall# of the #building# shall be planted at ground level, or in raised planting beds that are permanently affixed to the ground pursuant to the provisions of Section 23-892 (In R6 through R10 Districts).

* * *

28-50
PARKING FOR QUALITY HOUSING

* * *

28-51
Screening

All open #accessory# off-street #group parking facilities# shall be screened from #dwelling units# ~~#residential# units~~, adjacent #zoning lots# and #streets# in accordance with paragraph (a) of Section 25-66 (Screening).

* * *

Article III
Chapter 2
Use Regulations

32-00
GENERAL PROVISIONS

In order to carry out the purposes and provisions of this Resolution, the #uses# of #buildings or other structures# and ~~of tracts of land~~ the open #uses# of #zoning lots#, or portions thereof, have been classified and combined into Use Groups. A brief statement is inserted at the start of each Use Group to describe and clarify the basic characteristics of that Use Group. Use Groups 1, 2, 3, 4, 5, 6, 7, 8, 9, 10, 11, 12, 13, 14, 15 and 16, including each #use# listed separately therein, are permitted in #Commercial Districts# as indicated in Sections 32-11 to 32-25, inclusive, except that any such #use# which is also an #adult establishment# shall, in addition, be subject to the provisions of Section 32-01 (Special Provisions for Adult Establishments).

In Manhattan Community Districts 1, 2, 3, 4, 5 and 6, Brooklyn Community Districts 1, 2, 6 and 8, and Queens Community Districts 1 and 2, the #conversion# ~~to #dwelling units#~~ of non-#residential floor area ~~buildings#~~ to #residences#~~, or portions thereof, erected prior to December 15, 1961,~~ shall be subject to the provisions of Article I, Chapter 5 (Residential Conversion ~~of~~ within Existing ~~Non-Residential~~ Buildings), unless such #conversions# meet the requirements for ~~new #residential development#~~ #residences# of Article II (Residence District Regulations).

All districts indicated in Column A shall comply with the regulations for districts indicated in Column B except as set forth in the sections indicated in Column C.

Column A	Column B	Column C
C1 and C2 in R9A	R9	32-43
C1 and C2 in R10A	R10	32-43
C1-8A	C1-8	32-43
C1-9A	C1-9	32-43
C2-7A	C2-7	32-43
C2-8A	C2-8	32-43
C4-6A	C4-6	32-43
C4-7A	C4-7	32-43
C6-1A	C6-1	32-15 32-16 32-17 32-20 32-644

In a C8 District, any #use# listed in Use Group 11A or 16 that involves the production, processing, cleaning, servicing, testing or repair of products, goods, or materials shall conform to the performance standards for M1 Districts as set forth in Sections 42-20 and 42-28 inclusive, relating to Performance Standards.

In C5 and C6 Districts in Manhattan Community Districts 1, 2, 3, 4, 5 and 6, all existing lawful #uses# in Use Groups 17B or E in existing enclosed #buildings# erected prior to December 15, 1961, shall be considered conforming and shall conform to the performance standards for M1 Districts as set forth in Sections 42-20 and 42-28, inclusive, relating to Performance Standards. Such #uses# may be #extended# within #buildings# or into #abutting buildings# on the same #zoning lot# .

* * *

32-10
USES PERMITTED AS-OF-RIGHT

* * *

32-15
Use Group 6

C1 C2 C4 C5 C6 C8

Use Group 6 consists primarily of retail stores and personal service establishments which:

(1) provide for a wide variety of local consumer needs; and

(2) have a small service area and are, therefore, distributed widely throughout the City.

Public service establishments serving small areas are also included. Retail and service establishments are listed in two subgroups, both of which are permitted in all C1 Districts.

The #uses# listed in subgroup A are also permitted within a #large-scale residential development~~s~~# to provide daily convenience shopping for its residents ~~of the #development#~~.

A. Convenience Retail or Service Establishments

* * *

B. Offices

Offices, business, professional including ambulatory diagnostic or treatment health care, or governmental [PRC-B1]

Veterinary medicine for small animals, provided all activities are conducted within a #completely enclosed building#; where such #building# contains a #residential use#, no access shall be from an entrance serving the #residential# portion [PRC-B1]

C. Retail or Service Establishments

* * *

32-25
Use Group 16

C8

Use Group 16 consists of automotive and other necessary semi-industrial #uses# which:

(1) are required widely throughout the city; and

(2) involve offensive noise, vibration, smoke, dust, or other particulate matter, odorous matter, heat, humidity, glare, or other objectionable influences, making such #uses# incompatible with #residential uses# and other ~~types of~~ #commercial uses# ~~#development#~~.

A. Retail or Service Establishments

* * *

32-32
By the City Planning Commission

* * *

C1 C2 C3 C4 C5 C6 C7
#Non-profit hospital staff dwellings#, located not more than 1,500 feet from the non-profit or voluntary hospital

C1 C2 C3 C4 C5 C6
Nursing homes and health related facilities in Community Districts ~~designated in Section 74-903~~ in which the conditions set forth in Section 22-42(Certification of Certain Community Facility Uses) apply.

* * *

32-40
SUPPLEMENTARY USE REGULATIONS

32-41
Enclosure within Buildings

C1 C2 C3 C4 C5 C6 C8

In the districts indicated, except as otherwise specifically provided in the Use Groups permitted in such districts and in Sections 36-11 (General Provisions), 36-61 (Permitted Accessory Off-Street Loading Berths) and 73-36 (Physical Culture or Health Establishments), all permitted #uses# which are created by ~~new~~ #development#, or which are #enlarged# or #extended#, or which result from a change of #use# shall be subject to the provisions of this Section with respect to enclosure within #buildings#. With respect to the #enlargement# or #extension# of an existing #use#, such provisions shall apply to the #enlarged# or #extended# portion of such #use#.

* * *

32-42
Location within Buildings

32-421
Limitation on floors occupied by ~~non-residential~~ commercial uses

C1 C2 C3

In the districts indicated, in any #building#, or portion of a #building# occupied on one or more of its upper #stories# by #residential uses# ~~listed in Use Group 1 or 2~~ or by #community facility uses# ~~listed in Use Group 3 or 4~~, no ~~non-#residential~~ #commercial uses# listed in Use Group 6, 7, 8, 9 or 14 shall be located above the level of the first #story# ceiling, provided, however, that permitted #signs#, other than #advertising signs#, #accessory# to such ~~non-#residential~~ #commercial uses# may extend to a maximum height of two feet above the level of the finished floor of the second #story#, but in no event higher than six inches below the lowest window sill of the second #story#. In any other #building#, or portion thereof, not more than two #stories# may be occupied by ~~non-#residential~~ #commercial uses# listed in Use Group 6A, 6B, 6C, 6F, 7, 8, 9 or 14.

Non-#residential uses# listed in Use Group 6, 7, 8, 9 or 14, where permitted by the applicable district regulations, may occupy the lowest two #stories# in any #building# constructed after September 17, 1970 ~~new #development#~~ in C1 or C2 Districts mapped within R9 or R10 Districts or in C1-8, C1-9, C2-7 or C2-8 Districts.

32-422
Location of floors occupied by ~~non-residential~~ commercial uses

C4 C5 C6

In the districts indicated, in any #building#, or portion of a #building# occupied by #residential uses# ~~listed in Use Group 1 or 2~~, ~~non-#residential~~ #commercial uses# listed in Use Group 5, 6, 7, 8, 9, 10, 11, 12, 13, 14, 15 or 16 may be located only on a #story# below the lowest #story# occupied in whole or in part by such ~~#residential uses#~~ #dwelling units# or #rooming units#, except that this limitation shall not preclude the location of any such ~~non-#residential~~ #commercial use# below the level of the first #story# ceiling, or the extension of a permitted #sign#, other than #advertising sign#, #accessory# to such ~~non-#residential~~ #commercial use# to a maximum height of two feet above the level of the finished floor of the second #story#, but in no event higher than six inches below the lowest window sill on the second #story#.

* * *

32-43
Ground Floor Use in Certain Locations

32-431
Ground floor use in C1-8A, C1-9A, C2-7A, C2-8A, C4-6A and C4-7A Districts

C1-8A C1-9A C2-7A C2-8A C4-6A C4-7A

In the districts indicated, and in C1 and C2 Districts mapped within R9A and R10A Districts, #uses# ~~on the ground floor or~~ within #stories# that have a floor level within five feet of #curb level# fronting on a #wide street# shall be limited to non-#residential uses# ~~and~~ or lobby space for #residential uses#.

~~Lobbies~~ Such lobbies shall not occupy more than 20 linear feet of #street wall# frontage on a #wide street# or 30 linear feet on a #narrow street#. Non-#residential use# shall have a depth of at least 15 feet from the #street wall#. No more than 8,000 square feet shall be devoted to Use Group 6B ~~at the ground floor or~~ within #stories# that have a floor level within five feet of #curb level#.

The provisions of Section 32-512 (For corner lots) shall not apply.

The provisions of this Section shall not apply within Community Board 7, Borough of Manhattan.

32-432
Ground floor use in Community Board 7, Borough of Manhattan

Within the boundaries of Community Board 7 in the Borough of Manhattan, when a #development#, #enlargement# or change of #use# is located in an R10 equivalent #Commercial District#, #uses# ~~on the ground floor or~~ within #stories# that have a floor level within five feet of #curb level# fronting on a #wide street# shall be limited to non-#residential uses#, except lobby space.

* * *

32-434
Ground floor use in C4-5D and C6-3D Districts and in Certain C2 Districts

C4-5D C6-3D

In the districts indicated and in C2 Districts mapped within R7D or R9D Districts, #uses# ~~on the ground floor or~~ within #stories# that have a floor level within five feet of #curb level# shall be limited to non-#residential uses# which shall extend along the entire width of the #building#, and lobbies, entrances to subway stations and #accessory# parking spaces, provided such lobbies and entrances do not occupy, in total, more than 25 percent of the #street wall# width of the #building# or more than 20 linear feet of #street wall# frontage on a #wide street# or 30 linear

feet on a #narrow street#, whichever is less. Such non-#residential uses# shall have a minimum depth of 30 feet from the #street wall# of the #building#. In C6-3D Districts, a vertical circulation core shall be permitted within such minimum 30 foot depth.

Enclosed parking spaces, or parking spaces within a #building#, including such spaces #accessory# to #residences#, shall be permitted to occupy ~~the ground floor~~ #stories# that have a floor level within five feet of #curb level# provided they are located beyond 30 feet of the #street wall# of the #building#. However, loading berths serving any permitted #use# in the #building# may occupy up to 40 feet of such #street# frontage and, if such #building# fronts on both a #wide street# and a #narrow street#, such loading berth shall be located only on a #narrow street#.

* * *

32-44
Air Space over a Railroad or Transit Right-of-way or Yard

* * *

32-442
Use of railroad or transit air space

C1 C2 C3 C4 C5 C6 C7 C8

* * *

(b) When the #use# of a railroad or transit right-of-way or yard or portion thereof has been permanently discontinued or terminated and ~~is proposed for #development# as~~ a #large-scale residential# or #community facility development# or a #~~general~~ large-scale general development# requiring one or more special permits is proposed, no #use# or #development# of the property shall be allowed until the Commission has authorized the size and configuration of all #zoning lots# on such property ~~as part of such large-scale development~~. As a condition for such authorization, the Commission shall find that:

(1) the proposed #zoning lots#, indicated by a map describing the boundaries of the total area of each lot, are not excessively large, elongated or irregular in shape and that no #development# on any #zoning lot# would result in the potential for an excessive concentration of #bulk# that would be incompatible with allowable #developments# on adjoining property; and

(2) each resulting #zoning lot# has direct access to one or more #streets#.

* * *

32-45
Certification of Certain Community Facility Uses

C1 C2 C3 C4 C5 C6

In all districts, as indicated, for any nursing homes and health-related facilities or #enlargement#, #extension# or change in #use# thereof ~~not located within a Community District in which special permits are required under Section 74-903 (Designation of Community Districts in which special permits are required for certain community facility uses)~~, the City Planning Commission shall certify to the Department of Buildings, prior to the filing of any plans by the ~~developer~~ applicant for a building permit for ~~of~~ such #use#, that none of the following conditions applies to the Community District within which such #use#, or #enlargement#, #extension# or change in such #use# is to be located: ~~findings that are a precondition of designation pursuant to Section 74-903 exist in the Community District within which such #use# is to be located. If the Commission finds to the contrary, it shall initiate designation of a Section 74-903 district.~~

(1) the ratio between the number of beds for such #uses# in existence, under construction or approved toward construction by the appropriate federal or state

governmental agency, to the population of the Community District compared to such ratio for other Community Districts shows a relative concentration of facilities covered in this Section in the affected district; or

(2) a scarcity of land for general community purposes exists; or

(3) the incidence of construction of facilities for the last three years warrants review over these facilities because they threaten to disrupt the land use balance in the community.

If the Commission finds that one or more of the conditions set forth in this Section applies to the Community District within which such #use#, or #enlargement#, #extension# or change in such #use# is to be located, a special permit pursuant to Section 74-90 shall be required.

* * *

32-50
SPECIAL PROVISIONS APPLYING ALONG DISTRICT BOUNDARIES

* * *

32-52
Exceptions for Integrated Developments Divided by District Boundaries

C1 C2 C3 C4 C5 C6 C7 C8

In all districts, as indicated, primary business entrances, #show windows# or #signs# may be located on any frontage within a #Commercial District#, if the Commissioner of Buildings finds that the #zoning lot# on which the business entrance, #show window# or #sign# is to be located:

(a) is divided by a boundary between the #Commercial District# and a #Residence District#; or

(b) is presently in the same ownership as adjoining property located in a #Residence District# and no #building# in the #Residence District# exists, or will in the future be erected, within a distance of 75 feet from the #Commercial District#, as evidenced by deed restrictions filed in an office of record binding the owner and ~~his~~ the owner's heirs and assigns.

32-60
SIGN REGULATIONS

* * *

32-62
Permitted Signs

C1 C2 C3 C4 C5 C6 C7 C8

In all districts, as indicated, #signs# other than #advertising signs# are permitted subject to the provisions of the following Sections:

Section 32-64 (Surface Area and Illumination Provisions)

Section 32-65 (Permitted Projection or Height of Signs)

Section 32-66 (Additional Regulations for Signs Near Certain Parks and Designated Arterial Highways)

Section 32-67 (Special Provisions Applying along District Boundaries)

Section 32-68 (Permitted Signs on Residential ~~Buildings~~ or Mixed Buildings)

Section 32-69 (Additional Sign Regulations for Adult Establishments)

However, notwithstanding any provision of this Section, flags, banners or pennants other than those that are #advertising signs#, located on any #zoning lot# used primarily for #community facility uses# of a civic, philanthropic, educational or religious nature, are permitted in all districts, as indicated, without limitation.

32-63
Permitted Advertising Signs

C6-5 C6-7 C7 C8

In the districts indicated, #advertising signs# are permitted subject to the applicable provisions of the following Sections:

Section 32-64 (Surface Area and Illumination Provisions)

Section 32-65 (Permitted Projection or Height of Signs)

Section 32-66 (Additional Regulations for Signs Near Certain Parks and Designated Arterial Highways)

Section 32-67 (Special Provisions Applying along District Boundaries)

Section 32-68 (Permitted Signs on Residential ~~Buildings~~ or Mixed Buildings).

* * *

32-68
Permitted Signs on Residential or Mixed Buildings

C1 C2 C3 C4 C5 C6

In the districts indicated, any #use# listed in Use Group 1 or 2 shall conform to the #sign# regulations for #Residence Districts# set forth in Sections 22-31 to 22-34, inclusive. In #residential# or #mixed buildings#, #residential sign# regulations shall apply to ~~a #building# or part of a #building# used for~~ the #residential# portion ~~purposes~~.

Where non-#residential uses# are permitted to occupy two floors of the #building#, all #signs accessory# to non-#residential uses# located on the second floor shall be non-#illuminated signs#, and shall be located below the level of the finished floor of the third #story#.

* * *

Article III
Chapter 3
Bulk Regulations for Commercial or Community Facility Buildings in Commercial Districts

33-00
APPLICABILITY, DEFINITIONS AND GENERAL PROVISIONS

33-01
Applicability of this Chapter

The #bulk# regulations of this Chapter apply to #commercial buildings#, #community facility buildings# or #buildings# used partly for #commercial use# and partly for #community facility use#, on any #zoning lot# or portion of a #zoning lot# located in any #Commercial District#, including all ~~new~~ #developments# or #enlargements#. As used in this Chapter, the term "any #building#" shall therefore not include a #residential building# or a #mixed building#, the #bulk# regulations for which are set forth in Article III, Chapter 4, and Article III, Chapter 5, respectively. In addition, the #bulk# regulations of this Chapter, or of specified Sections thereof, also apply in other provisions of this Resolution where they are incorporated by cross reference.

Existing #buildings or other structures# that do not comply with one or more of the applicable #bulk# regulations are #non-complying buildings or other structures# and are subject to the regulations set forth in Article V, Chapter 4.

Special regulations applying to #large-scale residential developments, community facility uses# in #large-scale residential developments# or #large-scale community facility developments# are set forth in Article VII, Chapter 8.

Special regulations applying only in Special Purpose Districts are set forth in Articles VIII, IX, X, XI, ~~and~~ XII and XIII.

All C6-1A Districts shall comply with the regulations of C6-1 Districts except as set forth in Sections 33-12, paragraph (c), 33-13, paragraph (b) and 33-15, paragraph (a).

In Manhattan Community Districts 1, 2, 3, 4, 5 and 6, Brooklyn Community Districts 1, 2, 6 and 8, and Queens Community Districts 1 and 2, the #conversion# ~~to #dwelling units#~~ of non-#residential floor area ~~buildings#~~ to #residences#~~, or portions thereof,~~ in #buildings# erected prior to December 15, 1961 or January 1, 1977, as applicable, shall be subject to the provisions of Article I, Chapter 5 (Residential Conversion ~~of~~ within Existing ~~Non-Residential~~ Buildings), unless such #conversions# meet the requirements for ~~new~~ #residential development# of Article II (Residence District Regulations).

Special regulations applying in the #waterfront area# are set forth in Article VI, Chapter 2.

* * *

33-03
Street Tree Planting in Commercial Districts

C1 C2 C3 C4 C5 C6 C7 C8

* * *

(c) #enlargements#, pursuant to the Quality Housing Program, of #single-# or #two-family residences# by 20 percent or more;

(d) #conversions# of 20 percent or more of the #floor area# of a ~~non-#residential~~ #building# to a #residential use#; or

(e) construction of a detached garage that is 400 square feet or greater.

The #street# frontage used to calculate the number of required trees may exclude the #street# frontage occupied by curb cuts serving #uses# listed in Use Groups 16B, 16C and 16D.

33-10
FLOOR AREA REGULATIONS

* * *

33-12
Maximum Floor Area Ratio

C1 C2 C3 C4 C5 C6 C7 C8

In all districts, as indicated, for ~~any #building# on~~ any #zoning lot#, the maximum #floor area ratio# shall not exceed the #floor area ratio# set forth in this Section, except as otherwise provided in the following Sections:

Section 33-13 (Floor Area Bonus for a Public Plaza)

Section 33-14 (Floor Area Bonus for Arcades)

Section 33-15 (Floor Area Bonus for Front Yards)

Section 33-16 (Special Provisions for Zoning Lots Divided by District Boundaries)

Any given #lot area# shall be counted only once in determining the #floor area ratio#.

Except where authorized by express provisions of this Resolution, the maximum #floor area ratio# shall not exceed the amount set forth in this Section by more than 20 percent.

In addition, the following limitations on maximum permitted #floor area# shall apply:

C1-8A C1-8X C1-9A C2-7A C2-7X C2-8A C4-6A C4-7A C5-1A C5-2A C6-2A C6-3A C6-3D C6-3X C6-4A

(a) In contextual Commercial Districts

In the districts indicated, and in C1 and C2 Districts mapped within R9A, R9D, R9X, R10A or R10X Districts, no #floor area# bonuses are permitted.

(b) In Community Board 7, Borough of Manhattan

Within the boundaries of Community Board 7 in Manhattan, ~~all #developments# or #enlargements# located~~ in R10 equivalent #Commercial Districts# without a letter suffix, ~~shall be limited to a~~ the maximum #floor area ratio# ~~of~~ shall not exceed 10.0

(c) In C6-1A Districts

In C6-1A Districts, the maximum #floor area ratio# shall not exceed the amount set forth in this Section by more than 50 percent.

(d) In C6-4X Districts

In C6-4X Districts, a #floor area# bonus shall only be permitted for a #public plaza# pursuant to Section 33-13.

33-121
In districts with bulk governed by Residence District bulk regulations

C1-1 C1-2 C1-3 C1-4 C1-5 C2-1 C2-2 C2-3 C2-4 C2-5

In the districts indicated, for a #zoning lot# containing a #commercial# or #community facility use#, the maximum #floor area ratio# ~~for a #commercial# or #community facility building#~~ is determined by the #Residence District# within which such #Commercial District# is mapped and shall not exceed the maximum #floor area ratio# set forth in the following table:

MAXIMUM FLOOR AREA RATIO

District	A For #Zoning Lots# Containing Only #Commercial ~~Buildings~~ Use#	B For #Zoning Lots# Containing Only #Community Facility ~~Buildings~~ Use#	C For ~~#Buildings#~~ #Zoning Lots# ~~Used for~~ Containing Both #Commercial# and #Community Facility Uses#
R1 R2	1.00	0.50	1.00
R3-1 R3A R3X	1.00	1.00	1.00
R3-2	1.00	1.60	1.60
R4 R5	1.00	2.00	2.00
R5D R6B	2.00	2.00	2.00
R6A R7B	2.00	3.00	3.00
R7A R8B	2.00	4.00*	4.00
R7D	2.00	4.20	4.20
R6 R7-1	2.00	4.80	4.80
R7X	2.00	5.00	5.00
R7-2 R8	2.00	6.50	6.50
R8X	2.00	6.00	6.00
R9	2.00	10.00	10.00
R9A	2.00	7.50	7.50
R9D	2.00	9.00	9.00
R9X	2.00	9.00	9.00
R10	2.00	10.00	10.00

* In R8B Districts, within the boundaries of Community Board 8 in the Borough of Manhattan, the maximum #floor area ratio# on a #zoning lot# containing #community facility uses# exclusively shall not exceed 5.10.

~~In #buildings#~~ For #zoning lots# containing ~~used for~~ both #commercial uses# and #community

facility uses#, the total #floor area# used for #commercial uses# shall not exceed the amount permitted for #zoning lots# containing only #commercial ~~buildings~~ uses# set forth in Column A.

In C1 and C2 Districts mapped within R1 and R2 Districts, the maximum #floor area ratio# for #community facility uses# ~~in~~ on a ~~#building~~ ~~used for~~ #zoning lot# containing both #commercial uses# and ~~for~~ #community facility uses# is 0.50 unless it is increased pursuant to the special permit provisions of Section 74-901 (Certain community facility uses in R1 and R2 Districts and certain Commercial Districts.)

In C1 and C2 Districts mapped within R3, R4, R5, R6, R7, R8 and R9 Districts, for any #zoning lot# containing nursing homes, health-related facilities, domiciliary care facilities for adults, sanitariums and philanthropic or non-profit institutions with sleeping accommodations, the total #floor area# ~~used~~ for all such #community facility uses# shall not exceed the amount as set forth in paragraph (b) of Section 24-111 unless modified pursuant to Section 74-902.

The maximum #floor area ratio# for any ~~#building#~~ #zoning lot# used partly for #commercial uses# and partly for nursing homes, health-related facilities, domiciliary care facilities for adults, sanitariums and philanthropic or non-profit institutions with sleeping accommodations shall not exceed the amount permitted for a #zoning lot# containing #commercial ~~building~~ uses# as set forth in Column A ~~by the applicable district regulations~~. However, for the districts in which the allowable #floor area ratio#, as set forth in paragraph (b) of Section 24-111, exceeds the amount permitted for a #zoning lot# containing #commercial ~~building~~ uses#, as set forth in Column A, the provisions of paragraph (b) of Section 24-111 shall be used to compute the maximum #floor area# permissible for the ~~#building~~ zoning lot# unless modified pursuant to Section 74-902.

33-122
Commercial buildings in all other Commercial Districts

C1-6 C1-7 C1-8 C1-9 C2-6 C2-7 C2-8 C3 C4 C5 C6 C7 C8

In the districts indicated, the maximum #floor area ratio# for a #zoning lot# containing only #commercial ~~building~~ uses# shall not exceed the #floor area ratio# set forth in the following table:

* * *

33-123
Community facility buildings or buildings used for both community facility and commercial uses in all other Commercial Districts

C1-6 C1-7 C1-8 C1-9 C2-6 C2-7 C2-8 C3 C4 C5 C6 C8

In the districts indicated, the maximum #floor area ratio# for a #zoning lot# containing #community facility ~~building~~ uses#, or for a ~~#building~~ zoning lot# ~~used for~~ containing both #commercial# and #community facility uses#, shall not exceed the #floor area ratio# set forth in the following table:

* * *

~~In #buildings# used for~~ For #zoning lots# containing both #commercial uses# and #community facility uses#, the total #floor area# used for #commercial uses# shall not exceed the amount permitted for #zoning lots# containing only #commercial ~~buildings~~ uses# in Section 33-122.

In all #Commercial Districts# except C7 and C8 Districts, for any #zoning lot# containing nursing homes, health-related facilities, domiciliary care facilities for adults, sanitariums and philanthropic or non-profit institutions with sleeping accommodations, the total #floor area# used for the #community facility use# shall not exceed the amount as set forth in paragraph (b) of Section 24-111 (Maximum floor area ratio for certain community facility uses), applying the equivalent #Residential District# (indicated in Section 34-112) for the #Commercial District# in which such #use# is located unless modified pursuant to Section 74-902.

The maximum #floor area ratio# for any ~~#building#~~ #zoning lot# used partly for #commercial uses# and partly for nursing homes, health-related facilities, domiciliary care facilities for adults, sanitariums and philanthropic or non-profit institutions with sleeping accommodations shall not exceed the amount permitted for a #zoning lot# containing #commercial ~~building~~ uses# by the applicable district regulations. However, for the districts in which the allowable #floor area ratio#, as set forth in paragraph (b) of Section 24-111, exceeds the amount permitted for a #zoning lot# containing #commercial ~~building~~ uses#, the provisions of paragraph (b) of Section 24-111 shall be used to compute the maximum #floor area# permissible for the ~~#building~~ zoning lot# unless modified pursuant to Section 74-902.

* * *

33-13
Floor Area Bonus for a Public Plaza

C1-8 C1-9 C2-7 C2-8

(a) ~~#C~~ #Zoning lots# containing #community facility ~~buildings~~ uses#

In the districts indicated, and in other C1 or C2 Districts when mapped within R9 or R10 Districts, for #zoning lots# containing #community facility ~~buildings~~ uses#, for each square foot of #public plaza ~~developed#~~ provided in accordance with Section 37-70, inclusive, the total #floor area# permitted on that #zoning lot# under the provisions of Section 33-12 (Maximum Floor Area Ratio) for a #zoning lot# containing only #community facility ~~building~~ uses# or ~~a #building# used for~~ both #commercial# and #community facility uses# may be increased by six square feet.

C4-7 C5-2 C5-3 C5-4 C5-5 C6-1 C6-2 C6-3 C6-4 C6-5 C6-6 C6-7 C6-8 C6-9

(b) ~~#C~~ #Zoning lots# containing only #commercial ~~buildings~~ uses#

In the districts indicated, for #zoning lots# containing only #commercial ~~buildings~~ uses#, for each square foot of #public plaza ~~developed#~~ provided in accordance with Section 37-70, inclusive, the total #floor area# permitted on that #zoning lot# under the provisions of Section 33-12 for ~~a~~ #commercial ~~building~~ uses# may be increased as set forth in the following table:

* * *

C4-6 C4-7 C5-1 C5-2 C5-3 C5-4 C6-1 C6-2 C6-3 C6-4 C6-5 C6-6 C6-7 C6-8 C6-9

(c) #Zoning lots# containing ~~C~~ #community facility ~~buildings~~ uses# or ~~#buildings# used for~~ both #commercial# and #community facility uses#

In the districts indicated, for #zoning lots# containing only #community facility ~~buildings~~ uses# or ~~#buildings# used for~~ both #commercial# and #community facility uses#, for each square foot of #public plaza ~~developed#~~ provided in accordance with Section 37-70, inclusive, the total #floor area# permitted on that #zoning lot# under the provisions of Section 33-12 may be increased as set forth in the following table:

* * *

33-14
Floor Area Bonus for Arcades

C4-7 C5-2 C5-3 C5-4 C5-5 C6

(a) In the districts indicated, for #zoning lots# containing #commercial ~~buildings~~ uses#, for each square foot of #arcade# provided on a #zoning lot# in accordance with the provisions of Section 37-80 (ARCADES), the total #floor area# permitted on that #zoning lot# under the provisions of Section 33-12 (Maximum Floor Area Ratio) for a

#zoning lot# containing only #commercial ~~building~~ uses# may be increased as set forth in the following table:

* * *

C1-8 C1-9 C2-7 C2-8 C4-6 C4-7 C5 C6

(b) In the districts indicated, and in C1 or C2 Districts when mapped within an R9 or R10 District, for #zoning lots# containing #community facility ~~buildings~~ uses#, for each square foot of #arcade# provided on a #zoning lot# in accordance with the provisions of Section 37-80, the total #floor area# permitted on that #zoning lot# under the provisions of Section 33-12 for a #zoning lot# containing only ~~a~~ #community facility ~~building~~ uses# or ~~a #building# used for~~ both #commercial# and #community facility uses# may be increased as set forth in the following table:

* * *

33-15
Floor Area Bonus for Front Yards

33-151
In districts with bulk governed by Residence District bulk regulations

C1-1 C1-2 C1-3 C1-4 C1-5 C2-1 C2-2 C2-3 C2-4 C2-5

In the districts indicated, when mapped within an R1, R2, R3, R4 or R5 District, except R5D Districts, on any #zoning lot# on which there are provided #yards# as set forth in this Section, the maximum #floor area ratio# set forth in Section 33-12 (Maximum Floor Area Ratio) for a #zoning lot# containing only #community facility ~~building~~ uses# or ~~a #building# used partly for~~ both #commercial ~~use~~# and ~~partly for~~ #community facility uses#, may be increased to the #floor area ratio# set forth in the following table provided that:

(a) on #interior lots#, a #front yard# not less than 30 feet in depth is provided;

(b) on #corner lots#, two #front yards#, each not less than 20 feet in depth, are provided; or

(c) on #through lots#, a #front yard# not less than 30 feet in depth is provided along each #front lot line#.

* * *

33-20
YARD REGULATIONS

Definitions and General Provisions

* * *

33-23
Permitted Obstructions in Required Yards or Rear Yard Equivalents

In all #Commercial Districts#, the following ~~shall not be considered~~ obstructions shall be permitted when located within a required #yard# or #rear yard equivalent#:

(a) In any #yard# or #rear yard equivalent#:

Arbors or trellises;

Awnings or canopies;

Chimneys, projecting not more than three feet into, and not exceeding two percent of the area of, the required #yard# or #rear yard equivalent#;

Eaves, gutters or downspouts, projecting into such #yard# or #rear yard equivalent# not more than 16 inches or 20 percent of the width of such #yard# or #rear yard equivalent#, whichever is the lesser distance;

Fences;

Flagpoles;

Parking spaces for automobiles or bicycles, off-street, open, #accessory#;

Steps and ramps for persons with physical disabilities;

Terraces or porches, open;

Walls, not exceeding eight feet in height and not roofed or part of a #building#;

(b) In any #rear yard# or #rear yard equivalent#:

* * *

33-29
Special Provisions Applying along District Boundaries

C1 C2 C3 C4 C5 C6 C7 C8

* * *

~~**33-294**~~
~~**Other special provisions along certain district boundaries**~~

~~C1-6A C1-7A C1-8A C1-9A C2-6A C2-7A C2-7X C2-8A C4-2A C4-3A C4-4A C4-4D C4-5A C4-5D C4-5X C4-6A C4-7A C5-1A C5-2A C6-2A C6-3A C6-3X C6-4A C6-4X~~

~~In the districts indicated, and in C1 and C2 Districts mapped within R6A, R7A, R7B, R7D, R7X, R8A, R8B, R8X, R9A, R9X, R10A or R10X Districts, the #development# or #enlargement# of a #building#, or portions thereof, within 25 feet of an R1, R2, R3, R4, R5 or R6B District shall comply with the requirements for R6B Districts in Section 23-633 (Street wall location and height and setback regulations in certain districts).~~

* * *

33-40
HEIGHT AND SETBACK REGULATIONS

Definitions and General Provisions

* * *

33-42
Permitted Obstructions

In all #Commercial Districts#, the following ~~shall not be considered~~ obstructions shall be permitted and may thus penetrate a maximum height limit or ~~#front# or #rear~~ sky exposure planes# as set forth in Sections 33-43 (Maximum Height of Walls and Required Setbacks), 33-44 (Alternate Front Setbacks) or 33-491 (Limited Height Districts):

(a) Balconies, unenclosed, subject to the provisions of Section 24-165;

(b) Chimneys or flues, with a total width not exceeding 10 percent of the #aggregate width of street walls# of a #building# at any given level;

(c) Elevator or stair bulkheads, roof water tanks or cooling towers (including enclosures), each having an #aggregate width of street walls# equal to not more than 30 feet. However, the product, in square feet, of the #aggregate width of street walls# of such obstructions facing each #street# frontage, times their average height, in feet, shall not exceed a figure equal to four times the width, in feet, of the #street wall# of the #building# facing such frontage. For the purposes of this paragraph (c), #abutting buildings# on a single #zoning lot# may be considered to be a single #building#;

(d) Flagpoles or aerials;

(e) House of worship towers, ornamental, having no #floor area# in portion of tower penetrating such height limit or #sky exposure plane#;

(f) Parapet walls, not more than four feet high;

(g) Spires or belfries;

(h) Wire, chain link or other transparent fences.

(i) Building columns having an aggregate width equal to not more than 20 percent of the #aggregate width of street walls# of a #building# are a permitted obstruction, to a depth not exceeding 12 inches, in an #initial setback distance#, optional front open area, or any other required setback distance or open area set forth in Sections 33-43, 33-44 or 33-45 (Tower Regulations).

33-43
Maximum Height of Walls and Required Setbacks

C1 C2 C3 C4 C5 C6 C7 C8

In all districts, as indicated, if the front wall or other portion of a #building or other structure# is located at the #street line# or within the #initial setback distance# set forth in this Section, the height of such front wall or other portion of a #building or other structure# shall not exceed the maximum height above #curb level# set forth in this Section. Above such specified maximum height and beyond the #initial setback distance#, the #building or other structure# shall not penetrate the #sky exposure plane# set forth in this Section. The regulations of this Section shall apply except as otherwise provided in Sections 33-42 (Permitted Obstructions), 33-44 (Alternate Front Setbacks), 33-45 (Tower Regulations), 33-49 (Special Height Limitations), inclusive, 74-85 (Height and Setback Regulations for Residential Buildings), or 85-04 (Modifications of Bulk Regulations) ~~or 23-692 (Height limitations for narrow buildings or enlargements)~~.

33-431
In C1 or C2 Districts with bulk governed by surrounding Residence District

C1-1 C1-2 C1-3 C1-4 C1-5 C2-1 C2-2 C2-3 C2-4 C2-5

(a) In the districts indicated, the maximum height of a front wall and the required front setback of a #building or other structure# shall be determined by the #Residence District# within which such #Commercial District# is mapped and, except as otherwise set forth in this Section, shall be as set forth in the following table:

MAXIMUM HEIGHT OF
FRONT WALL AND REQUIRED FRONT SETBACKS

#Initial Setback Distance# (in feet)		Maximum Height of a Front Wall or other portion of a #Building or other structure# within the #Initial Setback Distance#	Height above the #Street Line# (in feet)	#Sky Exposure Plane# Slope over #Zoning Lot# (Expressed as a Ratio of Vertical Distance to Horizontal Distance)			
				On #Narrow Street#		On #Wide Street#	
On #Narrow Street#	On #Wide Street#			Vertical Distance	Horizontal Distance	Vertical Distance	Horizontal Distance
When mapped within R1, R2, R3, R4, R5, R5A or R5B Districts							
20	15	30 feet or two #stories#, whichever is less	30	1	to 1	1	to 1
When mapped within R6 or R7 Districts							
20	15	60 feet or four #stories#, whichever is less	60	2.7	to 1	5.6	to 1
When mapped within R8, R9 or R10 Districts							
20	15	85 feet or six #stories#, whichever is less	85	2.7	to 1	5.6	to 1

* * *

33-432
In other Commercial Districts

C1-6 C1-7 C1-8 C1-9 C2-6 C2-7 C2-8 C3 C4 C5 C6 C7 C8

(a) In the districts indicated, the maximum height of a front wall and the required front setback of a #building or other structure#, except as otherwise set forth in this Section, shall be as set forth in the following table:

MAXIMUM HEIGHT OF
FRONT WALL AND REQUIRED FRONT SETBACKS

Maximum Height of a Front Wall or other portion of a	#Sky Exposure Plane# Slope over #Zoning Lot# (Expressed as a Ratio of Vertical Distance to Horizontal

#Initial Setback Distance# (in feet)		#Building or other structure# within the #Initial Setback Distance#	Height above the #Street Line# (in feet)	Distance)			
				On #Narrow Street#		On #Wide Street#	
On #Narrow Street#	On #Wide Street#			Vertical Distance	Horizontal Distance	Vertical Distance	Horizontal Distance
Districts: C3 C4-1 C8-1							
20	15	30 feet or two #stories#, whichever is less	30	1	to 1	1	to 1
Districts: C1-6 C2-6 C4-2 C4-3 C4-4 C4-5 C7 C8-2 C8-3							
20	15	60 feet or four #stories#, whichever is less	60	2.7	to 1	5.6	to 1
Districts: C1-7 C1-8 C1-9 C2-7 C2-8 C4-2F C4-6 C4-7 C5 C6 C8-4							
20	15	85 feet or six #stories#, whichever is less	85	2.7	to 1	5.6	to 1

* * *

33-433
Special height and setback regulations

(a) Within the boundaries of Community District 7 in the Borough of Manhattan, all ~~#developments# or #enlargements~~ buildings or other structures# located in R10 equivalent #Commercial Districts# without a letter suffix shall comply with the requirements of Section 23-634 (Special height and setback regulations in R10 Districts within Community District7, Borough of Manhattan).

(b) In C1 or C2 Districts mapped within R5D Districts, all ~~#developments# or #enlargements~~ buildings or other structures# shall comply with the height and setback requirements of Section 23-60.

33-44
Alternate Front Setbacks

C1 C2 C3 C4 C5 C6 C7 C8

In all districts as indicated, if an open area is provided along the full length of the #front lot line# with the minimum depth set forth in this Section, the provisions of Section 33-43 (Maximum Height of Walls and Required Setbacks) shall not apply. The minimum depth of such open area shall be measured perpendicular to the #front lot line#. However, in such instances, except as otherwise provided in Sections 33-42 (Permitted Obstructions), 33-45 (Tower Regulations) or 85-04 (Modifications of Bulk Regulations), no #building or other structure# shall penetrate the alternate #sky exposure plane# set forth in this Section, and the #sky exposure plane# shall be

measured from a point above the #street line#.

If the open area provided under the terms of this Section is a #public plaza#, such open area may be counted for the bonus provided for a #public plaza# in the districts indicated in Section 33-13 (Floor Area Bonus for a Public Plaza).

~~In C1-8, C1-9, C2-7 or C2-8 Districts, or in C1 or C2 Districts mapped within R9 or R10 Districts, the provisions of this Section shall be inapplicable to any #development# or #enlargement# with more than 25 percent of its total #floor area# in #residential use#.~~

* * *

33-442
In other Commercial Districts

C1-6 C1-7 C1-8 C1-9 C2-6 C2-7 C2-8 C3 C4 C5 C6 C7 C8

In the districts indicated, the alternate front setback regulations applicable to a #building or other structure# shall be as set forth in the following table:

* * *

However, in accordance with the provisions of Section 32-42 (Location within Buildings), in C1, C2 or C3 Districts, no #commercial building# or portion thereof occupied by ~~non-#residential~~ #uses# listed in Use Group 6A, 6B, 6C, 6F, 7, 8, 9 or 14 shall exceed in height 30 feet or two #stories#, whichever is less.

In C4-1 or C8-1 Districts, for #community facility buildings# or #buildings# used for both #community facility use# and #commercial use#, the maximum height above #street line# shall be 35 feet or three #stories#, whichever is less.

* * *

33-45
Tower Regulations

33-451
In certain specified Commercial Districts

C4-7 C5-2 C5-3 C5-4 C5-5 C6-4 C6-5 C6-6 C6-7 C6-8 C6-9

In the districts indicated, any #buildings# or portions thereof which in the aggregate occupy not more than 40 percent of the #lot area# of a #zoning lot# or, for #zoning lots# of less than 20,000 square feet, the percent set forth in Section 33-454 (Towers on small lots), may penetrate an established #sky exposure plane#. (Such #building# or portion thereof is hereinafter referred to as a tower.) At any given level, except where the provisions set forth in Section 33-455 (Alternate regulations for towers on lots bounded by two or more streets), or Section 33-456 (Alternate setback regulations on lots bounded by two or more streets), or Section 33-457 (Tower setbacks on narrow blocks), are applicable and where the option is taken to be governed by such provisions, such tower may occupy any portion of the #zoning lot# not located less than 15 feet from the #street line# of a #narrow street#, or less than 10 feet from the #street line# of a #wide street#, provided that the aggregate area so occupied within 50 feet of a #narrow street# shall not exceed 1,875 square feet and the aggregate area so occupied within 40 feet of a #wide street# shall not exceed 1,600 square feet.

If all of the #buildings# on a #zoning lot# containing ~~of which~~ such tower ~~is a portion does~~ do not occupy at any level more than the maximum percent of the #lot area# set forth in this Section or Section 33-454 for towers, the tower may occupy any portion of the #zoning lot# ~~not~~ located ~~less than~~ 20 feet or more from the #street line# of a #narrow street# or ~~less than~~ 15 feet or more from the #street line# of a #wide street#, provided that the aggregate area so occupied within 50

feet of a #narrow street# shall not exceed 2,250 square feet and the aggregate area so occupied within 40 feet of a #wide street# shall not exceed 2,000 square feet.

Unenclosed balconies, subject to the provisions of Section 24-165 (Balconies in R3 through R10 Districts), are permitted to project into or over open areas not occupied by towers.

* * *

33-455
Alternate regulations for towers on lots bounded by two or more streets

C5-3 C5-5 C6-6 C6-7 C6-9

In the districts indicated, if a #zoning lot# is bounded by at least two #street lines#, a tower may occupy the percent of the #lot area# of a #zoning lot# set forth in this Section, provided that, except as otherwise set forth in Section 33-457 (Tower setbacks on narrow blocks), all portions of any #building# or #buildings# on such #zoning lot#, including such tower, are set back from #street lines# as required in this Section.

(a) The maximum percent of #lot area# that may be occupied by such tower, shall be the sum of 40 percent plus one-half of one percent for every .10 by which the #floor area ratio# of such ~~#building#~~ #zoning lot# is less than the #floor area ratio# permitted under the provisions of Sections 33-12 (Maximum Floor Area Ratio), 33-13 (Floor Area Bonus for a Public Plaza) or 33-14 (Floor Area Bonus for Arcades). The maximum #lot coverage# for any tower built under the provisions of this Section or for any #building# or #buildings# on any #zoning lot# occupied by such tower shall be 55 percent of the #lot area# of such #zoning lot#.

(b) At all levels, including ground level, such #building# shall be set back from the #street line# as follows:

* * *

33-456
Alternate setback regulations on lots bounded by two or more streets

C5-3 C5-5 C6-6 C6-7 C6-9

In the districts indicated, except as otherwise set forth in Section 33-457 (Tower setbacks on narrow blocks), if a #zoning lot# is bounded by at least two #street lines#, a tower occupying not more than the percent of #lot area# set forth in Section 33-451 (In certain specified Commercial Districts) or 33-454 (Towers on small lots), may be set back from a #street line# as follows:

(a) On #narrow streets#, by a distance equal to at least the fraction of the #aggregate width of street walls# of the tower, the numerator of which fraction is one and the denominator of which fraction is the sum of 3.0 plus .0333 for each .10 by which the #floor area ratio# of the ~~#building#~~ #zoning lot# is less than the #floor area ratio# permitted under the provisions of Sections 33-12, 33-13 or 33-14, provided that such fraction shall be no less than one-fifth, and provided further that such setback need not exceed 45 feet.

(b) On #wide streets#, by a distance equal to at least the fraction of the #aggregate width of street walls# of the tower, the numerator of which fraction is one and the denominator of which fraction is the sum of 4.0 plus .05 for each .10 by which the #floor area ratio# of the ~~#building#~~ #zoning lot# is less than the #floor area ratio# permitted under the provisions of Sections 33-12, 33-13 or 33-14, provided that such fraction shall be no less than one-seventh, and provided further that such setback need not exceed 35 feet.

(c) Notwithstanding any other provisions set forth in this Section, no tower built under the provisions of this Section shall be set back less than 25 feet from the #street line# on #narrow streets# or less than 15 feet from the #street line# on #wide streets#.

* * *

~~**Regulations Applying in Special Districts**~~

33-46
Special Provisions for Zoning Lots Directly Adjoining Public Parks

C1 C2 C3 C4 C5 C6 C7 C8

In all districts, as indicated, a #public park# with an area between one and fifteen acres shall be considered a #wide street# for the purpose of applying the front height and setback regulations specified in Section 33-43 (Maximum Height of Walls and Required Setbacks) to any #building or other structure# on a #zoning lot# adjoining such #public park#. However, this Section shall not apply to a #public park# more than 75 percent of which is paved.

* * *

33-49
Special Height and Setback Limitations

* * *

33-492
Height limitations for narrow buildings or enlargements

C1-6 C1-7 C1-8 C1-9 C2-6 C2-7 C2-8 C4-4D C4-5D C4-5X C4-6A C4-7A C5-1A C5-2A C6-2A C6-3A C6-3D C6-3X C6-4A C6-4X

In the districts indicated, and in C1 and C2 Districts mapped within R7-2, R7D, R7X, R8, R9 and R10 Districts, ~~if the width of the #street wall# of a new #building# or the #enlarged# portion of an existing #building# is 45 feet or less,~~ the provisions of Section 23-692 (Height limitations for narrow buildings or enlargements) shall apply to portions of #buildings# with #street walls# less than 45 feet in width ~~such new or #enlarged building#~~.

33-493
Special provisions along certain district boundaries

C1-6A C1-7A C1-8A C1-9A C2-6A C2-7A C2-7X C2-8A C4-2A C4-3A C4-4A C4-4D C4-5A C4-5D C4-5X C4-6A C4-7A C5-1A C5-2A C6-2A C6-3A C6-3D C6-3X C6-4A C6-4X

In the districts indicated, and in C1 and C2 Districts mapped within R6A, R7A, R7B, R7D, R7X, R8A, R8B, R8X, R9A, R9D, R9X, R10A or R10X Districts, the #development# or #enlargement# of a #building#, or portion thereof, within 25 feet of an R1, R2, R3, R4, R5 or R6B District shall comply with the requirements for R6B Districts in Section 23-633 (Street wall location and height and setback regulations in certain districts).

* * *

Article III
Chapter 4
Bulk Regulations for Residential Buildings in Commercial Districts

34-00
APPLICABILITY AND DEFINITIONS

34-01
Applicability of this Chapter

The #bulk# regulations of this Chapter apply to any #zoning lot# containing only #residential buildings# ~~located on any #zoning lot# or portion of a #zoning lot#~~ in any #Commercial District# in which such #buildings# ~~is~~ are permitted. Where a #residential building# and one or more #buildings# containing non-#residential uses# are on a single #zoning lot#, the #bulk# regulations of Article III, Chapter 5 shall apply. In addition, the #bulk# regulations of this Chapter or of specified Sections thereof also apply in other provisions of this Resolution where they are incorporated by cross reference.

However, in C3A Districts, the #bulk# regulations of this Chapter shall not apply to any #residential building#. In lieu thereof, the #bulk# regulations for R3A Districts of Article II, Chapter 3 (Bulk Regulations for Residential Buildings in Residence Districts), shall apply to #residential buildings#.

Existing #buildings or other structures# that do not comply with one or more of the applicable #bulk# regulations are #non-complying buildings or other structures# and are subject to the regulations set forth in Article V, Chapter 4.

Special regulations applying only in Special Purpose Districts are set forth in Articles VIII, IX, X, XI and XII.

All C6-1A Districts shall comply with the regulations of C6-1 Districts except as set forth in Section 34-112.

In Manhattan Community Districts 1, 2, 3, 4, 5 and 6, Brooklyn Community Districts 1, 2, 6 and 8, and Queens Community Districts 1 and 2, the #conversion# ~~to #dwelling units#~~ of non-#residential floor area ~~buildings#~~ to #residences#~~, or portions thereof,~~ in #buildings# erected prior to December 15, 1961 or January 1, 1977, as applicable, shall be subject to the provisions of Article 1, Chapter 5 (Residential Conversions ~~of~~ within Existing ~~Non-Residential~~ Buildings), unless such #conversions# meet the requirements for ~~new~~ #residential development# of Article II (Residence District Regulations).

Special regulations applying in the #waterfront area# are set forth in Article VI, Chapter 2.

34-011
Quality Housing Program

In C1 and C2 Districts mapped within #Residence Districts# with a letter suffix, and in C1-6A, C1-7A, C1-8A, C1-8X, C1-9A, C2-6A, C2-7A, C2-7X, C2-8A, C4-2A, C4-3A, C4-4A, C4-4D, C4-5A, C4-5D, C4-5X, C4-6A, C4-7A, C5-1A, C5-2A, C6-2A, C6-3A, C6-3D, C6-3X, C6-4A or C6-4X Districts, #residential buildings# shall comply with all of the requirements of Article II, Chapter 8 (Quality Housing Program).

In the above listed districts without a letter suffix and in C5-2, C5-3, C5-4, C5-5, C6-1, C6-1A, C6-4, C6-5, C6-6, C6-7, C6-8 or C6-9 Districts, the #bulk# regulations applicable to #Quality Housing ~~#developments~~ buildings# may, as an alternative, be applied under the same conditions set forth in Sections 23-011 and 34-112. In addition, all #Quality Housing ~~#~~buildings# shall comply with Section 34-233 (Special provisions applying along district boundaries).

* * *

34-10
APPLICABILITY OF RESIDENCE DISTRICT BULK REGULATIONS

34-11
General Provisions

C1 C2 C3 C4 C5 C6

In the districts indicated, the #bulk# regulations ~~for #residential buildings# set forth in~~ of Article II, Chapter 3, shall apply to all #residential buildings# in accordance with the provisions of this Section, except as modified by the provisions of Sections 34-21 to 34-24, inclusive, relating to Exceptions to Applicability of Residence District Controls.

* * *

34-20
EXCEPTIONS TO APPLICABILITY OF RESIDENCE DISTRICT CONTROLS

* * *

34-22
Modification of Floor Area and Open Space Regulations

* * *

34-221
Maximum floor area ratio

C1 C2 C3 C4 C5 C6

In the districts indicated, the maximum #floor area ratio# on a #zoning lot# ~~for a #residential building#~~ shall be the applicable maximum #floor area ratio# permitted ~~for #residential buildings# under~~ pursuant to the provisions of Article II, Chapter 3, except as provided for in the following Sections:

Section 34-223 (Floor area bonus for a public plaza)

Section 34-224 (Floor area bonus for an arcade)

Section 34-225 (Floor area increase for Inclusionary Housing in C4-7 Districts within Community District 7, Borough of Manhattan).

* * *

34-223
Floor area bonus for a public plaza

C4-6 C4-7 C5 C6-4 C6-5 C6-6 C6-7 C6-8 C6-9

In the districts indicated, except for #Quality Housing buildings ~~developed# pursuant to the Quality Housing Program~~, for each square foot of #public plaza~~ developed#~~ provided in accordance with the provisions of Section 37-70, inclusive, the total #floor area# permitted on that #zoning lot# under the provisions of Section 23-15 (Maximum Floor Area Ratio in R10 Districts) may be increased by six square feet.

34-224
Floor area bonus for an arcade

C4-6 C4-7 C5-1 C5-2 C5-4 C6-4 C6-5 C6-8

In the districts indicated, except for #Quality Housing buildings# ~~developed# pursuant to the Quality Housing Program~~, for each square foot of #arcade ~~developed~~# provided in accordance with the provisions of Section 37-80 (ARCADES), the total #floor area# permitted on that #zoning lot# under the provisions of Section 23-15 (Maximum Floor Area Ratio in R10 Districts) may be increased by three square feet.

* * *

34-23
Modifications of Yard Regulations

* * *

34-233
Special provisions applying along district boundaries

C1 C2 C3 C4 C5 C6

(a) In the districts indicated, if a #Commercial District# boundary coincides with a #side lot line# of a #zoning lot# in an R1, R2, R3, R4 or R5 District and a #side lot line# of any adjoining #zoning lot# in such #Commercial District#, a #front yard# is required for any #residential building# on such #zoning lot# in the #Commercial District#. The depth of such #front yard# shall be equal to the required depth of a #front yard# in the adjacent #Residence District#.

C1 C2 C3 C4 C5 C6

(b) In the districts indicated, along such portion of the boundary of a #Commercial District# that coincides with a #side lot line# of a #zoning lot# in an R1, R2, R3, R4 or R5 District, an open area not higher than #curb level# with a width of at least eight feet is required for a #residential building# on a #zoning lot# within the #Commercial District#.

In addition, the provisions of paragraph (e) of Section 34-24 shall apply to such #building#. ~~if a #residential building# is #developed#, or #enlarged# where permitted, pursuant to the Quality Housing Program, that portion of such #building# located within 25 feet of the boundary of an R1, R2, R3, R4, R5 or R6B District shall comply with the requirements for R6B Districts in Section 23-633 (Street wall location and height and setback regulations in certain districts).~~

34-24
Modification of Height and Setback Regulations

C1 C2 C3 C4 C5 C6

In the districts indicated, the height and setback regulations set forth in Article II, Chapter 3, and made applicable to such districts in Section 34-11 (General Provisions), are modified as set forth in this Section.

C1 C2 C3 C4 C5 C6

(a) Application of sky exposure planes

In the districts indicated, except as set forth in paragraph (a) of Section 34-233 (Special provisions applying along district boundaries), no #front yard# is required for any #residential building# in a #Commercial District#. Therefore, in applying the height and setback regulations in a #Commercial District#, a #sky exposure plane# (which in a #Residence District# would be measured from a point above the #front yard line#) may be measured from a point above the #street line#. In cases where the provisions of paragraph (a) of Section 34-233 apply, the #sky exposure plane# is measured from a

point above the #front yard line#.

C1 C2

(b) When mapped within R3 or R4A Districts

In C1 or C2 Districts mapped within R3 or R4A Districts, the height and setback regulations applicable to R4 Districts, except R4A and R4B Districts, may be used for #residential buildings#.

(c) When mapped within R4, R4B or R4-1 Districts

In C1 or C2 Districts mapped within R4, R4B or R4-1 Districts, the height and setback regulations applicable to an R5B District may be used for #residential buildings#.

C4-4 C4-5 C4-2F C4-6 C4-7 C5 C6

(d) Special provisions for narrow buildings

In the districts indicated, the provisions of Section 23-692 (Height limitations for narrow buildings or enlargements) shall not apply to #buildings or other structures# ~~unless such~~ except for #Quality Housing buildings# ~~are #developed# or #enlarged# pursuant to the Quality Housing Program.~~

C1 C2 C3 C4 C5 C6

(e) Special provisions applying along district boundaries

The portion of a #Quality Housing building# located within 25 feet of the boundary of an R1, R2, R3, R4, R5 or R6B District shall comply with the requirements for R6B Districts in paragraphs (b) and (c) of Section 23-633 (Street wall location and height and setback regulations in certain districts).

Article III
Chapter 5
Bulk Regulations for Mixed Buildings in Commercial Districts

35-00
APPLICABILITY AND DEFINITIONS

35-01
Applicability of this Chapter

The #bulk# regulations of this Chapter apply to any #mixed building# located on any #zoning lot# or portion of a #zoning lot# in any #Commercial District# in which such #building# is permitted. The #bulk# regulations of this Chapter shall also apply in any #Commercial District# where there are multiple #buildings# on a single #zoning lot# and such #zoning lot# contains a #residential use# and either a #commercial use# or a #community facility use#. ~~When two or more #buildings# on a single #zoning lot# are used in any combination for #uses# which, if located in a single #building# would make it a #mixed building#, the regulations set forth in Sections 35-21 to 35-23, relating to Applicability of Residence District Bulk Regulations to Mixed Buildings, in Section 35-30 (APPLICABILITY OF FLOOR AREA AND OPEN SPACE REGULATIONS TO MIXED BUILDINGS), inclusive, and in Section 35-40 (APPLICABILITY OF DENSITY REGULATIONS TO MIXED BUILDINGS), inclusive, shall apply as if such #buildings# were a single #mixed building#.~~ In addition, the #bulk# regulations of this Chapter, or of specified Sections thereof, also apply in other provisions of this Resolution where they are incorporated by cross-reference.

* * *

In Manhattan Community Districts 1, 2, 3, 4, 5 and 6, Brooklyn Community Districts 1, 2, 6 and 8, and Queens Community Districts l and 2, the #conversion# ~~to #dwelling units#~~ of #non- # residential floor area ~~buildings#~~ to #residences#~~, or portions thereof,~~ in #buildings# erected prior to December 15, 1961 or January 1, 1977, as applicable, shall be subject to the provisions of Article I, Chapter 5 (Residential Conversion ~~of~~ within Existing ~~Non-Residential~~ Buildings), unless such #conversions# meet the requirements for ~~new~~ #residential development# of Article II (Residence District Regulations).

Special regulations applying in the #waterfront area# are set forth in Article VI, Chapter 2.

35-011
Quality Housing Program

In C1 and C2 Districts mapped within R6 through R10 Districts with a letter suffix, and in C1-6A, C1-7A, C1-8A, C1-8X, C1-9A, C2-6A, C2-7A, C2-7X, C2-8A, C4-2A, C4-3A, C4-4A, C4-4D, C4-5A, C4-5D, C4-5X, C4-6A, C4-7A, C5-1A, C5-2A, C6-2A, C6-3A, C6-3D, C6-3X, C6-4A or C6-4X Districts, any #residential# portion of a ~~#mixed~~ building# shall comply with all of the regulations of Article II, Chapter 8 (Quality Housing Program), and the entire #building # shall comply with the ~~applicable~~ provisions of ~~Article II, Chapter 8~~ Sections 28-33 (Planting Areas) and 28-50 (PARKING FOR QUALITY HOUSING). In C1 and C2 Districts mapped within R5D Districts, ~~#mixed buildings# shall comply with certain~~ only those regulations of Article II, Chapter 8, as set forth in Section 28-01 (Applicability of this Chapter) shall apply.

In the above listed districts without a letter suffix and in C5-2, C5-3, C5-4, C5-5, C6-1, C6-1A, C6-5, C6-6, C6-7, C6-8 or C6-9 Districts, the #bulk# regulations applicable to #Quality Housing ~~#developments~~ buildings# may, as an alternative, be applied to the #residential# portion of a ~~#mixed~~ building# under the same conditions set forth in Sections 23-011, 35-22 and 35-23 provided that:

(a) the entire #building# ~~is #developed# pursuant to~~ complies with the #bulk# regulations for #Quality Housing buildings# in Article III, Chapter 5 ~~for #buildings# in which the #residential# portion is #developed#, or #enlarged#~~

~~where permitted, pursuant to the Quality Housing Program~~; and

(b) the entire #building# complies with the applicable provisions of Article II, Chapter 8 (Quality Housing Program).

* * *

35-10
GENERAL PROVISIONS

Except as otherwise provided in this Chapter, the portions of a ~~#mixed~~ building# used for #residential use# are subject to the #bulk# regulations set forth in Article II, Chapter 3, and the portions of a ~~#mixed~~ building# used for #commercial# or #community facility use# are subject to the #bulk# regulations set forth in Article III, Chapter 3.

Special provisions applying to #mixed buildings# or #zoning lots# with multiple #buildings# subject to the provisions of this Chapter are set forth in Section 35-20 (APPLICABILITY OF RESIDENCE DISTRICT BULK REGULATIONS ~~TO MIXED BUILDINGS~~), inclusive, Section 35-30 (APPLICABILITY OF FLOOR AREA AND OPEN SPACE REGULATIONS ~~TO MIXED BUILDINGS~~), inclusive, Section 35-40 (APPLICABILITY OF DENSITY REGULATIONS ~~TO MIXED BUILDINGS~~), inclusive, Section 35-50 (MODIFICATIONS OF YARD REGULATIONS ~~FOR MIXED BUILDINGS~~) and Section 35-60 (MODIFICATIONS OF HEIGHT AND SETBACK REGULATIONS ~~FOR MIXED BUILDINGS~~),inclusive.

35-20
APPLICABILITY OF RESIDENCE DISTRICT BULK REGULATIONS ~~TO MIXED BUILDINGS~~

35-21
General Provisions

C1 C2 C3 C4 C5 C6

In the districts indicated, the #bulk# regulations ~~applicable to #residential buildings#~~ set forth in Article II, Chapter 3, shall apply to all #residential# portions of ~~#mixed~~ buildings# in accordance with the provisions and modifications set forth in the remaining Sections of this Chapter. The purpose of these modifications is to make the regulations set forth in Article II, Chapter 3, applicable to ~~#mixed buildings# and~~ #Commercial Districts#.

35-22
Residential Bulk Regulations in C1 or C2 Districts Whose Bulk is Governed by Surrounding Residence District

C1-1 C1-2 C1-3 C1-4 C1-5 C2-1 C2-2 C2-3 C2-4 C2-5

In the districts indicated, the #bulk# regulations for the #Residence Districts# within which such #Commercial Districts# are mapped apply to #residential# portions of ~~#mixed~~ buildings#, except:

(a) when such districts are mapped within R1 or R2 Districts, the #bulk# regulations for R3-2 Districts shall apply; and

(b) when such districts are mapped within R6, R7, R8, R9 or R10 Districts, ~~and the #residential# portion of a #mixed building# is #developed# or #enlarged# pursuant to the Quality Housing Program,~~ the height and setback regulations of Sections 23-60 through 23-65, inclusive, shall not apply to #Quality Housing buildings#. In lieu thereof, Section 35-24 (Special Street Wall Location and Height and Setback Regulations in Certain Districts) shall apply ~~to such #mixed building#~~.

35-23
Residential Bulk Regulations in Other C1 or C2 Districts or in C3, C4, C5 or C6 Districts

C1-6 C1-7 C1-8 C1-9 C2-6 C2-7 C2-8 C3 C4 C5 C6

(a) In the districts indicated, the #bulk# regulations for #residential# portions of ~~#mixed~~ buildings# are the #bulk# regulations for the #Residence Districts# set forth in the following table. However, ~~where the #residential# portion of a #mixed building# is #developed# or #enlarged# pursuant to the Quality Housing Program~~ for #Quality Housing buildings#, the height and setback regulations of Sections 23-60 through 23-65, inclusive, shall not apply. In lieu thereof, Section 35-24 (Special Street Wall Location and Height and Setback Regulations in Certain Districts) shall apply ~~to such #mixed building#~~.

The provisions of Section 23-692 (Height limitations for narrow buildings or enlargements) shall not apply in C4-2F, C4-4, C4-5, C4-6, C4-7, C5 or C6 Districts, ~~unless the #residential# portion of a #mixed building# in such district is #developed# or #enlarged# pursuant to the Quality Housing Program~~ except that such provisions shall apply to #Quality Housing buildings#.

Furthermore, in C4-2 Districts in the Borough of Staten Island, the #residential# portion of a #mixed building# and #residential buildings# on #zoning lots# subject to the provisions of this Chapter shall be ~~#developed# or #enlarged# only pursuant to the Quality Housing Program~~ subject to the #bulk# regulations for #Quality Housing buildings#.

* * *

C1-6A C1-7A C1-8A C1-8X C1-9A C2-6A C2-7A C2-7X C2-8A C4-2A C4-3A C4-4A C4-4D C4-5A C4-5D C4-5X C4-6A C4-7A C5-1A C5-2A C6-2A C6-3A C6-3D C6-3X C6-4A C6-4X

(b) In the districts indicated, the #bulk# regulations for #residential# portions of ~~#mixed~~ buildings# are the #bulk# regulations for the #Residence Districts# set forth in the following table. However, the height and setback regulations of Sections 23-60 through 23-65, inclusive, shall not apply. In lieu thereof, Section 35-24 shall apply ~~to such #mixed building#~~.

* * *

35-24
Special Street Wall Location and Height and Setback Regulations in Certain Districts

C1-6A C1-7A C1-8A C1-8X C1-9A C2-6A C2-7A C2-7X C2-8A C4-2A C4-3A C4-4A C4-4D C4-5A C4-5D C4-5X C4-6A C4-7A C5-1A C5-2A C6-2A C6-3A C6-3D C6-3X C6-4A C6-4X

In the districts indicated, and in other C1 or C2 Districts when mapped within R6A, R6B, R7A, R7B, R7D, R7X, R8A, R8B, R8X, R9A, R9D, R9X, R10A or R10X Districts, for all #buildings or other structures#, and for #Quality Housing buildings# in other #Commercial Districts# ~~where the #residential# portion of a #mixed building# is #developed# or #enlarged# pursuant to the Quality Housing Program~~, #street wall# location and height and setback regulations are set forth in this Section. The height of all #buildings or other structures# shall be measured from the #base plane#.

C1-6A C1-7A C1-8A C1-8X C1-9A C2-6A C2-7A C2-7X C2-8A C4-2A C4-3A C4-4A C4-4D C4-5A C4-5D C4-5X C4-6A C4-7A C5-1A C5-2A C6-2A C6-3A C6-3D C6-3X C6-4A C6-4X

(a) Permitted obstructions

In the districts indicated, and in other C1 or C2 Districts when mapped within R6A, R6B, R7A, R7B, R7D, R7X, R8A, R8B, R8X, R9A, R9D, R9X, R10A or R10X Districts, and

for #Quality Housing buildings# in other #Commercial Districts# ~~where the #residential# portion of a #mixed building# is #developed# or #enlarged# pursuant to the Quality Housing Program~~, the ~~permitted obstructions~~ provisions of ~~set forth in~~ Section 33-42 shall apply to any #building or other structure#. In addition, a dormer may be allowed as a permitted obstruction within a required front setback area. Such dormer may exceed ~~a~~ the maximum base height specified for such district provided that on any #street# frontage, the aggregate width of all dormers at the maximum base height does not exceed 60 percent of the ~~length~~ width of the #street wall# of the highest #story# entirely below the maximum base height. For each foot of height above the maximum base height, the aggregate width of all dormers shall be decreased by one percent of the #street wall# width of the highest #story# entirely below the maximum base height.

~~C1-6A C2-6A C4-2A C4-3A C4-4A C4-5A C4-5D C4-5X~~

(b) #Street wall# location

C1-6A C2-6A C4-2A C4-3A C4-4A C4-5A C4-5D C4-5X

(1) In the districts indicated, and in C1 or C2 Districts when mapped within R6A, R6B, R7A, R7B or R7X Districts, and for #Quality Housing buildings# in other #Commercial Districts# with a ~~#residential#~~ residential equivalent of an R6 or R7 District ~~where the #residential# portion of a #mixed building# is #developed# or #enlarged# pursuant to the Quality Housing Program~~, at least 70 percent of the #aggregate width of street walls# shall be located within eight feet of the #street line# and shall extend to at least the minimum base height specified in Table A of this Section for #buildings# in contextual districts, or Table B for #buildings# in non-contextual districts, ~~or the height of the #building#, whichever is less.~~ The remaining 30 percent of the #aggregate width of street walls# may be located beyond eight feet of the #street line#.

Existing #buildings# may be horizontally #enlarged# without regard to #street wall# location provisions, provided the amount of new #floor area# does not exceed 50 percent of the amount of #floor area# existing on June 29, 1994, and the #enlarged# portion of the #building# does not exceed one #story# or 15 feet in height, whichever is less.

For #zoning lots# bounded by more than one #street line#, these #street wall# location provisions shall be mandatory along only one #street line#~~,~~. ~~in accordance with the following rules:~~

~~(i)~~ Where only one #street line# is coincident with the boundary of a #Commercial District# mapped along an entire blockfront, the #street wall# location provisions shall apply along such coincident #street line#. For all other #zoning lots#, the #street wall# location provisions shall apply along at least one #street line#.

~~(ii) For the purposes of this Section, any building wall oriented so that lines perpendicular to it would intersect a #street line# at an angle of 65 degrees or less shall not be considered a #street wall#.~~

~~(iii) Existing #buildings# may be horizontally #enlarged# without regard to #street wall# location provisions, provided the amount of new #floor area# does not exceed 50 percent of the amount of #floor area# existing on June 29, 1994, and the #enlarged# portion of the #building# does not exceed one #story# or 15 feet in height, whichever is less.~~

C1-7A C1-8A C1-8X C1-9A C2-7A C2-7X C2-8A C4-4D C4-5D

(2) In the districts indicated, and in C1 or C2 Districts when mapped within R7D, R8A, R8B, R8X, R9A, R9D, R9X, R10A or R10X Districts, and for #Quality Housing buildings# in other C1 or C2 Districts with a ~~#residential#~~ residential equivalent of an R8, R9 or R10 District ~~where the #residential# portion of a #mixed building# is #developed# or #enlarged# pursuant to the Quality Housing~~

~~Program~~, the following #street wall# location provisions shall apply along #wide streets#, and along #narrow streets# within 50 feet of their intersection with a #wide street#:

(i) The #street wall# shall be located on the #street line# and extend along the entire #street# frontage of the #zoning lot# up to at least the minimum base height specified in Table A of this Section for #buildings# in contextual districts, or Table B for #buildings# in non-contextual districts ~~or the height of the #building#, whichever is less.~~ To allow articulation of #street walls# at the intersection of two #street lines#, the #street wall# may be located anywhere within an area bounded by the two #street lines# and a line connecting such #street lines# at points 15 feet from their intersection.

* * *

(iii) ~~For #developments# that occupy the entire #block# frontage of a #street# and provide~~ Where a continuous sidewalk widening is provided along the entire #block# frontage of a #street#~~along such #street line#~~, the boundary of the sidewalk widening shall be considered to be the #street line# for the purposes of this Section.

~~The preceding #street wall# provisions shall not apply along #narrow streets# beyond 50 feet of their intersection with a #wide street#, nor along any #street frontage# of a #zoning lot# occupied by existing #buildings#~~ No #street wall# location rules shall apply along #narrow streets# beyond 50 feet of their intersection with a #wide street#.

C4-6A C4-7A C5-1A C5-2A C6-2A C6-3A C6-3D C6-3X C6-4A C6-4X

(3) In the districts indicated, and for #Quality Housing buildings# in other C4, C5 or C6 Districts with a ~~#residential#~~ residential equivalent of an R8, R9 or R10 District ~~where the #residential# portion of a #mixed building# is #developed# or #enlarged# pursuant to the Quality Housing Program~~, the #street wall# location requirements shall be as set forth in paragraph (b)(2), inclusive, of this Section, except that a #street wall# with a minimum height of 12 feet shall be required on a #narrow street line# beyond 50 feet of its intersection with a #wide street#, and shall extend along such entire #narrow street# frontage of the #zoning lot#.

* * *

C1-6A C1-7A C1-8A C1-8X C1-9A C2-6A C2-7A C2-7X C2-8A C4-2A C4-3A C4-4A C4-4D C4-5A C4-5D C4-5X C4-6A C4-7A C5-1A C5-2A C6-2A C6-3A C6-3D C6-3X C6-4A C6-4X

(c) Setback regulations

In the districts indicated, and in C1 or C2 Districts when mapped within R6A, R6B, R7A, R7B, R7D, R7X, R8A, R8B, R8X, R9A, R9D, R9X, R10A or R10X Districts, for all #buildings#, and for #Quality Housing buildings# in other #Commercial Districts# ~~where the #residential# portion of a #mixed building# is #developed# or #enlarged# pursuant to the Quality Housing Program, all #developments# or #enlargements# shall comply with the following provisions~~ setbacks are required for all portions of #buildings or other structures# that exceed the maximum base height specified in the table in this Section. Such setbacks shall be provided in accordance with the following regulations:

* * *

(3) In C6-3D Districts, for ~~#developments# or #enlargements#~~ #buildings or other structures# on #zoning lots# that front upon an elevated rail line, at a height not lower than 15 feet or higher than 25 feet, a setback with a depth of at least 20 feet shall be provided from any #street wall# fronting on such elevated rail line, except that such dimensions may include the depth of any permitted recesses in the

#street wall# and the depth of such setback may be reduced by one foot for every foot that the depth of the #zoning lot#, measured perpendicular to the elevated rail line, is less than 110 feet, but in no event shall a setback less than 10 feet in depth be provided above the minimum base height.

(i) The setback provisions of paragraph (c) of this Section are optional ~~for such #developments# or #enlargements#~~ where a building wall is within the area bounded by two intersecting #street lines# and lines parallel to and 70 feet from such #street lines#.

(ii) Where such ~~#development# or #enlargement#~~ #building# is adjacent to a #public park#, such setback may be provided at grade for all portions of #buildings# outside of the area bounded by two intersecting #street lines# and lines parallel to and 70 feet from such #street lines#, provided that any area unoccupied by a #building# shall be improved to Department of Transportation standards for sidewalks, shall be at the same level as the adjoining public sidewalks, and shall be accessible to the public at all times.

(d) Maximum building height

No #building or other structure# shall exceed the maximum building height specified in Table A of this Section for ~~#buildings# in~~ contextual districts, or Table B for ~~#buildings# in~~ non-contextual districts, except as provided in this paragraph, (d), inclusive:

* * *

C1-6A C1-7A C1-8A C1-8X C1-9A C2-6A C2-7A C2-7X C2-8A C4-2A C4-3A C4-4A C4-4D C4-5A C4-5D C4-5X C4-6A C4-7A C5-1A C5-2A C6-2A C6-3A C6-3D C6-3X C6-4A C6-4X

(e) Additional regulations

In the districts indicated, and in C1 or C2 Districts when mapped within R6A, R6B, R7A, R7B, R7D, R7X, R8A, R8B, R8X, R9A, R9D, R9X, R10A or R10X Districts, and for #Quality Housing buildings# in other #Commercial Districts# ~~where the #residential# portion of a #mixed building# is #developed# or #enlarged# pursuant to the Quality Housing Program~~, the following additional provisions shall apply ~~to all #developments# or #enlargements#~~:

(1) Existing #buildings# may be vertically enlarged by up to one #story# or 15 feet without regard to the #street wall# location requirements of paragraph (b) of this Section.

(2) On #through lots# that extend less than 180 feet in maximum depth from #street# to #street#, the #street wall# location requirements of paragraph (b) of this Section shall be mandatory along only one #street# frontage.

(3) The #street wall# location and minimum base height provisions of paragraph (b) of this Section shall not apply along any #street# frontage of a #zoning lot# occupied by #buildings# whose #street wall# heights or widths will remain unaltered.

(4) The minimum base height provisions of paragraph (b) of this Section shall not apply to #buildings developed# or #enlarged# after (effective date of amendment) that do not exceed such minimum base heights, except where such #buildings# are located on #zoning lots# with multiple #buildings#, one or more of which is #developed#, #enlarged# or altered after (effective date of amendment) to a height exceeding such minimum base heights.

~~(3)~~(5) The City Planning Commission may, upon application, authorize modifications in the required #street wall# location of a #development# or #enlargement# if the Commission finds that existing #buildings#, or existing open areas serving

existing #buildings# to remain on the #zoning lot#, would be adversely affected by the location of the #street walls# of the #development# or #enlargement# in the manner prescribed in this Section.

~~(4)~~(6) For any #zoning lot# located in a Historic District designated by the Landmarks Preservation Commission, the minimum base height and #street wall# location regulations of this Section, or as modified in any applicable Special District, shall be modified as follows:

* * *

~~(5)~~(7) In C6-3D Districts, where a #building# on an adjacent #zoning lot# has #dwelling unit# windows located within 30 feet of a #side lot line# of the #development# or #enlargement#, an open area extending along the entire length of such #side lot line# with a minimum width of 15 feet shall be provided. Such open area may be obstructed only by the permitted obstructions set forth in Section 33-23 (Permitted Obstructions in Required Yards or Rear Yard Equivalents).

(8) For the purposes of applying the #street wall# location regulations of paragraph (b) of this Section, any building wall oriented so that lines perpendicular to it would intersect a #street line# at an angle of 65 degrees or less shall not be considered a #street wall#.

TABLE A
HEIGHT AND SETBACK FOR BUILDINGS
OR OTHER STRUCTURES
IN CONTEXTUAL DISTRICTS

District	Minimum Base Height	Maximum Base Height	Maximum Building Height
C1 or C2 mapped in R6B	30	40	50
C1 or C2 mapped in R6A C4-2A C4-3A	40	60	70
C1 or C2 mapped in R7B	40	60	75
C1 or C2 mapped in R7A C1-6A C2-6A C4-4A C4-5A	40	65	80
C1 or C2 mapped in R7D C4-5D	60	85	100
C1 or C2 mapped in R7X C4-5X	60	85	125
C1 or C2 mapped in R8B	55	60	75
C1 or C2 mapped in R8A C1-7A C4-4D C6-2A	60	85	120
C1 or C2 mapped in R8X	60	85	150
C1 or C2 mapped in R9A[2] C1-8A[2] C2-7A[2] C6-3A[2]	60	95	135
C1 or C2 mapped in R9A[1] C1-8A[1] C2-7A[1] C6-3A[1]	60	102	145
C1 or C2 mapped in R9D C6-3D	60	85[4]	--[3]
C1 or C2 mapped in R9X[2] C1-8X[2] C2-7X[2] C6-3X[2]	60	120	160
C1 or C2 mapped in R9X[1] C1-8X[1] C2-7X[1] C6-3X[1]	105	120	170
C1 or C2 mapped in R10A[2] C1-9A[2] C2-8A[2] C4-6A[2]	60	125	185

C4-7A[2] C5-1A[2] C5-2A[2] C6-4A[2]			
C1 or C2 mapped in R10A[1] C1-9A[1] C2-8A[1] C4-6A[1] C4-7A[1] C5-1A[1] C5-2A[1] C6-4A[1]	125	150	210
C1 or C2 mapped in R10X C6-4X	60	85	--[3]

---

[1] Refers to ~~that portion of a district~~ #zoning lots# or portions thereof ~~which is~~ within 100 feet of a #wide street#

[2] Refers to ~~that portion of a district~~ #zoning lots# on a #narrow street#, except portions of such #zoning lots# within a distance of 100 feet from ~~its~~ an intersection with a #wide street#

[3] #Buildings# may exceed a maximum base height of 85 feet in accordance with paragraph (d) of this Section

[4] For ~~#developments# or #enlargements#~~ #buildings or other structures# that front upon an elevated rail line, the maximum base height shall be 25 feet.

TABLE B
HEIGHT AND SETBACK FOR BUILDINGS
IN NON-CONTEXTUAL DISTRICTS

District	Minimum Base Height	Maximum Base Height	Maximum Building Height
C1 or C2 mapped in R6** C4-2** C4-3**	30	45	55
C1 or C2 mapped in R6* inside Core*** C4-2* inside Core*** C4-3* inside Core***	40	55	65
C1 or C2 mapped in R6* outside Core*** C4-2* outside Core*** C4-3* outside Core***	40	60	70
C1 or C2 mapped in R7** C1 or C2 mapped in R7* inside Core*** C1-6** C1-6* inside Core*** C2-6** C2-6* inside Core*** C4-4** C4-4* inside Core*** C4-5** C4-5* inside Core*** C6-1** C6-1* inside Core***	40	60	75
C1 or C2 mapped in R7* outside Core*** C1-6* outside Core*** C2-6* outside Core*** C4-4* outside Core*** C4-5* outside Core***	40	65	80

C6-1* outside Core***			
C1 or C2 mapped in R8** C1-7** C4-2F** C6-2**	60	80	105
C1 or C2 mapped in R8* C1-7* C4-2F* C6-2*	60	85	120
C1 or C2 mapped in R9** C1-8** C2-7** C6-3**	60	95	135
C1 or C2 mapped in R9* C1-8* C2-7* C6-3*	60	102	145
C1 or C2 mapped in R10** C1-9** C2-8** C4-6** C4-7** C5** C6-4** C6-5** C6-6** C6-7** C6-8** C6-9**	60	125	185
C1 or C2 mapped in R10* C1-9* C2-8* C4-6* C4-7* C5* C6-4* C6-5* C6-6* C6-7* C6-8* C6-9*	125	150	210

* Refers to ~~that portion of a district~~ #zoning lots# or portions thereof ~~which is~~ within 100 feet of a #wide street#

** Refers to ~~that portion of a district~~ #zoning lots# on a #narrow street#, except portions of such #zoning lots# within a distance of 100 feet from ~~its~~ an intersection with a #wide street#

*** Core refers to #Manhattan Core#.

Note: In Community District 6 in the Borough of Brooklyn, the following #streets# shall be considered #narrow streets# for the purposes of applying height and setback regulations: Second, Carroll and President Streets, between Smith and Hoyt Streets; First Place, Second Place, Third Place and Fourth Place.

35-30
APPLICABILITY OF FLOOR AREA AND OPEN SPACE REGULATIONS ~~TO MIXED BUILDINGS~~

35-31
Maximum Floor Area Ratio ~~for Mixed Buildings~~

C1 C2 C3 C4 C5 C6

In all districts, except as set forth in Section 35-311, the provisions of this Section shall apply to any #zoning lot# ~~containing a #mixed building#~~ subject to the provisions of this Chapter.

* * *

35-311
Maximum floor area ~~ratios~~ and special provisions for mixed buildings or zoning lots with multiple buildings containing community facility use in certain districts

C1 C2

In C1 and C2 Districts mapped within R6 Districts, except R6A and R6B Districts, and in R7-1 Districts, the provisions of this Section shall apply to any #zoning lot# where #residential# and #community facility uses# are located within the same #building#.

(a) For #buildings# containing #residential# and #community facility uses#, where such #buildings# have a ratio of #floor area ~~ratios#~~ in such #building# to #lot area# greater than set forth in Column A in the following table, the maximum such ratio ~~#floor area ratio#~~ for the #community facility# portions of such #buildings# shall be as set forth in Column B in the table, and the maximum such ratio ~~#floor area ratio#~~ for the #residential# portions of such #buildings# shall be as set forth in Article II, Chapter 3, subject to the limitations set forth in paragraph (d) of this Section.

	COLUMN A	COLUMN B
District	Maximum ~~#Floor Area Ratio#~~ Ratio of #Floor Area# ~~of~~ in #Building# to #Lot Area#	Maximum ~~#Floor Area Ratio#~~ Ratio of #Floor Area# ~~for~~ in #Community Facility Use# to #Lot Area#
C1 or C2 mapped in R6	2.5	1.0
C1 or C2 mapped in R7-1	3.5	1.0

(b) For #buildings# containing #residential# and #community facility uses#, where such #buildings# have a ratio of #floor area ~~ratios#~~ in such #building# to #lot area# that do not exceed the applicable ~~#floor area ratios#~~ ratio set forth in Column A in the table in paragraph (a), the maximum #floor area ratio# for the #community facility# portion of such #buildings# shall be as set forth in Article III, Chapter 3, and the maximum #floor area ratio# for the #residential# portions of such #buildings# shall be as set forth in Article II, Chapter 3, subject to the limitations set forth in paragraph (d) of this Section.

* * *

35-33
Open Space Ratio for Residential Portions of ~~Mixed~~ Buildings

C1 C2 C3 C4 C5 C6

In the districts indicated, a #zoning lot# containing a #residential building# or the #residential# portion of a #mixed building# shall have a minimum #open space ratio# as required under the provisions of Sections 35-21 to 35-23, inclusive, relating to Section 35-20 (Applicability of Residence District Bulk Regulations ~~to Mixed Buildings~~), except as otherwise provided in this Section.

For the purposes of this Section:

(a) the #floor area# counted in determining the #open space ratio# shall be only that #floor area# in the #residential# portion of the ~~#mixed~~ building#;

(b) the #lot coverage# shall be deemed to be that portion of the #zoning lot# which, when viewed directly from above, would be covered by the #residential# portion of the #building# at any level; and

(c) the applicable #height factor#, if the maximum permitted #residential floor area ratio# is less than the total #floor area ratio# permitted for such #building#, shall be the #height factor# of the #residential# portion of the ~~#mixed~~ building#.

A non-#residential use# occupying a portion of a #building# that was in existence on December 15, 1961, may be changed to a #residential use# and the regulations on minimum required #open space ratio# shall not apply to such change of #use#.

35-34
Location of Open Space ~~for Mixed Buildings~~

C1 C2 C3 C4 C5 C6

In the districts indicated, the #open space# required for a #residential building# or the #residential# portion of a #mixed building# under the provisions of Section 35-33 (Open Space Ratio for Residential Portions of ~~Mixed~~ Buildings) may be at a level higher than 23 feet above #curb level#. Such #open space# may be provided at ground floor level or upon the roof of:

(a) the non-#residential# portion of ~~such~~ a #mixed building#~~,~~ ;

(b) a #commercial building#;

(c) a #community facility building# that #abuts# such #residential building# or #residential# portion of a #mixed building#;

provided that the level of any #open space# may not be higher than two and one-half feet below the sill level of any #legally required window# opening on such roof area, in the #residential# portion of such #mixed building#. #Open space# located on the roof of a ~~separate~~ #community facility building# separated by open area from #residential# or #mixed buildings# on the same #zoning lot# may not be at a level higher than 23 feet above #curb level#.

35-341
Open space restrictions in C4-l Districts

In C4-1 Districts, for #zoning lots# having a #lot area# in excess of four acres, open off-street parking spaces which are #accessory# to #commercial uses# are not permitted obstructions within required #open space#.

In C4-1 Districts, for #zoning lots# having a #lot area# in excess of four acres, #open space# provided on the roof of a #commercial building# that would otherwise qualify as #open space# shall be subject to authorization by the City Planning Commission. In permitting such roof area to qualify as #open space#, the Commission shall find that:

(a) the location and layout of the roof area is directly accessible, useable and restricted for the ~~#residential#~~ residential occupants and their guests for whom no admission charge or membership fee is charged;

(b) such roof area ~~is #developed# with~~ contains recreational facilities, seating areas and landscaping; and

(c) all mechanical equipment or emissions therefrom are screened and no intake or exhaust duct faces directly into the #open space#.

35-35
Floor Area Bonus for a Public Plaza or Arcade ~~in Connection with Mixed Buildings~~

C1-8 C1-9 C2-7 C2-8 C4-6 C4-7 C5 C6

In the districts indicated, and in C1 and C2 Districts mapped within R9 or R10 Districts, #floor area# bonus provisions for #public plazas# and #arcades# shall apply as set forth in this Section. Any #floor area# bonus for a #public plaza# or #arcade# permitted under the applicable district regulations for any #residential#, #commercial# or #community facility# portion of a ~~#mixed~~ building# may be applied ~~to a #mixed building#~~, provided that any given #public plaza# or #arcade# shall be counted only once in determining a bonus.

* * *

C1-8 C1-9 C2-7 C2-8

(b) In the districts indicated, and in other C1 or C2 Districts when mapped within R9 or R10 Districts, the bonus provisions of Section 33-13 shall apply only to a #development# or #enlargement# with 25 percent or less of ~~its~~ the total #floor area# of the #building# in #residential use#.

C4-6 C4-7 C5-1 C5-2 C5-4 C6-4 C6-5 C6-8

(c) In the districts indicated, except C6-4X Districts, if more than 50 percent of the #floor area# on the #zoning lot# is occupied by #residential uses#, then for each square foot of #public plaza# ~~developed~~ provided in accordance with Section 37-70, inclusive, the total #floor area# permitted on that #zoning lot# under the provision of Section 23-15 (Maximum Floor Area Ratio in R10 Districts) may be increased by six square feet.

* * *

C6-4X

(f) In the district indicated, if all #dwelling units# in the #~~development~~ building# are located above a height of 60 feet above the #base plane#, then the bonus provisions of Section 33-13 shall apply.

35-351
Arcades

C1-8 C1-9 C2-7 C2-8

(a) In the districts indicated, or in C1 or C2 Districts mapped within R9 or R10 Districts, the provisions of Section 33-15 shall apply only to a #development# or #enlargement# with 25 percent or less of ~~its~~ the total #floor area# of the #building# in #residential use#.

C4-6 C4-7 C5 C6

(b) In the districts indicated, the provisions of Section 33-15 shall apply.

35-40
APPLICABILITY OF DENSITY REGULATIONS ~~TO MIXED BUILDINGS~~

C1 C2 C3 C4 C5 C6

In the districts indicated, the maximum number of #dwelling units# or #rooming units# on a #zoning lot# ~~containing a #mixed building#~~ shall equal the maximum #residential floor area# permitted for the #zoning lot# determined in accordance with the provisions set forth in Section 35-30 (APPLICABILITY OF FLOOR AREA AND OPEN SPACE REGULATIONS ~~TO MIXED BUILDINGS~~) divided by the applicable factor in Section 23-20 (DENSITY REGULATIONS).

Illustrative Examples

The following examples, although not part of the Zoning Resolution, are included to demonstrate the application of density regulations to #mixed buildings#.

* * *

For a #mixed building# where the #residential# portion is #developed# pursuant to the optional Quality Housing Program on a #wide street# in a C2 District mapped within an R7-1 District outside the #Manhattan Core#, the maximum permitted #commercial# FAR is 2.0, the maximum permitted #community facility# FAR is 4.8 (or

1.0 if the total FAR of the #mixed building# ~~on the #zoning lot#~~ exceeds 3.5), and the maximum permitted #residential# FAR is 4.0, provided the total FAR for all #uses# on the #zoning lot# does not exceed 4.8, pursuant to Section 35-30. On a 15,000 square foot #zoning lot developed# with 1.0 FAR of #commercial use# and 1.0 FAR of #community facility use#, the maximum #residential floor area ratio# permitted for such #mixed building# is 2.8. The maximum number of #dwelling units# permitted on the #zoning lot# is 62 (15,000 x 2.8 divided by a factor of 680, pursuant to Section 23-22).

* * *

35-50
MODIFICATION OF YARD REGULATIONS ~~FOR MIXED BUILDINGS~~

35-51
Modification of Front Yard Requirements

C1 C2 C3 C4 C5 C6

In the districts indicated, no #front yard# shall be required ~~for any #mixed building#~~, except that the provisions of paragraph (a) of Section 34-233 (Special provisions applying along district boundaries) shall apply ~~to such #mixed building#~~ when #residential uses# are located on the first #story# of ~~such~~ a #building#.

35-52
Modification of Side Yard Requirements

C1 C2 C3 C4 C5 C6

In the districts indicated, except as otherwise provided in Section 35-54 (Special Provisions Applying Adjacent to R1 through R6B Districts), no #side yard# shall be required ~~for any #mixed building#~~ although, if any open area extending along a #side lot line# is provided at any level, it shall have a width of not less than eight feet.

However, in C3A Districts, #side yards# shall be provided ~~for any #mixed building#~~ in accordance with the regulations for R3A Districts as set forth in Section 23-461 (Side yards for single- or two-family residences).

35-53
Modification of Rear Yard Requirements

C1 C2 C3 C4 C5 C6

In the districts indicated, for a #residential# portion of a #mixed building#, the required #residential rear yard# ~~may~~ shall be provided at ~~any level not higher than~~ the floor level of the lowest #story# used for ~~#residential use#~~ #dwelling units# or #rooming units#, where any window of such #dwelling units# or #rooming units# faces onto such #rear yard#.

35-54
Special Provisions Applying Adjacent to R1 through ~~R6B~~ R5 Districts

~~**35-541**~~
~~**Special yard provisions**~~

C1 C2 C3 C4 C5 C6

In the districts indicated, ~~for #developments# or #enlargements#~~ on #zoning lots# adjacent to #zoning lots# in R1, R2, R3, R4 or R5 Districts, a #side yard# at least eight feet wide shall be

provided along the entire length of the common #side lot line#. Such #side yard# may be used for #accessory# parking.

~~**35-542**~~
~~**Special height and setback regulations**~~

~~C1 C2 C3 C4 C5 C6~~

~~In the districts indicated, where the #residential# portion of a #mixed building# is #developed# pursuant to R6, R7, R8 R9 or R10 District #bulk# regulations, the provisions of this Section shall apply to those portions of such #mixed buildings# located within such districts that are adjacent to and within 25 feet of a #zoning lot# located within R1, R2, R3, R4, R5 or R6B Districts.~~

~~Such portions of #development# or #enlargement# shall:~~

~~(a) not exceed a height of 35 feet where such adjoining district is an R1, R2, R3, R4 or R5 District; and~~

~~(b) comply with the height and setback regulations of an R6B District where such adjoining district is an R6B District.~~

35-60
MODIFICATION OF HEIGHT AND SETBACK REGULATIONS ~~FOR MIXED BUILDINGS~~

35-61
Height and Setback Regulations

C1 C2 C3 C4 C5 C6

In the districts indicated, height and setback regulations are modified as follows:

(a) except as otherwise provided in Section 35-51 (Modification of Front Yard Requirements), no #front yard# is required for any portion of a ~~#mixed~~ building# in a #Commercial District#. Therefore, in applying the height and setback regulations, a #sky exposure plane# (which in a #Residence District# would be measured from a point above the #front yard line#) may be measured from a point above the #street line#.

(b) In cases where the provisions of Section 34-233, paragraph (a), apply, as set forth in Section 35-51, the #sky exposure plane# is measured from a point above the #front yard line#.

(c) In C1 or C2 Districts mapped within R3 or R4A Districts, the height and setback regulations applicable to R4 Districts, except R4A and R4B Districts, may be applied ~~may be used for #mixed buildings#~~.

(d) In C1 or C2 Districts mapped within R4, R4B or R4-1 Districts, the height and setback regulations applicable to an R5B District may be applied ~~may be used for #mixed buildings#~~.

(e) In C3A Districts, the height and setback regulations applicable to R3A Districts shall apply ~~to #mixed buildings#~~.

35-62
Maximum Height of Front Wall in Initial Setback Distance

C1 C2 C3 C4 C5 C6

In the districts indicated, except in C1 or C2 districts mapped within R2A, R2X, R3, R4 or R5 districts and except in C3A Districts, the maximum height of a front wall ~~of a #mixed building#~~ within the #initial setback distance# shall be the maximum height of a front wall permitted in the applicable district for a #residential#, #commercial# or #community facility building#, whichever permits the greatest maximum height.

35-63
Special Tower Regulations for Mixed Buildings

C1 C2 C4 C5 C6

In the districts indicated, when a #mixed building# is subject to tower regulations, the #residential# tower regulations of paragraphs (a) and (b) or the #commercial# tower regulations of paragraph (c) of this Section shall apply to the entire #building#.

(a) In C1 or C2 Districts mapped within R9 or R10 Districts, or in C1-8, C1-9, C2-7 or C2-8 Districts, a #mixed building# that meets the location and #floor area# criteria of paragraph (a) of ~~requirements of a tower-on-a-base set forth in~~ Section 23-65 (Tower Regulations) shall be governed by the provisions of Section ~~23-652~~ 23-651 (Tower-on-a-base), except that the building base regulations of paragraph (b) of Section ~~23-652~~ 23-651 ~~(Building base regulations)~~ shall be ~~amended~~ modified as follows:

(1) On a #wide street#, and on a #narrow street# within 30 feet of its intersection with a #wide street#, the entire ~~length~~ width of the #street wall# of a base shall be located on the #street line#.

However, to allow for articulation of corners at the intersection of two #street lines#, the #street wall# may be located anywhere within an area bounded by the two #street lines# and a line connecting such #street lines# at points 15 feet from their intersection. Recesses, not to exceed three feet in depth from the #street line#, shall be permitted on the ground floor where required to provide access to the #building#.

(2) On a #narrow street# beyond 30 feet of its intersection with a #wide street#, the #street wall# of a base shall be located within eight feet of a #street line#.

(3) On a #wide street#, recesses above the ground floor are permitted at any level in the #street wall# of a base for #outer courts# or balconies. The aggregate ~~length~~ width of such recesses shall not exceed 50 percent of the ~~length~~ width of the entire #street wall# at any level.

However, not more than 30 percent of the aggregate ~~length~~ width of such recesses shall exceed a depth of eight feet. Furthermore, no recesses shall be permitted below a height of 12 feet, within 20 feet of an adjacent #building#, or within 30 feet of the intersection of two #street lines#, except for corner articulation as provided for in paragraph (a)(1) of this Section.

(4) On a #narrow street#, recesses are permitted at any level in the #street wall# of a base for #outer courts# or balconies. The aggregate ~~length~~ width of such recesses shall not exceed 50 percent of the ~~length~~ width of the entire #street wall# at any level.

However, not more than 30 percent of the aggregate ~~length~~ width of such recesses shall exceed a depth of eight feet. Furthermore, no recesses shall be permitted below a height of 12 feet within 20 feet of an adjacent #building#, or within 30 feet of the intersection of two #street lines#, except for corner articulation as provided for in paragraph (a)(1) of this Section.

(b) In C4-6, C5-1 or C6-3 Districts, the #residential# portion of a #mixed building# that in the aggregate occupies not more than 40 percent of the #lot area# of a #zoning lot# or, for #zoning lots# of less than 20,000 square feet, the percent set forth in Section ~~23-651~~ 23-

65 ~~(Towers on small lots),~~ (Tower Regulations), may be constructed in conformance with the provisions of Section ~~23-65~~ 23-652 (Standard tower regulations), provided the following conditions are met:

(1) at least 65 percent of the total allowable #floor area# on a #zoning lot# under the applicable district regulations is occupied by #residential uses#;

(2) all ~~non-#residential~~ uses# within such #mixed building# comply with the provisions of Section 32-42 (Location within Buildings); and

(3) ~~no non-~~only the #residential# portion of ~~a~~ such #mixed building# penetrates the #sky exposure plane# as set forth in Sections 33-432 or 33-442 (In other Commercial Districts).

(c) In C4-7, C5-2, C5-3, C5-4, C5-5, C6-4, C6-5, C6-6, C6-7, C6-8 or C6-9 Districts, the tower regulations applicable to any #mixed building# shall be the regulations set forth in Section 33-45.

However, in C4-7, C5-2, C5-4, C6-4, C6-5 or C6-8 Districts, when no more than two #stories# of a #mixed building# are occupied by non-#residential uses#, the tower regulations applicable to the #residential# portion of such #mixed building# may be governed by Sections ~~23-65 or 23-651~~ 23-652 (Standard tower regulations) or, for towers on small lots, the percentages set forth in Section 23-65 (Tower Regulations).

All ~~non-#residential~~ uses# within such #mixed building# shall comply with the provisions of Section 32-42.

The tower regulations shall not apply in C1 or C2 Districts mapped within R9A, R9X, R10A or R10X Districts, or in C1-8A, C1-8X, C1-9A, C2-7A, C2-7X, C2-8A, C4-6A, C4-7A, C5-1A, C5-2A, C6-2A, C6-3A, C6-3X, C6-4A or C6-4X Districts.

Article III
Chapter 6
Accessory Off-Street Parking and Loading Regulations

36-00
GENERAL PURPOSES AND DEFINITIONS

Off-Street Parking Regulations

* * *

36-02
Applicability of District Regulations

* * *

36-023
Applicability of regulations in C4-1 Districts

In C4-1 Districts, for #zoning lots# having a #lot area# in excess of 4 acres, all #group parking facilities# that are #accessory# to ~~new~~ #commercial development # ~~#developments#~~ or #enlargements# shall be subject to authorization by the City Planning Commission to assure that the layout of such parking spaces is arranged and located in relation to the #use# or #uses# to which such spaces are #accessory#, so as to provide adequate ingress, egress and circulation with respect to abutting #streets# or #uses#.

For such #zoning lots#, ~~T~~the Commission may also authorize a reduction of the parking requirement of Section 36-21 (General Provisions) by an amount not to exceed 50 percent, provided that the Commission finds that the applicant has demonstrated that the proposed parking is sufficient for the #use# proposed.

Furthermore, notwithstanding the applicability requirements of Sections 36-58 (Parking Lot Maneuverability and Curb Cut Regulations), paragraph (a), and 37-91, the Commission shall find that ~~#developments# or #enlargements#~~such #group parking facilities# of any size comply with the maneuverability and landscaping provisions of Sections 36-58 and 37-90 (PARKING LOTS), inclusive. For #group parking facilities# #accessory# to #enlargements#, the Commission may authorize modifications or waivers of such provisions, provided the Commission finds that:

(a) maneuverability and curb cut regulations have been complied with to the maximum extent practicable;

(b) the amount of perimeter landscaped areas have been provided to the maximum extent practicable;

(c) the amount of interior planting islands and their distribution throughout the parking lot have been provided to the maximum extent practicable; and

(d) perimeter landscaped areas and interior planting islands have been engineered to absorb storm water runoff to the maximum extent practicable.

The Commission may request reports from licensed engineers and landscaped architects in considering such modifications.

* * *

36-20
REQUIRED ACCESSORY OFF-STREET PARKING SPACES FOR COMMERCIAL OR COMMUNITY FACILITY USES

36-21
General Provisions

C1 C2 C3 C4 C5 C6 C7 C8

In all districts, as indicated, #accessory# off-street parking spaces, open or enclosed, shall be provided in conformity with the requirements set forth in the table in this Section for all ~~new~~ #developments# after December 15, 1961, for the #commercial# or #community facility uses# listed in the table. If an #enlargement# results in a net increase in the #floor area# or other applicable unit of measurement specified in the table in this Section, the same requirements set forth in the table shall apply to such net increase in the #floor area# or other specified unit of measurement. In addition, all other applicable requirements of this Chapter shall apply as a condition precedent to the #use# of such #development# or #enlargement#.

A parking space is required for a portion of a unit of measurement one-half or more of the amount set forth in the table.

For the purposes of this Section, a tract of land on which a group of such #uses# is #developed#, under single ownership or control, shall be considered a single #zoning lot#.

For those #uses# for which rated capacity is specified as the unit of measurement, the Commissioner of Buildings shall determine the rated capacity as the number of persons that may be accommodated by such #uses#.

~~After December 15, 1961, if an #enlargement# results in a net increase in the #floor area# or other applicable unit of measurement specified in the table in this Section, the same requirements set forth in the table shall apply to such net increase in the #floor area# or other specified unit of measurement.~~

* * *

36-30
REQUIRED ACCESSORY OFF-STREET PARKING SPACES FOR RESIDENCES WHEN PERMITTED IN COMMERCIAL DISTRICTS

* * *

36-31
General Provisions

* * *

36-311
Application of requirements to conversions in C1 or C2 Districts

C1 C2

(a) In the districts indicated, where such districts are mapped within R1, R2, R3, R4, R5, R6, or R7 Districts, except R7-2 Districts, the requirements of Section 36-31 (General Provisions) shall not apply to the additional #dwelling units# or #rooming units# created by #conversions# ~~of any kind~~ on #zoning lots# with less than 5,000 square feet of #lot area#.

(b) In the districts indicated, where such districts are mapped within R7-2, R8, R9 or R10 Districts, the requirements of Section 36-31 (General Provisions) shall not apply to the additional #dwelling units# or #rooming units# created by #conversions# ~~of any kind~~ on #zoning lots# of any size.

36-312
Application of requirements to conversions in C3, ~~or~~ C4, C5 and C6 districts

C3 C4-1 C4-2 C4-3

(a) In the districts indicated, the requirements of Section 36-31 (General Provisions) shall not apply to the additional #dwelling units# or #rooming units# created by #conversions# ~~of any kind~~ on #zoning lots# with less than 5,000 square feet of #lot area#.

C4-4 C4-5 C4-6 C4-7 C5 C6

(b) In the districts indicated, no #accessory# off-street parking is required for additional #dwelling units# or #rooming units# created by #conversion# within #buildings# existing prior to December 15, 1961.

* * *

36-33
Requirements Where Group Parking Facilities Are Provided

C1 C2 C3 C4 C5 C6 C7 C8

In the districts indicated, for #residences developed# under single ownership or control where #group parking facilities# are provided, the number of required #accessory# off-street parking spaces is as set forth in ~~this Section.~~ Section 25-23 (Requirements Where Group Parking Facilities Are Provided), for the applicable #residence district#, as determined in accordance with Section 35-22 or 35-23.

~~**36-331**~~
~~**In C1 or C2 Districts governed by surrounding Residence District bulk regulations**~~

~~C1-1 C1-2 C1-3 C1-4 C1-5 C2-1 C2-2 C2-3 C2-4 C2-5~~

~~In the districts indicated, the number of required #accessory# off-street parking spaces is determined by the #Residence District# within which such #Commercial District# is mapped, in accordance with the following table:~~

~~REQUIRED PARKING SPACES AS A PERCENT OF TOTAL DWELLING UNITS~~

~~#Residence District# within which C1 or C2 District is Mapped~~	~~Percent~~
~~R1 R2 R3 R4~~	~~100~~
~~R5~~	~~85~~
~~R6~~	~~70~~
~~R5D~~	~~66~~
~~R7-1~~	~~60~~
~~R6A R6B R7-2 R7A R7B R7D R7X R8B*~~	~~50~~
~~R8 R9 R10~~	~~40~~

~~* In the Borough of Brooklyn, R8B Districts are subject to the parking requirements applicable in R8 Districts~~.

~~**36-332**~~
~~**In other C1 or C2 Districts, or in C3, C4, C5 or C6 Districts**~~

~~C1-6 C1-7 C1-8 C1-9 C2-6 C2-7 C2-8 C3 C4 C5 C6~~

~~In the districts indicated, the number of required #accessory# off-street parking spaces is as set forth in the following table:~~

~~REQUIRED PARKING SPACES AS A PERCENT OF TOTAL DWELLING UNITS~~

~~District~~	~~Percent~~
~~C3*~~	~~100~~
~~C4-1~~	~~85~~
~~C4-2 C4-3~~	~~70~~
~~C1-6 C2-6 C4-2A C4-3A C4-4 C4-5 C6-1~~	~~50~~
~~C1-7 C1-8 C1-9 C2-7 C2-8 C4-6 C4-7 C5 C6-2 C6-3 C6-4 C6-5 C6-6 C6-7 C6-8 C6-9~~	~~40~~

~~* In C3A Districts, the provisions applicable to R3 Districts in Sections 25-22 (Requirements Where Individual Parking Facilities Are Provided) and 25-60 (ADDITIONAL REGULATIONS FOR PERMITTED OR REQUIRED ACCESSORY OFF-STREET PARKING SPACES) shall apply.~~

* * *

36-35
Modification of Requirements for Public Housing or Non-profit Residences for the Elderly

C1 C2 C3 C4 C5 C6

In the districts indicated, the number of required #accessory# off-street parking spaces is as set forth in Section 25-25 (Modifications of Requirements for Public, Publicly-Assisted and Government Assisted Housing or for Non-profit Residences for the Elderly) for the applicable #residence district#, as determined in accordance with Section 35-22 or 35-23.

~~In all districts, as indicated, #accessory# off-street parking spaces shall be provided for at least that percentage of the total number of #dwelling units# in each category as set forth in the following table, for:~~

~~(a) all #dwelling units# in publicly-assisted housing #developments# approved by the City Planning Commission and the Board of Estimate which limit maximum tenant income and receive cash and/or interest subsidies under Federal mortgage programs;~~

~~(b) all #dwelling units# in low rent public housing #developments# owned by or constructed for the New York City Housing Authority or other public authority and receiving cash subsidies, or #dwelling units# in new housing #developments# approved by the City Planning Commission and the Board of Estimate that are reserved for low-income tenants for a period of not less than 40 years at rentals equivalent to rentals in low rent public housing #developments# receiving cash subsidies;~~

~~(c) #non-profit residences for the elderly# or #dwelling units# in publicly-assisted or public housing #developments# that are reserved for elderly tenants for a period of not less than 40 years and that comply with the appropriate space requirements for related #accessory# social and welfare facilities set forth in Section 12-10 (DEFINITIONS - Non-profit~~

~~residence for the elderly);~~

~~(d) all #dwelling units# in publicly-assisted housing #developments# approved by the City Planning Commission and the Board of Estimate which limit maximum tenant income and receive rent subsidy contracts under Federal rent subsidy programs, other than such ##developments# owned by or constructed for the New York City Housing Authority which have received "plan" and "project" approval prior to June 30, 1975; and #non-profit residences for the elderly# or #dwelling units# for the elderly;~~

~~(e) all government assisted #dwelling units# or #rooming units# in #developments# which receive New York City or New York State assistance to reduce total #development# cost by $10,000 or 10 percent, whichever is less, and limit maximum tenant income to the income limits established by the United States Department of Housing and Urban Development for New York City mortgagors assisted under Section 235 of the National Housing Act, as amended.~~

~~36-351~~
~~In C1 or C2 Districts governed by surrounding Residence District bulk regulations~~

~~C1-1 C1-2 C1-3 C1-4 C1-5 C2-1 C2-2 C2-3 C2-4 C2-5~~

~~In the districts indicated, the percentage of the total number of #dwelling units# in each category for which #accessory# off-street parking spaces shall be provided is determined by the #Residence District# within which such #Commercial District# is mapped, in accordance with the following table:~~

~~PARKING SPACES REQUIRED FOR PUBLIC,~~
~~PUBLICLY ASSISTED AND GOVERNMENT ASSISTED HOUSING DEVELOPMENTS~~
~~OR NON-PROFIT RESIDENCES FOR THE ELDERLY~~
~~(percent of total #dwelling units#)~~

~~Publicly Assisted Housing~~	~~Federal Rent Subsidy Programs~~	~~Public Housing #Developments# or #Dwelling Units# for Low Income Tenants~~	~~#Non-profit Residences for the Elderly# or #Dwelling Units# for the Elderly #~~	~~Gov't Assisted Housing~~	~~District~~
~~80~~	~~65~~	~~50.0~~	~~***~~	~~80~~	~~R1 R2~~
~~80~~	~~65~~	~~50.0~~	~~35.0~~	~~80~~	~~R3 R4~~
~~70~~	~~56~~	~~42.5~~	~~31.5~~	~~70~~	~~R5~~
~~55~~	~~45~~	~~35.0~~	~~22.5~~	~~55~~	~~R5D R6**~~
~~39~~	~~32~~	~~25.0~~	~~16.0~~	~~35~~	~~R6A R6B R7B~~
~~45~~	~~38~~	~~30.0~~	~~20.0~~	~~45~~	~~R7-1**~~
~~30~~	~~23~~	~~15.0~~	~~12.5~~	~~25~~	~~R7-2 R7A R7D R7X R8B*~~
~~30~~	~~21~~	~~12.0~~	~~10.0~~	~~25~~	~~R8 R8A R8X R9 R10~~

~~* In the Borough of Brooklyn, R8B Districts are subject to the parking requirements applicable in R8 Districts~~

~~** For assisted housing projects #developed#, or #enlarged# where permitted, pursuant to~~

~~the in #Quality Housing Program in C1 and C2 Districts mapped within R6 or R7-1 Districts, the applicable district parking requirements shall be as follows:~~

~~District~~	~~Applicable District Parking Requirement~~
~~R6~~	~~R6A~~
~~R7-1~~	~~R7A~~

~~*** #Non-profit residence for the elderly# is not a permitted #use# in R1 or R2 Districts. See Section 22-12 (Use Group 2).~~

~~36-352~~
~~In other C1 or C2 Districts or in C3, C4, C5, or C6 Districts~~

~~C1-6 C1-7 C1-8 C1-9 C2-6 C2-7 C2-8 C3 C4 C5 C6~~

~~In the districts indicated, the percentage of the total number of #dwelling units# in each category for which #accessory# off-street parking spaces shall be provided is as set forth in the following table:~~

~~PARKING SPACES REQUIRED FOR~~
~~PUBLIC, PUBLICLY ASSISTED AND GOVERNMENT ASSISTED HOUSING~~
~~DEVELOPMENTS OR NON-PROFIT RESIDENCES FOR THE ELDERLY~~
~~(percent of total #dwelling units#)~~

~~Publicly Assisted Housing~~	~~Federal Rent Subsidy Programs~~	~~Public Housing #Developments# or #Dwelling Units# for Low Income Tenants~~	~~#Non-profit Residences for the Elderly# or #Dwelling Units# for the Elderly #~~	~~Gov't Assisted Housing~~	~~District~~
~~80~~	~~65~~	~~50.0~~	~~35.0~~	~~80~~	~~C3~~
~~70~~	~~56~~	~~42.5~~	~~31.5~~	~~70~~	~~C4-1~~
~~55~~	~~45~~	~~35.0~~	~~22.5~~	~~55~~	~~C4-2* C4-3*~~
~~39~~	~~32~~	~~25.0~~	~~16.0~~	~~35~~	~~C4-2A C4-3A C4-4 C4-5* C6-1*~~
~~30~~	~~23~~	~~15.0~~	~~12.5~~	~~25~~	~~C1-6 C2-6 C4-4A C4-5A C4-5D C4-5X~~
~~30~~	~~21~~	~~12.0~~	~~10.0~~	~~25~~	~~C1-7 C1-8 C1-9 C2-7 C2-8 C4-6 C4-7 C5 C6-2 C6-3 C6-4 C6-5 C6-6 C6-7 C6-8 C6-9~~

---

* ~~For assisted housing projects #developed#, or #enlarged# where permitted, pursuant to thein #Quality Housing buildings# Program in C4-2, C4-3, C4-4, C4-5 or C6-1 Districts the applicable district parking requirements shall be as follows:~~

~~District~~	~~Applicable District Parking Requirement~~
~~C4-2 C4-3~~	~~C4-2A~~
~~C4-4 C4-5 C6-1~~	~~C4-4A~~

* * *

36-361
~~For new development or enlargements i~~In C1 or C2 Districts governed by surrounding Residence District bulk regulations

C1-1 C1-2 C1-3 C1-4 C1-5 C2-1 C2-2 C2-3 C2-4 C2-5

In the districts indicated, where such districts are mapped within R6, R7, R8, R9, or R10 Districts, the requirements set forth in Section 36-31 (General Provisions) ~~for new #development# or #enlargements#~~ shall be waived if the required number of #accessory# off-street parking spaces resulting from the application of such requirements is no greater than the maximum number as set forth in the following table. The maximum number is determined by the #Residence District# within which the #Commercial District# is mapped.

NUMBER OF SPACES FOR WHICH
REQUIREMENTS ARE WAIVED

#Residence District# within which C1 or C2 District is Mapped	Maximum Number of Spaces Waived
R5D	1
R6 R7-1 R7B	5
R7-2 R7A R7D R7X R8 R9 R10	15

However, the following provisions shall apply:

(a) in C1 or C2 Districts mapped within R5D Districts, the provisions of this Section shall apply only to #zoning lots# existing both on June 29, 2006, and on the date of application for a building permit; and

(b) in C1 or C2 Districts mapped within R6 and R7 Districts in #lower density growth management areas# in Community District 10 in the Borough of the Bronx, the provisions of this Section, inclusive, shall only apply to #zoning lots# existing both on March 25, 2010, and on the date of application for a building permit.

36-362
~~For new development or enlargements i~~In other C1 or C2 Districts or in C4, C5 or C6 Districts

C1-6 C1-7 C1-8 C1-9 C2-6 C2-7 C2-8 C4-2 C4-3 C4-4 C4-5 C4-6 C4-7 C5 C6

In the districts indicated, ~~for all new #development# or #enlargements#,~~ the requirements set forth in Section 36-31 (General Provisions) shall be waived if the required number of #accessory# off-street parking spaces resulting from the application of such requirements is no greater than the maximum number as set forth in the following table:

Maximum Number of Spaces

Waived	Districts
5	C4-2 C4-3
15	C1-6 C1-7 C1-8 C1-9 C2-6 C2-7 C2-8 C4-4 C4-5 C4-6 C4-7 C5 C6

36-363
For conversions in C1 or C2 Districts governed by surrounding Residence District bulk regulations

C1-1 C1-2 C1-3 C1-4 C1-5 C2-1 C2-2 C2-3 C2-4 C2-5

In the districts indicated*, where such districts are mapped within R6, R7A, R7B, R7D, R7X or R7-1 Districts, the requirements set forth in Section 36-311 (Application of requirements to conversions in C1 or C2 Districts) shall be waived if the required number of #accessory# off-street parking spaces resulting from the application of such requirements is 20 spaces or less, provided that the Board of Standards and Appeals may waive requirements for a greater number of spaces in accordance with the provisions of Section 78-46 (Waiver of Requirements for Conversions).

* No #accessory# off-street parking is required for additional #dwelling units# created by #conversions# in C1 or C2 Districts mapped within R7-2, R8, R9, or R10 Districts. See Section 36-311 (Application of requirements to conversions in C1 or C2 Districts).

36-364
For conversions in C4 Districts

C4-2 C4-3

In the districts indicated*, the requirements set forth in Section 36-312 (Application of requirements to conversions in C3, C4 or C7 Districts) shall be waived, if the required number of #accessory# off-street parking spaces resulting from the application of such requirements is 20 spaces or less, provided that the Board of Standards and Appeals may waive requirements for a greater number of spaces in accordance with the provisions of Section 73-46 (Waiver of Requirements for Conversions).

* No #accessory# off-street parking is required for additional #dwelling units# created by #conversions# in the districts not indicated in Section 36-312 (Application of requirements to conversions in C3, C4 or C7 Districts).

* * *

36-40
RESTRICTIONS ON LOCATION AND USE OF ACCESSORY OFF-STREET PARKING SPACES

* * *

36-47
Restrictions on Automotive Repairs and Sale of Motor Fuel

C1 C2 C3 C4 C5 C6 C7 C8

In all districts, as indicated, automotive repairs or the sale of motor fuel, motor oil, or automotive accessories are not permitted in connection with the operation of #accessory# off-street parking spaces. However, where such parking spaces are provided in a #building or other structure#, ~~#detached# from a #residential~~ unattached to the #building# containing #residences#, minor automotive repairs (not including body work) are permitted, and not more than three motor fuel

pumps may be provided. However, no motor fuel shall be sold to persons who are not using the parking spaces. The provisions of this Section are not applicable to #accessory# off-street parking spaces provided in #public parking garages#.

36-50
ADDITIONAL REGULATIONS FOR PERMITTED OR REQUIRED ACCESSORY OFF-STREET PARKING SPACES

* * *

36-532
Location and width of curb cuts accessing residential parking spaces in certain districts

The provisions of this Section 36-532 shall apply to all curb cuts accessing off-street parking spaces #accessory# to #residences# in C1 and C2 Districts mapped within R1 through R8 Districts, and in all other #commercial districts# where, as set forth in the Tables in Section 34-112 or 35-23, as applicable, the applicable #Residential District# is R3, R4, R5, R6, R7 or R8.

* * *

(c) Where a #commercial district# with only #narrow street# frontage is mapped along the short end of a #block#, and a #zoning lot# existing on April 14, 2010, has access to both the short and long ends of such #block#, all such curb cuts shall be prohibited along the #street line# of the short end of such #block#.

* * *

36-54
Restrictions on Use of Required Residential Open Space for Parking

C1-1 C1-2 C1-3 C1-4 C1-5 C1-6 C1-7 C1-8 C2-1 C2-2 C2-3 C2-4 C2-5 C2-6 C2-7 C3 C4-1 C4-2 C4-3 C4-4 C4-5 C6-1 C6-2 C6-3

In the districts indicated, except for C1 or C2 Districts when mapped within an R10 District, in accordance with the provisions of Sections 34-11 or 35-21 (General Provisions), not more than 50 percent of the required #open space# on any #zoning lot~~ developed~~# with a #building# containing #residences# may be used for driveways, private streets, open #accessory# off-street parking spaces or open #accessory# off-street loading berths.

* * *

36-58
Parking Lot Maneuverability and Curb Cut Regulations

C1 C2 C3 C4 C5 C6 C7 C8

(a) Applicability

In all districts, as indicated, the provisions of this Section shall apply to: ~~all #developments# and #enlargements#, as defined in this Section, that provide an open parking area #accessory# to #commercial# or #community facility uses#. All such #developments# and #enlargements# shall submit a site plan to the Department of Buildings showing the location of all parking spaces, curb cuts, and compliance with the maneuverability standards set forth in this Section.~~

~~For the purposes of this Section, #developments# and #enlargements# shall include only the following: be defined as follows:~~

(1) #developments# with #accessory# open parking areas ~~shall include only those~~ in which 70 percent or more of the #floor area# on the #zoning lot# is occupied by a

#commercial# or #community facility use#; ~~and~~

(2) #enlargements# of a #building# with #accessory# open parking areas ~~shall include only those~~ or the #enlargement# of an open parking area that result in:

(i) an increase in the ~~a~~ total number of parking spaces #accessory# to #commercial# or #community facility uses# on the #zoning lot# that is at least 20 percent greater than the number of such spaces existing on November 28, 2007; or

(ii) an increase in the ~~a~~ total amount of #floor area# on the #zoning lot# that is at least 20 percent greater than the amount of #floor area# existing on November 28, 2007, and where at least 70 percent of the #floor area# on the #zoning lot# is occupied by #commercial# or #community facility uses#~~.~~; and

(3) existing #buildings# with new #accessory# open parking areas in which 70 percent or more of the #floor area# on the #zoning lot# is occupied by a #commercial# or #community facility use#.

The provisions of this Section shall not apply to surface parking located on the roof of a #building#, indoor parking garages, #public parking garages#, structured parking facilities, or #developments# or #enlargements# in which at least 70 percent of the #floor area# or #lot area# on a #zoning lot# is used for automotive #uses# listed in Use Groups 9 or 16.

In addition, all #public parking lots# shall comply with the curb cut requirements of paragraph (c) of this Section.

For the purposes of this Section, an "open parking area" shall mean that portion of a #zoning lot# used for the parking or maneuvering of vehicles, including service vehicles, which is not covered by a #building#. Open parking areas shall also include all required landscaped areas within and adjacent to the open parking area.

For all such new or #enlarged# open parking areas, a site plan shall be submitted to the Department of Buildings showing the location of all parking spaces, curb cuts and compliance with the maneuverability standards set forth in this Section.

(b) Parking Lot Maneuverability

* * *

OFF-STREET LOADING REGULATIONS

36-60
GENERAL PURPOSES

* * *

36-62
Required Accessory Off-Street Loading Berths

C1 C2 C3 C4 C5 C6 C7 C8

In all districts, as indicated, #accessory# off-street loading berths, open or enclosed, shall be provided in conformity with the requirements set forth in the table in this Section and under rules and regulations promulgated by the Commissioner of Buildings, for all ~~new~~ #developments# and #enlargements# after December 15, 1961, for the #uses# listed in the table, except as otherwise provided in Sections 36-63 (Special Provisions for a Single Zoning Lot with Uses Subject to Different Loading Requirements) or 36-64 (Wholesale, Manufacturing or Storage Uses

Combined with Other Uses), as a condition precedent to the #use# of such #development# or #enlargement#.

After December 15, 1961, if the #use# of any #building or other structure# or #zoning lot# is changed or #enlarged#, the requirements set forth in the table shall apply to the #floor area# of the changed or #enlarged# portion of such #building# or of the #lot area# used for such #use#.

For the purposes of this Section, a tract of land on which a group of such #uses# is #developed# under single ownership or control shall be considered a single #zoning lot#.

Whenever any #use# specified in the table is located on an open lot, the requirements set forth in the table for #floor area# shall apply to the #lot area# used for such #use#.

~~After December 15, 1961, if the #use# of any #building or other structure# or #zoning lot# is changed or #enlarged#, the requirements set forth in the table shall apply to the #floor area# of the changed or #enlarged# portion of such #building# or of the #lot area# used for such #use#.~~

REQUIRED OFF-STREET LOADING BERTHS FOR
~~NEW CONSTRUCTION~~DEVELOPMENTS, ENLARGEMENTS OR CHANGES OF USE

District
Type of #Use#

#Floor Area# - Required Berths

---

* * *

36-64
Wholesale, Manufacturing, or Storage Uses Combined with Other Uses

C1 C2 C3 C4 C5 C6 C7 C8

In all districts, as indicated, except as provided in Section 36-63 (Special Provisions for a Single Zoning Lot with Uses Subject to Different Loading Requirements), if any #building# or #zoning lot# is used partly for wholesale, #manufacturing#, or storage #uses# or any combination of such #uses#, and partly for any other #uses# set forth in the table of Section 36-62 (Required Accessory Off-Street Loading Berths) at least 50 percent of the #floor area# in the #building# shall be subject to the requirements set forth for wholesale, #manufacturing#, or storage #uses#, and the remainder shall be subject to the other applicable requirements.

* * *

36-70
BICYCLE PARKING

C1 C2 C3 C4 C5 C6 C7 C8

~~In all districts, as indicated, bicycle parking spaces shall be provided in accordance with the requirements set forth in this Section, inclusive, as a condition precedent to the #use# of such #development#, #enlargement#, #dwelling unit#, conversion, #group parking facility# or open parking area.~~

In all districts, as indicated, the provisions of this Section, inclusive, relating to bicycle parking spaces shall apply to:

(a) #developments#;

(b) #enlargements# that increase the #floor area# within a #building# by 50 percent or more;

(c) #dwelling units# created by #conversions# of non-#residential floor area#;

(d) new #dwelling units# in ~~#residential~~ buildings# or #building segments# constructed after April 22, 2009;

(e) new enclosed #accessory group parking facilities# with 35 or more automobile parking spaces; and

(f) open parking areas #accessory# to #commercial# or #community facility uses# that contain 18 or more automobile parking spaces or are greater than 6,000 square feet in area.

In addition, the provisions of Section 36-75 (Floor Area Exemption) shall apply to all #buildings# as set forth therein.

Bicycle parking spaces shall be provided in accordance with the requirements set forth in this Section, inclusive, as a condition precedent to the #use# of such #development#, #enlargement#, #conversion#, #group parking facility# or open parking area.

The number of #accessory# bicycle parking spaces provided pursuant to this Section, the total area, in square feet, of bicycle parking spaces and the total area, in square feet, excluded from the calculation of #floor area# for such spaces shall be noted on the certificate of occupancy.

36-71
Required Bicycle Parking Spaces

36-711
Enclosed bicycle parking spaces

C1 C2 C3 C4 C5 C6 C7 C8

* * *

However, the bicycle parking requirements set forth in the table shall be waived for bicycle parking spaces that are accessory to:

(a) ~~#residential~~ buildings# containing 10 #dwelling units# or less;

(b) colleges, universities or seminaries where the number of required enclosed bicycle parking spaces is six or less;

(c) college or #school# student dormitories or fraternity and sorority student houses where the number of required bicycle parking spaces is five or less; or

(d) all other #community facility# or #commercial uses# not otherwise listed in the table where the number of required bicycle parking spaces is three or less.

* * *

36-75
Floor Area Exemption

C1 C2 C3 C4 C5 C6 C7 C8

In all districts, as indicated, space provided for enclosed #accessory# bicycle parking spaces pursuant to the standards of this Section shall be excluded from the calculation of #floor area#, provided that:

(a) the space excluded from #floor area# does not exceed an amount equal to 15 square feet multiplied by the number of required spaces or, if spaces are waived pursuant to

paragraphs (a), (b), (c) or (d) of Section 36-711 (Enclosed bicycle parking spaces), the number that would have been required but for the waiver, or, if spaces are not required because the #building# was constructed prior to April 22, 2009, the number that would be required if such #building# were newly constructed; and

(b) the #accessory# bicycle parking spaces provided meet the standards for required bicycle parking of Section 36-73 (Restrictions on Operation, Size and Location of Bicycle Parking Spaces).

* * *

Article III
Chapter 7
Special Urban Design Regulations

37-10
APPLICABILITY OF ARTICLE II, CHAPTER 6, TO DEVELOPMENTS WITH PRIVATE ROADS

In C1 or C2 Districts mapped within R3, R4 or R5 Districts, and in C3 Districts, the provisions of Section 26-20 (SPECIAL REQUIREMENTS FOR DEVELOPMENTS WITH PRIVATE ROADS) shall apply to any #~~development~~ zoning lot# ~~containing~~ with #buildings# accessed by #private roads#, except where such #~~developments~~ zoning lot# contains #private roads# constructed prior to February 6, 2002. In addition, the open area between buildings and sidewalks required pursuant to Section 26-25 need not be planted where such open areas front upon #commercial uses#.

However, in C3A Districts located within #lower density growth management areas#, the provisions of 26-30 (SPECIAL REQUIREMENTS FOR DEVELOPMENTS WITH PRIVATE ROADS IN LOWER DENSITY GROWTH MANAGEMENT AREAS) shall apply.

* * *

37-30
STREETSCAPE

37-31
Applicability

The regulations of Sections 37-30 through 37-37, inclusive, shall apply to any ~~#residential development# or any~~ #development# occupied by #predominantly residential use#, constructed after April 21, 1977, located on any #zoning lot# within C1-8, C1-9, C2-7 C2-8, C4-6, C4-7, C5-1, C5-2, C5-4, C6-3, C6-4, C6-5 or C6-8 Districts, or C1 and C2 Districts mapped within R9 or R10 Districts. However, Sections 37-30 through 37-37, inclusive, shall not apply within any Special Purpose District nor shall it apply to any ~~#development# pursuant to the~~ Quality Housing building# ~~Program~~, except as otherwise set forth therein.

An application to the Department of Buildings for a permit respecting any ~~new~~ #development# shall include a plan and an elevation drawn to a scale of at least one sixteenth inch to a foot of the new #building# and #buildings# on #contiguous lots# or #contiguous blocks# showing #signs#, other than #advertising signs#, #arcades#, #street wall# articulation, curb cuts, #street# trees, sidewalk paving, central refuse storage area and such other necessary information as may be required by the Commissioner of Buildings.

37-32
Definitions

Contiguous block

For the purposes of Sections 37-30 through 37-37, inclusive, a "contiguous block" is a #block# containing one or more #zoning lots# separated by a #narrow street# from the #block# containing the ~~new~~ #development#.

Contiguous lot

For the purposes of Sections 37-30 through 37-37, inclusive, a "contiguous lot" is a #zoning lot# which shares a common #side lot line# with the #zoning lot# of the #development#.

Development

For the purposes of Sections 37-30 through 37-37, inclusive, in addition to the definition of #development# pursuant to Section 12-10 (Definitions), "development" shall also include~~s~~ ~~construction of a new #building or other structure# on a #zoning lot#, the relocation of an existing #building# on another #zoning lot# and~~ an #enlargement# involving an increase in #lot coverage#.

Predominantly residential use

For the purposes of Sections 37-30 through 37-37, inclusive, a "predominantly residential use" means a #building# having a #residential floor area# in excess of 50 percent of the total #building floor area#.

37-33
Applicability of Article II

In C1-8, C1-9, C2-7, C2-8, C4-6, C4-7, C5-1, C5-2, C5-4, C6-3, C6-4, C6-5 and C6-8 Districts, or C1 or C2 Districts mapped within R9 or R10 Districts, the regulations of Article II, Chapter 6 (Special Urban Design Guidelines - Streetscape), shall apply to ~~any #residential development# or~~ any #development# occupied by #predominantly residential use#, except as modified by the provisions of Sections 37-34 to 37-37, inclusive, relating to Modifications to the Applicability of Article II, Chapter 6. The purpose of these modifications is to make the regulations of Article II, Chapter 6, applicable to #Commercial Districts#.

37-34
Modifications to Applicability of Article II, Chapter 6

In C1-8, C1-9, C2-7, C2-8, C4-6, C5-1, C5-2, C5-4, C6-3, C6-4, C6-5 and C6-8 Districts, or C1 or C2 Districts mapped within R9 or R10 Districts, the regulations of Article II, Chapter 6, applicable to ~~#residential developments# or~~ #developments# occupied by a #predominantly residential use# are modified by the provisions of Sections 37-35 (Retail Continuity), 37-36 (Sign Regulations) and 37-37 (Street Wall Articulation).

37-35
Retail Continuity

For #buildings# with ~~When the~~ front building walls ~~of a #development # is~~ that are at least 50 feet in ~~length~~ width and front~~s~~ upon a #wide street#, a minimum of 50 percent of the width of such front building wall shall be occupied at the ground floor level by #commercial uses#, as permitted by district regulations.

In C1-8, C1-9, C2-7, C2-8, C4-6 Districts and C1 or C2 Districts mapped within R9 or R10 Districts, #uses# which occupy such 50 percent of the front building wall shall be limited to those listed in Use Groups 6A, 6C and 6F, excluding banks and loan offices, except that in C4-6 Districts only, such #uses# may additionally include those listed in Use Groups 8A, 8B and 10A. All #uses# permitted by the underlying district regulations are permitted in the remaining 50 percent of the front building wall.

Such requirement of #commercial uses# for a minimum of 50 percent of the front building wall ~~of a #development#~~ may be waived, or additional #uses# permitted, upon certification by the City Planning Commission to the Commissioner of Buildings that ~~either~~ an adequate supply of such #uses# already exists at the ground floor level in the surrounding area. The Commission may require that an application for such certification of additional #uses# for a completed #building#, where #floor area# has been designated for occupancy for such #commercial uses#, establish that a good faith effort has been made to secure tenancy by such #uses#.

37-36

Sign Regulations

In addition to the applicable district regulations in C1-8, C1-9, C2-7, C2-8 and C4-6 Districts and C1 or C2 Districts mapped within R9 or R10 Districts, all #signs#, other than #advertising signs# and window #signs#, shall be located in a horizontal band not higher than three feet, the base of which is located not higher than 17 feet above #curb level#. Where there is a grade change of at least 1.5 feet in 100 along the portion of the #street# upon which the #development# fronts, such signage band may be staggered along such #street#.

When ~~an existing~~ ~~#development~~ a #building# on a #contiguous lot# or #contiguous block# contains #accessory business signs# within a coordinated horizontal band along its #street# frontage, the signage strip along the ~~new~~ #development# shall be located at the same elevation as the adjacent band, but in no event higher than 17 feet above #curb level#. Where coordinated horizontal bands exist on two #contiguous lots# or #contiguous blocks# on both sides of the #development#, the signage strip shall be located at the same elevation as one adjacent band, or between the elevations of the two. For the purpose of this Section, the elevation is measured from the #curb level# to the base of the signage strip.

The City Planning Commission may, by certification to the Commissioner of Buildings, allow modifications of the requirements of this Section. Such modifications will be permitted when the Commission finds that such modifications will enhance the design quality of the #street wall#.

37-37
Street Wall Articulation

When any building wall ~~of a #development#~~ which is five feet or more in height adjoins a sidewalk, a #public plaza# or an #arcade#, at least 50 percent of the total surface area of such wall between #curb level# and 12 feet above #curb level# or to the ceiling of the ground floor, whichever is higher, or to the full height of the wall if such wall is less than 12 feet in height, shall be transparent. The lowest point at any point of any transparency that is provided to satisfy the requirements of this Section shall not be higher than four feet above the #curb level#.

Door or window openings within such walls shall be considered as transparent. Such openings shall have a minimum width of two feet.

In addition, any portion of such building wall, 50 feet or more in ~~length~~ width, which contains no transparent element between #curb level# and 12 feet above #curb level# or the ceiling of the ground floor, whichever is higher, or to its full height if such wall is less than 12 feet in height, shall be covered with ivy or similar planting or contain artwork or be treated so as to provide visual relief. Plants shall be planted in soil having a depth of not less than 2 feet, 6 inches, and a minimum width of 24 inches. If artwork is being used, approval by the New York City ~~Art~~ Design Commission shall be obtained prior to the certificate of occupancy being issued for the #development#.

* * *

37-40
OFF-STREET RELOCATION OR RENOVATION OF A SUBWAY STAIR

Where a #development# or an #enlargement# is constructed on a #zoning lot# of 5,000 square feet or more of #lot area# that fronts on a portion of a sidewalk containing a stairway entrance or entrances into a subway station located within the #Special Midtown District# as listed in Section 81-46, the #Special Lower Manhattan District# as listed in Section 91-43, the #Special Downtown Brooklyn District# as listed in Section 101-43, the #Special Long Island City Mixed Use District# as described in Section 117-44, the #Special Union Square District# as listed in Section 118-60 and those stations listed in the following table, the existing entrance or entrances shall be relocated from the #street# onto the #zoning lot#. The new entrance or entrances* shall be provided in accordance with the provisions of this Section.

A relocated subway stair or a subway stair that has been renovated in accordance with the

provisions of Section 37-50 (REQUIREMENTS FOR PEDESTRIAN CIRCULATION SPACE) may be counted as pedestrian circulation space pursuant to Section 37-50.

Station	Line
The Bronx	
161st Street**	~~IND 6th Ave.~~ Grand Concourse
Manhattan	
8th Street	~~BMT~~ Broadway – 60th Street
23rd Street	~~BMT~~ Broadway – 60th Street
23rd Street	~~IRT~~ Lexington ~~Ave.~~ Avenue
28th Street	~~IRT~~ Lexington ~~Ave.~~ Avenue
33rd Street	~~IRT~~ Lexington ~~Ave.~~ Avenue
34th Street – Penn Station	~~IND~~ 8th ~~Ave.~~ Avenue
59th Street/Lexington Avenue-60th St.	~~IRT~~ Lexington ~~Ave.~~ Avenue and ~~BMT~~ Broadway – 60th Street

* Provision of a new subway entrance or entrances pursuant to the requirements of this Section may also require satisfaction of additional obligations under the Americans for Disabilities Act of 1990 (ADA), including the ADA Accessibility Guidelines. The New York City Transit Authority should be consulted with regard to any such obligations.

** Access stairways to elevated portions of station complex are exempt from this requirement.

* * *

37-42
Administrative Procedure for a Subway Stair Relocation or Renovation

For any #development# or #enlargement# that is subject to the requirements for the relocation of a subway stair entrance or counts a renovated subway stair as pedestrian circulation space in accordance with the provisions of Section 37-50 (REQUIREMENTS FOR PEDESTRIAN CIRCULATION SPACE), inclusive, no plan shall be approved by the Department of Buildings and no excavation permit or building permit shall be issued, unless the following criteria are met:

(a) for a relocated entrance, such plan includes a stair relocation plan and related documents that ~~bind the developer to~~ require:

(1) construction of the new stair entrance in accordance with such plan;

(2) demoli~~sh~~tion of above-ground elements of the existing entrance;

(3) sealing of the existing entrance at the sidewalk level; and

(4) ~~maintain~~ maintenance of the work performed on the relocated or renovated entrance; or

(b) for a renovated entrance, such plan includes a renovation plan and related documents that ~~bind the developer to~~ require:

(1) renovat~~e~~ion of the entrance in accordance with such plan; and

(2) ~~maintain~~ maintenance of the work performed on the renovated entrance; and

(c) such plan and related documents bear New York City Transit's approval; and

(d) such plan is accompanied by a certified copy of an agreement, as recorded between New York City Transit and the owner for an easement on the #zoning lot# for subway-related use of the new stair entrance and for public access via such entrance to the subway station, which agreement has been recorded against the #zoning lot# in the Office of the Register of the City of New York and is accompanied by the Register's receipt of recordation; and

(e) no permanent certificate of occupancy shall be issued for ~~any #development# or #enlargement#~~ the #building# either altered or #developed#, as set forth in Section 37-40 or #enlarged# that is subject to the subway stair relocation requirement or is counting a renovated subway stair as pedestrian circulation space in accordance with the provisions of Section 37-50, inclusive, unless and until all of the work required under paragraphs (a) or (b) of this Section has been completed and New York City Transit has so certified in writing to the Department of Buildings.

* * *

37-50
REQUIREMENTS FOR PEDESTRIAN CIRCULATION SPACE

37-51
Amount of Pedestrian Circulation Space

The minimum amount of pedestrian circulation space to be provided for #developments# or #enlargements# shall be determined by the following table:

MINIMUM
PEDESTRIAN CIRCULATION SPACE
REQUIREMENTS

Size of #zoning lot#	Required ~~#floor area#~~ area of Pedestrian Circulation Space
5,000 to 20,000 sq. ft.	1 sq. ft. per 350 sq. ft. of new #floor area#
Above 20,000 sq. ft.	1 sq. ft. per 300 sq. ft. of new #floor area#

* * *

37-53
Design Standards for Pedestrian Circulation Spaces

(a) Arcade

Arcades shall not be subject to the provisions of Sections 12-10 (DEFINITIONS) and 37-80 (ARCADES). In lieu thereof, the provisions of this Section shall apply.

An arcade is a continuous covered space that adjoins and extends along a #front lot line#, is at the same elevation as the adjoining sidewalk, is open for its entire length to the sidewalk except for columns and is accessible to the public at all times. An arcade shall be provided on the #wide street# frontage of a #zoning lot# of a ~~new~~ #development# or #enlargement# where the #zoning lot# lies directly adjacent to an existing arcade on a #wide street#, except where an existing #building# without an arcade extends along a portion of the #wide street front lot line# of the #zoning lot# containing the ~~new~~ #development# or #enlargement#. Where an arcade abuts another arcade, there shall be a clear, unobstructed passage between both arcades.

An arcade shall meet the following requirements:

(1) Dimensions

An arcade with columns shall have a minimum clear width of 10 feet, exclusive of all columns, and a maximum width of 15 feet, inclusive of columns. No column width shall be greater than five feet. Columns shall be spaced along the #street# with a minimum clear width between columns of 15 feet. An arcade shall have a clear height of not less than 12 feet and not more than 30 feet.

(i) On an #interior lot# or a #through lot# fronting on a #narrow street#, an arcade without columns is permitted only if:

(a) it has a continuous, unobstructed minimum length of 100 feet or, with the exception of the width of driveways for the required loading berths located at the #side lot line# of the #zoning lot#, is unobstructed for the full length of the ~~new #building#~~ frontage <u>of the #development#</u>, whichever is greater; and

(b) the entire #front lot line# shall be unobstructed for the same depth of the arcade, except for that portion of the #front lot line# occupied by an existing #building#.

(ii) On an #interior lot# or a #through lot# fronting on a #narrow street#, an arcade with columns is permitted only if it connects directly to an existing arcade on an adjacent #zoning lot#, matching it in width and alignment, and has a continuous, unobstructed minimum length beyond the existing adjacent arcade of at least 100 feet or, with the exception of the width of driveways for the required loading berths located at the #side lot line# of the #zoning lot#, is unobstructed for the full length of the ~~new #building#~~ frontage <u>of the #development#</u>, whichever is greater.

* * *

(iv) On a #wide street#, an arcade shall be permitted, provided that:

(a) the arcade extends along the full length of the #street line# between intersecting #streets#; or

(b) in the case of ~~a #building#~~ <u>an arcade</u> that occupies less than the entire #street# frontage between intersecting #streets#, on a full #block# front #zoning lot#, unobstructed pedestrian flow along the entire frontage is provided on the #zoning lot# by the arcade in combination with one or more of the following #open spaces# with which the arcade connects at one or both ends: a corner circulation space, a #publicly accessible open area# or an intersecting sidewalk widening; or

(c) in the case of ~~a #building#~~ <u>an arcade</u> whose #zoning lot# occupies less than the entire #street# frontage between intersecting #streets#, the arcade connects with an existing arcade of matching width and alignment, a #publicly accessible open area# on an adjacent #zoning lot#, so that unobstructed pedestrian flow along the entire #block# front is provided by the arcade in combination with such existing spaces.

* * *

(d) Corner circulation space

A corner circulation space is a small #open space# on ~~the~~ a #zoning lot# ~~of a #development# or #enlargement#~~, adjoining the intersection of two #streets#, at the same elevation as the adjoining sidewalk or sidewalk widening and directly accessible to the public at all times.

A corner circulation space shall meet the following requirements:

* * *

(f) Sidewalk widening

A sidewalk widening is a continuous, paved, open area along the #front lot line# of a #zoning lot# at the same elevation as the adjoining sidewalk and directly accessible to the public at all times. A sidewalk widening shall be provided on the #wide street# frontage of a #zoning lot# of a ~~new~~ #development# or #enlargement# where all existing #buildings# on the same #block# frontage, whether on the same or another #zoning lot#, provide sidewalk widenings.

A sidewalk widening shall meet the following requirements:

(1) Dimensions

A sidewalk widening shall have a width of no less than five feet nor more than 10 feet measured perpendicular to the #street line#, and shall be contiguous along its entire length to a sidewalk.

A sidewalk widening shall extend along the full length of the #front lot line# except for the portion of the #front lot line# interrupted by an existing #building# which is located at a #side lot line# or, in the case of a full #block# frontage, located at the intersection of two #streets#.

A required sidewalk widening on a #wide street# shall connect directly to any existing adjoining sidewalk widening and shall extend the entire length of the ~~new~~ #front lot line#.

* * *

(h) Through #block# connection

A through #block# connection is a paved, open or enclosed space providing unobstructed access to the building's main lobby and connecting, in a straight, continuous, unobstructed path, two parallel or nearly parallel #streets#.

Up to a maximum of 3,000 square feet of a through #block# connection may count toward the minimum pedestrian circulation space requirement.

A through #block# connection shall meet the following requirements:

(1) Location

* * *

(2) Design standards for a through #block# connection

* * *

(vii) A through #block# connection shall at a minimum be accessible to the public from 8:00 a.m. to 7:00 p.m. on the days the #building# ~~or #development#~~ is open for business and shall have posted, in prominent, visible locations at its entrances, signs meeting the standards set forth in paragraph (h)(2)(viii) of this Section.

* * *

37-70
PUBLIC PLAZAS

* * *

37-72
Access and Circulation

* * *

37-726
Permitted obstructions

* * *

(c) Canopies, awnings and marquees

Entrances to #buildings# located within a #public plaza# may have a maximum of one canopy, awning or marquee, provided that such canopy, awning or marquee:

(1) has a maximum area of 250 square feet;

(2) does not project into the #public plaza# more than 15 feet when measured perpendicular to the building façade;

(3) is located a minimum of 15 feet above the level of the #public plaza# adjacent to the building entrance; and

(4) does not contain vertical supports.

Such canopies, awnings, and marquees shall be designed to provide maximum visibility into the #public plaza# from adjoining #streets# and the adjacent #building#. However, canopies, awnings, and marquees associated with entrances to #~~residential~~ buildings# containing #residences# located within a #public plaza# may project more than 15 feet into the #public plaza# and contain vertical supports if they are located entirely within 10 feet of the edge of the #public plaza#.

* * *

37-74
Amenities

* * *

37-743
Lighting and electrical power

#Public plazas# shall be illuminated to provide for safe use and enjoyment of all areas of the #public plaza#. Special attention should be provided in lighting steps and other changes in elevation and areas under tree canopies and permitted canopies within the #public plaza#.

#Public plazas# shall be illuminated with a minimum level of illumination of not less than two horizontal foot candles (lumens per foot) throughout all walkable and sitting areas, including sidewalks directly adjacent to the #public plaza#, and a minimum level of illumination of not less than 0.5 horizontal foot candles (lumens per foot) throughout all other areas. All lighting sources used to satisfy this illumination requirement shall be located outdoors on the subject #zoning lot#. Such level of illumination shall be maintained from one hour before sunset to one hour after sunrise, including #public plazas# that are authorized to close at night. A lighting schedule, including fixtures, wattage and their locations and designs together with a diagram of light level

distribution, with light levels indicated at intervals of no more than every 20 square feet, shall be part of the required detailed design plans. Electrical power shall be supplied by one or more outlets furnishing a total of at least 1,200 watts of power for every 4,000 square feet, or fraction thereof, of the area of a #public plaza#.

All lighting sources that illuminate the #public plaza# and are mounted on or located within #buildings# adjacent to the #public plaza# shall be shielded from direct view. In addition, all lighting within the #public plaza# area shall be shielded to minimize any adverse effect on surrounding #residences# ~~#residential buildings#~~.

* * *

37-78
Compliance

(a) Building permits

* * *

Notwithstanding any of the provisions of Section 11-33 (Building Permits for Minor or Major Development or Other Construction Issued Before Effective Date of Amendment), any #residential plaza# or #urban plaza# for which a certification was granted pursuant to Article II, Chapter 3, or Article III, Chapter 7, between June 4, 2005 and June 4, 2007, and any #public plaza# for which a certification was granted prior to June 10, 2009, may be ~~#developed#~~ provided in accordance with the regulations in effect on the date of such certification.

(b) Periodic compliance reporting

* * *

(e) Special regulations for an #urban plaza# in the #Special Lower Manhattan District#

In addition, the Chairperson of the City Planning Commission may certify any #urban plaza# that is the subject of application N070416ZCM, filed in conjunction with application C070415ZSM, and such #urban plaza# may be ~~#developed#~~ provided in accordance with the regulations of Section 37-04, inclusive, in effect on April 23, 2007, as modified by the special regulations for such #urban plaza# as set forth in Article IX, Chapter 1 (Special Lower Manhattan District) and in the following provisions:

* * *

37-80
ARCADES

The provisions of this Section shall apply to all #developments# and #enlargements# containing an #arcade# that qualifies for a #floor area# bonus pursuant to Sections 24-15, ~~or~~ 33-14 or 43-14.

An #arcade# shall be #developed# as a continuous covered space extending along a #street line#, or #publicly accessible open area#. An #arcade# shall be open for its entire length to the #street line# or #publicly accessible open area#, except for building columns, and unobstructed to a height of not less than 12 feet, and either:

* * *

37-90
PARKING LOTS

37-91
Applicability

C1 C2 C3 C4 C5 C6 C7 C8

In all districts, as indicated, the provisions of Section 37-90 (PARKING LOTS), inclusive, shall apply to ~~all #developments# and #enlargements#, as defined in this Section, that provide an~~ open parking areas ~~#accessory# to #commercial# or #community facility uses#~~ that contain 18 or more spaces or are greater than 6,000 square feet in area~~.~~

~~For the purposes of this Section, #developments# and #enlargements# shall be defined~~ as follows:

(a) #developments# with #accessory# open parking areas ~~shall include only those~~ in which 70 percent or more of the #floor area# on the #zoning lot# is occupied by a #commercial# or #community facility use#; ~~and~~

(b) #enlargements# of a #building# with #accessory# open parking areas or the #enlargement# of an open parking area ~~shall include only those~~ that result in:

(1) an increase in a total number of parking spaces #accessory# to #commercial# or #community facility uses# on the #zoning lot# that is at least 20 percent greater than the number of such spaces existing on November 28, 2007; or

(2) an increase in a total amount of #floor area# on the #zoning lot# that is at least 20 percent greater than the amount of #floor area# existing on November 28, 2007, and where at least 70 percent of the #floor area# on the #zoning lot# is occupied by #commercial# or #community facility uses#; and~~.~~

(c) existing #buildings# with new #accessory# open parking areas in which 70 percent or more of the #floor area# on the #zoning lot# is occupied by a #commercial# or #community facility use#.

All #public parking lots# shall comply with the provisions of Section 37-921 (Perimeter landscaping).

* * *

37-92
Landscaping

37-921
Perimeter landscaping

All open parking areas with 18 spaces or more or 6,000 square feet or more in area that front upon a #street# shall be screened at the #street line# by a perimeter landscaped area at least seven feet in width measured perpendicular to the #street line#. Such perimeter landscaped area may be interrupted only by vehicular entrances and exits. Walkways may also traverse the perimeter landscaped area in order to provide a direct connection between the public sidewalk and a walkway within or adjacent to the open parking area. In the event a perimeter landscaped area is greater than seven feet in width, the first seven feet adjacent to the open parking area must comply with paragraphs (a) and (b) of this Section. The remainder of the landscaped perimeter area may comply with paragraphs (a) and (b) or be comprised of any combination of grass, groundcover, shrubs, trees or other living plant material.

The perimeter landscaped area shall comply with the following requirements:

(a) Grading, drainage and soil

* * *

However, where the Commissioner of Buildings determines that due to the natural

sloping topography of the ~~#development#~~ site the drainage provisions of this paragraph, (a), would be unfeasible for a perimeter landscaped area, such drainage provisions may be waived. In lieu thereof, such perimeter landscaped area shall be comprised of soil with a depth of at least three feet measured from the adjoining open parking area. A raised curb shall edge the perimeter landscaped area and be at least six inches in height. The planting requirements of paragraph (b) of this Section shall apply to such perimeter landscaped areas, except that plantings need not be selected from the lists in Section 37-983.

(b) Plantings

* * *

37-922
Interior landscaping

* * *

(b) Grading, drainage and soil

* * *

However, where the Commissioner of Buildings determines that due to the natural sloping topography of the ~~#development#~~ site the drainage provisions of this paragraph, (b), would be unfeasible for an interior planting island, such drainage provisions may be waived. In lieu thereof, such planting island shall be comprised of soil with a depth of at least three feet measured from the adjoining open parking area. A raised curb shall edge the perimeter landscaped area and be at least six inches in height. The planting requirements of paragraph (c) of this Section shall apply to such planting islands, except that plantings need not be selected from the lists in Section 37-983.

(c) Plantings

* * *

Article IV
Chapter 2
Use Regulations

42-00
GENERAL PROVISIONS

In order to carry out the purposes and provisions of this Resolution, the #uses# of #buildings or other structures# and ~~of tracts of land~~ the open #uses# of #zoning lots#, or portions thereof, have been classified and combined into Use Groups. A brief statement is inserted at the start of each Use Group to describe and clarify the basic characteristics of that Use Group.

* * *

~~**42-02**~~
~~**Study Areas**~~

~~The following areas shall be considered study areas for purposes of state legislation relating to #residential use# contained in Article 7C of the Multiple Dwelling Law.~~

~~(a) In the Borough of Brooklyn:~~

~~(1) In Community District 1:~~

~~The portions of the #Manufacturing Districts# in the areas bounded by the following streets:~~

~~Division Avenue, Wythe Avenue, Berry Street and South 10th Street.~~

~~Berry Street, South 5th Street, Driggs Avenue and South 4th Street.~~

~~Wythe Avenue, South 6th Street, Broadway, Driggs Avenue, South 8th Street.~~

~~Hope Street, Havemeyer Street, Metropolitan Avenue and Roebling Street.~~

~~Wythe Avenue, North 4th Street, North 3rd Street, Berry Street.~~

~~Norman Street, Dobbin Street, Nassau Street and Guernsey Street.~~

~~Calhoun Street, Vandervoort Avenue, Grand Street and Morgan Avenue.~~

~~(2) In Community District 2:~~

~~The #Manufacturing Districts# in the area bounded by Plymouth Street on the north, Bridge Street on the east, Prospect Street to Jay Street to York Street on the south, along York Street to Main Street, to Front Street to Dock Street to Water Street to Washington Street to Plymouth Street.~~

~~The designation of such study areas shall cease to have all force and effect on July 31, 1984, if by that date the Department of City Planning has not filed standard application forms for zoning text or map changes as that Department deems appropriate. If such application forms have been filed by July 31, 1984, the designation of such study areas shall cease to have all force and effect on June 30, 1986.~~

~~**42-03**~~**42-02**
Residential Use

* * *

42-10
USES PERMITTED AS-OF-RIGHT

42-11
Use Groups 4A, 4B, 4C, 5, 6C, 6E, 7A, 9A and 12B

M1

Use Groups 4B, 4C, 5, 6C, 6E, 7A, 9A and 12B as set forth in Sections 32-13, 32-14, 32-15, 32-16, 32-18, 32-21.

Use Group 4A shall be limited to all health facilities requiring approval under Article 28 of the Public Health Law of the State of New York, that prior to July 10, 1974, have received approval of Part I of the required application from the Commissioner of Health, ambulatory diagnostic or treatment health care facilities, as listed in Section 22-14 (Use Group 4) and houses of worship. Such #uses# are not subject to the special permit provision of Sections 42-32 and 74-921.

* * *

42-132
M1-5M and M1-6M Districts

In M1-5M and M1-6M Districts in Manhattan Community Districts 1, 2, 3, 4, 5 and 6, the #conversion# to #dwelling units# of #non-residential ~~non-#residential~~ buildings# or portions thereof, erected prior to December 15, 1961 shall be subject to the provisions of Article I, Chapter 5 (Residential Conversion of Existing Non-Residential Buildings).

In M1-5M and M1-6M Districts, eating or drinking establishments with entertainment and a capacity of more than 200 persons or establishments of any capacity with dancing are permitted only by special permit of the Board of Standards and Appeals in accordance with Section 73-244.

42-133
Provisions for dwelling units in certain M1-5 or M1-6 Districts

* * *

(b) In M1-6 Districts located within the rectangle formed by West 35th Street, Fifth Avenue, West 40th Street and Sixth Avenue, no #dwelling units# shall be permitted, except that:

(1) #dwelling units# which the Chairperson of the City Planning Commission determines were occupied on May 18, 1981 shall be a permitted #use# provided that a complete application to permit such #use# is filed by the owner of the #building# or the occupant of the #dwelling unit# not later than June 21, 1983. For the purposes of Article 7C of the New York State Multiple Dwelling Law, such a determination of #residential# occupancy shall be deemed to permit #residential use# as-of-right for such #dwelling unit#; and

(2) in any #building# for which an alteration application for #conversion# of #floor area# used for non-#residential use# to #dwelling units# or for an #extension# or minor #enlargement# of existing #residential use#, was filed prior to May 18, 1981, #dwelling units# shall be permitted, provided that such alterations shall comply with the regulations in effect on the date of such filing. The right to #convert# to #dwelling units# or #extend# or #enlarge# existing #residential use# pursuant to the provisions of this subsection shall expire one year from July 23, 1981, unless a temporary or permanent certificate of occupancy has been issued.

42-14
Use Group 17

M1 M2 M3

Use Group 17 consists primarily of #manufacturing uses# which:

(1) can conform to high performance standards by controlling objectionable influences; and

(2) in so doing, can limit their impact on adjacent ~~#residential#~~ residential areas; and

(3) normally generate a great deal of traffic, both pedestrian and freight.

* * *

D. Special #uses# in M1-5A and M1-5B Districts

M1-5A M1-5B

(1) #Joint living-work quarters for artists# in #buildings# in M1-5A and M1-5B Districts provided:

* * *

(e) At least 30 percent of the gross roof area of a #building# containing 15 #joint living-work quarters for artists# shall be ~~developed~~ provided for recreational use. For each additional #joint living-work quarters for artists#, 100 square feet of additional roof area shall be ~~developed~~ provided for recreational use up to a maximum of 50 percent of the gross roof area. This recreational area shall be accessible to all the occupants of said #building# and their guests. No fees shall be charged to the occupants or their guests. The provisions of this Section may be modified pursuant to Section 42-141.

* * *

(5) Museums or non-commercial art galleries, subject to the #bulk# regulations applicable for #manufacturing uses#, and subject to the provisions of this Section.

(a) As of right:

In any #building#, a museum or non-commercial art gallery is permitted on the ground floor where a #use# in Use Group 6 is permitted pursuant to the provisions of paragraphs D.(2) or D.(4) of this Section and, above the ground floor where #joint living- work quarters for artists# are permitted, pursuant to paragraph D.(1) of this Section.

(b) By authorization of the City Planning Commission:

In an M1-5A District, the City Planning Commission may authorize a museum or non-commercial art gallery where it is not permitted as-of-right, provided that the Commission finds that:

(i) the #use# of such space as a museum or non-commercial art gallery will not harm #manufacturing uses# in the M1-5A District or the industrial sector of the City's economy;

(ii) any commercial or manufacturing tenants in such space were given the opportunity by the owner or predecessors in title to remain in the space at fair market rentals, and the property owners or predecessors in title did not cause the vacating of the space through harassment, non-renewal of leases, or the charging of rents in excess of the then fair market value; and

(iii) any such museum or non-commercial art gallery will be supportive of the local art industry.

~~The Commission shall refer a copy of any application for authorization pursuant to this Section to the #Industrial Loft Advisory Council#, the Office of Economic Development, and to the Department of Cultural Affairs, each of which shall have thirty days to comment upon such application.~~ The Commission may set such conditions on the grant of an authorization to allow such #uses# as it deems necessary to protect #manufacturing uses# or the industrial sector of the City's economy. In no case shall such museum or non-commercial art gallery occupy more than 65,000 square feet of #floor area#.

* * *

42-142
Modification by authorization of the City Planning Commission of use regulations in M1-5A and M1-5B Districts

In M1-5A and M1-5B Districts, the requirements of Section 42-14 (Use Group 17), paragraphs D.(1)(b), (c), and (d), may be modified by authorization of the City Planning Commission provided that:

(a) such ~~non-#residential~~ #non-residential building# is either a landmark or lies within a Historic District designated by the Landmarks Preservation Commission;

(b) any alterations to the subject #building# required in connection with such #conversion# to #joint living-work quarters for artists# have received a Certificate of Appropriateness or other permit from the Landmarks Preservation Commission; and

(c) a program has been established for continuing maintenance that will result in the preservation of the subject #building# or #buildings# as evidenced by a report from the Landmarks Preservation Commission.

In order to grant an authorization the City Planning Commission shall find that such modification of #use# requirements shall have minimal adverse effects on the conforming #uses# located within the #building# and in the surrounding area.

The City Planning Commission may prescribe appropriate additional conditions and safeguards in order to enhance the character of the ~~#development#~~ subject #building# and to minimize adverse effects on the character of the surrounding area.

* * *

42-20
PERFORMANCE STANDARDS

In all #Manufacturing Districts#, after December 15, 1961, any #use# thereafter established or changed to a #use# listed in Use Group 11A, 16, 17, or 18, and every #building or other structure# or ~~tract of land~~ open area of a #zoning lot# thereafter #developed#, constructed, or used for any #use# listed in Use Group 11A, 16, 17, or 18, shall comply with each and every performance standard governing noise, vibration, smoke and other particulate matter, odorous matter, toxic or noxious matter, radiation hazards, fire and explosive hazards, humidity, heat, or glare applicable to the district in which such #use#, #building or other structure#, or ~~tract of land~~ open area is located.

* * *

42-233
Maximum permitted emission of dust

* * *

(e) Prevention of wind-blown air pollution

In all #Manufacturing Districts#, all storage areas, yards, service roads, or other untreated open areas ~~developed~~ within the boundaries of a #zoning lot# shall be improved with appropriate landscaping or paving, or treated by oiling or any other means as specified in rules and regulations adopted by the Department of Environmental Protection, so that #dust# or other types of air pollution borne by the wind from such sources shall be minimized.

* * *

42-274
Regulations applying to Class II materials or products

Class II materials or products may be stored, manufactured, or utilized in manufacturing processes or other production only in accordance with the following provisions:

(a) In M1 Districts

In M1 Districts, Class II materials or products shall be stored, manufactured, or utilized subject to the following limitations:

(1) such storage, manufacture or utilization shall be carried on only within #buildings or other structures# which are #completely enclosed# by incombustible exterior walls;

(2) such #buildings or other structures# shall either be set back at least 40 feet from any #lot lines#, or in lieu thereof, all such #buildings <u>or other structures</u># shall be protected throughout by an automatic fire extinguishing system which shall comply with the requirements set forth in the Administrative Code, and all such structures as storage tanks shall be protected by a fire extinguishing system which shall comply with the requirements set forth in the Administrative Code; and

(3) the storage of Class II materials or products shall be limited to 100,000 gallons.

* * *

42-275
Regulations applying to Class III materials or products

Class III materials or products may be stored, manufactured, or utilized in manufacturing processes or other production only in accordance with the following provisions:

(a) In M1 Districts

In M1 Districts, Class III materials or products shall not be manufactured in any event, and shall be stored or utilized subject to the following limitations:

(1) such storage or utilization shall be carried on only within #buildings or other structures# which are #completely enclosed# by incombustible exterior walls;

(2) such #buildings or other structures# shall either be set back at least 40 feet from any #lot line#, or, in lieu thereof, all such #buildings <u>or other structures</u># shall be protected throughout by an automatic fire extinguishing system which shall comply with the requirements set forth in the Administrative Code, and all such structures as storage tanks shall be protected by a fire extinguishing system which shall comply with the requirements set forth in the Administrative Code;

* * *

42-40
SUPPLEMENTARY USE REGULATIONS AND SPECIAL PROVISIONS APPLYING ALONG DISTRICT BOUNDARIES

42-41
Enclosure of Commercial or Manufacturing Activities

M1 M2 M3

In all districts, as indicated, all commercial or manufacturing activities established by ~~new~~ #development#, #enlargement#, #extension#, or change of #use#, except storage of materials or products, shall be subject to the provisions of this Section with respect to enclosure, except as otherwise specifically provided in the Use Groups permitted in the district, and in Sections 44-11 (General Provisions) and 44-51 (Permitted Accessory Off-Street Loading Berths). With respect to the #enlargement# or #extension# of an existing #use#, such provisions shall apply to the #enlarged# or #extended# portion of such #use#.

* * *

42-42
Enclosure or Screening of Storage

M1 M2 M3

In all districts, as indicated, all storage of materials or products established by ~~new~~ #development#, #enlargement#, #extension#, ~~or~~ change of #use#, <u>or any new open storage or any increase in the portion of a #zoning lot# used for open storage,</u> shall conform to the provisions of this Section. <u>In addition, new #accessory# open storage or any increase in the portion of a #zoning lot# used for #accessory# open storage shall conform to the provisions of this Section.</u>

With respect to the #enlargement# or #extension# of existing storage of materials or products, such provisions shall apply to the #enlarged# or #extended# portion of such storage.

* * *

42-46
Air Space over a Railroad or Transit Right-of-way or Yard

42-461
Definitions

Words in italics are defined in Section 12-10 or, if applicable exclusively to this Chapter, in this Section.

42-462
Use of railroad or transit air space

M1 M2 M3

* * *

(b) When the #use# of a railroad or transit right-of-way or yard or portion thereof has been permanently discontinued or terminated and ~~is proposed for #development# as~~ a #large-scale ~~residential# or #community facility development# or a #general large-scale~~ development# requiring one or more special permits <u>is proposed</u>, no <u>#use#</u> or #development# of the property shall be allowed until the City Planning Commission has authorized the size and configuration of all #zoning lots# created on such property ~~as part~~

~~of such large-scale #development#~~. As a condition for such authorization, the Commission shall find that:

(1) the proposed #zoning lots#, indicated by a map describing the boundaries of and the total area of each lot, are not excessively large, elongated or irregular in shape and that no #development# on any #zoning lot# would result in the potential for an excessive concentration of #bulk# that would be incompatible with allowable #developments# on adjoining property; and

(2) each resulting #zoning lot# has direct access to one or more #streets#.

* * *

42-47
Residential Uses in M1-D Districts

In M1-1D, M1-2D, M1-3D, M1-4D and M1-5D Districts, new #residences# or #~~residential~~ enlargements# of existing #residences# may be permitted by authorization of the City Planning Commission provided the #zoning lot# existing on June 20, 1988 meets the criteria of paragraph (a), (b), or (c) of this Section.

(a) On #zoning lots# containing #residential# or #community facility uses#, new #residences# or #~~residential~~ enlargements# of existing #residences# may be authorized provided:

(1) the #zoning lot# contains a #building# that has one or more #stories# of lawful #residential# or #community facility uses# and no more than one #story# of #commercial# or #manufacturing uses# therein;

(2) the #zoning lot# contains no other #commercial# or #manufacturing uses#; and

(3) 25 percent or more of the aggregate length of the #block# fronts on both sides of the #street# facing each other is occupied by #zoning lots# containing #residential# or #community facility uses#.

(b) On vacant #zoning lots#, new #residences# may be authorized provided:

(1) the #zoning lot# has been vacant continuously since June 20, l988 or has been vacant continuously for five years prior to the date of application for such authorization;

(2) a #zoning lot# #abutting# on one #side lot line# and fronting on the same #street# is occupied by a ~~#residential# or~~ #community facility building# or a #building# containing #residences#; and

* * *

(d) In determining eligibility for #residential use# pursuant to paragraphs (a), (b) or (c) above, the following regulations shall be applicable:

* * *

(5) For the purposes of this Section, a #through lot# fronting on no more than two #streets# shall be treated as if it consisted of two separate #zoning lots# with abutting #rear lot lines# at a line midway between the two #street lines# upon which such #through lot# fronts. In the case of a #through lot# that fronts on more than two #streets#, the #through lot# portion shall first be considered as if it were so divided, and then any remaining portion shall be considered as if it were a separate #zoning lot#. Notwithstanding, in no event shall contiguous portions of a #through lot# that front on the same #street# be treated as if they were separate #zoning lots#.

Each resulting portion of such #through lot# on each #street# frontage shall be considered separately to determine whether it meets the criteria for new #residences# set forth in paragraphs (a), (b) or (c) above, and only on such portion may new #residences# or ~~#residential~~ enlargements# of existing #residences# be authorized. Only the #lot area# of such portion shall be calculated in determining the permitted amount of #floor area# to be authorized pursuant to this Section.

* * *

Article IV
Chapter 3
Bulk Regulations

43-00
APPLICABILITY AND GENERAL PROVISIONS

43-01
Applicability of this Chapter

The #bulk# regulations of this Chapter apply to any #building or other structure# on any #zoning lot# or portion of a #zoning lot# located in any #Manufacturing District#~~,~~. The #bulk regulations of this Chapter shall also apply to any portion of a #zoning lot# in a #Manufacturing District# that is #developed or #enlarged# with an open #use#. ~~including all new #developments# or #enlargements#~~. In addition, the #bulk# regulations of this Chapter or of specified Sections thereof also apply in other provisions of this Resolution where they are incorporated by cross reference.

Existing #buildings or other structures# which do not comply with one or more of the applicable #bulk# regulations are #non-complying buildings or other structures# and are subject to the regulations set forth in Article V, Chapter 4.

Special regulations applying to #large-scale community facility developments# are set forth in Article VII, Chapter 8.

Special regulations applying only in Special Purpose Districts are set forth in Article VIII, IX, X, XI, and XII.

~~In Manhattan Community Districts 1, 2, 3, 4, 5 and 6, Brooklyn Community Districts 1, 2, 6 and 8, and Queens Community Districts 1 and 2, the conversion to #dwelling units# of #non- # residential buildings#, or portions thereof, erected prior to December 15, 1961 shall be subject to the provisions of Article I, Chapter 5 (Residential Conversion of Existing Non-Residential Buildings) , unless such conversions meet the requirements for new #residential development# of Article II (Residence District Regulations)~~.

In Manhattan Community Districts 1, 2, 3, 4, 5 and 6, Brooklyn Community Districts 1, 2, 6 and 8, and Queens Community Districts 1 and 2, the #conversion# of non-#residential floor area# to #residences# in #buildings# erected prior to December 15, 1961 or January 1, 1977, as applicable, shall be subject to the provisions of Article 1, Chapter 5 (Residential Conversions within Existing Buildings), unless such #conversions# meet the requirements for #residential developments# of Article II (Residence District Regulations).

* * *

43-02
Street Tree Planting in Manufacturing Districts

M1 M2 M3

In all districts, as indicated, all #developments#, or #enlargements# of 20 percent or more in #floor area#, excluding #developments# or #enlargements# in Use Groups 17 or 18, shall provide #street# trees in accordance with Section 26-41 (Street Tree Planting). In addition, any #building# where 20 percent or more of the #floor area# is #converted# from a #manufacturing use# to a #commercial# or #community facility use# shall provide #street# trees in accordance with Section 26-41. The #street# frontage used to calculate the number of required trees may exclude the #street# frontage occupied by curb cuts serving #uses# listed in Use Groups 16B, C and D.

43-10
FLOOR AREA REGULATIONS

* * *

43-12
Maximum Floor Area Ratio

M1 M2 M3

In all districts, as indicated, for ~~any #building# on~~ any #zoning lot#, the maximum #floor area ratio# shall not exceed the #floor area ratio# set forth in the following table, except as otherwise provided in the following Sections:

* * *

~~In #buildings# used partly for~~ For #zoning lots# containing both #community facility use# and ~~partly for~~ #manufacturing# or #commercial use#, the total #floor area# used for #manufacturing# or #commercial use# shall not exceed the amount permitted in the preceding table or by the bonus provisions in Sections 43-13 or 43-14.

Notwithstanding any other provisions of this Resolution, the maximum #floor area ratio# in an M1-6 District shall not exceed 12.0.

43-121
Expansion of existing manufacturing buildings

M1 M2 M3

In all districts, as indicated, where a #building or other structure# used for a conforming #manufacturing use# was in existence prior to December 15, 1961, such #building or other structure# may be expanded for a #manufacturing use#. Such expansion may consist of an #enlargement#, or additional #development#, on the same #zoning lot#, provided that:

(a) the resulting total #floor area# shall not be greater than:

(1) ~~of not more than 50 percent of~~ 150 percent of the #floor area# existing on December 15, 1961;~~,~~ or

(2) ~~an amount resulting in a total #floor area# of not more than~~ 110 percent ~~above~~ of the maximum #floor area# otherwise permitted under the provisions of Section 43-12 (Maximum Floor Area Ratio)~~, whichever is the greater amount~~.

(b) ~~However,~~ the resulting #floor area ratio#, shall ~~be limited to~~ not exceed the ~~greatest~~ the highest of:

(1) ~~1.5 times~~150 percent of the maximum #floor area ratio# otherwise permitted under the provisions of Section 43-12; ~~or~~

(2) 110 percent ~~more than~~ of the #floor area ratio# existing ~~prior to~~ on December 15, 1961~~,~~; or

(3) ~~a maximum #floor area# limited to~~ a #floor area ratio# of 2.4 ~~times the #lot area#, whichever is greater,~~ provided that in the event ~~the 2.4 FAR option~~ this paragraph, (b)(3), is ~~required~~ utilized, the City Planning Commission shall administratively certify and the City Council approve, that ~~the~~ such expansion will not adversely affect the surrounding area.

The parking reduction provisions of Section 44-27 (Special Provisions for Expansion of Existing Manufacturing Buildings) shall apply to such expansion.

43-122
Maximum floor area ratio for community ~~facility buildings~~ facilities

M1

In the districts indicated, for any ~~#community facility building# or for any #building# used partly for~~ #community facility use~~s~~# on a #zoning lot#, the maximum #floor area ratio# shall not exceed the #floor area ratio# set forth in the following table:

* * *

In M1-1D, M1-2D, M1-3D, M1-4D and M1-5D Districts, for any ~~#building#~~ #zoning lot# ~~used partly for~~ containing both #residential use# and ~~partly for~~ #community facility use#, the total #floor area# used for #residential use# shall not exceed the amount permitted in Section 43-61 (Bulk Regulations for Residential Uses in M1-D Districts).

* * *

43-171
Minor modifications

* * *

~~A developer~~ The applicant must send a copy of any request for a modification pursuant to this Section to the applicable Community Board at least twenty days prior to the next regularly scheduled Community Board meeting.

43-20
YARD REGULATIONS

Definitions and General Provisions

* * *

43-23
Permitted Obstructions in Required Yards or Rear Yard Equivalents

In all #Manufacturing Districts#, the following ~~shall not be considered~~ obstructions ~~when located~~ shall be permitted within a required #yard# or #rear yard equivalent#:

(a) In any #yard# or #rear yard equivalent#:

Arbors or trellises;

Awnings or canopies;

Chimneys, projecting not more than three feet into, and not exceeding two percent of the area of, the required #yard# or #rear yard equivalent#;

Eaves, gutters or downspouts, projecting into such #yard# or #rear yard equivalent# not more than 16 inches or 20 percent of the width of such #yard# or #rear yard equivalent#, whichever is the lesser distance;

Fences;

Flagpoles;

Parking spaces for automobiles or bicycles, off-street, open, #accessory#;

Steps and ramps for persons with physical disabilities;

Terraces or porches, open;

Walls, not exceeding eight feet in height and not roofed or part of a #building#;

* * *

43-27
Special Provisions for Shallow Interior Lots

M1 M2 M3

In all districts, as indicated, if an #interior lot# ~~consists entirely of a tract of land that~~:

(a) was owned separately and individually from all other adjoining tracts of land, both on December 15, 1961 and on the date of application for a building permit; and

(b) is less than 70 feet deep,

the depth of a required #rear yard# for such #interior lot# may be reduced by one foot for each two feet by which the maximum depth of a #zoning lot# is less than 70 feet. No #rear yard# is required on any #interior lot# with a maximum depth of less than 50 feet.

43-28
Special Provisions for Through Lots

M1 M2 M3

In all districts, as indicated, no #rear yard# regulations shall apply ~~to a #building#~~ on any #through lot# which extends less than 110 feet in maximum #lot depth# from #street# to #street#. However, on any #through lot# 110 feet or more in maximum depth from #street# to #street#, one of the following #rear yard equivalents# shall be provided, except that in the case of a #zoning lot# occupying an entire #block#, no #rear yard# or #rear yard equivalent# shall be required:

* * *

43-40
HEIGHT AND SETBACK REGULATIONS

* * *

43-42
Permitted Obstructions

In all #Manufacturing Districts#, the following ~~shall not be considered~~ obstructions shall be permitted to ~~and may thus~~ penetrate a maximum height limit or a #sky exposure plane# set forth in Sections 43-43 (Maximum Height of Front Wall and Required Front Setbacks), 43-44 (Alternate Front Setbacks) or 43-49 (Limited Height Districts).

(a) Chimneys or flues, with a total width not exceeding 10 percent of the #aggregate width of street walls# of a #building# at any given level;

(b) Elevator or stair bulkheads, roof water tanks or cooling towers (including enclosures),

each having an #aggregate width of street walls# equal to not more than 30 feet. However, the product, in square feet, of the #aggregate width of street walls# of such obstructions facing each #street# frontage, times their average height, in feet, shall not exceed a figure equal to four times the width, in feet, of the #street wall# of the #building# facing such frontage. For the purposes of this paragraph (b), #abutting buildings# on a single #zoning lot# may be considered to be a single #building#;

* * *

(h) Building columns having an aggregate width equal to not more than 20 percent of the #aggregate width of street walls# of a #building# are a permitted obstruction, to a depth not exceeding 12 inches, in an #initial setback distance#, optional front open area, or any other required setback distance or open area set forth in Sections 43-43, 43-44 or 43-45 (Tower Regulations).

43-43
Maximum Height of Front Wall and Required Front Setbacks

M1 M2 M3

In all districts, as indicated, if the front wall or any other portion of a #building or other structure# is located at the #street line# or within the #initial setback distance# as set forth in the following table, the height of such front wall or other portion of a #building or other structure#, except as otherwise set forth in this Section, shall not exceed the maximum height above #curb level# set forth in the following table. Above such maximum height and beyond the #initial setback distance#, the #building or other structure# shall not penetrate the #sky exposure plane# set forth in the following table.

The regulations of this Section shall apply except as otherwise provided in Sections 43-42 (Permitted Obstructions), 43-44 (Alternate Front Setbacks) or 43-45 (Tower Regulations). In M1-1 Districts, for #community facility buildings# the maximum height of a front wall shall be 35 feet or three #stories#, whichever is less, and the height above the #street line# shall be 35 feet, and in M1-4 Districts, for #community facility buildings#, the maximum height of a front wall shall be 60 feet or six #stories#, whichever is less.

MAXIMUM HEIGHT OF FRONT WALL
AND REQUIRED FRONT SETBACKS

#Initial Setback Distance# (in feet)		Maximum Height of a Front Wall, or other Portion of a #Building or other Structure# within the #Initial Setback Distance#	Height above #Street Line# (in feet)	#Sky Exposure Plane# Slope over #Zoning Lot# (expressed as a ratio of vertical distance to horizontal distance)			
				On #Narrow Street#		On #Wide Street#	
On #Narrow Street#	On #Wide Street#			Verti-cal Dis-tance	Hori-zon-tal Dis-tance	Verti-cal Dis-tance	Hori-zon-tal Dis-tance
District: M1-1							

20	15	30 feet or 2 #stories#, whichever is less	30	1 to	1	1 to	1
Districts: M1-2 M1-4 M2-1 M2-3 M3							
20	15	60 feet or 4 #stories#, whichever is less	60	2.7 to	1	5.6 to	1
Districts: M1-3 M1-5 M1-6 M2-2 M2-4							
20	15	85 feet or 6 #stories#, whichever is less	85	2.7 to	1	5.6 to	1

* * *

Supplementary Regulations

43-45
Tower Regulations

M1-3 M1-4 M1-5 M1-6

In the districts indicated, any #building# or #buildings# or portion thereof which in the aggregate occupy not more than 40 percent of the #lot area# of a #zoning lot# or, for #zoning lots# of less than 20,000 square feet, the percent set forth in Section 43-451 (Towers on small lots), may penetrate an established #sky exposure plane#. (Such #building# or portion thereof is hereinafter referred to as a tower.) At any given level, such tower may occupy any portion of the #zoning lot# not located less than 15 feet from the #street line# of a #narrow street#, or less than 10 feet from the #street line# of a #wide street#, provided that the aggregate area so occupied within 50 feet of a #narrow street# shall not exceed 1,875 square feet and the aggregate area so occupied within 40 feet of a #wide street# shall not exceed 1,600 square feet.

If all of the #buildings# on a #zoning lot# containing ~~of which~~ such tower ~~is a portion does~~ do not occupy at any level more than the maximum percent of the #lot area# set forth in this Section or Section 43-451 for towers, the tower may occupy any portion of the #zoning lot# ~~not~~ located ~~less than~~ 20 feet or more from the #street line# of a #narrow street# or ~~less than~~ 15 feet or more from the #street line# of a #wide street#, provided that the aggregate area so occupied within 50 feet of a #narrow street# shall not exceed 2,250 square feet and the aggregate area so occupied within 40 feet of a #wide street# shall not exceed 2,000 square feet.

* * *

43-50
COURT REGULATIONS AND MINIMUM DISTANCE BETWEEN WINDOWS AND WALLS OR LOT LINES

Basic Regulations

43-51
Minimum Dimensions of Courts for ~~Community Facility~~ Buildings Containing Community Facility Uses

M1

In the district indicated, the regulations set forth in the following Sections shall apply to all #buildings# containing #community facility uses#:

* * *

43-60
SUPPLEMENTARY REGULATIONS

43-61
Bulk Regulations for Residential Uses in M1-D Districts

The following regulations shall apply to any ~~new #building#~~ #development# or ~~#residential~~ enlargement# authorized pursuant to Section 42-47 (Residential Uses in M1-D Districts):

(a) The total amount of #residential floor area# permitted ~~in~~ on any ~~#building#~~ #zoning lot# shall not exceed a #floor area ratio# of 1.65.

~~In #buildings# used partly for~~ On #zoning lots# containing both #residential use# and ~~partly for~~ #community facility#, #manufacturing# or #commercial use#, the maximum #floor area# shall be the maximum #floor area# permitted for either the #commercial# or #manufacturing# ~~portion of such #building#~~ #use# as set forth in Sections 43-12 (Maximum Floor Area Ratio) through 43-14 (Floor Area Bonus for Arcades), or the #community facility# ~~portion of such #building#~~ #use# as set forth in Section 43-122 (Maximum floor area ratio for community facility buildings), or the #residential# ~~portion of such #building#~~ #use# as set forth in this Section, whichever permits the greatest amount of #floor area#.

~~In #buildings# used partly for~~ On #zoning lots# containing both #residential use# and ~~partly for~~ #manufacturing# or #commercial use#, the total #floor area# used for #manufacturing# or #commercial use# shall not exceed the amount permitted by Sections 43-12 through 43-14.

(b) The maximum number of #dwelling units# shall equal the total #residential floor area# provided ~~in~~ on the ~~#building#~~ #zoning lot# divided by 675. Fractions equal to or greater than three quarters resulting from this calculation shall be considered to be one #dwelling unit#.

(c) The maximum #building# height above #curb level# shall be 32 feet ~~for any new #residential building# or #enlarged# portion~~.

(d) No such #development# ~~#residential building#~~ or ~~#residential~~ enlargement# shall be permitted within 30 feet of the #rear lot line#.

(e) The maximum distance from the #street line# to the #street wall# of ~~any new #building developed# pursuant to this Section~~ such #development# shall be ten feet, unless modified by the Commission pursuant to Section 44-28 (Parking Regulations for Residential Uses in M1-D Districts).

* * *

Article IV
Chapter 4
Accessory Off-Street Parking and Loading Regulations

44-00
GENERAL PURPOSES AND DEFINITIONS

Off-street Parking Regulations

* * *

44-20
REQUIRED ACCESSORY OFF-STREET PARKING SPACES FOR MANUFACTURING, COMMERCIAL OR COMMUNITY FACILITY USES

44-21
General Provisions

M1 M2 M3

In all districts, as indicated, #accessory# off-street parking spaces, open or enclosed, shall be provided in conformity with the requirements set forth in the table in this Section for all ~~new~~ #development# after December 15, 1961, for the #manufacturing#, #commercial# or #community facility uses# listed in the table. In addition, all other applicable requirements of this Chapter shall apply as a condition precedent to the #use# of such #development#.

<u>After December 15, 1961, if an #enlargement# results in a net increase in the #floor area# or other applicable unit of measurement specified in the table in this Section, the same requirements set forth in the table shall apply to such net increase in the #floor area# or other specified unit of measurement.</u>

A parking space is required for a portion of a unit of measurement one-half or more of the amount set forth in the table.

For the purposes of this Section, a tract of land on which a group of such #uses# is #developed# under single ownership or control shall be considered a single #zoning lot#.

For those #uses# for which rated capacity is specified as the unit of measurement, the Commissioner of Buildings shall determine the rated capacity as the number of persons which may be accommodated by such #uses#.

~~After December 15, 1961, if an #enlargement# results in a net increase in the #floor area# or other applicable unit of measurement specified in the table in this Section, the same requirements set forth in the table shall apply to such net increase in the #floor area# or other specified unit of measurement.~~

The requirements of this Section shall be waived in the following situations:

(a) when, as the result of the application of such requirements, a smaller number of spaces would be required than is specified by the provisions of Section 44-23 (Waiver of Requirements for Spaces Below Minimum Number);

(b) when the Commissioner of Buildings has certified, in accordance with the provisions of Section 44-24 (Waiver of Requirements for All Zoning Lots Where Access Would Be Forbidden), that there is no way to arrange the spaces with access to the #street# to conform to the provisions of Section 44-43 (Location of Access to the Street);

(c) for houses of worship, in accordance with the provisions of Section 44-25 (Waiver for Locally Oriented Houses of Worship).

* * *

44-27
Special Provisions for Expansion of Existing Manufacturing Buildings

M1 M2 M3

In all districts, as indicated, whenever an existing #manufacturing building# ~~building#~~ is expanded pursuant to the provisions of Section 43-121 (Expansion of existing manufacturing buildings), the City Planning Commission may reduce, up to a maximum of 40 spaces, the parking requirements of Sections 44-21 (General Provisions) or 44-22 (Special Provisions for a Single Zoning Lot with Uses Subject to Different Parking Regulations), provided the Commission certifies:

(a) that because of site limitations such a reduction is necessary for the proper design and operation of the #manufacturing building# ~~building#~~; and

(b) that off-site parking and mass transit facilities are adequate to satisfy the additional parking demand generated by the expansion.

* * *

44-28
Parking Regulations for Residential Uses in M1-D Districts

In M1-1D, M1-2D, M1-3D, M1-4D and M1-5D Districts, the regulations of this Section shall apply to #residential uses# authorized pursuant to Section 42-47 (Residential Uses in M1-D Districts).

(a) In M1-1D Districts, for any new ~~#residential building#~~ #residence# authorized pursuant to Section 42-47, one #accessory# parking space shall be provided for each #dwelling unit#. The Commission may reduce this requirement if the Commission determines that there is sufficient on-street parking space available to meet the needs of the new ~~#development#~~ #residence#.

* * *

44-40
ADDITIONAL REGULATIONS FOR PERMITTED OR REQUIRED OFF-STREET PARKING SPACES

* * *

44-42
Size and Identification of Spaces

M1 M2 M3

(a) Size of Spaces

In all districts, as indicated, for all #accessory# off-street parking spaces, open or enclosed, each 300 square feet of unobstructed standing or maneuvering area shall be considered one parking space. However, an area of less than 300 square feet, but in no event less than 200 square feet, may be considered as one space, where the layout and design of the parking area are adequate to permit convenient access and maneuvering in accordance with regulations promulgated by the Commissioner of Buildings, or where the ~~developer or~~ applicant for a building permit or certificate of occupancy certifies that such spaces will be fully attended.

In any case where a reduction of the required area per parking space is permitted on the basis of the ~~developer's~~ applicant's certification that such spaces will be fully attended, it

shall be set forth in the certificate of occupancy that paid attendants employed by the owners or operators of such spaces shall be available to handle the parking and moving of automobiles at all times when such spaces are in use.

In no event shall the dimensions of any parking stall be less than 18 feet long and eight feet, six inches wide.

* * *

44-47
Parking Lot Maneuverability and Curb Cut Regulations

M1 M2 M3

In all districts, as indicated, the provisions of this Section shall apply to: ~~all #developments# and #enlargements# that provide an open parking area #accessory# to #commercial# or #community facility uses#. All such #developments# and #enlargements# shall submit a site plan to the Department of Buildings showing the location of all parking spaces, curb cuts, and compliance with the maneuverability standards shown in paragraphs (b) and (c) of Section 36-58.~~

~~For the purposes of this Section, #developments# and #enlargements# shall be defined as follows~~:

(a) #developments# with #accessory# open parking areas ~~shall include only those~~ in which 70 percent or more of the #floor area# on the #zoning lot# is occupied by a #commercial# or #community facility use#; ~~and~~

(b) #enlargements# of a #building# with #accessory# open parking areas ~~shall include only those~~ or the #enlargement# of an open parking area that result in:

(1) an increase in the ~~a~~ total number of parking spaces #accessory# to #commercial# or #community facility use# on the #zoning lot# that is at least 20 percent greater than the number of such spaces existing on November 28, 2007; or

(2) an increase in the ~~a~~ total amount of #floor area# on the #zoning lot# that is at least 20 percent greater than the amount of #floor area# existing on November 28, 2007, and where at least 70 percent of the #floor area# on the #zoning lot# is occupied by #commercial# or #community facility uses#~~.~~; and

(c) existing #buildings# with new #accessory# open parking areas in which 70 percent or more of the #floor area# on the #zoning lot# is occupied by a #commercial# or #community facility use#.

The provisions of this Section shall not apply to surface parking located on the roof of a #building#, indoor parking garages, #public parking garages#, structured parking facilities, or #developments# or #enlargements# in which at least 70 percent of the #floor area# or #lot area# on a #zoning lot# is used for automotive #uses# listed in Use Groups 9 or 16.

For the purposes of this Section, an “open parking area” shall mean that portion of a #zoning lot# used for the parking or maneuvering of vehicles, including service vehicles, which is not covered by a #building#. Open parking areas shall also include all required landscaped areas within and adjacent to the open parking area.

For all such new or #enlarged# open parking areas, a site plan shall be submitted to the Department of Buildings showing the location of all parking spaces, curb cuts and compliance with the maneuverability standards set forth in this Section.

44-48
Parking Lot Landscaping

M1 M2 M3

In all districts, as indicated, all #developments# and #enlargements# containing #commercial# or #community facility uses# and new open parking areas #accessory# to #commercial# or #community facility uses# shall comply with the provisions of Section 37-90 (PARKING LOTS), inclusive.

* * *

Off-street Loading Regulations

44-50
GENERAL PURPOSES

* * *

44-52
Required Accessory Off-Street Loading Berths

M1 M2 M3

In all districts, as indicated, #accessory# off-street loading berths, open or enclosed, shall be provided in conformity with the requirements set forth in the table in this Section and under rules and regulations promulgated by the Commissioner of Buildings, for all ~~new~~ #development# after December 15, 1961, for the #community facility#, #commercial#, or #manufacturing uses# listed in the table, except as otherwise provided in Sections 44-53 (Special Provisions for a Single Zoning Lot with Uses Subject to Different Loading Requirements) or 44-54 (Wholesale, Manufacturing or Storage Uses Combined with Other Uses), as a condition precedent to the #use# of such #development#.

After December 15, 1961, if the #use# of any #building or other structure# or #zoning lot# is changed or #enlarged#, the requirements set forth in the table shall apply to the #floor area# of the changed or #enlarged# portion of such #building# or of the #lot area# used for such #use#.

For the purposes of this Section, a tract of land on which a group of such #uses# is #developed# under single ownership or control shall be considered a single #zoning lot#.

Whenever any #use# specified in the table is located on an open lot, the requirements set forth in the table for #floor area# shall apply to the #lot area# used for such #use#.

~~After December 15, 1961, if the #use# of any #building or other structure# or #zoning lot# is changed or #enlarged#, the requirements set forth in the table shall apply to the #floor area# of the changed or #enlarged# portion of such #building# or of the #lot area# used for such #use#.~~

REQUIRED OFF-STREET LOADING BERTHS FOR
~~NEW CONSTRUCTION~~ DEVELOPMENTS,
ENLARGEMENTS OR CHANGES OF USE

* * *

\

Article V
Chapter 2
Non-Conforming Uses

52-00
DEFINITIONS AND GENERAL PROVISIONS

* * *

52-30
CHANGE OF NON-CONFORMING USE

52-31
General Provisions

For the purposes of this Chapter, a change of #use# is a change to another #use# listed in the same or any other Use Group. However, a change in ownership or occupancy shall not, by itself, constitute a change of #use#.

A #non-conforming use# may be changed to any conforming #use#, and the applicable district #bulk# regulations and #accessory# off-street parking requirements shall not apply to such change of #use# or to alterations made in order to accommodate such conforming #use#, but shall apply to any #enlargement#.

In all zoning districts which mandate compliance with the Quality Housing Program, the provisions of Article II, Chapter 8, shall apply to such change of #use#.

However, not withstanding the provisions above, in Manhattan Community Districts 1, 2, 3, 4, 5 and 6, Brooklyn Community Districts 1, 2, 6 and 8, and Queens Community Districts 1 and 2, the #conversion# ~~to #dwelling units#~~ of non-#residential ~~buildings~~ floor area# ~~, or portions thereof, erected prior to December 15, 1961,~~ to #residences# shall be subject to the provisions of Article I, Chapter 5 (Residential Conversion ~~of~~ within Existing ~~Non-Residential~~ Buildings), unless such #conversions# meet the requirements for ~~new #residential development#~~ #residences# of Article II (Residence District Regulations).

A #non-conforming use# may be changed to another #non-conforming use# only in accordance with the provisions of this Chapter.

Any such change of #use# permitted by this Chapter shall conform to the applicable district regulations on #accessory# off-street loading berths as set forth in Section 52-41 (General Provisions) and on #accessory signs#, except that in #Residence Districts# such change shall conform to the regulations on #accessory signs# applicable in a C1 District.

In Community Districts 1, 2, 3, 4, 5, 6, 7 and 8 in the Borough of Manhattan and a portion of Community Districts 1 and 2 in the Borough of Queens, a #non-conforming use# may be changed to a #public parking garage# or #public parking lot# in Use Groups 8 and 12D only pursuant to the provisions of Article I, Chapter 3.

In the case of a conflict between these provisions and retail continuity provisions that apply to the ground floor of #buildings#, a #non-conforming use# on the ground floor in such #building# may be changed only to a #conforming use#.

* * *

52-34
Commercial Uses in Residence Districts

In all #Residence Districts#, a #non-conforming use# listed in Use Group 6, 7, 8, 9, 10, 11B, 12, 13, 14 or 15 may be changed, initially or in any subsequent change, only to a conforming #use#

or to a #use# listed in Use Group 6. In the case of any such change, the limitation on #floor area# set forth in Section 32-15 (Use Group 6) shall not apply. Eating or drinking places, ~~including those which provide incidental musical entertainment either by mechanical device or by not more than three persons playing piano, organ, accordion, guitar or any string instrument~~ with musical entertainment, but not dancing, thus permitted as a change of #use# shall be limited exclusively to the sale of food or drink for on-premises consumption by seated patrons within a #completely enclosed building#.

* * *

52-40
ENLARGEMENTS OR EXTENSIONS

52-41
General Provisions

A #non-conforming use# may be #enlarged# or #extended# within the district in which such #non-conforming use# is located only in accordance with the provisions of this Chapter. However, a #non-conforming single-# or #two-family residence# in an R3, R4, or R5 District may be #enlarged# or #extended# in accordance with the #bulk# regulations specified for the district in which it is located. Furthermore, #enlargements# or #extensions# designed exclusively to permit conformity with the regulations on performance standards or in order to provide required #accessory# off-street parking spaces or off-street loading berths on the same #zoning lot# as the #use# to which such spaces or berths are #accessory# are not subject to the restrictions set forth herein.

For the purposes of this Section and Sections 52-31 (General Provisions), 52-42 (C6, C8 or Manufacturing Districts) and 52-43 (C1 or C4 Districts), the applicable district regulations on #accessory# off-street parking spaces or loading berths shall be determined in accordance with the following tables. The term "required" as used in this Section shall mean some or all of, but not more than, the number of spaces or berths which would be required by such applicable district regulations for ~~new~~ #development# for such #use#.

* * *

For #non-conforming use# in #Residence Districts#, #accessory# off-street parking spaces or loading berths shall be subject to the provisions of Sections 25-66 or 25-77 (Screening).

In Community Districts 1, 2, 3, 4, 5, 6, 7 and 8 in the Borough of Manhattan and a portion of Community Districts 1 and 2 in the Borough of Queens, #enlargements# or #extensions# of #non-conforming uses# which involve the provision of off-street parking are subject to the regulations set forth in Article I, Chapter 3.

In the case of a conflict between these provisions and retail continuity provisions that apply to the ground floor of #buildings#, a #non-conforming use# on the ground floor in such #building# may be changed only to a #conforming use#.

* * *

52-44
Residence Districts Except R1 and R2 Districts

In all #Residence Districts#, except R1 and R2 Districts, a fire station may be #enlarged# or #extended# provided that:

* * *

#Community facility bulk# ~~#bulk#~~ regulations as set forth in Article II, Chapter 4 shall apply to such #enlarged# or #extended# fire stations.

52-45
Non-Conforming Residential Uses in M1 Districts

In an M1 District, a #non-conforming residential use# occupying at least 50 percent of the #floor area# of a #building# which was #designed for residential use# and erected prior to December 15, 1961, may be #extended# on the ground floor level provided that no #~~residential use~~ dwelling unit or rooming unit# may be located on or below a #story# occupied by a #commercial# or #manufacturing use#. The total number of #~~rooms~~# #dwelling units# or #rooming units# in the #building# may not be increased by more than one for each ~~200~~ 400 square feet of #residential floor area# created by such #extension#.

* * *

52-50
DAMAGE OR DESTRUCTION

* * *

52-52
Land with Minor Improvements

In all districts, if a #non-conforming building or other structure# or other improvement located on #land with minor improvements# is damaged or destroyed by any means, including but not limited to any demolition ordered or permitted by the Department of Buildings, to the extent of 25 percent or more of the assessed valuation of all #buildings or other structures# or other improvements thereon (as determined from the assessment rolls effective on the date of damage or destruction), such #non-conforming use# shall terminate, and the ~~tract of land~~ #zoning lot# shall thereafter be used only for a conforming #use#.

52-53
Buildings or Other Structures in All Districts

52-531
Permitted reconstruction or continued use

In all districts, if any #building#, except a #building# subject to the provisions of Section 52-54 (Buildings Designed for Residential Use in Residence Districts), or of Section 52-56 (Multiple Dwellings in M1-D Districts), which is substantially occupied by a #non-conforming use# is damaged or destroyed by any means, including any demolition as set forth in Sections 52-50 et seq., to the extent of 50 percent or more of its total #floor area#, such #building# may either:

(a) be repaired or #incidentally altered#, and the existing #non-conforming use# may be continued; or

(b) be reconstructed, but only for a conforming #use#; provided, however, that in no event shall any such reconstruction create a #non-compliance# or increase the degree of #non-compliance# of a #non-complying building#.

However, where the damage or destruction is so great that the provisions in Sections 54-41 and 54-42 relating to Damage, Destruction or Demolition in Non-Complying Buildings also apply, the latter Sections shall govern the permitted #bulk# of the reconstructed #building#.

In addition, the alteration of an existing #building# resulting in both the removal of more than 75 percent of the #floor area# and more than 25 percent of the perimeter walls of such existing #building#, and the replacement of any portion thereof, shall be considered a #development# for the purposes of the provisions set forth in Section 11-23 (Demolition and Replacement).

In applying the provisions of this Section to damaged or destroyed structures, substantially

utilized by a #non-conforming use#, any appropriate measure of the size of such structures shall be substituted for #floor area# in determining the extent of damage or destruction.

In the event that any demolition, damage or destruction of an existing #building# produces an unsafe condition requiring a Department of Buildings order or permit for further demolition of #floor area# to remove or rectify the unsafe condition, and the aggregate #floor area# demolished, damaged or destroyed including that ordered or permitted by the Department of Buildings constitutes 50 percent or more of the total #floor area# of such #building#, then such #building# may be repaired or reconstructed only in accordance with the provisions of paragraph (a) or (b) above.

For the purposes of this Section, any #single-family# or #two-family residence# located within an M1-1D, M1-2D, M1-3D M1-4D or M1-5D District and existing on June 20, 1988 shall be a conforming #use#.

For the purposes of this Section, #buildings# that #abutted# one another on a single #zoning lot# on the date of such damage or destruction shall be considered a single #building#.

* * *

52-55
Lesser Damage or Destruction

In the event that a #building or other structure# substantially occupied or utilized by a #non-conforming use# is damaged or destroyed to a lesser extent than that specified in Sections 52-51 to 52-54, inclusive, relating to Damage, Destruction or Demolition the #building or other structure# may be restored and the #non-conforming use# of such #building or other structure# or ~~tract of land~~ #zoning lot# may be continued, provided that such restoration shall not create a #non-compliance# or increase the degree of #non-compliance#, if any, existing prior to such damage, destruction or demolition.

52-56
Multiple Dwellings in M1-D Districts

In the case of damage or destruction of less than 75 percent of the total #floor area# of a #non-conforming ~~residential~~ building# containing three or more #dwelling units# in an M1-1D, M1-2D, M1-3D, M1-4D or M1-5D District, such #building# may be repaired or reconstructed, and its #residential use# continued, subject to the following regulations:

(a) there shall be no increase in the number of #dwelling units# in the #building# beyond the lawful number in existence prior to such damage and destruction; and

(b) there shall be no increase to the pre-existing amount of #floor area# except as expressly provided in Section 52-46 (Conforming and Non-conforming Residential Uses in M1-D Districts).

#Enlargements# in excess of those permitted above, and #enlargements# that create additional #dwelling units# may be permitted by authorization of the City Planning Commission pursuant to the regulations of Section 42-47 (Residential Uses in M1-D Districts).

52-60
DISCONTINUANCE

* * *

52-62
~~Residential~~ Buildings Containing Residences in M1-D Districts

In M1-1D, M1-2D, M1-3D, M1-4D and M1-5D Districts, vacant #floor area# in a #building#

originally designed as #dwelling units# or #rooming units# may be occupied by a #residential use# provided that the requirements of either paragraph (a) or (b) are met.

(a) #Residential uses# in such #buildings# may be reactivated as-of-right, provided:

(1) the #floor area# has been continuously vacant for two years or more;

(2) the #street line# of the #zoning lot# upon which the discontinued #building# stands does not exceed 60 feet in length (or, in the case of a #corner lot#, the #lot area# does not exceed 6800 square feet); and

(3) the #zoning lots# #abutting# on both #side lot lines# and fronting on the same #street# (or #streets#, if a #corner lot#) are occupied by #buildings designed for residential use# and contain no #manufacturing uses#.

(b) #Residential uses# in such #buildings# may be reactivated by authorization of the City Planning Commission, provided:

(1) the #floor area# has been continuously vacant for two years or more;

(2) the #street line# of the #zoning lot# upon which the discontinued #building# stands does not form a continuous frontage with vacant land or #land with minor improvements# whose aggregate length exceeds 60 feet (or, in the case of a #corner lot#, the #lot area# does not exceed 6800 square feet);

(3) the #zoning ~~lot#~~ lot abutting# on one #side lot line# and fronting on the same #street# is occupied by either:

(i) a #building designed for residential use# or a #community facility building#; or

(ii) a #building# originally designed as #dwelling units# or #rooming units# for which an application to reactivate #residential use# in such #building# has been combined with the subject application;

(4) 25 percent or more of the aggregate length of the #block# fronts on both sides of the #street# facing each other is occupied by #zoning lots# containing ~~#residential# or~~ #community facility buildings# or #buildings# containing #residences#; and

(5) the Commission finds that:

(i) reactivating the #residential use# will not adversely affect #manufacturing# or #commercial uses# in the district; and

(ii) such #residential use# will not be exposed to excessive noise, smoke, dust, noxious odor, or other adverse impacts from #manufacturing# or #commercial uses#.

In granting such authorization, the Commission may prescribe additional conditions and safeguards as the Commission deems necessary.

The number of #dwelling units# permitted in such reactivated ~~#residential~~ building# containing #residences# shall not exceed the greater of the number of lawful #dwelling units# last recorded by the Department of Buildings, or one #dwelling unit# for every 675 square feet of total net #residential floor area# as defined in Section 28-02 (Definitions).

No #dwelling unit# shall be permitted on or below a #story# occupied by a #commercial# or #manufacturing use#.

#Residential uses# in M1-D Districts may #enlarge# pursuant to the regulations of Section 52-46

(Conforming and Non-conforming Residential Uses in M1-D Districts) or of Section 42-47 (Residential Uses in M1-D Districts) as applicable.

* * *

Article V
Chapter 4
Non-Complying Buildings

54-00
GENERAL PROVISIONS

* * *

54-30
ENLARGEMENTS OR CONVERSIONS

54-31
General Provisions

Except as otherwise provided in Section 54-313, a #non-complying building or other structure# may be #enlarged# or #converted#, provided that no #enlargement# or #conversion# may be made which would either create a new #non-compliance# or increase the degree of #non-compliance# of a #building or other structure# or any portion thereof.

54-311
Buildings non-complying as to density regulations

If a #building# or portion of a #building# has more #rooming units# than are permitted by the applicable district regulations, such #building# may be #converted# to #dwelling units# in accordance with the provisions of Section 15-111 (Number of permitted dwelling units).

* * *

54-40
DAMAGE OR DESTRUCTION IN NON-COMPLYING BUILDINGS

For the purposes of this Section, #buildings# that #abutted# one another on a single #zoning lot# on the date of such damage or destruction shall be considered a single #building#.

54-41
Permitted Reconstruction

If a #non-complying building or other structure# is damaged or destroyed by any means, including any demolition as set forth in this Section, to the extent of 75 percent or more of its total #floor area#, such #building# may be reconstructed only in accordance with the applicable district #bulk# regulations, except in the case of a one- or #two-family residence#, such #residence# may be reconstructed provided that such reconstruction shall not create a new #non-compliance# nor increase the pre-existing degree of #non-compliance# with the applicable #bulk# regulations. If the extent of such damage or destruction is less than 75 percent, a #non-complying building# may be reconstructed provided that such reconstruction shall not create a new #non-compliance# nor increase the pre-existing degree of #non-compliance# with the applicable #bulk# regulations.

In addition, the alteration of such existing #building# resulting in both the removal of more than 75 percent of the #floor area# and more than 25 percent of the perimeter walls of such existing #building#, and the replacement of any portion thereof, shall be considered a #development# for the purposes of the provisions set forth in Section 11-23 (Demolition and Replacement).

In the event that any demolition, damage or destruction of an existing #building# other than one-

or #two-family residences# produces an unsafe condition requiring a Department of Buildings order or permit for further demolition of #floor area# to remove or rectify the unsafe condition, and the aggregate #floor area# demolished, damaged or destroyed including that ordered or permitted by the Department of Buildings constitutes 75 percent or more of the total #floor area# of such #building#, then such #building# may be reconstructed only in accordance with the applicable district #bulk# regulations.

* * *

Article VI, Chapter 2

Chapter 2
Special Regulations Applying in the Waterfront Area

* * *

62-11
Definitions

Definitions specially applicable to this Chapter are set forth in this Section. The definitions of other defined terms are set forth in Section 12-10 (DEFINITIONS).

Development

For the purposes of this Chapter, a "development" shall also include:

(a) an #enlargement# ~~, or~~ ;

(b) any ~~other~~ alteration that increases the height or coverage of an existing #building or other structure#;

~~(b) an #enlargement# that increases the portion of a tract of land occupied by an existing #use#~~

(c) an #extension#; or

(d) a change of #use# from one Use Group to another, or from one #use# to another in the same Use Group, or from one ~~#waterfront area~~ use# ~~classification~~ listed in Section 62-21(Classification of Uses in the Waterfront Area) to another such #use#.

* * *

Visual corridor

A "visual corridor" is a public #street# or ~~tract of land~~ open area within ~~a #block#~~ one or more #zoning lots# that provides a direct and unobstructed view to the water from a vantage point within a public #street#, #public park# or other public place.

* * *

62-12
Applicability to Developments in the Waterfront Area

Within the #waterfront area#, all #developments# on #zoning lots# within #waterfront blocks# shall be subject to all provisions of this Chapter, unless stated otherwise. #Developments# on other #zoning lots# within the #waterfront area# shall be subject to the regulations of this Chapter only when part of a #large-scale ~~#development#~~ development#, any portion of which is within a #waterfront block#, or when on #zoning lots# located in an area designated as part of a Waterfront Access Plan in accordance with Section 62-90 (WATERFRONT ACCESS PLANS). The provisions of this Chapter shall not be deemed to supersede or modify the regulations of any State or Federal agency having jurisdiction on affected properties.

* * *

62-132
Applicability of Article VII, Chapters 4, 8 & 9

The following special permits by the City Planning Commission shall not be applicable on #waterfront blocks#:

* * *

Section 74-53 (Accessory Group Parking Facilities for Uses in Large-Scale Residential Developments or Large-Scale Community Facility Developments or ~~General~~ Large-Scale General Developments) shall be applicable, except that finding (d), relating to roof parking, shall not apply. In lieu thereof, the provisions of Sections 62-411 (Accessory residential roof parking) and 62-421 (Accessory non-residential roof parking) shall apply.

* * *

Section 74-74 (~~General~~ Large-Scale General Development)

Section 78-00 (SPECIAL REGULATIONS APPLYING TO LARGE-SCALE RESIDENTIAL DEVELOPMENTS); and

Section 79-00 (SPECIAL REGULATIONS APPLYING TO LARGE-SCALE COMMUNITY FACILITY DEVELOPMENTS).

The #large-scale~~ #~~ development# provisions of Section 74-74 and Article VII, Chapters 8 and 9, shall be applicable, except that:

(a) In the event a #large-scale #development# consists of a portion within a #waterfront block# and a portion within a non-#waterfront block#, all #zoning lots# within the #development# shall be subject to the #bulk# regulations of Section 62-30 (SPECIAL BULK REGULATIONS).

(b) In the event a #large-scale #development# is located partially within and partially beyond the #waterfront area#, the landward boundary of the #waterfront area# shall be relocated so as to encompass all #zoning lots# within the #development# and such #development# shall be deemed to be located entirely within the #waterfront area#.

(c) Any height and setback modifications within a #waterfront block# shall be subject to an additional finding that such modifications would result in a site plan with visual and, where required, physical public access to the waterfront in a way that is superior to that which would be possible by strict adherence to the regulations of Section 62-341 (Developments on land and platforms).

For the purposes of modifying the height and setback regulations of Section 62-341, the term "periphery" shall include all portions of a #large-scale #development# within 100 feet of a peripheral #street# or #lot line#. The term "wholly within" shall therefore mean any area of a #large-scale #development# which is not within the area designated as periphery. #Large-scale residential developments# within R3, R4 or R5 Districts shall continue to be subject to the periphery provisions of Section 78-31 (Location of Buildings, Distribution of Bulk and Open Space and Modification of Height and Setbacks).

* * *

62-133
Applicability of the Quality Housing Program

(a) In R6, R7, R8, R9 and R10 Districts with a letter suffix, and in any C1 or C2 District mapped within such Districts, and in any other #Commercial District# with a letter suffix, any ~~#residential building# or any #residential# portion of a #mixed building developed# on a~~ #zoning lot# within a #waterfront block# with #buildings# containing #residences# shall comply with the applicable district #bulk# regulations as set forth in this Chapter, and shall also comply with the requirements of Article II, Chapter 8 (Quality Housing Program), except as modified in this Section.

(b) In R6, R7, R8, R9 and R10 Districts and in any C1 or C2 District mapped within such

Districts, and in #Commercial Districts# with R6 through R10 residential equivalents ~~in which #residential buildings# are governed by the #bulk# regulations of such #Residence Districts#~~, any ~~#residential~~ building# containing #residences# ~~or any #residential# portion of a #mixed building developed#~~ on a #zoning lot# on a #waterfront block# shall comply with the applicable district #bulk# regulations as set forth in this Chapter. The #bulk# regulations in Article II, Chapter 3, applicable to Quality Housing #developments# shall not apply. However, all other requirements of the Quality Housing Program set forth in Article II, Chapter 8 shall apply.

~~However, all other requirements of the Quality Housing Program set forth in Article II, Chapter 8 shall apply except that #d~~Developments# that provide a #shore public walkway#, in accordance with the requirements of Section 62-60 (DESIGN REQUIREMENTS FOR WATERFRONT PUBLIC ACCESS AREAS), shall be deemed to have met the requirements for recreation space specified in Section 28-30 (RECREATION SPACE AND PLANTING AREAS). Also, for the purposes of Section 28-33 (Planting Areas), the boundary of an #upland connection# located within a private drive shall be considered a #street line#.

62-134
Applicability of Article VII, Chapter 7

The provisions of Article VII, Chapter 7 (Special Provisions for Zoning Lots Divided by District Boundaries) shall be applicable on #waterfront blocks# as modified in the following section:

Section 77-28 (Height and Setback Regulations) shall be applicable, except that all references to #street# frontage shall be inapplicable. In lieu thereof, the percentage of the #zoning lot# in each district shall be used to determine the quantitative requirements. The provisions in such Section for ~~#developments# or #enlargements# built pursuant to the~~ - #Quality Housing ~~Program~~ buildings# shall be inapplicable. Furthermore, the height and setback regulations applicable to the district in which more than 50 percent of the #lot area# on the #zoning lot# is located, may apply to the entire #zoning lot# provided that the greatest distance from the mapped district boundary to any #lot line# of the #zoning lot# in the district in which less than 50 percent of the area is located does not exceed 25 feet. Such distance shall be measured perpendicular to the mapped district boundary.

* * *

62-242
Uses on new piers and platforms

#New piers# and #new platforms# shall be limited to WD #uses# or to the following WE #uses#: playgrounds or publicly accessible private parks. ~~Conversions~~ Changes of #use# ~~from these #uses#~~ to any other WE #use# are permitted only by special permit pursuant to Section 62-834 (Developments on piers or platforms).

* * *

62-32
Maximum Floor Area Ratio and Lot Coverage on Waterfront Blocks

62-321
Residential ~~development~~ uses in R3, R4 and R5 Districts

The maximum #floor area ratio# and #lot coverage# for #residential buildings# or #residential portions of #buildings# in R3, R4 and R5 Districts shall be in accordance with the applicable district regulations, except as provided in Section 62-323 (Non-profit residences for the elderly in

R3, R4, R5, R6 and R7 Districts).

62-322
Residential ~~development~~ uses in R1, R2, R6, R7, R8, R9 and R10 Districts

For #residential buildings# or #residential# portions of #buildings# in R1, R2, R6, R7, R8, R9 and R10 Districts, the regulations of Section 23-14 (Minimum Required Open Space, Open Space Ratio, Maximum Lot Coverage and Maximum Floor Area Ratio) through Section 23-15 (Maximum Floor Area Ratio in R10 Districts) shall not apply. In lieu thereof, the maximum #floor area ratio# and #lot coverage# ~~for any #building or other structure#~~ on a #zoning lot# ~~within a #waterfront block#~~ shall be as specified in the following table, except as provided for in Sections 62-323 (Non-profit residences for the elderly in R3, R4, R5, R6 and R7 Districts) and 62-35 (Special Bulk Regulations in Certain Areas Within Community District 1, Brooklyn):

MAXIMUM FLOOR AREA RATIO AND MAXIMUM LOT COVERAGE
FOR RESIDENTIAL BUILDINGS OR RESIDENTIAL PORTIONS OF BUILDINGS

District	Maximum #Floor Area Ratio#	Maximum #Lot Coverage# (in percent)
R1 R2	.50	35
R6B	2.00	60
R6	2.43	65
R6A R7B	3.00	65
R7-1 R7-2	3.44	65
R7A R8B	4.00	70
R7D	4.20	70
R7-3 R7X	5.00	70
R8 R8A R8X	6.02	70
R9 R9A	7.52	70
R9-1 R9X	9.00	70
R10	10.00*	70

---
* In R10 Districts, the #floor area ratio# ~~for any #building# on a #zoning lot# within a #waterfront block#~~ may be increased to a maximum of 12.0 pursuant to Section 23-90 (INCLUSIONARY HOUSING).

62-323
Non-profit residences for the elderly in R3, R4, R5, R6 and R7 Districts

In the districts indicated in the following table, the maximum #floor area ratio# and #lot coverage# for #non-profit residences for the elderly# on a #zoning lot# ~~within a #waterfront block#~~ shall be as specified:

MAXIMUM FLOOR AREA RATIO AND MAXIMUM LOT COVERAGE
FOR NON-PROFIT RESIDENCES FOR THE ELDERLY
IN R3, R4, R5, R6 AND R7 DISTRICTS

	Maximum	Maximum #Lot Coverage#

District	#Floor Area Ratio#	(in percent)
R3	.95	55
R4	1.29	55
R5	1.95	60
R5D R6B	2.00	60
R6 R6A R7B	3.90	65
R7 R7A R7D R7X	5.01	70

Where different maximum percentages of #lot coverage# apply to #residential# and #community facility uses#, the higher #lot coverage# shall be applied to any level containing both such #uses#. Furthermore, the maximum percent of #lot coverage# for #community facility uses# located below the level of #residential uses# need not be lower than the maximum percent of #lot coverage# permitted for such #residential uses#.

62-324
~~Non-residential buildings~~ Community facility and commercial uses in Residence Districts

In #Residence Districts#, for any #community facility building# or ~~any #building# used partly for~~ #community facility ~~use~~ # portion of a #building# on a #zoning lot# ~~within a #waterfront block#~~, the following regulations shall apply:

(a) The maximum #floor area ratio# shall be in accordance with the applicable district regulations, except that no #floor area# bonuses shall apply. In R7-3 and R9-1 Districts, the maximum #floor area ratio# shall be the maximum permitted for #residential buildings# pursuant to Section 62-322 (Residential ~~development~~ uses in R1, R2, R6, R7, R8, R9, and R10 Districts).

(b) The maximum percent of #lot coverage# specified in Section 24-11 (Maximum Floor Area Ratio and Percentage of Lot Coverage) shall not apply. In lieu thereof, the following #lot coverage# regulations shall apply to #community facility buildings# or to that portion of a #building# used for a #community facility use#:

MAXIMUM LOT COVERAGE FOR
COMMUNITY ~~FACILITY BUILDINGS~~ FACILITIES

District	Maximum #Lot Coverage# (in percent)
R1 R2 R3 R4 R5	60
R6B	65
R6 R6A R7B R7-1	70
R7-2 R7-3 R7A R7D R7X R8 R9A	75
R9 R9-1 R9X R10	80

Any portion of a #building# at any height up to but not exceeding 23 feet above the #base plane# may be excluded in determining the percent of #lot coverage# set forth in the preceding table.

In #Special Mixed Use Districts#, #lot coverage# requirements shall not apply to #community facility uses#.

In #Residence Districts#, when permitted, #commercial buildings# or #buildings# used partly for

#commercial use#, shall comply with the regulations for #residential buildings# as set forth in Sections 62-321 and 62-322.

The maximum #floor area ratio# permitted for a #community facility use# shall be in accordance with the applicable district regulations, and the maximum #floor area ratio# permitted for a #residential use# shall be as set forth in this Section 62-32, provided the total of all such #floor area ratios# does not exceed the greatest #floor area ratio# permitted for any such #use# on the #zoning lot#.

Where different maximum percentages of #lot coverage# apply to #residential# and #community facility uses#, the higher #lot coverage# shall be applied to any level containing both such #uses#. Furthermore, the maximum percent of #lot coverage# for #community facility uses# located below the level of #residential uses# need not be lower than the maximum percent of #lot coverage# permitted for such #residential uses#.

62-325
Buildings in Commercial Districts

In #Commercial Districts#, for any #commercial# or #community facility ~~building# or #building# used for both #commercial# and #community facility~~ uses# on a #zoning lot# ~~within a #waterfront block#~~, the maximum #floor area ratio# shall be in accordance with the applicable district regulations, except:

(a) no #floor area# bonuses shall be permitted; and

(b) the #floor area ratio# on a #zoning lot# shall not exceed 10.0.

For #residential buildings# and #residential# portions of #mixed buildings#, ~~The~~ the maximum #floor area ratio# and #lot coverage# applicable to #residential buildings# set forth in Sections 62-321 through 62-323 shall apply ~~to all #residential buildings# and #residential# portions of #mixed buildings#~~ as set forth for the applicable #residence district# and its #commercial district# equivalent in Section 35-23 (Residential bulk regulations in Other C1 or C2 Districts or in C3, C4, C5 or C6 Districts) .

62-326
Buildings in Manufacturing Districts

In #Manufacturing Districts#, for any ~~#building# on a~~ #zoning lot# ~~on a #waterfront block#~~, the maximum #floor area ratio# shall be in accordance with the applicable district regulations, except that no #floor area# bonuses shall be permitted.

62-327
Maximum floor area ratio for a mixed use building in ~~the~~ a Special Mixed Use District

The maximum #floor area ratio# for #zoning lots# containing a #mixed use building# in a #Special Mixed Use District# shall be in accordance with the provisions of Section 123-64 (Maximum Floor Area Ratio and Lot Coverage Requirements for Mixed Use Buildings).

62-33
Special Yard Regulations on Waterfront Blocks

#Yard# regulations for #zoning lots# ~~within #waterfront blocks#~~ shall be governed by the provisions of this Section. For #developments# containing WD #uses# or, in C8 or #Manufacturing Districts#, #developments# comprised predominantly of #uses# in Use Groups 16, 17 or 18, or for #developments# on #zoning lots# that are not #waterfront zoning lots#, #yards# shall be provided in accordance with the applicable district regulations. For all other #developments#, #yards# shall be provided in accordance with the provisions of Sections 62-331

(Front yards and side yards) and 62-332 (Rear yards and waterfront yards), except that no #yard# regulations shall be applicable on #piers# or #floating structures# nor may #piers# or #floating structures# be used to satisfy any #yard# requirements.

* * *

62-332
Rear yards and waterfront yards

* * *

No #building or other structure# shall be erected above the lowest level of a #waterfront yard#. Permitted obstructions in #waterfront yards# in all districts shall include ~~improvements within #waterfront public access areas# and~~ permitted obstructions as listed in Section 62-611 (Permitted obstructions) and Section 23-44 (Permitted Obstructions in Required Yards or Rear Yard Equivalents), except that enclosed #accessory# off-street parking spaces and walls exceeding four feet in height shall not be permitted.

* * *

62-341
Developments on land and platforms

All #developments# on portions of a #zoning lot# landward of the #shoreline# or on #platforms# shall be subject to the height and setback provisions of this Section. However, when the seaward view from all points along the shoreline of a #zoning lot# is entirely obstructed by existing elevated roads, bridges or similar structures which are less than 50 feet above mean high water and within 200 feet of the #shoreline#, #developments# shall be exempt from the requirements of this Section. Height and setback regulations for #developments# on #piers# and #floating structures# are set forth in Sections 62-342 and 62-343.

(a) For the purposes of applying the height and setback regulations of this Section, the following provisions shall apply:

* * *

(4) Permitted obstructions

The obstructions permitted pursuant to Sections 23-62, 24-51, 33-42, or 43-42 shall apply. In addition, the following obstructions shall be permitted:

(i) Within an #initial setback distance#, a dormer may exceed a maximum base height specified in Table A of this Section or penetrate a required setback area above a maximum base height specified in Table C of this Section provided that on any #street# frontage the aggregate width of all dormers at the maximum base height does not exceed 60 percent of the ~~length~~ width of the #street wall# of the highest #story# entirely below the maximum base height. At any level above the maximum base height, the ~~length~~ width of a #street wall# of a dormer shall be decreased by one percent for every foot that such level of dormer exceeds the maximum base height. (See Illustration of Dormer)

(ii) A penthouse portion of a #building# shall be permitted to exceed the applicable maximum #building# height, specified in Table A of this Section, by not more than 40 feet, only if the gross area of any #story# within such portion has a #lot coverage# of at least 50 percent and not more than 85 percent of the highest #story# that is located entirely below the maximum #building# height. Such reduced #lot coverage# shall be achieved by one or more setbacks on each face of the penthouse portion, where at least one setback on each face has a depth of at least four feet and a width that, individually or in the aggregate, is equal to at least ten percent of the width of such respective face. For the purposes of this paragraph, (a)(4)(ii), the penthouse portion shall have four faces, with each face being

the side of the rectangle within which the outermost walls of the highest #story# located entirely below the maximum #building# height have been inscribed. The required setbacks shall be measured from the outermost walls of the #building# facing each penthouse portion face. Required setback areas may overlap.

(b) Lower Density Districts

R1 R2 R3 R4 R5

C3 C4-1 C7 C8-1

M1-1

In the districts indicated, and in C1 and C2 Districts mapped within such #Residence Districts#, the ~~applicable~~ underlying district height and setback regulations are applicable or modified as follows:

(1) ~~#Residential buildings#~~ #Buildings# containing #residences#

(i) In R1 and R2 Districts, and in #Commercial Districts# governed by the #bulk# regulations of such #Residence Districts#, the underlying height and setback regulations ~~of Sections 23-60, 24-50 and 33-40~~ shall not apply. In lieu thereof, no ~~#residential# or~~ # ~~mixed~~ building# containing #residences#, except for a #predominantly community facility building#, shall exceed a height of 35 feet.

(ii) In R3, R4 and R5 Districts, and in #Commercial Districts# governed by the #bulk# regulations of such #Residence Districts#, the underlying height and setback regulations for ~~#residential# and # mixed~~ #buildings# containing #residences# shall apply except for #predominantly community facility buildings#. ~~;shall be in accordance with Section 23-60. However, the provisions of Section 35-61 relating to #mixed buildings# in C1 and C2 Districts mapped within R3 or R4 Districts, and C1 and C2 Districts mapped within R4, R4B or R4-1 Districts, shall also apply.~~

(2) #Predominantly community facility buildings#

The underlying height and setback regulations ~~of Section 24-50, 33-40 and 43-40~~ shall not apply. In lieu thereof, any portion of a #predominantly community facility building# that exceeds a height of 35 feet shall be set back at least 25 feet from a #front yard line# or #street line#, where applicable, and no portion of such #building# shall exceed a height of 60 feet. However, within a #large-scale community facility development#, for portions of a #building# that are located at least 100 feet from a #street line# and, on a #waterfront zoning lot#, 100 feet from a #waterfront yard#, the maximum height shall not exceed 100 feet.

(3) ~~#Commercial buildings#~~ #Buildings# containing #commercial uses#

The underlying height and setback regulations ~~of Section 33-40 and 43-40, and Section 23-60~~ for #commercial uses# ~~permitted in #Residence Districts# by special permit,~~ are modified as follows: no #building# containing #commercial uses# shall exceed a height of 30 feet, except for #mixed buildings# as set forth in paragraph (b)(1) of this Section or #predominantly community facility buildings# as set forth in paragraph (b)(2) of this Section.

(4) Other structures

All ~~other~~ structures other than #buildings# shall be limited to a height of 35 feet.

(c) Medium and High Density Non-Contextual Districts

R6 R7 R8 R9 R10

C1-6 C1-7 C1-8 C1-9 C2-6 C2-7 C2-8 C4-2 C4-3 C4-4 C4-5 C4-6 C4-7 C5 C6 C7 C8-2 C8-3 C8-4

M1-2 M1-3 M1-4 M1-5 M1-6 M2 M3

Except for medium and high density contextual districts listed in paragraph (d) of this Section, in the districts indicated, and in C1 and C2 Districts mapped within such #Residence Districts#, the underlying height and setback regulations ~~of Sections 23-60, 24-50, 33-40 and 43-40~~ shall not apply. In lieu thereof, the height and setback regulations set forth in this Section shall apply.

* * *

(5) Maximum ~~length~~ width of walls facing #shoreline#

The maximum ~~length~~ width of any #story# of a #building# that faces a #shoreline# and is entirely above the maximum base height specified in Table A of this Section shall not exceed 100 feet. Such ~~length~~ width shall be measured by inscribing within a rectangle the outermost walls at the level of each #story# entirely above the maximum base height. Any side of such rectangle from which perpendicular lines may be drawn to a #shoreline#, regardless of any intervening structures, properties or #streets#, shall not exceed 100 feet. (See illustration).

(6) Ground floor streetscape provisions

For the purposes of this Section, "ground floor level" shall mean the floor of a #building#, the level of which is located within five feet of the finished level of the adjacent sidewalk.

For #street walls# that are more than 50 feet in ~~length~~ width and within 50 feet of a #waterfront public access area# or #street#, the following rules shall apply:

(i) at least 50 percent of the ~~length~~ width of such #street walls# shall be occupied by #floor area# at the ground floor level; and

(ii) where such #street walls# do not contain windows with sill levels lower than four feet above the adjacent sidewalk for a continuous distance of at least 30 feet, such #street walls# shall be articulated with rustication or decorative grills, or screened with plant material, to a minimum height of four feet.

Parking garages that occupy the ground floor frontage along any #street# or private drive which is also an #upland connection# shall be screened in accordance with the planting requirements of paragraph (a)(7)(iii) of Section 62-655.

Table A
HEIGHT AND SETBACK FOR ALL BUILDINGS
IN MEDIUM AND HIGH DENSITY NON-CONTEXTUAL DISTRICTS*

	Maximum Height (in feet)	
District	Maximum Base Height	Maximum #Building or Other Structure# Height

R6 C1 or C2 mapped within R6 C7 C8-2 C8-3 M1-2 M1-4 M2-1 M2-3 M3	60	110
R7-1 R7-2 C1 or C2 mapped within R7-1 or R7-2 C1-6 C2-6 C4-2 C4-3 C4-4 C4-5	60	135
R7-3 C1 or C2 mapped within R7-3 C8-4 M1-3 M1-5 M2-2 M2-4	65	185
R8 C1 or C2 mapped within R8 C1-7 C6-1 C6-2	70	210
R9 C1 or C2 mapped within R9 C1-8 C2-7 C6-3	80	225
R9-1 C1 or C2 mapped within R9-1	90	280
R10 C1 or C2 mapped within R10 C1-9 C2-8 C4-6 C4-7 C5-1 C5-2 C5-3 C5-4 C5-5 C6-4 C6-5 C6-6 C6-7 C6-8 C6-9 M1-6	110	350

---

* For #predominantly community facility buildings#, the applicable regulations shall be determined from Table B of this Section.

* * *

(d) Medium and High Density Contextual Districts

R6A R6B R7A R7B R7D R7X R8A R8B R8X R9A R9X R10A

C1-6A C1-7A C1-8A C1-8X C1-9A C2-6A C2-7A C2-7X C2-8A C4-2A C4-3A C4-4A C4-5A C4-5D C4-5X C4-6A C4-7A C5-1A C5-2A C6-2A C6-3A C6-4A

In the districts indicated, and in C1 and C2 Districts mapped within such #Residence Districts#, the height and setback regulations of Sections 23-60, 24-50 and 35-24 shall not apply. In lieu thereof, the following regulations shall apply:

(1) Maximum building height

No #building or other structure# shall exceed the maximum #building# heights specified in Table C of this Section.

(2) Setback provisions

Except for dormers permitted in accordance with paragraph (a)(4)(i) of this Section, setbacks are required for all portions of #buildings or other structures# that exceed the maximum base heights specified in Table C of this Section. Such setbacks shall be provided in accordance with the following provisions:

(i) #Building# walls facing a #wide street# shall provide a setback at least ten

feet deep from such wall of the #building# at a height not lower than the minimum base height specified in Table C of this Section. #Building# walls facing a #narrow street# shall provide a setback at least 15 feet deep from such wall of the #building# at a height not lower than the minimum base height specified in Table C.

(ii) These setback provisions are optional for any #building# wall that is either located beyond 50 feet of a #street line# or oriented so that lines drawn perpendicular to it would intersect a #street line# at an angle of 65 degrees or less. In the case of an irregular #street line#, the line connecting the most extreme points of intersection shall be deemed to be the #street line#.

TABLE C
HEIGHT AND SETBACK FOR ALL BUILDINGS
IN MEDIUM AND HIGH DENSITY CONTEXTUAL DISTRICTS

District	Minimum Base Height	Maximum Base Height	Maximum #Building or Other Structure# Height

* * *

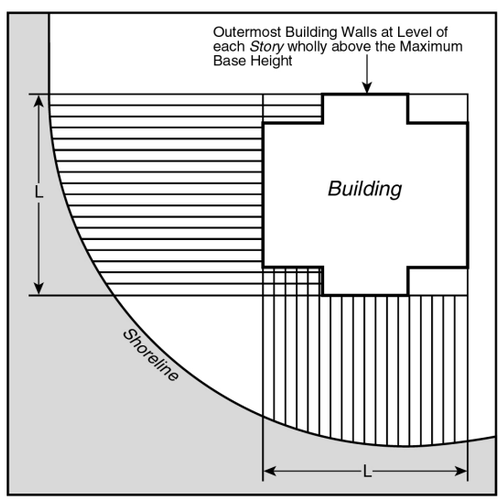

L - Maximum length of building wall (100 feet)

MAXIMUM ~~LENGTH~~ WIDTH OF BUILDING WALL FACING SHORELINE

* * *

62-342
Developments on piers

In all districts, the underlying height and setback regulations ~~of Sections 23-60, 24-50, 33-40 and 43-40~~ shall be inapplicable to #developments# on #piers#. In lieu thereof, the provisions of this Section shall apply.

The #base plane# of a #pier# shall be the elevation of the finished surface of the #pier#, below which no portion of a #building or other structure# penetrates, except for the supporting structure, plumbing or utility lines. In the event portions of a #pier# have different surface elevations, the surface elevation of at least 50 percent of the #pier# shall be used to establish the #base plane#.

The height of all #buildings or other structures# on #piers# shall be measured from the #base

plane#. For #buildings# with pitched roofs, maximum #building# height shall be measured to the midpoint of such pitched roof.

The obstructions permitted pursuant to Sections 23-62, 24-51, 33-42 or 43-42 shall apply. In addition, a dormer may penetrate a required setback area above a height of 30 feet provided the aggregate ~~length~~ width of dormers on any given building wall does not exceed 50 percent of the ~~length~~ width of such building wall.

(a) Height and setback regulations on #piers#

The height of a #building or other structure# on a #pier# shall not exceed 30 feet. However, where a setback at least 15 feet deep is provided, the maximum height of a #building or other structure# shall be 40 feet. Such required setback shall be provided at a minimum height of 25 feet and a maximum height of 30 feet, and may be reduced to ten feet in depth along any portion of the #building or other structure# fronting on an open area of the #pier# having a dimension of at least 40 feet measured perpendicular to such fronting portion.

(b) Building ~~length~~ width and spacing regulations on #piers#

The maximum length or width of any #building or other structure# on a #pier# shall be 200 feet. The provisions of Section 23-70 (MINIMUM REQUIRED DISTANCE BETWEEN TWO OR MORE BUILDINGS ON A SINGLE ZONING LOT) shall be inapplicable on #piers#. In lieu thereof, the minimum distance on a #pier# between any two #buildings or other structures# that do not #abut# ~~on a #pier#~~ shall be 100 feet. However, such limitations shall not apply to any #building or other structure#, no portion of which exceeds 30 feet in height.

Permitted obstructions above the #base plane# within such required open areas between #buildings or other structures# shall be limited to those allowed above the lowest level of a #visual corridor# pursuant to Section 62-513 (Permitted obstructions in visual corridors), except that free-standing #accessory buildings or other structures# shall also be permitted provided they do not exceed a height of 30 feet and a total area, in aggregate, of 900 square feet. A minimum spacing of 15 feet shall be provided between such #accessory buildings or other structures# and any other #building or other structure# on the #pier#.

(c) Modification of #pier bulk# regulations

Modification of the regulations of this Section involving the height and setback or ~~length~~ width and spacing of #buildings or other structures# on #piers# shall only be allowed by special permit of the City Planning Commission pursuant to Section 62-834 (Developments on piers and platforms), Section 74-711 (Landmark preservation in all districts) or Section 74-79 (Transfer of Development Rights from Landmark Sites).

62-343
Developments on floating structures

In all districts, the underlying height and setback regulations ~~of Sections 23-60, 24-50, 33-40 and 43-40~~ shall be inapplicable to #developments# on #floating structures#, except for WD #uses# in C8 and #Manufacturing Districts#. In lieu thereof, the provisions of this Section shall apply.

#Base plane# shall be inapplicable for #floating structures#. Height shall be measured from the water line of the #floating structure# to the highest point of the roof or uppermost open deck. However, the following obstructions are permitted to penetrate a height limit:

Chimneys, flues or stacks;

Flagpoles, aerials or masts;

Parapet walls or safety enclosures, not more than four feet high; and

Wire, chain link or other transparent fences.

#Developments# permitted as-of-right pursuant to Section 62-25 shall not exceed a height of 23 feet. #Developments# on #floating structures# pursuant to the special permit provisions of Section 62-833 shall not exceed the height limits set forth in Column A of the following table except for navigational vessels being ~~converted to~~ repurposed as #floating structures# in accordance with such special permit provisions. ~~Converted~~ Such repurposed vessels shall be subject to the height limits set forth in Column B of the following table.

HEIGHT LIMITS FOR FLOATING STRUCTURES

			Column A	Column B
#Residential District#	#Commercial District#	#Manu-facturing District#	Maximum Structure Height	Maximum Height of ~~Convert~~Repurposed Vessels

* * *

62-353
Special floor area, lot coverage and residential density distribution regulations

Within any parcel identified in Section 62-931 (Waterfront Access Plan BK1: Greenpoint-Williamsburg), and with respect to any such parcels that are adjacent to each other and that are under single-fee ownership and with respect to which each party having any interest therein is a party in interest (as defined in paragraph (e) of the definition of a #zoning lot# in Section 12-10) or with respect to which each party in interest (as defined in paragraph (f)(4) of the definition of a #zoning lot# in Section 12-10) has executed a declaration declaring that the properties are to be developed as a single parcel or has waived its right to execute such declaration, the total #lot coverage# permitted pursuant to Section 62-322, the total #floor area# permitted pursuant to Sections 62-351 or 62-352 and the #residential# density permitted pursuant to Section 23-22, may be located anywhere within such parcel or between such parcels without regard to #zoning lot lines# or district boundaries provided that such location of #floor area#, #lot coverage# or #residential# density complies with Sections 62-31 (Bulk Computations on Waterfront Lots) and 62-34 (Height and Setback Regulations on Waterfront Blocks), as modified by Section 62-354 (Special height and setback regulations).

62-354
Special height and setback regulations

Within Waterfront Access Plan BK-1, the provisions of Section 62-341 (Developments on land and platforms) are modified as follows:

* * *

(b) Paragraph (c)(2) (Maximum building height) shall not apply. In lieu thereof, the provisions of this paragraph, (b), shall apply:

(1) The maximum #building# height in an R6 District shall be 65 feet or six #stories#, whichever is less, within 100 feet of Commercial Street, West Street, Dupont Street, Franklin Street and Kent Avenue. Beyond 100 feet of such #streets# and any other portions of an R6 District, the maximum #building# height shall be 110 feet. In R8 Districts, the maximum #building# height shall be 190 feet, except that for #zoning lots developed# with multiple #buildings# or portions of #buildings# that exceed a height of 180 feet, not more than half of such #buildings# or portions of #buildings# may exceed a height of 190 feet, to a maximum #building# height

of 290 feet. Such maximum #building# heights of 110 feet, 190 feet and 290 feet may be exceeded by a penthouse portion of a #building#, pursuant to the provisions of paragraph (b)(3) of this Section.

(2) For #developments# that provide #affordable housing# pursuant to Section 62-352 (Inclusionary Housing), the increased #floor area# permitted for such #developments# may exceed the height limits of an R8 District set forth in paragraph (b) of this Section, provided that the maximum #building# height shall be 260 feet, except that for #zoning lots developed# with multiple #buildings# or portions of #buildings# that exceed a height of 200 feet, not more than half of such #buildings# or portions of #buildings# may exceed a height of 260 feet to a maximum #building# height of 360 feet. Such maximum #building# heights of 260 feet and 360 feet may be exceeded by a penthouse portion of a #building#, pursuant to the provisions of paragraph (b)(3) of this Section.

(3) The maximum #building# height may be exceeded by a penthouse portion of a #building# with a height of not more than 40 feet, only if the gross area of any #story# within such portion has a #lot coverage# of at least 50 percent and not more than 85 percent of the highest #story# that is located entirely below the applicable maximum #building# height. Such reduced #lot coverage# shall be achieved by one or more setbacks on each face of the penthouse portion, where at least one setback on each face has a depth of at least four feet and a width that, individually or in the aggregate, is equal to at least ten percent of the width of such respective face. For the purposes of paragraphs (b)(1) and (b)(2) of this Section, the penthouse portion shall have four faces, with each face being the side of the rectangle within which the outermost walls of the highest #story# located entirely below the maximum #building# height have been inscribed. The required setbacks shall be measured from the outermost walls of the #building# facing each penthouse portion face. Required setback areas may overlap.

* * *

(e) Paragraph (c)(6) (Maximum ~~length~~ width of walls facing #shoreline#) shall not apply. In lieu thereof, the outermost walls of each #story# located entirely above a height of 85 feet shall be inscribed within a rectangle. The maximum length of any side of such rectangle that is parallel or within 45 degrees of being parallel to Kent Avenue, West Street or Commercial Street, whichever is closest, shall not exceed 110 feet. The maximum length of any other side of such rectangle shall not exceed 170 feet, except that for #buildings# where at least 20 percent of the total #floor area# is comprised of #affordable housing# pursuant to Section 62-352, such maximum length of 170 feet shall apply above a height of 100 feet.

(f) Paragraph (c)(7) (Ground floor streetscape provisions) shall not apply. In lieu thereof, all off-street parking spaces located within 50 feet of a #street#, a #visual corridor# containing a #private road# and a #shore public walkway#, #upland connection# or #supplemental public access area# and which are located on a #story# that is above the #base plane# shall be within facilities that are located behind #commercial#, #community facility# or #residential# floor space so that no portion of such parking facility, other than entrances and exits, is visible from such #streets#, #visual corridors# or publicly accessible open spaces. Such floor space shall have a minimum depth of 25 feet. Up to five percent of such floor space may be used for mechanical equipment provided that no floor space used for mechanical equipment is located within 15 feet of the #street wall# of the #building# below a height of 15 feet above the #base plane#, and that no exhaust vents are located on the #street wall# of the #building# below a height of 15 feet above the #base plane#. The remainder of such floor space shall be used for #commercial#, #community facility# or #residential floor area#. Seventy percent of the surface area of the facade of a facility containing parking spaces, which are not otherwise required to be behind such #floor area#, shall be composed of the same materials as the facade of the #building# in which it is located.

(g) Any roof of a facility containing off-street parking spaces, not otherwise covered by a

#building#, which is larger than 400 square feet shall be landscaped. Up to five percent of such roof area may be used for mechanical equipment, provided that such mechanical equipment is screened from view by a fence which is at least 75 percent opaque or by at least three feet of dense planting. Up to 25 percent of such roof area may be accessible solely from an adjacent #dwelling unit# and the remaining roof area shall be accessible for the recreational use of the occupants of the #building# in which it is located. Hard surfaced areas shall not cover more than 60 percent of such roof area.

* * *

62-40
SPECIAL PARKING AND LOADING REGULATIONS

* * *

62-411
Accessory residential roof parking

On #waterfront blocks#, parking spaces #accessory# to #residential uses# may be located on the roof of a ~~non-#residential~~ #building#, ~~a non-#residential# portion of a #building# containing #residential use#~~ or ~~a~~ portion thereof, ~~of a #residential building#~~ that does not contain #dwelling units# or #rooming units#, provided that:

(a) the roof level is not higher than 23 feet above the #base plane#;

(b) the perimeter of the roof is enclosed by a four foot high parapet wall or other enclosure at least 50 percent opaque;

(c) trees are provided in accordance with Section 62-655 (Planting and trees) at the rate of one tree for each ten parking spaces for parking areas at grade;

(d) if on the roof of a portion of a ~~#residential building# or a non-#residential# portion of a~~ #building# containing #dwelling units# or #rooming units# ~~a #residential use#~~, the sill level of any #dwelling# or #rooming unit# windows opening onto such roof area is at least ten feet above the roof and no parking spaces or vehicular aisles are located within ten feet of a wall with #dwelling# or #rooming unit# windows; and

(e) no flood lighting shall be permitted and any lighting shall be directed away from any #residential# windows on the same or an adjacent #zoning lot#.

62-412
Accessory residential off-site parking

For #developments# on #waterfront blocks#, the provisions of Section 25-52 and 36-42 (Off-Site Spaces for Residences) shall be modified so as to permit all permitted or required #accessory# spaces to be located on a separate #zoning lot# provided that:

* * *

(f) in all districts, lighting shall be directed away from adjoining # ~~residential~~ buildings# containing #residences#. In no event shall flood lighting be permitted for off-site facilities in #Residence Districts#; and

* * *

62-421
Accessory non-residential roof parking

On #waterfront blocks#, parking spaces #accessory# to non-#residential uses# may be located on

the roof of a #non-residential building# ~~non-#residential building#~~ or a non-#residential# portion of a #building# containing #residential use# provided that they comply with Section 62-411 (Accessory residential roof parking) paragraphs (a) through (e).

* * *

62-45
Supplementary Regulations for All Parking Facilities

The applicable district regulations for #developments# ~~involving~~ with #accessory# or public parking facilities are further modified by this Section.

* * *

62-462
Passenger drop-off and pick-up areas for docking facilities

All #developments# ~~involving~~ providing new docking facilities serving ferries, sightseeing, excursion, sport fishing or passenger ocean vessels shall provide an area for the drop-off and pick-up of passengers by car, taxi, van and bus as shown in the following table. Such area shall be located on the #zoning lot# or on another #zoning lot# in the same or an adjoining #Commercial# or #Manufacturing District#, which is contiguous to the #zoning lot# occupied by the docking facility, or would be contiguous except for its separation by a #street# or #street# intersection.

* * *

62-50
GENERAL REQUIREMENTS FOR VISUAL CORRIDORS AND WATERFRONT PUBLIC ACCESS AREAS

All ~~#developments# on~~ #zoning lots developed# within #waterfront blocks# shall be subject to the provisions of this Section and Section 62-81 (Certifications by the Chairperson of the City Planning Commission).

* * *

62-51
Applicability of Visual Corridor Requirements

#Visual corridors# shall be provided for ~~#developments# on~~ #zoning lots developed# within #waterfront blocks# in accordance with the provisions of this Section.

However, the following shall be exempt from the provisions of this Section:

airports, heliports and seaplane bases

#developments# in C8 or #Manufacturing Districts# ~~comprising~~ comprised #predominantly# of #uses# in Use Groups 16, 17 or 18; except for docking facilities serving passenger ocean vessels or sightseeing, excursion or sport fishing vessels

#developments# in R1 or R2 Districts

#developments# ~~comprising~~ comprised of #single-# or #two-family residences# within #detached#, #semi-detached# or #zero lot line buildings# on #zoning lots# less than 10,000 square feet in any district

#extensions#

changes of #use# within existing #buildings or other structures#

In the event the #visual corridor# requirement imposed on the #zoning lot# exceeds 50 percent of

the #lot width# or there is no way to provide a #visual corridor# in compliance with Section 62-511, no #visual corridors# shall be required.

* * *

62-513
Permitted obstructions in visual corridors

~~The requirements of this Section shall apply to all #visual corridors#.~~

No #building or other structure# shall be erected within the width of a #visual corridor# above its lowest level, as established pursuant to Section 62-512 (Dimensions of visual corridors), except as provided in this Section. Permitted obstructions within #visual corridors# in all districts shall include: ~~be limited to those allowed for #waterfront yards# listed in Section 62-332, except that the following obstructions shall also be permitted:~~

(a) permitted obstructions listed in 62-611, provided that no shade trees shall be planted within 15 feet of the centerline of a #visual corridor#, except when provided within an open parking lot;

(b) permitted obstructions listed in 23-44 (Permitted Obstructions in Required Yards or Rear Yard Equivalents) as modified for #waterfront yards# in Section 62-332;

(c) boats, ships or other vessels, and #floating structures# permitted by paragraph (a) of Section 62-25;

~~(b)~~(d) any moving or parked vehicles; ~~or~~

(e) street furniture, including but not limited to, ~~benches, seats, kiosks,~~ carts and open display booths, ~~lighting fixtures, flagpoles, trash receptacles, drinking fountains and public telephones~~; and

~~(c) guardrails and fences provided they comply with the design standards of Section 62-651;~~

~~(d) planting areas, provided that no shade trees are planted within a 30 foot wide area, with 15 feet of such area located along each side of the centerline of the #visual corridor#, except that shade trees shall be a permitted obstruction when provided within an open surface parking lot; and~~

(~~e~~f) swimming pools, provided no portion projects more than 18 inches above the lowest level of a #visual corridor#.

62-52
Applicability of Waterfront Public Access Area Requirements

Waterfront public access shall be provided for all ~~#developments# on~~ #waterfront zoning lots# with a #lot area# of at least 10,000 square feet and a #shoreline# of at least 100 feet that are #developed# ~~,~~ and for all #developments# on #floating structures# in accordance with the provisions of the following Sections:

* * *

However, #zoning lots# with #developments# listed in paragraph (a) of this Section shall be exempted from #waterfront public access area# requirements; #zoning lots# with #developments# listed in paragraph (b) of this Section shall provide a #waterfront public access area# only as referenced therein.

(a) The following shall be exempted from #waterfront public access area# requirements:

* * *

#enlargements# which in the aggregate involve an increase in #floor area# (or for open

#uses#, #lot area#) of less than 50 percent of the amount existing on the #zoning lot# on October 25, 1993, and not more than 20,000 square feet;

* * *

(b) #Waterfront public access areas# required in conjunction with the following #developments# shall be subject to the minimum #waterfront public access area# set forth in the table in Section 62-57 and the requirements of Section 62-58 (Requirements for Water-Dependent Uses and Other Developments):

* * *

62-53
Requirements for Shore Public Walkways

(a) All ~~#developments# on~~ #waterfront zoning lots# meeting the criteria set forth in Section 62-52 (Applicability of Waterfront Public Access Area Requirements), or ~~for~~ #floating structures#, shall provide a #shore public walkway#, which shall comply with the following requirements:

(1) Such #shore public walkway# shall have a seaward edge contiguous with the seaward edge of the #waterfront yard# as established in Section 62-332 (Rear yards and waterfront yards) with a minimum width measured from such edge as set forth in paragraph (a)(2) of this Section, or for #floating structures#, as set forth in Section 62-55, unless relocation or modification of width is permitted pursuant to this Section;

(2) Such #shore public walkway# shall have a minimum width of 30 feet for #zoning lots developed# with #predominantly community facility# or #commercial uses# in R3, R4, R5 and C3 Districts, and such #uses# in C1 and C2 Districts mapped within R1 through R5 Districts. The minimum width for a #shore public walkway# provided for a #zoning lot developed# with any use# ~~#development#~~ in all other districts, other than R1 and R2 Districts, shall be 40 feet.

* * *

62-54
Requirements for Public Access on Piers

(a) All #developments# on #zoning lots# containing #piers# shall provide #waterfront public access areas# that meet the provisions of this Section.

#Waterfront public access areas# on #piers# shall consist of:

(1) an area along the seaward edge of the #pier# having a depth measured from such seaward edge equal to at least 25 percent of the overall length of the #pier#. Portions of #buildings# may project into the required #waterfront public access area#, provided that the aggregate width of all such projections at the level of any #story# does not exceed 50 percent of the aggregate width of the #building#. For the purposes of this paragraph, #abutting buildings# on a single #zoning lot# shall be considered a single #building#. The depth of the required #waterfront public access area# may be reduced by no more than 20 percent; such projections shall not be included in the computation of #waterfront public access area# provided on the #pier#. In no event shall the depth of the public access area be less than 15 feet;

* * *

62-58
Requirements for Water-Dependent Uses and Other Developments

~~#Developments# on~~ ~~#w~~Waterfront zoning lots# that are #developed# with #uses# listed in

paragraph (b) of Section 62-52 (Applicability of Waterfront Public Access Area Requirements) shall provide a minimum amount of #waterfront public access area# in accordance with the table in Section 62-57 (Requirements for Supplemental Public Access Areas).

* * *

For #developments# listed in paragraph (b)(1) of Section 62-52, on #zoning lots# containing a public access area established prior to October 25, 1993, by restrictive declaration, lease agreement, maintenance and operation agreement, or other agreement with a public entity, which public access area is required to be provided for the life of the #development# subject to such agreement, the requirements for the #waterfront public access area# shall have been met if the established public access area is substantially in compliance with the provisions of this Section.

* * *

62-60
DESIGN REQUIREMENTS FOR WATERFRONT PUBLIC ACCESS AREAS

#Waterfront public access areas# required pursuant to Section 62-52 (Applicability of Waterfront Public Access Area Requirements) shall comply with the provisions of this Section 62-60, inclusive.

* * *

62-611
Permitted obstructions

#Waterfront public access areas# shall be unobstructed from their lowest level to the sky except that the obstructions listed in this Section shall be permitted, as applicable. However, no obstructions of any kind shall be permitted within a required circulation path.

(a) In all areas

(1) Trees and other plant materials, including grasses, vines, shrubs and flowers, watering equipment, arbors, trellises, observation decks, retaining walls;

(2) Seating, litter receptacles, drinking fountains, other outdoor furniture;

(3) Fountains, reflecting pools, waterfalls, sculptures and other works of art, temporary exhibitions;

(4) Guardrails, bollards, gates and other protective barriers, in accordance with Section 62-651. ~~Open air cafes and kiosks, in accordance with the provisions of paragraph (e) of this Section;~~

(5) Lights and lighting stanchions, flag poles, ~~bollards and guardrails,~~ exercise and other recreational equipment.

(6) Kiosks and open air cafes

Where a kiosk is provided, it shall occupy an area no greater than 150 square feet, including roofed areas. A kiosk may be freestanding or attached on only one side to a building wall. Any area occupied by a kiosk shall be excluded from the definition of #floor area#, and may only be occupied by news or magazine stands, food stands, flower stands, bicycle rental stands, information booths or #uses accessory# to permitted WD #uses#, as permitted by the applicable district #use# regulations or as modified by Section 62-29.

Open air cafes shall be permanently unenclosed except that they may have a temporary fabric roof. No kitchen equipment shall be installed within an open air cafe. Kitchen equipment may be contained in a kiosk adjoining the open air cafe.

Notwithstanding the provisions of Section 32-41 (Enclosure Within Buildings), outdoor eating services or #uses# occupying kiosks may serve customers on a #waterfront public access area# through open windows.

(b) In screening buffers

(1) Paved entrances to #buildings# fronting upon a screening buffer, including awnings and canopies over such entrances, seating located within 42 inches of an adjacent paved area, bicycle racks within six feet of the sidewalk of an open accessible #street# or within ten feet of an #upland connection#;

(2) Service equipment necessary for maintenance of #waterfront public access areas# or the functioning of adjacent structures such as watering equipment, sheds for tool storage, electrical transformers or other mechanical or electrical service devices, provided all such equipment covers no more than 100 square feet in any location and has a maximum height of ten feet. Such obstructions shall be screened in accordance with Section 62-655 (Planting and trees);

(3) Exhaust vents located on building walls fronting on the screening buffer, only if the bottom of such vent is a minimum of ten feet above the adjacent ground level and projects no more than four inches from the building wall.

(c) Beyond 20 feet of the #shoreline#

Tot-lots, playgrounds, dog runs, public telephones, toilets, bicycle racks.

~~(d) Guardrails, gates and other protective barriers, in accordance with Section 62-651.~~

~~(e) Kiosks and open air cafes~~

~~Where a kiosk is provided, it shall occupy an area no greater than 150 square feet, including roofed areas. A kiosk may be freestanding or attached on only one side to a building wall. Any area occupied by a kiosk shall be excluded from the definition of #floor area#, and may only be occupied by news or magazine stands, food stands, flower stands, bicycle rental stands, information booths or #uses accessory# to permitted WD #uses#, as permitted by the applicable district #use# regulations or as modified by Section 62-29.~~

~~Open air cafes shall be permanently unenclosed except that they may have a temporary fabric roof. No kitchen equipment shall be installed within an open air cafe. Kitchen equipment may be contained in a kiosk adjoining the open air cafe.~~

~~Notwithstanding the provisions of Section 32-41 (Enclosure Within Buildings), outdoor eating services or #uses# occupying kiosks may serve customers on a #waterfront public access area# through open windows.~~

62-62
Design Requirements for Shore Public Walkways and Supplemental Public Access Areas

The design requirements of this Section shall apply to #shore public walkways# and #supplemental public access areas#, except as modified by Section 62-57 (Requirements for Supplemental Public Access Areas).

(a) Circulation and access

(1) In all districts, a ~~A~~ #shore public walkway# shall provide a circulation path with a minimum clear width of 12 feet, except that in R3, R4, R5, C1, C2 and C3 Districts, and in C1 or C2 Districts mapped within R1 through R5 Districts, ~~for #developments# comprised of #predominantly commercial# or #community~~

~~facility uses#,~~ the minimum clear width shall be 10 feet.

* * *

(c) Planting

(1) Planting areas

An area equal to at least 50 percent of the area of the #shore public walkway# and #supplemental public access area# shall be planted, except that in R3, R4, R5, C1, C2 and C3 Districts, and in C1 or C2 Districts mapped within R1 through R5 Districts, for ~~#developments# comprised of~~ #zoning lots# occupied by #predominantly commercial# or #community facility uses#, such area shall be equal to at least 40 percent.

In addition, the following conditions shall apply:

* * *

(2) Screening buffer

* * *

(iii) No screening buffer shall be required:

(a) adjacent to a private drive, a #street# or at the entrances to #buildings#; or

(b) for a #commercial# or #community facility use# where at least 70 percent of the area of the #building# façade, within a height of 10 feet, located within a distance of 15 feet from the sidewalk or #waterfront public access area#, is glazed with windows, transoms or glazed portions of doors. Not less than 50 percent of the entire area of such #commercial# or #community facility use# shall be glazed with transparent materials and up to 20 percent of such area may be glazed with translucent materials.

* * *

62-63
Design Requirements for Public Access on Piers and Floating Structures

62-631
Design requirements for public access on piers

The design requirements of this Section shall apply to #waterfront public access areas# on #piers#, pursuant to Section 62-54.

* * *

(b) Permitted obstructions

In addition to permitted obstructions pursuant to Section 62-611, #pier# public access areas may include one free-standing open or enclosed public pavilion, provided such structure does not exceed one #story#, is no taller than 30 feet and has an area no larger than 1,600 square feet. At least 50 percent of the perimeter wall area on all sides, up to a height of 15 feet, shall consist of clear or glazed materials which may include show windows, glazed transoms, glazed portions of doors or latticework. Such structures shall be exempt from #building# spacing requirements on #piers# provided they maintain a spacing of at least 12 feet from other #buildings# and from any water edge of the #pier#,

except that when a #pier# is 30 feet or less in width, a pavilion may abut one water edge.

* * *

62-653
Lighting

All waterfront public access areas shall provide lighting in accordance with the following requirements:

* * *

All lighting sources that illuminate a #waterfront public access area# and are mounted on or located within #buildings# adjacent to the #waterfront public access area# shall be shielded from direct view. In addition, all lighting within the #waterfront public access area# shall be shielded to minimize any adverse effect on surrounding #~~residential~~ buildings# containing #residences#.

* * *

62-70
MAINTENANCE AND OPERATION REQUIREMENTS FOR WATERFRONT PUBLIC ACCESS AREAS

62-71
Operational Requirements

(a) Hours of operation

All #waterfront public access areas# shall be open to the public at the times indicated in the table in this Section, except when required to be closed for repairs, and for no more than one day each year in order to preserve the private ownership of such area, as set forth in the maintenance and operation agreement required pursuant to Section 62-74.

HOURS OF OPERATION FOR WATERFRONT PUBLIC ACCESS AREAS

Districts	**April 15 to October 31**	**November 1 to April 14**
#Zoning lots# containing ~~P#~~predominantly~~#~~ community facility ~~#developments#~~ uses# in: R3 R4 R5 C1 or C2 in R3 thru R5 C3 C4-1 C8 M1 M2 M3	Dawn to dusk*	Dawn to dusk*
#Zoning lots# containing ~~P#~~predominantly~~#~~ commercial ~~#developments#~~ uses# in all districts	Dawn to dusk or business closing, whichever is later**	Dawn to dusk or business closing, whichever is later**
~~R6 R7 R8 R9 R10~~ All other #zoning lots# providing #waterfront public access areas#	6 A.M. to 10:00 P.M.	7 A.M. to 8:00 P.M.

* Dawn shall be defined as one half hour before sunrise, and dusk shall be defined as one half hour after sunset.

** #Waterfront public access areas# ~~in~~ on #zoning lots# containing predominantly #commercial ~~development~~ uses# shall not be required to be open to the public beyond ~~required hours of operation for #predominantly residential developments#~~ 10 P.M. from April 15th to October 31st and 8 P.M. from November 1st to April 14th.

* * *

62-81
Certifications by the Chairperson of the City Planning Commission

The provisions of Sections 62-811 and 62-812, relating to certifications for #waterfront public access areas#, #visual corridors# and #zoning lot# subdivisions, shall apply to all #zoning lots# within #waterfront blocks# and any other #blocks# included within a Waterfront Access Plan, except that the following shall not be subject to the provisions of Section 62-811:

airports, heliports and seaplane bases;

in any district, existing #zoning lots# of less than 10,000 square feet #developed# ~~developments# involving~~ #predominantly# with single-# or #two-family residences# within #detached#, #semi-detached# or #zero lot line buildings# ~~on existing #zoning lots# of less than 10,000 square feet in any district~~, provided such #zoning lots# are not included within an area subject to a Waterfront Access Plan pursuant to Section 62-90;

#zoning lots# in R1 and R2 Districts; and

#zoning lots# in C8 and #Manufacturing Districts#, ~~involving~~ containing #predominantly# Use Group 16, 17 or 18 #uses#, except for docking facilities serving passenger ocean vessels or sightseeing, excursion or sport fishing vessels.

62-811
Waterfront public access and visual corridors

No excavation or building permit shall be issued for any #development# on a #waterfront block#, or any other #block# included within a Waterfront Access Plan, until the Chairperson of the City Planning Commission certifies to the Department of Buildings or Department of Business Services, as applicable, that:

(a) there is no #waterfront public access area# or #visual corridor# requirement for the #zoning lot# containing such #development# due to the following:

(1) the #development# is exempt pursuant to Sections 62-52 (Applicability of Waterfront Public Access Area Requirements) or 62-51 (Applicability of Visual Corridor Requirements); or

(2) the #waterfront public access area# or #visual corridor# requirement has been waived pursuant to Section 62-90 (WATERFRONT ACCESS PLANS);

(b) a site plan has been submitted showing compliance with the provisions of Section 62-50 (GENERAL REQUIREMENTS FOR VISUAL CORRIDORS AND WATERFRONT PUBLIC ACCESS AREAS) and 62-60 (DESIGN REQUIREMENTS FOR WATERFRONT PUBLIC ACCESS AREAS);

(c) a site plan has been submitted showing compliance with the provisions of Section 62-90;

(d) for #developments# listed in Section 62-52, paragraph (b), on a #zoning lot# containing a public access area established prior to October 25, 1993, meeting the terms of Section 62-58 (Requirements for Water-Dependent Uses and Other Developments), by restrictive declaration, lease agreement, maintenance and operation agreement or other agreement with a public entity, which public access area is required to be provided for the life of the #development# subject to such agreement, a copy of such restrictive declaration or agreement and a site plan indicating the location, area and design of the required public access area and showing substantial compliance with the provisions of Section 62-58 have been submitted; or

(e) for the #development# of a park, a site plan and all other applicable data have been submitted showing compliance with the provisions of Section 62-59 (Special Regulations for Zoning Lots that Include Parks).

* * *

62-82
Authorizations by the City Planning Commission

62-821
Modification of requirements for ferries and sightseeing, excursion or sport fishing vessels

(a) In C1, C2, C3 and C7 Districts, the City Planning Commission may authorize modification of the #use# regulations of Section 32-10 (USES PERMITTED AS-OF-RIGHT) in order to allow docks for ferries with an operational passenger load greater than 150 passengers per half hour, provided the Commission finds that:

(1) such facility will not create serious pedestrian or vehicular traffic congestion that would adversely affect the surrounding area;

(2) the #streets# providing access to such facility will be adequate to handle the traffic generated thereby; and

(3) such #use# is so located as to draw a minimum of vehicular traffic to and through local #streets# in adjoining ~~#~~residential~~#~~ areas.

* * *

62-822
Modification of waterfront public access area and visual corridor requirements

* * *

(c) Authorization for phased #development# of #waterfront public access areas#

The City Planning Commission may authorize a phasing plan to implement #waterfront public access area# improvements on #zoning lots# undergoing partial development or #zoning lots# subdivided or reconfigured pursuant to Section 62-812.

In order to grant such authorization, the Commission shall find that:

(1) the amount of #waterfront public access area# #developed# in any phase is proportionate to the #lot area# being #developed# in such phase; or

(2) physical or programmatic constraints make it infeasible to provide the #waterfront public access area# on a proportional basis as the #zoning lot# is improved, and the maximum feasible amount of #waterfront public access area# is #developed# in each phase.

A phasing plan shall be submitted that sets forth the amount and location of #waterfront public access area# that will be provided at the time ~~of #development# of~~ each phase is #developed#.

* * *

62-823
Modification of use regulations in C3 Districts

In C3 Districts, the City Planning Commission may authorize modification of #use# regulations to allow a WE #use# not otherwise allowed as-of-right or by special permit. In conjunction with such authorization, the Commission may also allow the #sign# regulations of a C1 District to apply to the #zoning lot#.

As a condition to the granting of such authorization the Commission shall find:

(a) that such WE #use# is a #use# listed in Use Groups 5, 6, 7, 8, 9, 10, 12 or 13;

(b) that the #zoning lot# also includes a WD #use# that is either permitted in the district as-of-right or has been permitted by special permit;

(c) that such WE #use# will not create serious pedestrian or vehicular traffic congestion that would adversely affect surrounding ~~#residential#~~ residential #streets#;

* * *

62-832
Docks for ferries or water taxis in Residence Districts

In all #Residence Districts#, except R1 and R2 Districts, the City Planning Commission may permit docks for ferries or water taxis as listed in Use Group 6.

As a condition for granting a special permit, the Commission shall find that:

(a) such facility will not create serious pedestrian or vehicular traffic congestion that would adversely affect surrounding ~~#~~residential #streets#;

(b) such #use# is so located as to draw a minimum of vehicular traffic to and through local #streets# in the adjoining ~~#~~residential ~~#~~ area;

(c) there is appropriate landscaping along #lot lines# to enable such #use# to blend harmoniously with the adjoining ~~#~~residential~~#~~ area;

(d) #accessory# off-street parking spaces are provided in accordance with Section 62-43 (Parking Requirements for Commercial Docking Facilities) and the entrances and exits for such #accessory# parking facilities are so located as to not adversely affect #residential# properties fronting on the same #street#; and

(e) such #use# will not impair the character or the future use or development of the surrounding ~~#~~residential~~#~~ area.

* * *

62-836
Bulk modifications on waterfront blocks

In all districts, the City Planning Commission may permit modification of any applicable #yard#, #lot coverage#, height and setback, and distance between #buildings# regulations for a #development# on a #zoning lot# within a #waterfront block#, excluding any portion on a #pier# or #new platform#, provided the Commission finds that such modifications will not adversely

affect access to light and air on surrounding #waterfront public access areas#, #streets# and properties; and

(a) will result in a better site plan and a better relationship between the #zoning lot# and the adjacent #streets#, surrounding ~~#development#~~ neighborhood, adjacent open areas and #shoreline# than would be possible through strict adherence to the regulations; or

* * *

62-931
Waterfront Access Plan BK-1: Greenpoint-Williamsburg

* * *

(d) Special public access provisions by parcel

The provisions of Sections 62-52 (Applicability of Waterfront Public Access Area Requirements) and 62-60 (DESIGN REQUIREMENTS FOR WATERFRONT PUBLIC ACCESS AREAS) are modified at the following designated locations which are shown on Map BK-1b in paragraph (f) of this Section:

* * *

(2) Parcels 3 and 4

An #upland connection# shall be provided between Commercial Street and the #shore public walkway# within a flexible location along the #lot line# between Parcels 3 and 4. Whichever parcel is #developed# first shall provide an #upland connection# along the #lot line# between the two parcels. The remaining parcel may include the width of the #upland connection# ~~may be utilized by~~ ~~the developer of the remaining parcel~~ in the computation necessary to comply with the requirements of a #visual corridor# along the #lot line# between the two parcels, according to the provisions of paragraph (e)(1) of this Section. If both parcels are # #developed# concurrently, then the requirements may be divided equally along the #lot line# between the parcels.

* * *

(e) Special visual corridor provisions by parcel

The designated locations for #visual corridors# pursuant to this Plan are shown on Map BK-1c in paragraph (f) of this Section and shall be as follows:

(1) Parcels 3 and 4

A #visual corridor# shall be provided through Parcels 3 and 4 to the pierhead line within a flexible area along the common #lot line#.

Whichever parcel is #developed# later shall complete the required clearance to comply with the #visual corridor# requirements along the #upland connection# provided in accordance with the requirements of paragraph (d)(2)(i) of this Section. If the parcels are #developed# concurrently, then the requirements can be divided equally along the #lot line# between the parcels.

* * *

62-951
Waterfront Access Plan Q-1: Northern Hunters Point

* * *

(a) Special #waterfront yard# requirements

The #yard# regulations of Section 62-33 (Special Yard Regulations on Waterfront Blocks) shall be applicable. In addition, ~~for #developments# not required to provide~~ where a #waterfront yard# is not required pursuant to Section 62-33, #yards# meeting the dimensional requirements of Section 62-33 shall be provided in connection with any #development#, in accordance with the provisions of paragraph (f) of Section 62-912 (Elements of a Waterfront Access Plan).

(b) Area wide modifications

The following provisions shall apply to ~~#developments#~~ #zoning lots# required to provide a #waterfront public access area#, pursuant to Section 62-50 (GENERAL REQUIREMENTS FOR VISUAL CORRIDORS AND WATERFRONT PUBLIC ACCESS AREAS), inclusive:

* * *

(d) Special public access provisions by parcel

The provisions of Section 62-52 (Applicability of Waterfront Public Access Area Requirements) and Section 62-60 (DESIGN REQUIREMENTS FOR WATERFRONT PUBLIC ACCESS AREAS), inclusive, are modified at the following designated locations which are shown on Map Q-1b in paragraph (f) of this Section:

* * *

(2) Parcel 2

An #upland connection# shall be located between Vernon Boulevard and the #shore public walkway# within the flexible location zone shown on Map Q-1b in paragraph (f) of this Section, which is the westerly prolongation of Queens Plaza South, either:

(i) along the northerly tax lot line of Block 477, Lot 15, and its extension to Vernon Boulevard if such tax lot is #developed# as a #zoning lot# separate from Block 477, Lot 13; or

* * *

62-952
Waterfront Access Plan Q-2;
Downtown Flushing

* * *

(d) Special design standards

Required #waterfront public access areas# shall comply with Sections 62-50 and 62-60, except as modified in this Section.

* * *

(6) Any portion of an #upland connection# located within a #building# pursuant to this Plan shall comply with the following standards:

(i) the circulation path shall have a minimum width of 12 feet which shall adjoin and connect directly to the ~~building's~~ main lobby of the #building# via transparently-glazed openings with an aggregate width equal to or exceeding that of any other entrances to the lobby;

* * *

(iv) at least 50 percent of the area of any walls bounding an #upland connection# shall be glazed with a clear, untinted transparent material.

For the purposes of this requirement, the area of the bounding walls shall be measured from the floor to a height of 16 feet. In no case shall any bounding wall have a continuous ~~length~~ width without openings greater than 100 feet;

* * *

Article VI
Chapter 3
Special Regulations Applying to FRESH Food Stores

* * *

63-20
SPECIAL BULK AND PARKING REGULATIONS

63-21
Special Floor Area Regulations

63-211
For mixed buildings and zoning lots containing both residential and commercial or community facility uses in Commercial Districts ~~containing~~ with FRESH food stores

Where a #FRESH food store# is provided on a #zoning lot#, ~~T~~the provisions of Section 35-31 (Maximum Floor Area Ratio for Mixed Buildings) relating to the maximum permitted #floor area ratio# on a #zoning lot# for each permitted #use# shall apply as modified in this Section.~~, and the provisions relating to the total of all such #floor area ratios# shall be modified in accordance with the provisions of this Section~~.

Where all non-#residential uses# ~~in such #mixed building#~~ on such #zoning lot# have a permitted #floor area ratio# equal to or less than that permitted for a #residential use# and for #zoning lots# containing #Quality Housing buildings#, the total #floor area# permitted for such ~~#mixed building#~~ #zoning lot# may be increased by one square foot of #residential floor area# for each square foot of #FRESH food store floor area#, up to 20,000 square feet.

Where any non-#residential use# on such #zoning lot# has a permitted #floor area ratio# greater than that permitted for a #residential use#, the total #residential floor area# permitted for such #zoning lot# may be increased by one square foot for each square foot of #FRESH food store floor area#, up to 20,000 square feet, provided the total #floor area# of the #building# does not exceed the maximum permitted floor area for a non-#residential use#.

63-212
For mixed use buildings and zoning lots containing both residential and commercial or community facility uses in Special Mixed Use Districts ~~containing~~ with FRESH food stores

Where a #FRESH food store# is provided on a #zoning lot#, ~~T~~the provisions of Section 123-64 (Maximum Floor Area Ratio and Lot Coverage Requirements For Mixed Use Buildings) relating to the maximum permitted #floor area ratio# on a #zoning lot# for each permitted #use# shall apply as modified in this Section.~~, and the provisions relating to the total of all such #floor area ratios# shall be modified in accordance with the provisions of this Section.~~

Where all non-#residential uses# ~~in such #mixed building#~~ on such #zoning lot# have a permitted #floor area ratio# equal to or less than that permitted for a #residential use# and for #zoning lots# containing #Quality Housing buildings#, the total #floor area# permitted for such ~~#mixed building#~~ #zoning lot# may be increased by one square foot of #residential floor area# for each square foot of #FRESH food store floor area#, up to 20,000 square feet.

Where any non-#residential use# on such #zoning lot# has a permitted #floor area ratio# greater than that permitted for a #residential use#, the total #residential floor area# permitted for such #zoning lot# may be increased by one square foot for each square foot of #FRESH food store floor area#, up to 20,000 square feet, provided the total #floor area# of the #building# does not exceed the maximum permitted floor area for a non-#residential use#.

* * *

63-22
Authorization to Modify Maximum Building Height

For #~~mixed~~ buildings# ~~or #mixed use buildings# in #Special Mixed Use Districts#~~ containing a #FRESH food store#, the City Planning Commission may authorize modifications to Sections 35-24 (Special Street Wall Location and Height and Setback Regulations in Certain Districts) and 123-66 (Height and Setback Regulations) to allow the applicable maximum #building# height to be increased by up to 15 feet, provided that the first #story# occupied by a #FRESH food store# has a minimum finished floor to finished ceiling height of 14 feet, and provided that such finished ceiling height is at least 14 feet above the #base plane# or #curb level#, as applicable.

In order to grant such authorizations, the Commission shall find that:

(a) such modifications are necessary to accommodate a first #story# utilized as a #FRESH food store#;

(b) the proposed modifications shall not adversely affect the essential scale and character of the adjacent buildings and any adjacent historic resources; and

(c) the proposed modifications will not unduly obstruct access to light and air of adjacent properties.

The Commission may prescribe additional appropriate conditions and safeguards to minimize adverse effects on the character of the surrounding area.

* * *

Article VII
Chapter 2
Interpretations and Variances

72-00
POWERS OF THE BOARD OF STANDARDS AND APPEALS

72-01
General Provisions

The Board of Standards and Appeals (referred to hereinafter as the Board) shall have the power, pursuant to the provisions of the New York City Charter and of this Resolution, after public notice and hearing:

* * *

(g) to waive #bulk# regulations affected by unimproved #streets# where #development#, #enlargement# or alteration consists in part of construction within such #streets# and where such #development#, #enlargement# or alteration would be #non-complying# absent such waiver, provided the Board has granted a permit pursuant to Section 35 of the General City Law and has prescribed conditions which require the portion of the #development# or #enlargement# to be located within the unimproved #streets# to be compliant and conforming to the provisions of this Resolution. Such bulk waivers shall only be as necessary to address #non-compliance# resulting from the location of the #development# or #enlargement# within and outside the unimproved #streets#, and the ~~#development# as a whole~~ #zoning lot# shall comply to the maximum extent feasible with all applicable zoning regulations as if such unimproved #streets# were not mapped. Where such ~~#development# contains~~ #zoning lots# with #private roads# access fewer than 20 #dwelling units# ~~accessed by #private roads#~~, such #bulk# waivers may be granted by the Board only where the ~~#development# is~~ #zoning lots# are fully compliant with the regulations for #private roads# set forth in Article II, Chapter 6. However, for ~~#developments# with~~ #zoning lots# with #private roads# that access at least 20 #dwelling units# ~~accessed by #private roads#~~, or for ~~#developments# of~~ #zoning lots# with #private roads# that access fewer than 20 #dwelling units# ~~accessed by #private roads#~~ for which a modification or waiver of the requirements for #private roads#, pursuant to Section 26-26, is necessary, such #bulk# waivers shall be permitted only by authorization of the City Planning Commission pursuant to Section 26-27 (Waiver of Bulk Regulations for Developments with Unimproved Streets).

* * *

72-21
Findings Required for Variances

When in the course of enforcement of this Resolution, any officer from whom an appeal may be taken under the provisions of Section 72-11 (General Provisions) has applied or interpreted a provision of this Resolution, and there are practical difficulties or unnecessary hardship in the way of carrying out the strict letter of such provision, the Board of Standards and Appeals may, in accordance with the requirements set forth in this Section, vary or modify the provision so that the spirit of the law shall be observed, public safety secured, and substantial justice done.

Where it is alleged that there are practical difficulties or unnecessary hardship, the Board may grant a variance in the application of the provisions of this Resolution in the specific case, provided that as a condition to the grant of any such variance, the Board shall make each and every one of the following findings:

(a) that there are unique physical conditions, including irregularity, narrowness or shallowness of lot size or shape, or exceptional topographical or other physical conditions peculiar to and inherent in the particular #zoning lot#; and that, as a result of such unique physical conditions, practical difficulties or unnecessary hardship arise in complying

strictly with the #use# or #bulk# provisions of the Resolution; and that the alleged practical difficulties or unnecessary hardship are not due to circumstances created generally by the strict application of such provisions in the neighborhood or district in which the #zoning lot# is located;

(b) that because of such physical conditions there is no reasonable possibility that ~~the~~ a #development#, #enlargement#, #extension#, alteration or change of #use# on ~~of~~ the #zoning lot# in strict conformity with the provisions of this Resolution will bring a reasonable return, and that the grant of a variance is therefore necessary to enable the owner to realize a reasonable return from such #zoning lot#; this finding shall not be required for the granting of a variance to a non-profit organization;

(c) that the variance, if granted, will not alter the essential character of the neighborhood or district in which the #zoning lot# is located; will not substantially impair the appropriate use or development of adjacent property; and will not be detrimental to the public welfare;

(d) that the practical difficulties or unnecessary hardship claimed as a ground for a variance have not been created by the owner or by a predecessor in title; however where all other required findings are made, the purchase of a #zoning lot# subject to the restrictions sought to be varied shall not itself constitute a self-created hardship; and

(e) that within the intent and purposes of this Resolution the variance, if granted, is the minimum variance necessary to afford relief; and to this end, the Board may permit a lesser variance than that applied for.

It shall be a further requirement that the decision or determination of the Board shall set forth each required finding in each specific grant of a variance, and in each denial thereof which of the required findings have not been satisfied. In any such case, each finding shall be supported by substantial evidence or other data considered by the Board in reaching its decision, including the personal knowledge of or inspection by the members of the Board. Reports of other City agencies made as a result of inquiry by the Board shall not be considered hearsay, but may be considered by the Board as if the data therein contained were secured by personal inspection.

* * *

72-40
AMORTIZATION OF CERTAIN ADULT ESTABLISHMENTS AND SIGNS FOR ADULT ESTABLISHMENTS

* * *

This Section shall not apply to #commercial# establishments described in Section 72-41 (Continuation of Certain Adult Establishments).

72-41
Continuation of Certain Adult Establishments

Any #commercial# establishment in existence as of August 8, 2001 which: (i) subsequent to September 18, 1995 and prior to August 8, 2001 made financial expenditures so as to avoid becoming subject to the provisions of Section 32-01 or 42-01 (Special Provisions for Adult Establishments); and (ii) is defined as an #adult establishment# pursuant to the amendments to the definition of #adult establishment# in Section 12-10 adopted on October 31, 2001, shall terminate as an #adult establishment# within one year from October 31, 2001. Notwithstanding the foregoing, the Board of Standards and Appeals may permit such #adult establishment# to continue for a limited period beyond such one year period, provided that:

* * *

The provisions of Sections 52-77 and 72-40 shall not apply to #commercial# establishments subject to this Section.

Article VII
Chapter 3
Special Permits by the Board of Standards and Appeals

* * *

73-122
College or school student dormitories or fraternity or sorority student houses

The Board of Standards and Appeals may permit college or school student dormitories or fraternity or sorority student houses in R1 or R2 Districts, provided that the following findings are made:

(a) that such #use# does not exceed the maximum #floor area ratio# for #residential use ~~buildings~~# as set forth in Section 23-14 (Minimum Required Open Space, Open Space Ratio, Maximum Lot Coverage and Maximum Floor Area Ratio);

(b) that the amount of #open space# and its distribution on the #zoning lot# conform to standards appropriate to the character of the neighborhood;

(c) that, notwithstanding the provisions of Section 25-33 (Waiver of Requirements for Spaces below Minimum Number), at least one #accessory# off-street parking space is provided for each six beds; and

(d) that such #use# conforms to all the other applicable Off-Street Parking Regulations as set forth in Article II, Chapter 5.

The Board may prescribe appropriate conditions and safeguards to minimize adverse effects on the character of the surrounding area.

73-123
Non-commercial clubs

The Board of Standard and Appeals may permit non-commercial clubs, except swimming pool clubs or clubs with swimming pools located less than 500 feet from any #lot line#, in R1 or R2 Districts, provided that the following findings are made:

(a) that such #use# is so located as not to impair the character of the surrounding area or its future development as a neighborhood of #single-family residences#;

(b) that such #use# is so located as to draw a minimum of vehicular traffic to and through local #streets#;

(c) that such #use# complies with the minimum required #open space ratio# and maximum #floor area ratio# for #residential use ~~buildings~~# as set forth in Section 23-14 (Minimum Required Open Space, Open Space Ratio, Maximum Lot Coverage and Maximum Floor Area Ratio);

(d) that not more than half the #open space# provided is occupied by driveways, private streets, open #accessory# off-street parking spaces or active outdoor recreation facilities; and

(e) that the amount of #open space# provided and its distribution on the #zoning lot# conform to standards appropriate to the character of the neighborhood.

The Board may prescribe appropriate conditions and safeguards to minimize adverse effects on the character of the surrounding area, including requirements for shielding of floodlights, screening, or landscaping.

* * *

73-13
Open Uses in R1 or R2 Districts

In R1 or R2 Districts, the Board of Standard and Appeals may permit outdoor tennis courts or ice skating rinks, provided that the Board finds that such #use# is so located as not to impair the character of the surrounding area or its future development as a neighborhood of #single-family residences#.

The Board shall prescribe the following conditions:

(a) that such #use# and any #accessory# facilities affixed to the land are not located closer than 20 feet to any #lot line#; and

(b) that all lighting is directed away from nearby ~~#residential~~ zoning lots# containing #residences#.

The Board may prescribe additional appropriate conditions and safeguards to minimize adverse effects on the character of the surrounding area, including requirements for screening or for landscaping.

73-14
Public Service Establishments

In all #Residence Districts#, the Board of Standard and Appeals may permit electric or gas utility substations, limited in each case to a site of not more than 10,000 square feet, potable water pumping stations, or telephone exchanges or other communications equipment structures, provided that the following findings are made:

(a) that such #use# will serve the ~~#residential#~~ residential area within which it is proposed to be located; that there are serious difficulties in locating it in a district wherein it is permitted as of right and from which it could serve the ~~#residential#~~ residential area, which make it necessary to locate such #use# within a #Residence District#; and

(b) in the case of such electric or gas utility substations or potable water pumping stations, that the site for such #use# has a minimum #lot area# of 4,500 square feet.

The Board may prescribe appropriate conditions or safeguards to minimize adverse effects on the character of the surrounding area, including requirements that electric utility substations shall meet the performance standards for an M1 District; that such electric or gas utility substations or potable water pumping stations shall be surrounded with fences, barriers, or other safety devices; or that any such #use# shall be landscaped.

* * *

73-16
Public Transit, Railroad or Electric Utility Substations

In all #Residence# and #Commercial Districts#, and in M1 Districts in the #Special Downtown Jamaica District#, the Board of Standard and Appeals may permit electric utility substations (including transformers, switches, or auxiliary apparatus) or public transit or railroad electric substations, limited in each case to a site of not more than 40,000 square feet, and in the case of electric utility substations to a site of not less than 10,000 square feet, provided that the following findings are made:

(a) that such #use# will serve either the ~~#residential#~~ residential community within which it is proposed to be located or the ~~#residential#~~ residential community immediately adjacent, and that there are serious difficulties in locating such #use# in a nearby district

where it is permitted as-of-right;

(b) in the case of public transit or railroad electric substations, that the site for such #use# has a minimum frontage of 50 feet and a minimum #lot area# of 4,500 square feet;

(c) that the site for such #use# is so located in #Residence Districts# as to minimize the adverse effects on the integrity of existing and future development, or is so located in #Commercial Districts# as to minimize the interruption of the continuity of retail frontage;

(d) that the architectural and landscaping treatment of such #use# will blend harmoniously with the rest of the area; and

(e) that such #use# will conform to the performance standards applicable to M1 Districts.

The Board may prescribe appropriate conditions and safeguards to minimize adverse effects on the character of the surrounding area, including requirements for soundproofing, for the construction of fences, barriers, or other safety devices, for screening of apparatus, or for landscaping.

* * *

73-20
THEATERS

73-201
In C1 Districts

In C1 Districts, the Board of Standards and Appeals may permit theaters with a capacity of not more than 500 persons in a new or existing #building#. In C1-5, C1-6, C1-7, C1-8 and C1-9 Districts, motion picture theaters shall have a minimum of four square feet of waiting area within the #zoning lot# for each seat. The required waiting space shall be either in an enclosed lobby or open area that is covered or protected during inclement weather and shall not include space occupied by stairs or space within 10 feet of a refreshment stand or of an entrance to a public toilet. The Board shall not apply these requirements to any additional motion picture theater created by the subdivision of an existing motion picture theater.

The Board may prescribe appropriate conditions and safeguards to minimize adverse effects on the character of nearby ~~#residential#~~ residential areas.

73-202
In M1-5A or M1-5B Districts

In M1-5A or M1-5B Districts, the Board of Standards and Appeals may permit theaters for a term not to exceed five years provided that the following findings are made:

(a) that such #use# will not impair the character or the future use or development of the surrounding ~~#residential#~~ residential or mixed ~~#use#~~ use neighborhoods;

(b) that such #use# will not cause undue congestion in local #streets#; and

(c) that such #use# provides a waiting area of adequate size to prevent obstruction of #street# areas and other #uses# within the same or other #building#.

The Board shall prescribe appropriate controls to minimize adverse effects on the character of the surrounding area, including, but not limited to, location of entrances and operable windows; provision of sound-lock vestibules; specification of acoustical insulation; maximum size of establishment; number, kinds of amplification of musical instruments or voices; shielding of

flood lights; adequate screening; curb cuts, or parking.

* * *

73-22
Commercial Beaches

In C3 Districts, the Board of Standards and Appeals may permit commercial beaches for a term not to exceed five years, provided that the Department of Health has certified that the waters may be used for bathing purposes and do not violate safe and acceptable standards of water pollution, and provided further that the Board shall make the following findings:

(a) that such #use# is so located as to minimize interference with the movement and navigation of ships or boats;

(b) that no more than 20 percent of the shore line in any one mapped district is used for such #use#;

(c) that no #accessory# stands for the sale of food or drink shall be located within 100 feet of a #Residence District# boundary, and that the total #floor area# of all such stands shall not exceed 200 square feet; and

(d) that such #use# will not create such traffic congestion as to impair the ~~#residential#~~ residential character of the district. The Board shall refer the application to the Department of Traffic for a report as to whether the #use# will create such detrimental traffic congestion that it impairs such ~~#residential#~~ residential character.

The Board may prescribe appropriate conditions and safeguards to minimize adverse effects on the character of the surrounding area, or requirements for the shielding of floodlights or adequate screening.

73-23
Commercial Swimming Pools

In C3 Districts, the Board of Standards and Appeals may permit commercial swimming pools with a pool area of not more than 5,000 square feet for a term not to exceed five years, provided that the following findings are made:

(a) that such #use# is so located as not to impair the essential character or the future use or development of the nearby ~~#residential#~~ residential neighborhood; and

(b) that such pool is not located within 200 feet of the shore line.

The Board may prescribe appropriate conditions and safeguards to minimize adverse effects on the character of the surrounding area, including requirements for shielding of floodlights or adequate screening.

73-24
Eating or Drinking Places

73-241
In C1-1, C1-2, C1-3, C1-4, C2-1, C2-2, C2-3, C2-4, C3, C5, M1-5A or M1-5B Districts

In C1-1, C1-2, C1-3, C1-4, C2-1, C2-2, C2-3, C2-4, C3, C5, M1-5A or M1-5B Districts, the Board of Standards and Appeals may permit eating or drinking establishments, with entertainment but not dancing, with a capacity of 200 persons or less, for a term not to exceed five years, provided that the following findings are made:

(a) that such #use# will not impair the character or the future use or development of the surrounding ~~#residential#~~ residential or mixed ~~#use#~~ use neighborhood;

(b) that such #use# will not cause undue congestion in local #streets#;

(c) that in M1-5A and M1-5B Districts, eating and drinking places shall be limited to not more than 5,000 square feet of floor space;

(d) that in C1-1, C1-2, C1-3, C1-4, C2-1, C2-2, C2-3, C2-4, C5, M1-5A and M1-5B Districts such #use# shall take place in a #completely enclosed building#; and

(e) that the application is made jointly by the owner of ~~the~~ such #building# and the operators of such eating or drinking establishment.

The Board may modify the regulations relating to #signs# in C3 Districts to permit a maximum total #surface area# of 50 square feet of non-#illuminated# or #illuminated# non-#flashing signs#, provided that any #illuminated sign# shall not be less than 150 feet from the boundary of any #Residence District#. The Board shall prescribe appropriate controls to minimize adverse effects on the character of the surrounding area, including, but not limited to, location of entrances and operable windows, provision of sound-lock vestibules, specification of acoustical insulation, maximum size of establishment, kinds of amplification of musical instruments or voices, shielding of floodlights, adequate screening, curb cuts or parking.

73-242
In C3 Districts

In C3 Districts, the Board of Standards and Appeals may permit eating or drinking establishments (including those which provide outdoor table service or musical entertainment but not dancing, with a capacity of 200 persons or less, and including those which provide music for which there is no cover charge and no specified showtime) for a term not to exceed five years, provided that the following findings are made:

(a) that such #use# is so located as not to impair the essential character or the future use or development of the nearby ~~#residential#~~ residential neighborhood; and

(b) that such #use# will generate a minimum of vehicular traffic to and through local #streets# in ~~#residential#~~ residential areas.

The Board may modify the regulations relating to #signs# in C3 Districts to permit a maximum total #surface area# of 50 square feet of non-#illuminated# or #illuminated# non-#flashing signs#, provided that any #illuminated sign# shall not be less than 150 feet from the boundary of any #Residence District#.

The Board may prescribe appropriate conditions and safeguards to minimize adverse effects on the character of the surrounding area, including requirements for shielding of floodlights or adequate screening.

* * *

73-244
In C2, C3, C4*, C6-4, M1-5A, M1-5B, M1-5M and M1-6M Districts and the Special Tribeca Mixed Use District**

In C2, C3, C4*, C6-4**, M1-5A, M1-5B, M1-5M and M1-6M Districts and the #Special Tribeca Mixed Use District#, the Board of Standards and Appeals may permit eating or drinking establishments with entertainment and a capacity of more than 200 persons or establishments of any capacity with dancing, for a term not to exceed three years, provided that the following findings are made:

(a) that a minimum of four square feet of waiting area within the #zoning lot# shall be provided for each person permitted under the occupant capacity as determined by the New York City Building Code. The required waiting area shall be in an enclosed lobby and shall not include space occupied by stairs, corridors or restrooms. A plan shall be provided to the Board to ensure that the operation of the establishment will not result in the gathering of crowds or the formation of lines on the #street#;

(b) that the entrance to such #use# shall be a minimum of 100 feet from the nearest #Residence District# boundary;

(c) that such #use# will not cause undue vehicular or pedestrian congestion in local #streets#;

(d) that such #use# will not impair the character or the future use or development of the surrounding ~~#residential#~~ residential or mixed use neighborhoods;

(e) that such #use# will not cause the sound level in any affected conforming #residential use#, #joint living-work quarters for artists# or #loft dwelling# to exceed the limits set forth in any applicable provision of the New York City Noise Control Code; and

(f) that the application is made jointly by the owner of the #building# and the operators of such eating or drinking establishment.

The Board shall prescribe appropriate controls to minimize adverse effects on the character of the surrounding area, including, but not limited to, location of entrances and operable windows, provision of sound-lock vestibules, specification of acoustical insulation, maximum size of establishment, kinds of amplification of musical instruments or voices, shielding of flood lights, adequate screening, curb cuts or parking.

Any violation of the terms of a special permit may be grounds for its revocation.

* In C4 Districts where such #use# is within 100 feet from a #Residence District# boundary.

** In C6-4 Districts mapped within that portion of Community District 5, Manhattan, bounded by West 22nd Street, a line 100 feet west of Fifth Avenue, a line midway between West 16th Street and West 17th Street, and a line 100 feet east of Sixth Avenue.

73-25
Boatels

In C3 Districts, the Board of Standards and Appeals may permit #boatels# provided that the following findings are made:

(a) that such #use# is so located as not to impair the essential character or the future use or development of the nearby ~~#residential#~~ residential neighborhood; and

(b) that any restaurant permitted in connection with such #use# satisfies the conditions for issuance of special permits to eating or drinking places, as set forth in Section 73-24 (Eating or Drinking Places).

The Board may modify the regulations relating to #signs# in C3 Districts to permit a maximum total #surface area# of 50 square feet of non-#illuminated# or #illuminated# non-#flashing signs# on each of not more than three #street# or water frontages.

The Board may prescribe appropriate conditions or safeguards to minimize adverse effects on the character of the surrounding area, including requirements with respect to the location of #illuminated signs#, the shielding of floodlights or adequate screening.

73-26
Children's Amusement Parks

In C8 or M1 Districts, the Board of Standards and Appeals may permit children's amusement parks with an area of at least 10,000 square feet but not more than 75,000 square feet, for a term not to exceed five years, provided that the following findings are made:

(a) that such #use# is so located as not to impair the essential character or the future use or development of the surrounding area;

(b) that the principal vehicular access for such #use# is not located on a local #street# or on an arterial highway;

(c) that such #use# is not located within 400 feet of a #Residence District#;

(d) that vehicular entrances and exits for such #use# are provided separately, and that no entrance is located less than 50 feet from any exit; and

(e) that such #use# will not cause traffic congestion or other adverse effects which interfere with the appropriate use of land in the district or in any adjacent district, and that such #use# is so located as to minimize vehicular traffic to and through local #streets# in ~~#residential#~~ residential areas.

The Board may prescribe appropriate conditions and safeguards to minimize adverse effects on the character of the surrounding area, or requirements for shielding of floodlights, adequate screening, or surfacing all access roads or driveways.

73-27
Funeral Establishments

In C1 or C4 Districts, the Board of Standards and Appeals may permit funeral establishments provided that the following findings are made:

(a) that there are serious difficulties involved in locating within a district wherein such #use# is permitted as-of-right and from which it could serve the needs of its prospective clientele, which make it necessary to locate such #use# within a C1 or C4 District;

(b) that the site for such #use# is so located as to cause minimum interruption of the continuity of the frontage devoted to retail shopping #uses#. In determining whether the #use# will cause only minimum interruption of such retail frontage, the Board may make a favorable finding on the ground that there exists a substantial number of other incompatible #uses# interrupting such frontage within 200 feet on either side of the proposed site (not including land in #streets#); and

(c) that such #use# is so located as to draw a minimum of vehicular traffic to and through local #streets# in ~~#residential#~~ residential areas.

The Board may prescribe appropriate conditions and safeguards to minimize adverse effects on the character of the surrounding area.

* * *

73-36
Physical Culture or Health Establishments

* * *

(b) In C4-7, C5-2, C5-3, C5-4, C5-5, C6-4, C6-5, C6-6, C6-7, C6-8 or C6-9 Districts, the

Board may permit #physical culture or health establishments# located on the roof of a #commercial building# or the #commercial# portion of a #mixed building#, provided the following additional findings are made:

73-432
Reduction of parking spaces for places of assembly

In all #Commercial# and #Manufacturing Districts#, the Board of Standards and Appeals may permit a reduction in the number of #accessory# off-street parking spaces required under the provisions of Sections 25-31, 36-21 or 44-21 (General Provisions) for #uses# in parking requirement category D (Places of Assembly) whenever such #uses# are located ~~in the same #building# or~~ on the same #zoning lot# as other #uses#, proportionate to the extent that the Board finds:

(a) that the spaces #accessory# to such other #uses# will remain available for #use# by persons visiting the place of assembly during the entire period that such place of assembly remains in #use#; and

(b) that, in accordance with submitted schedules of the times of operation for all #uses# ~~within the #building# or~~ on the #zoning lot#, there will be no conflict in the #use# of such #accessory# off-street parking spaces, and that the provision of the full quota of required off-street parking spaces for places of assembly is therefore not needed. The permit to reduce such spaces shall be automatically revoked whenever there is a change in the nature of the conditions upon which such reduced requirements were based, including changes in #use#, availability of spaces or hours of operation.

* * *

73-451
For residences

The Board of Standards and Appeals may permit off-site spaces #accessory# to #residences# or to #non-profit hospital staff dwellings# to be located in any district except an R1 or R2 District, or at a greater distance from the #zoning lot# than the maximum distance specified in the applicable district regulations, provided that the following special findings are made:

(a) that the required #accessory# on-street parking spaces cannot reasonably be provided on the #zoning lot#, because of physical conditions including irregularity, narrowness, or shallowness of lot size or shape, exceptional topographical or other physical conditions;

(b) that within the maximum permitted radius for off-site parking or within a district other than a #Residence District#, there is substantial difficulty in obtaining a site of sufficient size to accommodate the required #accessory# off-street parking spaces because such sites are occupied by substantial improvements;

(c) that where such spaces are located at a greater distance from the #zoning lot# than the maximum distance permitted by the district regulations, such distance is not greater than as shown in the following table for the specified districts; and

Maximum Distance (in feet)	Districts
1,200	R3 R4 R5 R6 R7-1 R7B C1-1 C1-2 C1-3 C2-1 C2-2 C2-3 C3 C4-1 C4-2 C4-3
1,500	R7-2 R7A R7X R8 R9 R10 C1-4 C1-5 C1-6 C1-7 C1-8 C1-9 C2-4 C2-5 C2-

6 C2-7 C2-8 C4-4 C4-5 C4-6 C4-7 C5 C6

(d) that where such off-site spaces are located in a #Residence District#, they are so located as not to impair the essential character or the future use or development of the nearby ~~#residential#~~ residential neighborhood.

* * *

73-46
Waiver of Requirements for Conversions

In R6 or R7-1 Districts, in C1 or C2 Districts mapped within R6 or R7-1 Districts, or in C4-2 or C4-3 Districts, where the number of #accessory# off-street parking spaces required for additional #dwelling units# created by #conversions# of any kind exceeds the number of spaces which may be waived as of right under the provisions of Sections 25-262 (For conversions), 36-363 (For conversions in C1 or C2 Districts governed by surrounding Residence District bulk regulations) or 36-364 (For conversions in C4 Districts), the Board of Standards and Appeals may waive all or part of the required spaces, provided that the Board finds that there is neither a practical possibility of providing such spaces:

(a) on the same #zoning lot# because of insufficient #open space# and the prohibitive cost of structural changes necessary to provide the required spaces within the #building#; nor

(b) on a site located within 1,200 feet of the nearest boundary of the #zoning lot# because all sites within such radius are occupied by substantial improvements.

* * *

73-481
For hospitals and related facilities in Residence Districts

The Board of Standards and Appeals may permit #accessory group parking facilities# with more than 150 spaces for hospitals and related facilities in all #Residence Districts#, provided that the following findings are made:

(a) that such facility is so located as to draw a minimum of vehicular traffic to and through local #streets# in ~~#residential#~~ residential areas;

(b) that such facility has adequate reservoir space at the vehicular entrance to accommodate either 10 automobiles or five percent of the total parking spaces provided by the facility, whichever amount is greater, but in no event shall such reservoir space be required for more than 20 automobiles; and

(c) that the #streets# providing access to such #use# will be adequate to handle the traffic generated thereby.

The Board may prescribe appropriate conditions and safeguards to minimize adverse effects on the character of the surrounding area, including requirements for locations of entrances and exits or for shielding of floodlights.

* * *

73-53
Enlargements or Extensions of Certain Manufacturing or Related Uses

* * *

The Board may prescribe appropriate conditions and safeguards including, if appropriate,

limitations on hours of parking and delivery, requirements for off-street loading, and location of curb cuts to minimize adverse effects of the #enlargement#, #extension# or existing #uses# on the character of the surrounding area, and to protect #residential# or #commercial ~~#~~ zoning lots#.

* * *

73-62
Modification of Bulk Regulations for ~~Residential~~ Buildings Containing Residences

73-621
Enlargement, change of use, or extension within ~~or conversion of~~ buildings containing residential uses

For a complying or #non-complying building# existing on December 15, 1961, or in R2X, R3, R4 or R5 Districts on June 30, 1989, and containing #residential uses#, the Board of Standards and Appeals may permit an #enlargement#, a change of #use# ~~conversion~~ or (in the case of a #mixed building#) an #extension#, provided that such #enlargement#, change of #use# ~~conversion~~ or #extension# shall not create any new #non-compliance# or increase the amount or degree of any existing #non-compliance# except as provided in this Section.

In the districts and for the #buildings# for which an #open space ratio# is required, the #open space ratio# permitted under this Section shall not be less than 90 percent of the #open space ratio# required under the applicable #bulk# regulations set forth in Article II or III of this Resolution. In the districts and for the #buildings# to which a maximum #lot coverage# applies, the maximum #lot coverage# permitted under this Section shall not exceed 110 percent of the maximum #lot coverage# permitted under the applicable #bulk# regulations set forth in Article II or III of this Resolution. In all districts, the #floor area ratio# permitted under this Section shall not exceed the #floor area ratio# permitted under such regulations by more than 10 percent. In R2X, R3 or R4 Districts, the additional #floor area# permitted pursuant to this Section may be computed using a base #floor area ratio# including the #floor area# permitted under a sloping roof with a structural headroom between five and eight feet when such space is provided in the #building#.

73-622
Enlargements of single- and two-family detached and semi-detached residences

The Board of Standards and Appeals may permit an #enlargement# of ~~a~~ an existing #single-# or #two-family detached# or #semi-detached residence# within the following areas:

(a) Community Districts 10, 11 and 15, in the Borough of Brooklyn; and

(b) R2 Districts within the area bounded by Avenue I, Nostrand Avenue, Kings Highway, Avenue O and Ocean Avenue, Community District 14, in the Borough of Brooklyn.

Such #enlargement# may create a new #non-compliance#, or increase the amount or degree of any existing #non-compliance#, with the applicable #bulk# regulations for #lot coverage#, #open space#, #floor area#, #side yard#, #rear yard# or perimeter wall height regulations, provided that:

(1) any #enlargement# within a #side yard# shall be limited to an #enlargement# within an existing #non-complying side yard# and such #enlargement# shall not result in a decrease in the existing minimum width of open area between the #building# that is being #enlarged# and the #side lot line#;

(2) any #enlargement# that is located in a #rear yard# is not located within 20 feet of the #rear lot line#; and

(3) any #enlargement# resulting in a #non-complying# perimeter wall height shall only be permitted in R2X, R3, R4, R4A and R4-1 Districts, and only where the #enlarged building# is adjacent to a #single-# or #two-family detached# or #semi-detached residence# with an existing #non-complying# perimeter wall facing the #street#. The increased height of the perimeter wall of the #enlarged building# shall be equal to or less than the height of the adjacent building's # non-complying# perimeter wall facing the #street#, measured at the lowest point before a setback or pitched roof begins. Above such height, the setback regulations of Section 23-631, paragraph (b), shall continue to apply.

The Board shall find that the #enlarged building# will not alter the essential character of the neighborhood or district in which the #building# is located, nor impair the future ~~#use#~~ use or ~~#development#~~ development of the surrounding area. The Board may prescribe appropriate conditions and safeguards to minimize adverse effects on the character of the surrounding area.

73-63
Enlargement of Non-Residential Buildings

For a complying or #non-complying# ~~non-#residential~~ #non-residential building# existing on December 15, 1961, the Board of Standards and Appeals may permit an #enlargement#, provided that such #enlargement# shall not create any new #non-compliance# or increase the amount or degree of any existing #non-compliance# except as provided in this Section.

In all districts, the #floor area ratio# permitted under this Section shall not exceed the #floor area ratio# permitted under the applicable #bulk# regulations set forth in Article II, III or IV of this Resolution by more than 10 percent, or 10,000 square feet, whichever is less.

* * *

73-641
Integration of new buildings or enlargements with existing buildings

For any such ~~#development#~~ new #building# or #enlargement#, subject to the required findings set forth in this Section, the Board of Standards and Appeals may permit modifications of the applicable regulations in Sections 24-38, 33-28, or 43-28 (Special Provisions for Through Lots), or in Sections 24-51 to 24-55, inclusive, Sections 33-41 to 33-45, inclusive, or Sections 43-41 to 43-45, inclusive, relating to Height and Setback Regulations, or in Sections 24-61 to 24-65, inclusive, Section 33-51, or Section 43-51, relating to Court Regulations and Minimum Distance between Windows and Walls or Lot Lines, provided that on December 15, 1961 the applicant owned the #zoning lot# or any portion thereof, and continuously occupied and used one or more #buildings# located thereon for a specified #community facility use#, from December 15, 1961 until the time of application.
As a condition of granting such modification, the Board shall find:

(a) that such modification is required in order to enable such #use# to provide an essential service to the community;

(b) that without such modification there is no way to design and construct the new #buildings# or #enlargements# in satisfactory physical relationships to the existing #buildings# which are to remain upon the site, so as to produce an integrated development; and

(c) that such modification is the minimum modification necessary to permit the development of such integrated community facility, and thereby creates the least detriment to the character of the neighborhood and the use of nearby #zoning lots#.

73-642
Temporary failure to comply

In any district where such a specified #community facility use# is permitted, and on any #zoning lot# where one or more #buildings# occupied by such #use# exist on the date of application for the special permit, the Board of Standards and Appeals may permit ~~new~~ #development# or #enlargements# which, only because of the continued existence of such #buildings# on a temporary basis, fail to comply with one or more of the applicable district #bulk# regulations, provided that the Board finds that continued use of the existing #buildings# is essential as a service to the community until the new construction makes it possible to replace the facilities contained therein.

The Board shall prescribe as a condition of such permit that such existing #buildings# will be removed within a stated period of time not to exceed two years after completion of the ~~new~~ #development# or #enlargement#.

73-643
Community centers

In any such #development# or #enlargement# consisting of a community center serving primarily the residents of the #zoning lot#, the Board of Standards and Appeals may permit the density regulations set forth in Sections 24-20 (APPLICABILITY OF DENSITY REGULATIONS TO ZONING LOTS CONTAINING BOTH RESIDENTIAL AND COMMUNITY FACUILITY USES) or 35-40 (APPLICABILITY OF DENSITY REGULATIONS ~~TO MIXED BUILDINGS~~) to be modified, provided that the total number of #dwelling units# permitted by these Sections and all other applicable #bulk# regulations set forth in Articles II and III of this Resolution shall not be increased by more than 10 percent.

* * *

73-68
Height and Setback and Yard Modifications

In C5-5, C6-8 and C6-9 Districts, the Board of Standards and Appeals may permit modifications of the applicable regulations in Sections 33-26 to 33-30, inclusive, relating to Rear Yard Regulations or in Sections 33-41 to 33-45, inclusive, relating to Height and Setback Regulations.

The Board may grant such modifications upon consideration that the applicable height and setback or #rear yard# regulations cannot be complied with by some method feasible for the applicant to pursue because of size or irregular shape of the lot, size or irregular shape of the #block#, and width of #streets#. The Board shall also consider the characteristics of surrounding ~~#development#~~ development.

The Board shall require, where appropriate, sufficient safeguards to insure the free flow of pedestrian and vehicular traffic in the general area. The Board may prescribe additional appropriate conditions and safeguards to enhance the character of the surrounding area.

* * *

Article VII
Chapter 4
Special Permits by the City Planning Commission

* * *

74-40
USE PERMITS

74-41
Arenas, Auditoriums, Stadiums or Trade Expositions

In C4, C6, C7 or C8 Districts or any #Manufacturing District#, the City Planning Commission may permit arenas, auditoriums or stadiums with a capacity in excess of 2,500 seats, or trade expositions with a rated capacity in excess of 2,500 persons, provided that the following findings are made:

(a) that the principal vehicular access for such #use# is not located on a local #street# but is located on an arterial highway, a major #street# or a secondary #street# within one-quarter mile of an arterial highway or major #street#;

(b) that such #use# is so located as to draw a minimum of vehicular traffic to and through local #streets# in nearby ~~#residential#~~ residential areas;

* * *

74-42
Drive-in Theaters

In C7 or C8 Districts or any #Manufacturing District#, the City Planning Commission may permit drive-in theaters, limited to a maximum capacity of 500 automobiles, provided that the following findings are made:

(a) that the principal vehicular access for such #use# is not located on a local #street# or an arterial highway but is located on a major or secondary #street# within one-quarter mile of an arterial highway;

(b) that such #use# is so located as to draw a minimum of vehicular traffic to and through local #streets# in nearby ~~#residential#~~ residential areas;

* * *

74-43
Racetracks

In C8 Districts or any #Manufacturing District#, the City Planning Commission may permit racetracks, provided that the following findings are made:

(a) that the principal vehicular access for such #use# is not located on a local #street# but is located either on an arterial highway, a major #street#, or a secondary #street# within one-quarter mile of an arterial highway or major #street#;

(b) that such #use# is so located as to draw a minimum of vehicular traffic to and through local #streets# in nearby ~~#residential#~~ residential areas;

* * *

74-44
Children's Amusement Parks

In C8 or M1 Districts, the City Planning Commission may permit children's amusement parks with an area of at least 75,000 square feet, but not more than 10 acres, provided that the following findings are made:

* * *

(c) that such #use# will not produce traffic congestion or other adverse effects which interfere with the appropriate use of land in the district or in any adjacent district, and that such #use# is so located as to draw a minimum of vehicular traffic to and through local #streets# in nearby ~~#residential#~~ residential areas;

* * *

74-45
Swimming Pool Clubs or Certain Non-Commercial Clubs

In all #Residence Districts#, the City Planning Commission may permit a non-commercial outdoor swimming pool club, or any non-commercial club with an outdoor swimming pool located less than 500 feet from any #lot line#, provided that the following findings are made:

(a) that such #use# is so located as not to impair the essential character or future use or development of the nearby ~~#residential#~~ residential neighborhood;

* * *

(d) that in R1, R2, R3 or R4 Districts, the pool or any #accessory# facilities affixed to the land are not located closer than 100 feet or, in the case of an #accessory# outdoor tennis court, such tennis court shall not be closer than 20 feet, to any #side# or #rear lot line# coincident with a #side# or #rear lot line# of an adjoining #zoning lot# in a #~~Residential~~ Residence District#, and not located closer than 50 feet to any #street line#, and that any planned temporary enclosure such as an air-supported structure be indicated on the plans submitted with this application, and in no event shall such a structure be located closer than 50 feet from any #street# or #lot line#, if such a structure is planned subsequent to the approval of the special permit, then an amended application subject to the same approvals of this Section shall be submitted; and

* * *

74-49
Residential Use in C4-1 Districts in Staten Island

In the Borough of Staten Island, in C4-1 Districts that occupy at least four acres within a #block# and in other C4-1 Districts for #zoning lots# that, on December 21, 2005, were greater than 20,000 square feet, the City Planning Commission may permit #residences#, provided such #residences# comply with the #bulk# regulations for R5 Districts as set forth in Article II, Chapter 3, or~~, for #mixed buildings#,~~ Article III, Chapter 5, as applicable.

* * *

74-50
OFF-STREET PARKING ESTABLISHMENTS

74-51
Public Parking Garages or Public Parking Lots outside High Density Central Areas

74-511
In C1 Districts

In C1-1, C1-2, C1-3 or C1-4 Districts, the City Planning Commission may permit #public

parking garages# or #public parking lots# with a capacity of not more than 100 spaces, provided that the regulations set forth in Sections 36-53 (Location of Access to the Street), 36-55 (Surfacing) and 36-56 (Screening) are met. The Commission may permit some of such spaces to be located on the roof of such #public parking garage#, or may permit floor space on one or more #stories# and up to a height of 23 feet above #curb level#, to be exempted from the definition of #floor area# as set forth in Section 12-10 (DEFINITIONS). As a condition of permitting such #use#, the Commission shall make the following findings:

(a) that such #use# is so located as to draw a minimum of vehicular traffic to and through local #streets# in nearby ~~#residential#~~ residential areas;

* * *

74-512
In other Districts

In C2-1, C2-2, C2-3, C2-4, C4-1, C4-2, C4-3, C4-4, C4-5D, C7, C8-1, C8-2, C8-3, M1-1, M1-2, M1-3, M2-1, M2-2 or M3-1 Districts, the City Planning Commission may permit #public parking garages# or #public parking lots# with more than 150 spaces, provided that the applicable regulations set forth in Sections 36-53 or 44-43 (Location of Access to the Street), Sections 36-55 or 44-44 (Surfacing) and Sections 36-56 or 44-45 (Screening) are met. The Commission may permit some of such spaces to be located on the roof of such #public parking garage#, or may permit floor space on one or more #stories# and up to a height of 23 feet above #curb level# to be exempted from the definition of #floor area# as set forth in Section 12-10 (DEFINITIONS). As a condition of permitting such #use#, the Commission shall make the following findings:

(a) that the principal vehicular access for such #use# is located on an arterial highway, a major #street# or a secondary #street# within one-quarter mile of an arterial highway or major #street#, except that in C5 or C6 Districts such access may be located on a local #street#;

(b) that such #use# is so located as to draw a minimum of vehicular traffic to and through local #streets# in nearby ~~#residential#~~ residential areas;

* * *

74-513
In C7 Districts

In C7 Districts, the City Planning Commission may permit #public parking garages# or #public parking lots# of any capacity, provided that the applicable regulations set forth in Sections 36-53 (Location of Access to the Street), 36-55 (Surfacing) and 36-56 (Screening) are met. The Commission may permit some of such spaces to be located on the roof of such #public parking garage#, or may permit floor space on one or more #stories# and up to a height of 23 feet above #curb level#, to be exempted from the definition of #floor area# as set forth in Section 12-10 (DEFINITIONS). As a condition of permitting such #use#, the Commission shall make the following findings:

(a) that the principal vehicular access for such #use# is located on an arterial highway, or major #street#, or a secondary #street# within one-quarter mile or an arterial highway or major #street#;

(b) that such #use# is so located as to draw a minimum of vehicular traffic to and through local #streets# in nearby ~~#residential#~~ residential areas;

* * *

74-52
Parking Garages or Public Parking Lots in High Density Central Areas

In C1-5, C1-6, C1-7, C1-8 or C1-9 Districts, the City Planning Commission may permit #public parking garages# or #public parking lots# with a capacity of not more than 100 spaces, and in

C2-5, C2-6, C2-7, C2-8, C4-5, C4-5A, C4-5X, C4-6, C4-7, C6, C8-4, M1-4, M1-5, M1-6, M2-3, M2-4 or M3-2 Districts, the Commission may permit #public parking garages# with any capacity or #public parking lots# with more than 150 spaces, and in C5 and C6-1A Districts, the Commission may permit #public parking garages# or #public parking lots# with any capacity, provided that the applicable regulations set forth in Sections 36-53 or 44-43 (Location of Access to the Street), Sections 36-55 or 44-44 (Surfacing) and Sections 36-56 or 44-45 (Screening) are met.

The Commission may permit some of such spaces to be located on the roof of such #public parking garage#, or may permit floor space on one or more #stories# and up to a height of 23 feet above #curb level#, to be exempted from the definition of #floor area# as set forth in Section 12-10 (DEFINITIONS). As a condition of permitting such #use#, the Commission shall make the following findings:

(a) that such #use# will not be incompatible with, or adversely affect the growth and development of, #uses# comprising vital and essential functions in the general area within which such #use# is to be located;

(b) that such #use# will not create or contribute to serious traffic congestion and will not unduly inhibit surface traffic and pedestrian flow;

(c) that such #use# is so located as to draw a minimum of vehicular traffic to and through local #streets# in nearby ~~#residential#~~ residential areas;

* * *

74-53
Accessory Group Parking Facilities for Uses in Large-Scale Residential Developments or Large-Scale Community Facility Developments or ~~General~~ Large-Scale General Developments

The City Planning Commission may permit #group parking facilities accessory# to #uses# in #large-scale residential developments# or #large-scale community facility developments# or ~~#general~~ large-scale general developments# with more than the prescribed maximum of Sections 25-12, 36-12 and 44-12 (Maximum Size of Accessory Group Parking Facilities) or may permit modifications of the applicable provisions of Sections 25-11, 36-11 and 44-11 (General Provisions) so as to permit off-street parking spaces #accessory# to such #uses# to be located on the roof of a #building#.

As a condition of permitting such exceptions or modifications, the Commission shall make the following findings:

(a) that such #use# is so located as to draw a minimum of vehicular traffic to and through local #streets# in ~~#residential#~~ residential areas;

* * *

74-55
Off-street Parking Requirement for Youth-oriented or Senior Citizen-oriented Community Centers and Non-profit Neighborhood Settlement Houses

In C1-2 and C2-2 Districts, for youth-oriented or senior citizen-oriented community centers and ~~such~~ non-profit neighborhood settlement houses, the City Planning Commission may permit modifications of the parking requirement of Section 36-21, provided the following findings are made:

(a) that, because of site limitations, such a reduction is necessary for the proper design and operation of such community centers and non-profit neighborhood settlement houses; and

(b) that available off-site parking and mass transit facilities are adequate to satisfy the additional parking demand generated by such #community facility#.

* * *

74-56
Open Automobile Rental Establishments

In C2 Districts within a one-half mile radius of the main entrance of La Guardia Airport, located at the intersection of Grand Central Parkway and the 94th Street Bridge, the City Planning Commission may permit open automobile rental establishments on #zoning lots# having a frontage of at least 200 feet on Ditmars Boulevard, provided that the following findings are made:

(a) that such open #use# will not be incompatible with, or adversely affect the growth and ~~#development#~~ development, of appropriate #uses# in the general area within which such open #use# is to be located;

(b) that such open #use# will not create or contribute to serious traffic congestion and will not unduly inhibit surface traffic and pedestrian flow;

(c) that such open #use# is so located as to draw a minimum of vehicular traffic to and through local #streets# in nearby ~~#residential#~~ residential areas;

* * *

74-62
Railroad Passenger Stations

(a) Except as provided in paragraph (b), the City Planning Commission may permit the construction of railroad passenger stations in all districts, provided that the following findings are made:

(1) that the principal access for such #use# is not located on a local #street#;

(2) that such #use# is so located as to draw a minimum of vehicular traffic to and through local #streets# in ~~#residential#~~ residential areas; and

* * *

(b) In Community Districts 4 and 5 in the Borough of Manhattan, the City Planning Commission may permit the construction of railroad passenger stations and ventilation facilities or other facilities or services used or required in connection with such railroad passenger station or in connection with an underground railroad right-of-way that provides access to such railroad passenger station, and may permit waivers of applicable #bulk# regulations, other than #floor area ratio#, in connection with such ventilation facilities, or other facilities or services, provided that the following findings are made:

(1) that the principal access for such railroad passenger station is not located on a local #street#;

(2) that such railroad passenger station is so located as to draw a minimum of vehicular traffic to and through local #streets# in ~~#residential#~~ residential areas;

* * *

74-63
Bus Stations

74-631
New bus stations with 10 or more berths

In C4, C6 or #Manufacturing Districts#, the City Planning Commission may permit the

construction of a bus station with 10 or more berths for buses on a site of not less than 20,000 square feet, provided that the following findings are made:

(a) that the use of the premises as a bus station will not create serious traffic congestion, will not be detrimental to public health or general welfare, and is consistent with the master plan of the city;

(b) that the principal access for such #use# is not located on a local #street# but is located either on an arterial highway, a major #street# or a secondary #street# within one-quarter mile of an arterial highway or major #street#;

(c) that such #use# is not located within 200 feet of a #Residence District#, or is otherwise separated from nearby ~~#residential#~~ residential areas by topographical or physical conditions of the land;

* * *

74-634
Subway station improvements in Downtown Brooklyn and in commercial zones of 10 FAR and above in Manhattan

The City Planning Commission may grant, by special permit, a #floor area# bonus not to exceed 20 percent of the basic maximum #floor area ratio# permitted by the underlying district regulations, and may waive or modify the provisions of Article III, Chapter 7 (Special Regulations), and the #street wall# continuity provisions of Sections 81-43 (Street Wall Continuity Along Designated Streets), 91-31 (Street Wall Regulations)or 101-47 (Special Street Wall Location Regulations) for #developments# or #enlargements# located on #zoning lots# where major improvements to adjacent subway stations are provided in accordance with the provisions of this Section. For the purposes of this Section, "adjacent" shall mean that upon completion of the improvement, the #zoning lot# will physically adjoin a subway station mezzanine, platform, concourse or connecting passageway. Subway stations where such improvements may be constructed are those stations located within the #Special Midtown District# as listed in Section 81-292 (Subway station improvements), the #Special Lower Manhattan District# as listed in Section 91-43 (Special Permit for Subway Station Improvements), the #Special Downtown Brooklyn District# as listed in Section 101-211 (Special permit for subway station improvements), the #Special Union Square District# as listed in Section 118-60 and those stations listed in the following table:

Station	Line
8th Street	~~BMT~~ Broadway – 60th Street
23rd Street	~~BMT~~ Broadway – 60th Street
23rd Street	~~IRT~~ Lexington ~~Ave.~~ Avenue
28th Street	~~IRT~~ Lexington ~~Ave.~~ Avenue
33rd Street	~~IRT~~ Lexington ~~Ave.~~ Avenue
34th Street – Penn Station	~~IND~~ 8th ~~Ave.~~ Avenue
59th Street/Lexington Avenue (60th St.)	~~IRT~~ Lexington ~~Ave.~~ Avenue and ~~BMT~~ Broadway – 60th Street

* * *

(c) Conditions

~~(1) For a #residential# or mixed #development#, when a #floor area# bonus is granted pursuant to this Section, alone or in combination with other bonuses, the #lot area# requirements of Sections 23-20 (DENSITY REGULATIONS) and 35-40~~

~~(APPLICABILITY OF DENSITY REGULATIONS TO MIXED BUILDINGS) shall not apply. Instead, the minimum average size of a #dwelling unit# shall be 790 square feet.~~

~~(2)~~(1) Within the #Special Midtown District#, for a #development# or #enlargement# within the Theater Subdistrict on a #zoning lot# containing a theater designated as listed pursuant to Section 81-742 (Listed theaters), the Commission shall find that the requirements of Section 81-743 (Required assurances for continuance of legitimate theater use) have been met.

~~(3)~~(2) Within the #Special Midtown District#, for a #development# or #enlargement# located on a #zoning lot# divided by a Theater Subdistrict Core boundary, as defined in Section 81-71 (General Provisions), the amount of #lot area# eligible for bonus #floor area# shall not exceed an amount equal to twice the #lot area# of that portion of the #zoning lot# located outside the Theater Subdistrict Core.

* * *

74-67
Fire or Police Stations

In all #Residence Districts#, the City Planning Commission may permit fire or police stations, provided that the following findings are made:

(a) that such #use# will serve the ~~#residential#~~ residential area within which it is provided to be located; that there are serious difficulties in locating it in a district wherein it is permitted as of right and from which it could serve the ~~#residential#~~ residential area, which make it necessary to locate such #use# within a #Residence District#; and

(b) in the case of fire stations, that such #use# is so located as to minimize the movement of fire apparatus through local #streets# in ~~#residential#~~ residential areas.

* * *

74-69
Seaplane Bases

In all districts, the City Planning Commission may permit seaplane bases provided that the following findings are made:

(a) that such #use# and the take-off and landing operations it serves are so located as not to impair the essential character or future #use# or #development# of the surrounding area; and

(b) that such #use# is so located as to draw a minimum of vehicular traffic to and through local #streets# in ~~#residential#~~ residential areas.

* * *

74-70
NON-PROFIT HOSPITAL STAFF DWELLINGS

In all #Residence Districts#, or in C1, C2, C3, C4, C5, C6 or C7 Districts, the City Planning Commission may permit #non-profit hospital staff dwellings# located on a #zoning lot#, no portion of which is located more than 1,500 feet from the non-profit or voluntary hospital and related facilities, provided that the following findings are made:

(a) that the #bulk# of such #non-profit hospital staff dwelling# and the density of population housed on the site will not impair the essential character or the future ~~#use#~~ use or ~~#development#~~ development of the surrounding area; and

* * *

74-71
Landmark Preservation

74-711
Landmark preservation in all districts

* * *

The City Planning Commission may prescribe appropriate additional conditions and safeguards which will enhance the character of the #development# and #buildings# on the ~~of said~~ #zoning lot#.

74-712
Developments in Historic Districts

Within Historic Districts designated by the Landmarks Preservation Commission, the City Planning Commission may grant a special permit, in accordance with the following provisions:

(a) In M1-5A and M1-5B Districts, on a #zoning lot# that, as of December 15, 2003, is vacant, is #land with minor improvements# or has ~~where~~ not more that 20 percent of the #lot area# is occupied by existing #buildings# ~~as of December 15, 2003~~, the Commission may modify #use# regulations to permit #residential development# and, below the floor level of the second #story# of any #development#, #uses# permitted under Section 32-15 (Use Group 6), provided that:

* * *

(b) In all districts, the Commission may modif~~ication~~y ~~of~~ #bulk# regulations, except #floor area ratio# regulations, for any #development# on a #zoning lot# that is vacant or is #land with minor improvements#, and in M1-5A and M1-5B Districts, the Commission may make such modifications for ~~on~~ #zoning lots# where not more that 20 percent of the #lot area# is occupied by existing #buildings# as of December 15, 2003, provided the Commission ~~shall~~ finds that such #bulk# modifications:

* * *

74-72
Bulk Modification

74-721
Height and setback and yard regulations

(a) In C4-7, C5-2, C5-3, C5-4, C6-1A, C6-4, C6-5, C6-6, C6-7 or M1-6 Districts, the City Planning Commission may permit modification of the height and setback regulations, including tower coverage controls, for #developments# or #enlargements# located on a #zoning lot# having a minimum area of 40,000 square feet or occupying an entire #block#.

In C5-3, C6-6 and C6-7 Districts on such #zoning lots#, the Commission also may modify #yard# and court regulations, and regulations governing the minimum required distance between #buildings# and/or the minimum required distance between #legally required windows# and walls or #lot lines#, provided that the Commission finds that such modifications:

(1) provide a better distribution of #bulk# on the #zoning lot#;

(2) result in a better relationship of the #building# to open areas, adjacent #streets# and surrounding ~~#development#~~ development; and

* * *

(b) In a C6-4 District, the Commission may modify the supplementary #use# regulations of Section 32-422 (Location of floors occupied by ~~non-residential~~ commercial uses) for #developments# or #enlargements# on #zoning lots# occupying an entire #block# with a basic #commercial~~-~~# floor area ratio# of 10.0, provided the following conditions are met:

* * *

(c) In C5-3, C6-6 and C6-7 Districts, the Commission may modify height and setback and #yard# regulations including tower coverage controls for #developments# or #enlargements# located on a #zoning lot# having an area less than 40,000 square feet, that occupies an entire blockfront on a #wide street#, subject to the following conditions:

* * *

(2) that the #development# or #enlargement# includes on-site amenities, such as #arcades#, #through block arcades# or #covered pedestrian spaces# where the size and dimensions of such spaces are substantially greater than the required minimum standards, and includes skylights or other provisions for additional access of direct natural light so as to provide for an increased penetration of light and air therein at the #street# level of the #development# or #enlargement#, or a transit station improvement that results in a direct major connection to a subway station.

(3) In lieu of condition (c)(2), the #development# or #enlargement# may provide, in the same or an adjoining #block# of such #development# or #enlargement#, compensatory "off-site public open space." For the purposes of this paragraph, (c)(3), the term "adjoining block" shall mean a #block# that is contiguous to the ~~development~~ #block# containing the #development# or #enlargement# but for its separation by a #street# or #street# intersection. The area of such off-site public open space shall be at least 4,000 square feet, or 15 percent of the #lot area# of a #zoning lot# containing the #development# or #enlargement#, whichever is more, and a width of at least 40 feet at any point.

Such public open areas shall have a southern exposure, and adjoin a public sidewalk and be #developed# pursuant to the provisions of Section 37-70 (PUBLIC PLAZAS). A plan for the development and maintenance of such off-site public space shall be approved by the Commission. The off-site public area shall be kept open to the general public in accordance with a time schedule specified by the Commission. In no event shall such off-site public open space be eligible for #floor area# or bonus computation in connection with this or any other #development# or #enlargement#.

For such #developments# or #enlargements#, the Commission may also modify the applicable regulations of Sections 32-51 (Limitations on Business Entrances, Show Windows or Signs) and 36-683 (Restrictions on location of berths near Residence Districts) where adjoining frontage within a distance of 75 feet on the same side of the #street# is occupied by a #community facility# or ground floor #commercial use#, provided that such modification is part of an overall design for #show windows#, signage and entrances or off-street loading berths developed in conjunction with a public amenity such as a #public plaza#, #through block arcade# or #covered pedestrian space#, and will not alter the essential character of the immediate neighborhood.

In the case of existing #~~residential~~ buildings# containing #residences# to remain temporarily on such #zoning lot#, the provisions of Sections 23-70 (MINIMUM REQUIRED DISTANCE BETWEEN TWO OR MORE BUILDINGS ON A

SINGLE ZONING LOT) and 23-80 (COURT REGULATIONS AND MINIMUM DISTANCE BETWEEN WINDOWS AND WALLS OR LOT LINES) may be modified provided that each and every one of the following conditions are met:

(i) that such existing #buildings# with unexpired leasehold interests are located upon such #zoning lot#;

(ii) that the portions of the #zoning lot# where such existing #buildings# are located and are to be demolished shall be redeveloped according to the approved site plan;

(iii) that no temporary or final certificate of occupancy shall be issued for that portion of #floor area# in the ~~new~~ #development# or #enlargement# equal to twice the #floor area# in the temporary existing #buildings# until such #buildings# are vacated, demolished and their sites are redeveloped in accordance with the approved project plan, except that where the Commission shall have determined that the applicant for a special permit has made an offer to purchase the leasehold interests from the lessees at a fair market value of the remainder of the lease term, the Commission may decrease the amount of #floor area# for which no certificate of occupancy may be issued; and

(iv) that the #development# or #enlargement# conform with all the applicable laws relating to construction, operation and maintenance.

The owner of the #zoning lot# shall have prominently displayed thereon a sign stating the date by which the #buildings# are to be demolished.

(4) As a further condition for the issuance of a permit under this paragraph, (c), the owner of the #zoning lot# upon which ~~new~~ #developments# or #enlargements# are to take place, must post a bond or other security payable to the City of New York and approved by the Corporation Counsel as to form, sufficient in amount as determined by the Commission to cover the cost of demolishing the existing #buildings# should the owner fail to so demolish within the prescribed time set forth in the approved project plan, and insure that all #floor area# which is to be vacant in the ~~new~~ #development# shall remain unfinished and vacant.

The bonds or other securities shall be payable to the City of New York if any of the above conditions are violated.

The Commission must find, with each grant for a special permit under this paragraph, (c), that the #development# or #enlargement#:

(i) shall result in improved circulation; and

(ii) would eliminate the undesirable pre-emption of ground level space by private #buildings or other structures#.

In making these findings, the Commission may consider the provision of improved connections to rapid transit facilities, where applicable.

The site plan accompanying each application for a grant of special permit under this paragraph, (c), shall include a schedule indicating the timetable of demolition of all existing #buildings# and the schedule of ~~new~~ #development# or #enlargement# and other improvements on the #zoning lot#.

In addition to the conditions in paragraphs (c)(1), (c)(2), (c)(3) and (c)(4) of this Section, the Commission shall find that the modification of height and setback will provide a better distribution of #bulk# on the #zoning lot# and will not adversely affect other adjacent #zoning lots# by unduly restricting access to light and air to surrounding public spaces, #streets# and properties;

(d) Notwithstanding any other provisions of the Zoning Resolution, where a #development# shares an ~~aggregate~~ #lot line# with a landmark building site for an aggregate distance of at least 90 feet, or contains a historically significant #street# that has been demapped and an archeologically significant site, both of which have been identified by the Landmark Preservation Commission, the Commission may permit modification of the height and setback and #yard# regulations regardless of the lot size, provided that the following findings are made:

* * *

74-73
Sewage Disposal Plants and Pumping Stations

74-731
Private sewage disposal plants

In all #Residence Districts#, #Commercial Districts# and M1 and M2 Districts, the Commission may permit sewage disposal plants provided that such #use# will serve the commercial or ~~#residential#~~ residential area within which or adjacent to which it is to be located; that in the case of a ~~#residential#~~ residential area, such area contains more than 50 #dwelling units#; and that there are serious difficulties in locating it in a district where it is permitted as-of-right from which it could serve the ~~#residential#~~ residential area or commercial area. In addition, the Commission shall refer such application to the Department of Health and the Department of Environmental Protection for a report.

The Commission may prescribe appropriate conditions or safeguards to minimize adverse effects on the character of the surrounding area including safety devices and the concealment of such #use# with fences, buffer zones, barriers or other screening devices, and landscaping.

74-732
Private sewage pumping stations and sewage disposal plants

In all #Residence Districts#, the Commission may permit sanitary or storm water sewage pumping stations and sewage disposal plants provided that such use will serve a ~~#residential~~ development# which contains more than 15 #dwelling units#; and that there are serious difficulties in locating it in a district where it is permitted as-of-right from which it could serve the ~~#residential#~~ residential area. In addition, the Commissioner shall refer such application to the Department of Health and the Department of Environmental Resources for a report. The Commission may review the scope and impact of the proposal on public facilities; and may, in addition, prescribe appropriate conditions or safeguards without dictating the architectural design of individual #buildings# in order to minimize adverse effects on the surrounding area.

As a condition of granting a special permit for a sewage pumping station or a sewage disposal plant ~~or a sewage pumping station~~ the Commission shall find:

(a) in the case of sewage pumping stations, the sewers and treatment plants to which the flow is to be pumped will be adequate to accommodate anticipated future development in the area to be served by these facilities;

(~~a~~b) ~~that~~ in the case of sewage disposal plants serving a ~~#residential#~~ residential area, the related ~~#residential~~ development# is arranged in such a way as best to serve active and passive recreation needs; to protect and preserve scenic assets and natural features such as trees, streams and topographic features; and provides suitable variations in the siting of #buildings# to achieve these objectives; and

~~(b) that in all cases the proposal promotes and protects the public health, safety and general welfare; and~~

(c) in the case of sewage disposal plants, the proposed plant will be adequate for anticipated ~~#development#~~ development in the area to be served; or

~~(d) in the case of sewage pumping stations, the sewers and treatment plants to which the flow is to be pumped will be adequate to accommodate anticipated future development in the area to be served by these facilities.~~

(d) in all cases the proposal promotes and protects the public health, safety and general welfare.

74-733
Municipal sewage disposal plants

In all #Residence Districts#, #Commercial Districts# and M1 and M2 Districts, the Commission may permit municipal sewage disposal plants, provided that there are serious difficulties in locating it in a district where it is permitted as-of-right. The Commission may prescribe appropriate conditions or safeguards to minimize adverse effects on the character of the surrounding area including safety devices and the concealment of such #use# with fences, buffer zones, barriers or other screening devices, and landscaping.

As a condition of granting a special permit for a municipal sewage disposal plant, the Commission shall find:

(a) the proposed plant will be adequate for anticipated development in the area to be served; and

(b) that the proposal promotes and protects the public health, safety and general welfare.

74-734
Municipal sewage pumping stations

In all #Residence Districts#, the Commission may permit municipal sewage pumping stations provided that there are serious difficulties in locating it in a district where it is permitted as-of-right. The Commission may prescribe appropriate conditions or safeguards to minimize adverse effects on the character of the surrounding area including safety devices and the concealment of such #use# with fences, buffer zones, barriers or other screening devices, and landscaping.

As a condition of granting a special permit for ~~a municipal sewage disposal plant or~~ a municipal sewage pumping station, the Commission shall find:

(a) that the proposal promotes and protects the public health, safety and general welfare; and

~~(b) in the case of sewage disposal plants, the proposed plant will be adequate for anticipated development in the area to be served; or~~

(c) ~~in the case of sewage pumping stations,~~ the sewers and treatment plants to which the flow is to be pumped will be adequate to accommodate anticipated future development in the area to be served by these facilities.

74-74
~~General~~ Large-Scale General Development

For #~~general~~ large-scale general developments# involving several #zoning lots# but planned as a unit, the district regulations may impose unnecessary rigidities and thereby prevent achievement of the best possible site plan within the overall density and #bulk# controls. ~~For these #developments#, t~~The regulations of this Section are designed to allow greater flexibility for the purpose of securing better site planning, while safeguarding the present or future use and development of the surrounding area.

No portion of a #~~general~~ large-scale general development# shall contain:

(a) any #use# not permitted by the applicable district regulations for such portion. When an existing #building# in a #~~general~~ large-scale general development# is occupied by a #non-conforming use#, any #enlargement# of such existing #building# shall be subject to the requirements set forth in Section 52-00 (NON-CONFORMING USES: DEFINITIONS AND GENERAL PROVISIONS);

(b) any #zoning lot# or portion thereof, that is part of a #large-scale residential development# or #large-scale community facility development#.

74-741
Requirements for application

An application to the City Planning Commission for the grant of a special permit pursuant to Section 74-74 (~~General~~ Large-Scale General Development) for a #~~general~~ large-scale general development# shall include a site plan showing the boundaries of the #~~general~~ large-scale general development# and the proposed location and #use# of all #buildings or other structures# on each #zoning lot# comprising the #~~general~~ large-scale general development#.

74-742
Ownership

Except as otherwise provided in this Section, any #~~general~~ large-scale general development# for which application is made for a special permit in accordance with the provisions of Section 74-74 (~~General~~ Large-Scale General Development) shall be on a tract of land which at the time of application is all under the control of the applicant(s) as the owner(s) or holder(s) of a written option to purchase. No special permit shall be granted ~~for such #development#~~ unless the applicant(s) acquired actual ownership (single fee ownership or alternate ownership arrangements according to the #zoning lot# definition in Section 12-10 (DEFINITIONS) for all #zoning lots# comprising the #general large-scale development#) of, or executed a binding sales contract for, all of the property comprising such tract.

When a #~~general~~ large-scale general development# is located within a designated urban renewal area, the City's urban renewal agency, or a person authorized by such agency, may apply for and be granted a special permit under the provisions of Section 74-74 even though such #~~general~~ large-scale general development# does not meet the ownership requirements set forth elsewhere in this Section. All parcels comprising such #~~general~~ large-scale general development# shall be within the designated urban renewal area and subject to the urban renewal controls set forth in the approved urban renewal plan.

When a #~~general~~ large-scale general development# is to be #developed# or #enlarged# through assemblage by any other governmental agency, or its agent, having the power of condemnation, a special permit may be applied for and granted under the provisions of Section 74-74 even though such #~~general~~ large-scale general development# does not meet the ownership requirements set forth elsewhere in this Section.

74-743
Special provisions for bulk modification

(a) For a #~~general~~ large-scale general development#, the City Planning Commission may permit:

(1) distribution of total allowable #floor area#, #rooming units#, #dwelling units#, #lot coverage# and total required #open space# under the applicable district regulations within a #~~general~~ large-scale general development# without regard for #zoning lot lines# or district boundaries subject to the following limitations:

(i) no distribution of #bulk# across the boundary of two districts shall be permitted for a #use# utilizing such #bulk# unless such #use# is permitted in both districts;

(ii) when a #~~general~~ large-scale general development# is located partially in a #Residence District# or in a C1, C2, C3 or C4-1 District and partially in other #Commercial# or #Manufacturing Districts#, no transfer of #commercial~~-~~#floor area# to a #Residence District# or to a C1, C2, C3 or C4-1 District from other districts shall be permitted;

(2) location of #buildings# without regard for the applicable #yard#, #court#, distance between #buildings#, or height and setback regulations;

(3) variation in the location of primary business entrances and #show windows# along frontages adjacent to #zoning lots# outside the #~~general~~ large-scale general development# without regard to regulations applicable near #Residence District# boundaries;

(4) the maximum #floor area ratio# permitted pursuant to Section 23-142 (In R6, R7, R8 or R9 Districts) for the applicable district without regard for #height factor# or #open space ratio# requirements provided that the #~~general~~ large-scale general development# is located partially in a C6-1, C6-2 or C6-3 District within the boundaries of Community District 7 in Manhattan or located within a C4-4 District within the boundaries of Queens Community District 7 and that a minimum of 50 percent of the required #open space# is provided within the #~~general~~ large-scale general development#. Required #open space# for the purposes of this paragraph, (a)(4), shall be calculated by utilizing the smallest #open space ratio# at the maximum #floor area ratio# pursuant to Section 23-142 for the applicable district;

(5) in an #Inclusionary Housing designated area# in a C4-6 or C5 District:

(i) a portion of the #lot area# that contains a wholly #commercial building# to be excluded from the calculation of #floor area# for any other #buildings# on the remainder of the #zoning lot#; or

(ii) #community facility~~-~~# floor area# located above the ground floor to be excluded from the calculation of the amount of #affordable housing# required pursuant to Section 23-95; or

(6) modification of the requirements of Section 23-86 (Minimum Distance Between Legally Required Windows and Walls or Lot Lines) for #developments# or #enlargements#, where:

(i) the required minimum distance as set forth in Section 23-86 is provided between the #legally required window# in the ~~new~~ #development# or #enlargement# and a wall or #lot line # on an abutting property; and

(ii) the required minimum distance is provided by a light and air easement acceptable to the Department of City Planning and recorded in the County Clerk's office in the county in which such tracts of land are located.

(b) In order to grant a special permit pursuant to this Section for any #~~general~~ large-scale general development#, the Commission shall find that:

(1) the distribution of #floor area#, #open space#, #dwelling units#, #rooming units# and the location of #buildings#, primary business entrances and #show windows# will result in a better site plan and a better relationship among #buildings# and open areas to adjacent #streets#, surrounding ~~#development#~~ development, adjacent open areas and shorelines than would be possible without such

distribution and will thus benefit both the occupants of the #~~general~~ large-scale general development#, the neighborhood, and the City as a whole;

(2) the distribution of #floor area# and location of #buildings# will not unduly increase the #bulk# of #buildings# in any one #block# or unduly obstruct access of light and air to the detriment of the occupants or users of #buildings# in the #block# or nearby #blocks# or of people using the public #streets#;

(3) where a #zoning lot# of a #~~general~~ large-scale general development# does not occupy a frontage on a mapped #street#, appropriate access to a mapped #street# is provided;

(4) considering the size of the proposed #~~general~~ large-scale general development#, the #streets# providing access to such #~~general~~ large-scale general development# will be adequate to handle traffic resulting therefrom;

(5) when the Commission has determined that the #~~general~~ large-scale general development# requires significant addition to existing public facilities serving the area, the applicant has submitted to the Commission a plan and timetable to provide such required additional facilities. Proposed facilities that are incorporated into the City's capital budget may be included as part of such plan and timetable;

(6) where the Commission permits the maximum #floor area ratio# in accordance with the provisions of paragraph (a)(4) of this Section, the #open space# provided is of sufficient size to serve the residents of new or #enlarged buildings#. Such #open space# shall be accessible to and usable by all residents of such new or #enlarged buildings#, have appropriate access, circulation, seating, lighting and paving, and be substantially landscaped. Furthermore, the site plan of such #~~general~~ large-scale general development# shall include superior landscaping for #open space# of the new or #enlarged buildings#;

(7) where the Commission permits the exclusion of #lot area# or #floor area# in accordance with the provisions of paragraph (a)(5) of this Section, such modification will facilitate a desirable mix of #uses# in the #~~general~~ large-scale general development# and a plan consistent with the objectives of the Inclusionary Housing program; and

(8) a declaration with regard to ownership requirements in paragraph (b) of the #~~general~~ large-scale general development# definition in Section 12-10 (DEFINITIONS) has been filed with the Commission.

The Commission may prescribe additional conditions and safeguards to improve the quality of the #~~general~~ large-scale general development# and to minimize adverse effects on the character of the surrounding area.

For a phased construction program of a multi-building complex, the Commission may, at the time of granting a special permit, require additional information, including but not limited to a proposed time schedule for carrying out the proposed #~~general~~ large-scale general development#, a phasing plan showing the distribution of #bulk# and #open space# and, in the case of a site plan providing for common #open space#, common open areas or common parking areas, a maintenance plan for such space or areas and surety for continued availability of such space or areas to the people they are intended to serve.

74-744
Modification of use regulations

(a) Waterfront and related #commercial uses#

In a C4 District, the City Planning Commission may modify applicable district

regulations to allow certain boating and related #uses# listed in Use Group 14A, not otherwise allowed in such district, provided the Commission shall find that:

(1) the #uses# are appropriate for the location and blend harmoniously with the rest of the #~~general~~ large-scale general development#; and

(2) the #streets# providing access to such #uses# will be adequate to handle the traffic generated thereby.

(b) Location of #commercial uses#

For any #~~general~~ large-scale general development#, the City Planning Commission may permit #residential# and non-#residential uses# to be arranged within a #building# without regard for the regulations set forth in Section 32-42 (Location within Buildings), provided the Commission shall find:

* * *

74-745
Location of accessory parking spaces and loading berths

When a #general large-scale general development# includes two or more #zoning lots#, the City Planning Commission may permit permitted or required #accessory# off-street parking spaces, bicycle parking spaces or loading berths to be located anywhere within a #general large-scale general development# without regard for #zoning lot lines#, provided that the Commission shall find:

* * *

74-746
Special provisions for development or enlargement over streets

Within a #~~general~~ large-scale general development#, when the volume above a #street#, or portion thereof, has been eliminated, discontinued and closed, the City Planning Commission may permit such volume to be considered part of an adjoining #zoning lot# and may allow, within such volume, a #development# or #enlargement# that is part of a #building# or #buildings# in the #~~general~~ large-scale general development#. In no event shall such volume contribute to the amount of #lot area# counted for the purposes of qualifying as a #~~general~~ large-scale general development# or generating any #floor area#.

* * *

(b) In order to grant the special permit, the City Planning Commission shall find that the #development# or #enlargement# in such volume:

(1) is functionally necessary or will improve the internal circulation within the #~~general~~ large-scale general development#, or will improve vehicular or pedestrian circulation on adjacent #streets#;

* * *

74-747
Previously granted special permits

* * *

In no event may the Commission grant a modification of a special permit approved prior to February 22, 1990, that would require additional #bulk# distribution among #zoning lots# or modification of the height and #lot coverage# limitations previously established. Any modifications exceeding the limitations set forth herein shall be subject to the provisions of the new Section 74-74 (~~General~~ Large-Scale General Development).

No existing #publicly accessible open area# or other public amenity for which a #floor area# bonus or any increase in tower coverage above 40 percent of the #lot area# of the #zoning lot# has been received under previous Section 74-74 (Commercial Development Extending into More than One Block) prior to February 22, 1990, shall be eliminated or reduced in size except by special permit of the Commission pursuant to a finding that a proposed change will provide a greater public benefit in the light of the public amenity's purpose.

Any #sign# shown on a site plan incorporated as part of a special permit of the City Planning Commission under the provisions of Section 74-74 (~~General~~ Large-Scale General Development) prior to February 27, 2001, may be erected and maintained in accordance with such special permit.

74-75
Educational Construction Fund Projects

In R5, R6, R7, R8, R9 or R10 Districts, in C1 or C2 Districts mapped within such #Residence Districts#, or in C1-6, C1-7, C1-8, C1-9, C2-6, C2-7, C2-8, C4, C5, C6 or C7 Districts, for combined #school# and #residences# including air rights over #schools# built on a #zoning lot# owned by the New York City Educational Construction Fund, the City Planning Commission may permit utilization of air rights; modify the requirements that open area be accessible to and usable by all persons occupying a #dwelling unit# or #rooming unit# on the #zoning lot# in order to qualify as #open space#; permit ownership, control of access and maintenance of portions of the #open space# to be vested in the New York City Educational Construction Fund or City agency successor in title; permit modification of #yard# regulations and height and setback regulations; authorize the total #floor area#, #open space#, #dwelling units# or #rooming units# permitted by the applicable district regulations on such site to be distributed without regard for district boundaries; and authorize an increase of 25 percent in the number of #dwelling units# or #rooming units# permissible under the applicable district regulations. For the purposes of this Section, a #zoning lot# owned by the New York City Educational Construction Fund may also include a tract of land under single fee ownership or alternate ownership arrangements according to the #zoning lot# definition in Section 12-10, when such tract of land includes a parcel which was the site of a public school listed in the following table.

School	Community District
P.S. 151	CD 8, Manhattan

The total number of #dwelling units# or #rooming units# and #residential floor area# shall not exceed that permissible for a #residential building# on the same #zoning lot#.

The distribution of ~~the~~ #bulk# ~~of the total #development#~~ on the #zoning lot# shall permit adequate access of light and air to the surrounding #streets# and properties.

* * *

(d) the Commission shall find that:

(1) a substantial portion of the #open space# which is not accessible exclusively to the occupants of such #residence# will be accessible and usable by them on satisfactory terms part-time;

(2) playgrounds, if any, ~~developed~~ provided in conjunction with the #school# will be so designed and sited in relation to the #residence# as to minimize any adverse effects of noise; and

* * *

74-76
Plazas

74-761
Elimination or reduction in size of bonused public amenities

* * *

The Commission may prescribe additional conditions to enhance the relationship of public open areas, #buildings# or other amenities ~~and the #development#~~ on the #zoning lot# to the surrounding areas.

* * *

74-78
Conversions of Non-Residential ~~Buildings~~ Floor Area

74-781
Modifications by special permit of the City Planning Commission of uses in M1-5A and M1-5B Districts

In M1-5A and M1-5B Districts, the City Planning Commission may, after public notice and hearing and subject to Board of Estimate approval, permit modification of Section 42-14, paragraphs (D)(1)(c), (1)(d), (2)(a) or (D)(2)(b), provided that the Commission finds that the owner of the space, or a predecessor in title, has made a good faith effort to rent such space to a mandated #use# at fair market rentals. Such efforts shall include but not be limited to: advertising in local and citywide press, listing the space with brokers, ~~notifying the New York City Office of Economic Development,~~ and informing local and citywide industry groups. Such efforts shall have been actively pursued for a period of no less than six months for #buildings# under 3,600 square feet and one year for #buildings# over 3,600 square feet, prior to the date of the application for a special permit.

74-782
Residential conversion in C6-1G, C6-2G, C6-2M, C6-4M, M1-5A, M1-5B, M1-5M and M1-6M Districts

In C6-1G, C6-2G, C6-2M, C6-4M, M1-5M and M1-6M Districts, the City Planning Commission may permit modification of the requirements of Sections 15-021, paragraph (e), or 15-21, and in M1-5A and M1-5B Districts, the City Planning Commission may permit the modification of the requirements of Section 42-14, paragraph (D)(1)(b), provided that the Commission finds that:

(a) the #conversion# will not harm the industrial sector of the City's economy;

(b) the applicant for the special permit or a predecessor in title, has made a good faith effort to rent such space to a mandated #use# at fair market rentals. Such effort shall have been actively pursued for a minimum of one year immediately preceding the application. A good faith effort shall include, but not be limited to, advertising in local and citywide press, listing the space with brokers doing business in the industrial real estate market, ~~notifying the New York City Office of Economic Development,~~ and informing local and citywide industry groups. The applicant shall provide records showing the specific efforts to rent such space;

(c) there is sufficient alternative space to meet the needs of #commercial# and #manufacturing uses# in the area. The vacancy rate for industrial space in the area shall be one evidentiary element to prove the availability of alternative space;

(d) City, state and federal economic development programs, to the extent applicable, had been explored and found not suitable;

(e) the commercial and industrial tenants were given the opportunity by the applicant, or

predecessor in title, to remain in the spaces at fair market rentals, and the property owner or predecessor in title did not cause the vacating of the space for the additional #conversion#;

(f) the neighborhood in which the conversion is taking place will not be excessively burdened by increased ~~#residential#~~ residential activity; and

(g) all #dwelling units# or #joint living-work quarters for artists# permitted by this special permit meet the standards of the applicable district for such units or quarters.

If the Commission determines that #floor area# in the #building#, or portion thereof, was occupied as #dwelling units# or #joint living-work quarters for artists# on September 1, 1980, findings (b), (c), (d), and (e) of this Section shall not be required for the grant of a special permit for such #floor area#, provided that a complete application to prove occupancy as a #dwelling unit# or #joint living-work quarters for artists# is submitted to the City Planning Commission by the owner of the #building# or the occupant of a #dwelling unit# or #joint living-work quarters for artists# in such #buildings# not later than June 21, 1983. In addition, the Commission must find that there is no substantial evidence that the landlord forced commercial or manufacturing tenants to vacate such #floor area# through harassment, non-renewal of leases, or the charging of rents in excess of the then fair market value. Notwithstanding anything to the contrary above, the Commission shall not grant or deny a special permit pursuant to the provisions of this Section unless an application for such special permit has been submitted by the owner of the #building#.

The Commission shall request a report from the Office of Economic Development regarding information useful in making findings (a), (b), (c), (d), and (e) of this Section. Said report is to be provided within 30 days of the Commission's request.

~~The applicant shall provide a copy of any application for a special permit under this Section to the #Industrial Loft Advisory Council#, c/o Mayor's Office of Economic Development.~~

In granting the special permit under this Section, the Commission shall require the preservation of the maximum amount of #floor area# for #commercial# or #manufacturing uses# that the Commission deems feasible.

74-79
Transfer of Development Rights from Landmark Sites

In all districts except R1, R2, R3, R4 or R5 Districts or C1 or C2 Districts mapped within such districts, for ~~new~~ #developments# or #enlargements#, the City Planning Commission may permit development rights to be transferred to adjacent lots from lots occupied by landmark #buildings or other structures#, may permit the maximum permitted #floor area# on such adjacent lot to be increased on the basis of such transfer of development rights, may permit, in the case of ~~#residential~~ developments# or #enlargements# containing #residences#, the minimum required #open space# or the density requirements to be reduced on the basis of such transfer of development rights, may permit variations in the front height and setback regulations and the regulations governing the size of required loading berths, and minor variations in #public plaza#, #arcade# and #yard# regulations, for the purpose of providing a harmonious architectural relationship between the #development# or #enlargement# and the landmark #building or other structure#.

* * *

74-791
Requirements for application

An application to the City Planning Commission for a grant of a special permit to allow a transfer of development rights and construction based thereon shall be made by the owners of the respective #zoning lots# and shall include: a site plan of the landmark lot and the adjacent lot, including plans for all #developments# or #enlargements# on the adjacent lot; a program for the continuing maintenance of the landmark; and such other information as may be required by the

City Planning Commission. The application shall be accompanied by a report from the Landmarks Preservation Commission.

A separate application shall be filed for each independent "adjacent lot" to which development rights are being transferred under this Section.

74-792
Conditions and limitations

(a) For the purposes of this Section, except in C5-3, C5-5, C6-6, C6-7 or C6-9 Districts, the basic maximum allowable #floor area# for a #zoning lot# occupied by a landmark shall be the maximum #floor area# allowed by the applicable district regulations on maximum #floor area ratio# or minimum required #open space ratio# and shall not include any additional #floor area# allowed for #public plazas#, #arcades# or any other form of bonus whether by right or special permit.

(b) The maximum amount of #floor area# that may be transferred from any #zoning lot# occupied by a landmark #building# shall be computed in the following manner:

(1) the maximum allowable #floor area# that could be built for #buildings# other than #community facility buildings# under existing district regulations on the same #zoning lot# if it were undeveloped;

(2) less the total #floor area# of all #buildings# on the landmark lot;

(3) the figure computed from paragraphs (a) and (b) of this Section, inclusive, shall be the maximum amount that may be transferred to any one or number of adjacent lots; and

(4) ~~development rights to unbuilt but allowable~~ unutilized #floor area# may be transferred from one or any number of #zoning lots# occupied by a landmark #building# to one or any number of #zoning lots# adjacent to the landmark lot so as to increase the basic maximum allowable #floor area# that may be ~~#developed#~~ utilized on such adjacent #zoning lots#. For each such adjacent #zoning lot#, the increase in #floor area# allowed under the provisions of this Section shall in no event exceed the basic maximum #floor area# allowable on such adjacent #zoning lot# by more than 20 percent.

(c) When adjacent lots are located in C5-3, C5-5, C6-6, C6-7 or C6-9 Districts and are to be #developed# or #enlarged# with #commercial buildings#, the following conditions and limitations shall apply:

(1) the maximum amount of #floor area# that may be transferred from any #zoning lot# occupied by a landmark #building# shall be the maximum #floor area# allowed by Section 33-12 for #commercial buildings# on said landmark #zoning lot#, as if it were undeveloped, less the total #floor area# of all existing #buildings# on the landmark #zoning lot#;

(2) for each such adjacent #zoning lot#, the increase in #floor area# allowed by the transfer ~~of development rights under~~ pursuant to this Section shall be over and above the maximum #floor area# allowed by the applicable district regulations; and

(3) the City Planning Commission may require, where appropriate, that the design of the #development# or #enlargement# include provisions for public amenities such as, but not limited to, open public spaces, subsurface pedestrian passageways leading to public transportation facilities, #public plazas# and #arcades#.

(d) In any and all districts, the transfer once completed shall irrevocably reduce the amount of #floor area# that can be ~~#developed#~~ utilized upon the lot occupied by a landmark by the

amount of #floor area# transferred. In the event that the landmark's designation is removed or if the landmark #building# is destroyed, or if for any reason the landmark #building# is #enlarged# or the landmark lot is redeveloped, the lot occupied by a landmark can only be #developed# or #enlarged# up to the amount of permitted #floor area# as reduced by the transfer.

(e) As a condition of permitting such transfers of development rights, the Commission shall make the following findings:

(1) that the permitted transfer of #floor area# or variations in the front height and setback regulations will not unduly increase the #bulk# of any ~~new~~ #development# or #enlargement#, density of population or intensity of use in any #block# to the detriment of the occupants of #buildings# on the #block# or nearby #blocks#, and that any disadvantages to the surrounding area caused by reduced access of light and air will be more than offset by the advantages of the landmark's preservation to the local community and the City as a whole;

(2) that the program for continuing maintenance will result in the preservation of the landmark; and

(3) that in the case of landmark sites owned by the City, State or Federal Government, transfer of development rights-shall be contingent upon provision by the applicant of a major improvement of the public pedestrian circulation or transportation system in the area.

The Commission shall give due consideration to the relationship between the landmark #building# and any ~~new~~ #buildings developed# or #enlarged# on the adjacent lot regarding materials, design, scale and location of #bulk#.

The Commission may prescribe appropriate conditions and safeguards to minimize adverse effects on the character of the surrounding area.

74-793
Transfer instruments and notice of restrictions

The owners of the landmark lot and the adjacent lot shall submit to the City Planning Commission a copy of the transfer instrument legally sufficient in both form and content to effect such a transfer. Notice of the restrictions upon further #development# or #enlargement# on ~~of~~ the lot occupied by the landmark and the adjacent lot shall be filed by the owners of the respective lots in the place and county designated by law for the filing by the owners of the respective lots in the place and county designated by law for the filing of deeds and restrictions on real property, a certified copy of which shall be submitted to the Commission.

Both the instrument of transfer and the notice of restrictions shall specify the total amount of #floor area# to be transferred, and shall specify by lot and #block# numbers, the lots from which and the lots to which, such transfer is made.

74-80
Transient Hotels

In R10H Districts, the City Planning Commission may permit #transient hotels#. Where a #building# in existence on December 15, 1961, is located on a #zoning lot#, a substantial portion of which is located in an R10H District and the remainder in a #Commercial District#, the Commission may also permit the #conversion# of specified #floor area# within such #building# from #residential use# to #transient hotel use# without regard to the #floor area#, supplementary #use# or density regulations otherwise applicable in the #Commercial District#. The Commission may also allow any subsequent #conversion# of such specified #floor area# to and from #residential# or #transient hotel use# to occur without further Commission approval, subject to the conditions of the special permit.

As a condition precedent to the granting of such #use# or #bulk# modifications, the Commission shall find that such modifications will not impair the essential character of the #Residence District#.

The Commission may prescribe appropriate conditions and safeguards to minimize adverse effects on the character of the surrounding area.

* * *

74-82
Through Block Arcades

* * *

In the districts with an equivalent #residential floor area ratio# of 10, any #floor area# bonus earned by providing a #through block arcade# may be applied to increase the #residential ~~bulk~~ floor area# of a #mixed building# provided the maximum #floor area ratio# for the #residential# portion does not exceed 12.0.

Any #floor area# bonus earned by providing a #through block arcade# may be applied to increase the #residential ~~bulk~~ floor area# of a #mixed building# provided the maximum #floor area ratio# for the #residential# portion does not exceed 12.0.

Each application for a #through block arcade# must meet the following criteria:

(1) result in substantial improvement of pedestrian circulation; and

(2) provide appropriate secondary #commercial# frontage along the #through block arcade# such as small shops and restaurants.

* * *

74-843
Preservation of existing buildings within certain developments containing open areas

* * *

(l) that a roof area of ~~new~~ #development# shall be landscaped for use by ~~#residential#~~ residential tenants and shall:

(1) be restricted to occupants of the #residential# portion and their guests for whom no admission or membership fees are charged;

(2) be directly accessible from a lobby or other public area served by the ~~#residential#~~ residential elevators;

(3) be landscaped including trees or shrubbery, except where covered or developed with recreational facilities and seating areas; and

(4) contain not less than 2,500 square feet of continuous area open to the sky on a single level with a minimum dimension of not less than 40 feet.

(m) that the total #development# will result in satisfactory site planning and satisfactory urban design relationships of #buildings# to adjacent #streets# and surrounding ~~#developments#~~ developments;

(n) that the ~~new~~ #development# will not have a negative environmental impact on the neighborhood or change the character of the neighborhood.

(o) that the basic #floor area ratio# for ~~any new #development# on a~~ the #zoning lot# may be

increased from 10.0 to 12.0 for complying with the provisions of this Section.

* * *

74-844
Preservation of community facility uses within certain developments containing public open areas

* * *

Notwithstanding any other provision of the Zoning Resolution, the #community facility# portion of the #development# may be conveyed by deed, lease or otherwise to the institution operating the #community facility building# and for the purposes of this #development# such conveyance shall be deemed not to alter the single #zoning lot# status of the #zoning lot# containing the total #development# authorized under this Section. In no event shall the #floor area# of the total #development# including the #community facility# portion exceed a #floor area ratio# of 11.0.

74-85
Special Height and Setback Regulations

74-851
Height and setback regulations for certain ~~residential~~ buildings containing residences

In R8, R9 and R10 Districts, and in C1-7, C1-8, C1-9, C2-7 and C2-8 Districts, the City Planning Commission may permit modifications of height and setback regulations for ~~new~~ ~~#residential~~ developments# or #enlargements# containing #residences# provided the following findings are made:

(a) that the resulting site plan affords better placement of the #buildings# on the #zoning lot# with improved arrangement of #open space# and improved access of light and air for the #dwelling units#; and

(b) that the site is adjacent to or opposite a permanent space comprising an area of at least three acres such as a park, public place, waterfront, wharf property, wharves or docks, and that the resulting placement of the #buildings# will not unduly obstruct access of light and air in the #street# or on adjacent #zoning lots#.

The Commission may prescribe appropriate conditions or safeguards to minimize adverse effects on the character of the surrounding area.

However, the provisions of this Section shall not apply to ~~#developments# built pursuant to the~~ #Quality Housing buildings# ~~Program~~.

74-852
Height and setback regulations for ~~developments on~~ zoning lots divided by district boundaries

For ~~a #development# on~~ a #zoning lot# divided by a boundary between an R8 District, or a #Commercial District# permitting an equivalent #residential floor area ratio#, and an R10 District, or a #Commercial District# permitting an equivalent #residential floor area ratio#, the City Planning Commission may permit modifications of the height and setback regulations for that portion of ~~the~~ a #development# which fronts on a #wide street# and is located in the R8 or equivalent District, provided it finds that such modification will not unduly obstruct access of light and air to surrounding #streets# and properties.

The Commission may prescribe additional conditions and safeguards to minimize adverse effects on the character of the surrounding area.

74-86
Accessory Outdoor Swimming Pools for Residences

The City Planning Commission may permit, as #accessory# to a #use# in Use Group 2 other than a #single-family# or #two-family residence#, an outdoor swimming pool to be located not less than 50 feet from any #lot line#, provided that such pool is so located as not to impair the essential character of the ~~#residential#~~ residential neighborhood.

The Commission may require that the pool be appropriately screened from other areas on the same or adjacent #zoning lots#. In special circumstances where the Commission finds that the design operates as a suitable buffer or the conditions of topography so warrant, the minimum distance of 50 feet may be reduced or waived.

The Commission shall in each case give due consideration to the effect of such location on the adjacent ~~#residential buildings#~~ #residences# and the #street# and may impose appropriate conditions and safeguards.

* * *

74-871
Floor area bonus for covered pedestrian space

For the #development# or #enlargement# of a #commercial#, ~~or~~ #community facility# ~~development#~~ or #mixed building#, for each square foot of #covered pedestrian space# provided on a #zoning lot#, the total #floor area# permitted on that #zoning lot# under the provisions of Section 33-12 (Maximum floor area ratio) may be increased as set forth in the following table:

PERMITTED ADDITIONAL FLOOR AREA
PER SQUARE FOOT OF COVERED PEDESTRIAN SPACE

Basic (in square feet)	Maximum (in square feet)	District
11	14	C5-3 C5-5 C6-6 C6-7 C6-9
8	11	C4-7 C5-2 C5-4 C6-4 C6-5 C6-8

In no event shall the resulting #floor area ratio# exceed the amount set forth in Section 33-12 by more than 20 percent. Any #floor area# bonus earned by providing a #covered pedestrian space# may be applied to increase the #residential floor area ~~bulk~~# of a #mixed building# provided the maximum #floor area ratio# for the #residential# portion does not exceed 12.0.

Any portion of the #covered pedestrian space# that is within ten feet of a #street line# or #lot line# and that is extended along such #street line# or #lot line# on either side of an entrance to it from an adjoining #street#, #arcade#, #publicly accessible open area#, #court#, #yard# or other #covered pedestrian space#, may receive only that #floor area# bonus accorded to an #arcade#.

The basic #floor area# bonus may be increased by providing one or more of the following additional amenities:

(a) An escalator, providing pedestrian access from sidewalk level to any floor level containing #uses# specified in paragraph (c) of Section 74-872 (Design requirements for covered pedestrian space). Such escalator may be either within or directly accessible from the #covered pedestrian space#. The basic #floor area# bonus may be increased by 1.5 square feet per square foot of #covered pedestrian space# for each floor level connected by such escalator. However, the #floor area# bonus earned for the total #covered pedestrian space# by providing such escalator shall not exceed the allowable maximum set forth in the table.

(b) Where the height over at least one-third of the #covered pedestrian space# in one location is increased by more than one #story# of the #building# above the required height, the basic #floor area# bonus for that portion may be increased by 1.5 square feet per square foot of such raised portion for each such #story#. However, the #floor area# bonus earned for the total #covered pedestrian space# by providing such additional height shall not exceed the allowable maximum set forth in the table.

(c) Where direct access from the #covered pedestrian space# to a subway station mezzanine or concourse is provided ~~in the #development#~~ and such connection is major, necessary, and kept open to the general public for the same hours as the #covered pedestrian space# or as specified by the Commission, an additional bonus of two square feet of #floor area# per square foot of #covered pedestrian space# may be permitted over the amount specified in the table.

74-872
Design requirements for covered pedestrian spaces

In order to qualify for a #floor area# bonus, a #covered pedestrian space# shall be directly accessible to the public from the adjoining #street#, #arcade#, #through block arcade#, #publicly accessible open area#, #court#, #yard#, #pedestrian mall# or other #covered pedestrian space# which is a part of the public pedestrian circulation system, and shall:

(a) have an area of at least 3,000 square feet and a minimum width, at any point, of 20 feet. For spaces between 100 feet and 150 feet in length, the minimum width shall be 25 feet. For spaces longer than 150 feet, the average width shall be at least 30 feet;

(b) have a height of at least 30 feet;

(c) have appropriate #uses# permitted in the district, such as, but not limited to, small stores and cafes, occupying the maximum feasible frontage along those bounding walls of the #covered pedestrian space# which do not abut #lot lines# or #street lines#. At least 50 percent of such frontage shall be ~~developed with~~ comprised of individual #uses# each of which has a frontage not exceeding 25 feet and the frontage of any other single #use# may not exceed 40 feet. In no event may banks, loan offices, insurance offices or similar office type #uses# occupy any portion of the frontage of the #covered pedestrian space#. Access to other #uses# within a #building# may be provided from the #covered pedestrian space# if such #uses# are not located at the same #story# as the pedestrian space;

* * *

A portion of the #covered pedestrian space# shall be ~~developed as~~ public sitting areas with appropriate facilities such as cafes or other public seating arrangements.

* * *

74-873
Findings for covered pedestrian spaces

As a condition for permitting such bonus #floor area#, the Commission shall find that:

* * *

(e) the distribution of the #bulk# ~~of the total #development#~~ on the #zoning lot# permits satisfactory access of light and air to surrounding #streets# and properties; and

* * *

74-88
Modification of Height and Setback and Street Wall Regulations

Upon application, the City Planning Commission may permit the modification of height and setback and #street wall# regulations of Section 23-~~652~~651 (Tower-on-a-base)~~, paragraph (b) of Section 24-54 (Tower Regulations)~~ and paragraph (a) of Section 35-63 (Special Tower Regulations for Mixed Buildings), except for the permitted tower coverage or the required #floor area# distribution below a height of 150 feet, and may permit modification of the requirements of paragraph (a)(1)(ii) of Section 24-54 (Tower Regulations), provided the Commission makes the following findings:

(a) that such modification will enhance the contextual relationship of the ~~new #building#~~ #development# or #enlargement# to nearby #buildings# and improve the overall scale, site design and architectural harmony among #buildings# in the neighborhood; and

* * *

74-89
Bulk Modifications for Telephone Exchanges or Other Communication Equipment Structures

In C1 and C2 Districts when mapped in R6, R7, R8, R9 and R10 Districts and in C1-6, C1-7, C1-8, C1-9, C2-6, C2-7, C2-8, C4-2, C4-3, C4-4, C4-5, C4-6, C5-1, C6-1, C6-2, C6-3, C7, C8-2, C8-3, C8-4, M1-2, M1-3, M1-4, M1-5, M2 and M3 Districts, the City Planning Commission may permit modification of the #bulk# regulations for telephone exchanges or other communications equipment structures not existing on December 15, 1961, provided that the ~~#development# does not exceed a #floor area ratio# of 10.0, is located on a~~ #zoning lot# ~~having~~ has a minimum area of 40,000 square feet, a #floor area ratio# of no greater than 10.0 and that the following findings are made:

* * *

74-90
Use and Bulk Modifications for Certain Community Facility Uses

In all #Residence# and #Commercial Districts# except C7 and C8 Districts, which~~,~~ are in the Community Districts ~~designated in Section 74-903~~ within which, pursuant to Section 22-42 (Certification of Certain Community Facility Uses), nursing homes and health-related facilities are not permitted as-of-right, the City Planning Commission may permit the #development#, #extension# or #enlargement# or change of #use# involving such nursing homes and health-related facilities where such #uses# are not permitted as-of-right, provided that the Commission finds:

(a) that the architectural landscaping treatment and the height of the proposed #building# containing such #uses# blends harmoniously with the topography of the surrounding area;

(b) that the proposed ~~#development#~~ facility will not require any significant additions to the supporting services of the neighborhood or that provision for adequate supporting services has been made;

(c) that the #streets# providing access to such #use# are adequate to handle the traffic generated thereby or provision has been made to handle such traffic;

(d) that the disadvantages to the community imposed by the concentration of these facilities in the Community District are outweighed by the benefits derived from the proposed #use#; and

(e) that in R1 and R2 Districts, such facilities are not proprietary nursing homes, proprietary health-related facilities or proprietary domiciliary care facilities for adults.

The Commission may prescribe appropriate conditions or safeguards to minimize the adverse effect of any #use# permitted under this Section on the character of the surrounding area.

Where such #use# is authorized by the Commission, it may be eligible for #bulk# modification,

pursuant to the provisions of Section 74-901 or Section 74-902.

~~#Developments# approved~~ Special permits granted by the Commission under Sections 74-901 or 74-902 on or before January 10, 1974, shall not require further approval or action pursuant to this Section, Section 22-42 or Section 32-45.

In the event amendment CP-22490 is not held invalid by the courts, it shall be effective insofar as limiting vested rights is concerned but shall be superseded in all other respects by amendments CP-22490(A) and CP-22566.

74-901
Certain community facility uses in R1 and R2 Districts and certain Commercial Districts

In R1 and R2 Districts, and in C1 and C2 Districts mapped within such #Residence Districts# for any #development#, #extension# or #enlargement# or change of #use# involving any #community facility uses# other than domiciliary care facilities for adults or those for which a permit is required by the Board of Standards and Appeals pursuant to Sections 73-12 (Community Facility Uses in R1 or R2 Districts) or 73-13 (Open Uses in R1 or R2 Districts), the City Planning Commission may permit the allowable #community facility ~~#~~floor area ratio# of Section 24-11 (Maximum Floor Area Ratio and Percentage of Lot Coverage) to apply to all such #uses#, provided that the following findings are made:

(a) that the distribution of ~~the~~ #bulk# ~~of the total #development#~~ on the #zoning lot# will not unduly obstruct the access of light and air in and to adjoining properties or public #streets#, and will result in satisfactory site planning and satisfactory urban design relationships of #buildings# to adjacent #streets# and surrounding ~~#developments#~~ area;

(b) that the architectural and landscaping treatment and the height of the proposed #building# containing such #uses# blends harmoniously with the topography and the surrounding area;

(c) that the proposed ~~#development#~~ facility will not require any significant additions to the supporting services of the neighborhood or that provision for adequate supporting services has been made; and

(d) that the #streets# providing access to such #use# are adequate to handle the traffic generated thereby or provision has been made to handle such traffic.

* * *

74-902
Certain community facility uses in R3 to R9 Districts and certain Commercial Districts

In R3, R4, R5, R6, R7, R8 and R9 Districts, and in all #Commercial Districts# except C7 or C8 Districts, the City Planning Commission may permit the allowable community facility #floor area ratio# of Section 24-11 (Maximum Floor Area Ratio and Percentage of Lot Coverage) to apply to any #development#, #extension# or #enlargement#, or change of #use# involving nursing homes, health-related facilities, sanitariums or philanthropic or non-profit institutions as listed in Use Group 3, each of which have secured certification by the appropriate governmental agency; and in R3, R4, R5, R6 and R7 Districts and in #Commercial Districts# with the equivalent #residential floor area ratio#, the Commission may permit the allowable #floor area ratio# of Section 23-147 (For non-profit residences for the elderly) to apply to domiciliary homes for adults which have secured certification by the appropriate governmental agency, provided the following findings are made:

(a) that the distribution of ~~the~~ #bulk# ~~of the total #development#~~ on the #zoning lot# will not unduly obstruct the access of light and air to adjoining properties or public #streets#, and will result in satisfactory site planning and satisfactory urban design relationships of #buildings# to adjacent #streets# and surrounding ~~#developments#~~ area;

(b) that the proposed ~~#development#~~ facility will not require any significant additions to the supporting services of the neighborhood or that provision for adequate supporting services has been made; and

* * *

~~**74-903**~~
~~**Designation of Community Districts in which special permits are required for certain community facility uses**~~

~~The special permit provisions of Section 74-90* shall apply to all nursing homes and health-related facilities within the boundaries of Community Districts 7, 8, 11 and 12 in The Bronx; Community Districts 2, 6, 8, 11, 12, 13, 14, 15 and 17 in Brooklyn; Community Districts 4, 7, 8, 11 and 12 in Manhattan; Community Districts 4, 7, 8, 12 and 14 in Queens; and Community Districts 1 and 2 in Staten Island, where the findings of Section 22-13 have been made.~~

~~*~~ ~~The applicability of Section 74-90 to any community district is determined, pursuant to Section 22-13, at the time an application is filed.~~

~~**74-904**~~ **74-903**
Special permits for domiciliary care facilities for adults

In all #Residence# and #Commercial Districts#, except C7 and C8 Districts, the City Planning Commission may permit the #development#, #extension# or #enlargement#, or change of #use# involving domiciliary care facilities for adults, provided that the Commission finds:

(a) that there is a program for residents including a maintenance and security plan for the facility;

(b) that there is a plan designating #open space# recreation areas for the use of the residents of the facility;

(c) that the architectural landscaping treatment and the height of the proposed #building# containing such #uses# blends harmoniously with the topography of the surrounding area;

(d) that the proposed facilities will not require any significant additions to the supporting services of the neighborhood or that provision for adequate supporting services has been made;

(e) that the #streets# providing access to such #use# are adequate to handle the traffic generated thereby or provision has been made to handle such traffic; and

(f) that in R1 and R2 Districts, such facilities are not proprietary domiciliary care facilities for adults.

The Commission may prescribe appropriate conditions or safeguards to minimize the adverse effect of any #use# permitted under this Section on the character of the surrounding area.

Where such #use# is authorized by the Commission, it may be eligible for #bulk# modification, pursuant to the provisions of Section 74-902 (Certain community facility uses in R3 to R9 Districts and certain Commercial Districts).

* * *

74-91
Modification of Public Plazas

In all districts, the City Planning Commission may permit modification of the provisions of

Section 37-70 (PUBLIC PLAZAS) affecting the eligibility of #public plazas# for bonus #floor area#, provided that such modification shall not include any modification of Sections 23-15 (Maximum Floor Area Ratio in R10 Districts), 24-14 or 33-13 (Floor Area Bonus for a Public Plaza).

Any modification shall be conditioned upon the Commission finding that the usefulness and attractiveness of the #public plaza# will be assured by the proposed layout and design and that ~~the #development# as a whole will produce~~ such modifications will result in a superior urban design relationship with surrounding #buildings# and open areas ~~#open spaces#~~.

The Commission may prescribe appropriate conditions and controls to enhance the relationship of such #public plazas# to surrounding ~~development~~ #buildings# and open areas.

74-92
Use Groups 3A and 4A Community Facilities and Certain Large Retail Establishments in Manufacturing Districts

74-921
Use Groups 3A and 4A community facilities

(a) Use modifications for Use Groups 3A and 4A in M1 Districts

In M1 Districts, except for houses of worship and ambulatory diagnostic or treatment health care facilities, the City Planning Commission may permit #uses# listed in Use Group 4A - Community Facilities and, in M1-5 Districts, except in M1-5A, M1-5B and M1-5M Districts, the Commission may permit museums and non-commercial art galleries as listed in Use Group 3A, provided that such #community facility# is located not more than 400 feet from the boundary of a district where such facility is permitted as-of-right and the Commission finds that:

* * *

(5) for a Use Group 4A #use#, within the neighborhood primarily to be served by the #community facility#, there is no practical possibility of obtaining a site of adequate size located in a district where it is permitted as-of-right because appropriate sites in such districts are occupied by substantial improvements; and

* * *

(b) Bulk modifications for museums in M1-5 Districts

For a #building# containing a museum #use# listed in Use Group 3A, in an M1-5 District, on a #zoning lot# over which the High Line (as defined in Section 98-01) passes, the Commission may modify height and setback regulations, provided that such modifications:

(1) provide a better distribution of #bulk# on the #zoning lot#;

(2) result in a better relationship of the #building# to open areas including the High Line, adjacent #streets# and surrounding ~~#developments#~~ properties;

(3) provide adequate light and air for #buildings# on the #zoning lot# and do not adversely affect adjacent #zoning lots# by unduly restricting access to light and air to surrounding #streets# and properties; and

(4) result in a ~~#development#~~ #building# containing a museum #use# that facilitates the public's use and enjoyment of the High Line.

* * *

74-93
Special Commercial or Mixed Use Developments in Commercial Districts

Within the boundaries of Community District 6, Borough of Queens, for #commercial# or #mixed use~~#~~ developments# or #enlargements# on two or more #zoning lots# in more than one #block#, which #zoning lots#, as defined in Section 12-10, each have single fee ownership or equivalent ownership arrangements for all lots comprising the #development# or #enlargement#, which are contiguous or would be contiguous but for their separation by a #street#, and located partially in a C4-2 District, partially in a C4-2F District, the City Planning Commission may permit upon application:

* * *

The Commission may impose additional conditions and safeguards to improve the quality of the #development# or #enlargement# and minimize adverse effects on the character of the surrounding area, including restrictions on permitted #commercial uses#, #signs# and location of curb cuts to ease vehicular and pedestrian circulation in the area.

* * *

74-95
Modifications of Housing Quality Special Permits

Housing Quality #developments# granted a special permit by the Board of Estimate, prior to August 14, 1987, may be started or continued pursuant to that special permit.

The City Planning Commission may, upon application, authorize modifications of special permits granted before August 14, 1987, under previous Sections 74-95 (Housing Quality Developments) and 74-97 (Special Provisions for a Housing Quality Development on a Through Lot Divided by Residence-Manufacturing District Boundaries with a Substantial Grade Differential).

* * *

In no event may the Commission grant a modification of a previously approved special permit, which would:

* * *

(e) reduce the amount of indoor and outdoor recreation space other than laundry rooms in the ~~#development#~~ #building#;

* * *

Article VII
Chapter 7
Special Provisions for Zoning Lots Divided by District Boundaries

* * *

77-02
Zoning Lots Not Existing Prior to Effective Date or Amendment of Resolution

~~Except as set forth in Section 77-22, paragraph (a), w~~Whenever a #zoning lot# is divided by a boundary between two or more districts and such #zoning lot# did not exist on December 15, 1961, or any applicable subsequent amendment thereto, each portion of such #zoning lot# shall be regulated by all the provisions applicable to the district in which such portion of the #zoning lot# is located. However, the provisions of paragraph (a) of Section 77-22 (Floor Area Ratio) and Section 77-40 (SUPPLEMENTAL REGULATIONS) shall apply to #zoning lots# created at any time, where different #bulk# regulations apply to different portions of such #zoning lot#.

* * *

77-22
Floor Area Ratio

The maximum #floor area ratio# permitted on each portion of such #zoning lot# for the applicable type of #building# or #buildings# on such #zoning lot# shall be determined under the applicable regulations of Articles II, III and IV. ~~the Chapters indicated:~~

~~District~~	~~Type of #Use#~~	~~Article~~	~~Chapter~~
~~#Residence#~~	~~#Residential#~~	~~II~~	~~3~~
~~#Residence#~~	~~#Community Facility#~~	~~II~~	4
~~#Commercial#~~	~~#Commercial#~~	~~III~~	~~3~~
~~#Commercial#~~	~~#Community Facility#~~	~~III~~	~~3~~
~~#Commercial#~~	~~#Residential#~~	~~III~~	4
~~#Commercial#~~	~~Mixed (#Residential# with #Commercial# or with #Community Facility#)~~	~~III~~	~~5~~
~~#Manufacturing#~~	~~#Manufacturing#~~	~~IV~~	~~3~~
~~#Manufacturing#~~	~~#Commercial#~~	~~IV~~	~~3~~
~~#Manufacturing#~~	~~#Community Facility#~~	~~IV~~	~~3~~

Each such #floor area ratio# shall be multiplied by the percentage of the #zoning lot# to which such #floor area ratio# applies. The sum of the products thus obtained shall be the adjusted maximum #floor area ratio# applicable to such #zoning lot#.

In applying this provision, the #floor area# bonus permitted for #publicly accessible open areas# or #arcades#, under the applicable regulations of this Resolution, shall apply only to such #publicly accessible open areas#, #arcades# or portions thereof, as are located in a district in which such bonus is granted.

When a ~~#building#~~ #zoning lot# (with a #height factor# greater than 21) does not have a specified maximum #floor area ratio#, for the purpose of computing the adjusted maximum #floor area ratio# ~~of a #zoning lot#~~, the #floor area ratio# of such ~~#building#~~ #zoning lot# shall be deemed to be that which can be achieved at the minimum required #open space ratio# for such ~~#building#~~ #zoning lot#.

The #floor area# resulting from application of the adjusted maximum #floor area ratio# may be

located anywhere on the #zoning lot#, subject to all other regulations of this Resolution, and provided that the #floor area ratio# for any portion of the #zoning lot# within one district shall not exceed the maximum #floor area ratio#, by #height factor#, if applicable, specified for that district, or the adjusted maximum #floor area ratio# for the #zoning lot#, whichever is greater, except as follows ~~provided in the following provisions~~:

(a) ~~For #residential developments# or #enlargements# in~~ In R3-2 Districts, R4 Districts, except R4A, R4-1 and R4B Districts, R5 Districts, and equivalent #Commercial Districts#, and for ~~#developments#, or #enlargements# where permitted, pursuant to the~~ #Quality Housing buildings# ~~Program~~ in R6, R7 and R8 Districts and equivalent #Commercial Districts# outside the #Manhattan Core#, the #residential floor area ratio# of that portion of the #zoning lot# fronting on and within 100 feet of a #wide street# and permitting the greater maximum permitted #residential floor area ratio# may exceed the maximum permitted #residential floor area ratio# for the portion of the #zoning lot# by up to 20 percent, provided that the maximum #residential floor area ratio# for the #zoning lot# does not exceed the adjusted maximum #residential floor area ratio# applicable to such #zoning lot#.

(b) For portions of #zoning lots# within an R2X, R3-1, R3A, R3X, R4-1, R4A or R4B District not subject to the provisions of Section 77-11 (Conditions for Application of Use Regulations to Entire Zoning Lot), the #floor area ratio# for such portion of the #zoning lot# shall not exceed the maximum #floor area ratio# specified for that district.

77-23
Open Space Ratio

The #open space# required for ~~the #building# or #buildings# on~~ such #zoning lot# shall be computed separately for each portion of the #zoning lot# under the applicable regulations of the Chapters indicated below. The total #open space# provided on the #zoning lot# shall not be less than the sum of such required #open space# so computed.

For portions of the #zoning lot# located in districts that have required #open space ratios#, the required #open space# for each such portion is computed by multiplying the #lot area# of that portion, by the maximum #floor area ratio# permitted for the applicable type of #building# or #buildings#, by the minimum #open space ratio# required at that #floor area ratio#, divided by 100.

For portions of the #zoning lot# located in other districts that do not have required #open space ratios# but do have required #open space#, the required #open space# for each such portion is computed by multiplying the #lot area# of that portion, by the minimum percentage of #open space# required, divided by 100.

For portions of the #zoning lot# located in districts that do not have a required #open space ratio# or required #open space#, no #open space# shall be required but any required #yards#, or #publicly accessible open area# provided, for which a #floor area# or #lot area# bonus is taken, shall be in addition to the amount of #open space# required on the remaining portion of the #zoning lot#. No open area may be counted twice in fulfilling these requirements.

The required #open space# may be located anywhere on the #zoning lot# subject to all other regulations of this Resolution and provided that the #open space ratio# for any portion of the #zoning lot# within one district shall not be less than 60 percent of the required #open space ratio# for that district.

~~#Open space ratio# regulations applying to the various districts are set forth in the Chapters indicated:~~

~~District~~	~~Type of #Use#~~	~~Article~~	~~Chapter~~
~~#Residence#~~	~~#Residential#~~	~~II~~	~~3~~

~~#Residence#~~	~~#Community Facility#~~	~~II~~	4
~~#Commercial#~~	~~#Residential#~~	~~III~~	4
~~#Commercial#~~	~~Mixed (#Residential# with #Commercial# or with #Community Facility#)~~	~~III~~	~~5~~

77-24
Lot Coverage

The maximum percent of #lot coverage# permitted on each portion of a #zoning lot# shall be determined under the applicable regulations of Article II, Chapters 3 and 4.

Each such maximum percent of #lot coverage# shall be multiplied by the #lot area# of the portion of the #zoning lot# to which such percent of #lot coverage# applies. The sum of the areas of #lot coverage# thus obtained shall be the maximum area of #lot coverage# for the #zoning lot#. Such maximum area of #lot coverage#, divided by the #lot area# of the #zoning lot#, shall be the adjusted maximum percent of #lot coverage# for the #zoning lot#.

A #building# whose #lot coverage# does not exceed the adjusted maximum percentage of #lot coverage# may be located anywhere on such #zoning lot# or portion of such #zoning lot#, subject to all other regulations of this Resolution, and provided that the percentage of #lot coverage# for any portion of the #zoning lot# within one district shall not exceed the maximum percentage of #lot coverage# specified for that district, or the adjusted maximum percentage of #lot coverage# for the #zoning lot#, whichever is greater.

If a #zoning lot# divided by a boundary between two or more districts is partly a #corner lot# and partly an #interior lot# or #through lot#, separate adjusted maximum percentages of #lot coverage# shall be computed for such #corner lot# and for such #interior lot# or #through lot# and applied separately to such #corner lot# and to such #interior lot# or #through lot#, as though each were a separate #zoning lot#. The provisions of this paragraph shall not apply to #zoning lots# located on #waterfront blocks#.

If a #zoning lot# is partly in a district in which there is no maximum permitted percentage of #lot coverage# for the #use#, the provisions of this Section shall apply to such portions of the #zoning lot# as are in a district with a maximum #lot coverage# requirement.

In R2X, R3, R4 or R5 Districts for #residential# portions of #buildings#, each portion of the #zoning lot# shall be governed by the #lot coverage# regulations specified for the district in which it is located as set forth in Article II, Chapter 3.

Wherever a #zoning lot# is divided by a district boundary in which one portion of the #zoning lot# is located in a district having a #lot coverage# requirement and the other portion is located in a district having an #open space ratio# requirement, the required #open space# for the portion having the #open space ratio# requirement shall be computed in accordance with Section 77-23 (Open Space Ratio). The inverse of such required #open space# shall be the maximum #lot coverage# permitted on that portion of the #zoning lot#, and may be located anywhere on the #zoning lot# subject to all other regulations of this Resolution.

77-25
Density Requirements

Whenever a #zoning lot# is divided by a boundary between districts with different density requirements, the maximum number of #dwelling units# or #rooming units# permitted on the #zoning lot# shall equal the sum of the maximum number of #dwelling units# or #rooming units# permitted for each portion of the #zoning lot# in accordance with the applicable district regulations. Such #dwelling units# or #rooming units# may be located wherever a #building# is permitted on the #zoning lot#. However, for portions of #zoning lots# in R1, R2, R3-1, R3A,

R3X, R4-1, R4A, R4B or R5A Districts, no more than one or two #dwelling units# may be provided, as applicable ~~the provisions of this Section shall not apply within any R2X, R3-1, R3A, R3X, R4-1, R4A or R4B District~~.

77-26
Minimum Lot Area and Lot Width Requirements for Residences

The minimum #lot area# and #lot width# regulation applying to the district with the more restrictive regulations shall apply to the entire #zoning lot#.

~~The applicable regulations are set forth in the Chapters indicated:~~

~~District~~	~~Type of #Use#~~	~~Article~~	~~Chapter~~
~~#Residence#~~	~~#Residential#~~	~~II~~	~~3~~
~~#Residence#~~	~~#Community Facility#~~	~~II~~	~~4~~
~~#Commercial#~~	~~Mixed (#Residential# with #Commercial# or with #Community Facility#)~~	~~III~~	~~5~~

77-27
Yard Regulations

Each portion of the #zoning lot# shall be governed by the #yard# regulations specified for the district in which it is located.

~~The applicable #yard# regulations are set forth in the Chapters indicated:~~

~~District~~	~~Type of #Use#~~	~~Article~~	~~Chapter~~
~~#Residence#~~	~~#Residential#~~	~~II~~	~~3~~
~~#Residence#~~	~~#Community Facility#~~	~~II~~	~~4~~
~~#Commercial#~~	~~#Commercial#~~	~~III~~	~~3~~
~~#Commercial#~~	~~#Community Facility#~~	~~III~~	~~3~~
~~#Commercial#~~	~~#Residential#~~	~~III~~	~~4~~
~~#Commercial#~~	~~Mixed (#Residential# with #Commercial# or with #Community Facility#)~~	~~III~~	~~5~~
~~#Manufacturing#~~	~~#Manufacturing#~~	~~IV~~	~~3~~
~~#Manufacturing#~~	~~#Commercial#~~	~~IV~~	~~3~~
~~#Manufacturing#~~	~~#Community Facility#~~	~~IV~~	~~3~~

77-28
Height and Setback Regulations

For #zoning lots# divided by district boundaries in which all applicable height and setback regulations include the use of #sky exposure planes#, the height and setback regulations of each #street# frontage of the #zoning lot# shall be determined by multiplying the quantitative requirements set forth in the regulations of the Chapters~~, as indicated in the following table,~~ which are applicable to each portion of such #street# frontage, by the percentage of such #street# frontage to which such regulations apply. The sum of the products obtained shall be the

controlling requirements for the #zoning lot#.

In determining the percentage of such #street# frontage, the percentage shall be based on the total frontage of the #zoning lot# along such #street#.

However, if any portion of such #zoning lot# is located within a #Limited Height District#, the provisions of Sections 23-691, 24-591, 33-491 or 43-49 (Limited Height Districts) shall apply to such portion of the #zoning lot#.

~~Height and setback regulations applying to the various districts are set forth in the Chapters indicated:~~

~~District~~	~~Type of #Use#~~	~~Article~~	~~Chapter~~
~~#Residence#~~	~~#Residential#~~	~~II~~	~~3~~
~~#Residence#~~	~~#Community Facility#~~	~~II~~	~~4~~
~~#Commercial#~~	~~#Commercial#~~	~~III~~	~~3~~
~~#Commercial#~~	~~#Community Facility#~~	~~III~~	~~3~~
~~#Commercial#~~	~~#Residential#~~	~~III~~	~~4~~
~~#Commercial#~~	~~Mixed (#Residential# with #Commercial# or with #Community Facility#)~~	~~III~~	~~5~~
~~#Manufacturing#~~	~~#Manufacturing#~~	~~IV~~	~~3~~
~~#Manufacturing#~~	~~#Commercial#~~	~~IV~~	~~3~~
~~#Manufacturing#~~	~~#Community Facility#~~	~~IV~~	~~3~~

For all other #zoning lots#, each portion of such #zoning lot# shall be regulated by the height and setback provisions applicable to the district in which such portion of the #zoning lot# is located.

In R2X, R3, R4 or R5 Districts, for #residential# portions of #buildings#, each portion of the #zoning lot# shall be governed by the height and setback regulations specified for the district in which it is located, as set forth in Article II, Chapter 3.

For the purposes of defining a #building# envelope pursuant to paragraph (b) of Section 23-631 (Height and setback in R1, R2, R3, R4 and R5 Districts), apex points may be located on a zoning district boundary which divides a #building#.

Furthermore, if any portion of a #zoning lot# is located in an R2X, R3, R4, R4A or R4-1 District, the height and setback regulations specified for such district may apply to the entire #zoning lot# provided that such district comprises more than 50 percent of such #zoning lot#, and the greatest distance from the mapped district boundary to any #lot line# of such #zoning lot# in the district in which less than 50 percent of its area is located does not exceed 25 feet. Such distance shall be measured perpendicular to the mapped district boundary.

77-29
Tower Regulations

If 50 percent or more of a #zoning lot# is located within a district to which the provisions of Sections 23-65, 24-54, 33-45 or 43-45 (Tower Regulations) apply, and the remaining portion of the #zoning lot# is within a district to which such provisions do not apply, any #building# or portion thereof which, in the aggregate, occupies not more than 40 percent or, on small lots, the percentage set forth in Sections ~~23-651, 24-541,~~ 23-65, 24-54, 33-454 or 43-451 (Towers on small lots) of the #lot area# of the entire #zoning lot# (which #building# or portion thereof is hereinafter referred to as a tower) may penetrate any applicable established #sky exposure

plane#, provided that such tower shall comply with the applicable setback requirements or restrictions on aggregate area that may be occupied within 50 feet of a #narrow street# or 40 feet of a #wide street#, as set forth in Sections 23-65, 24-54, 33-45 or 43-45.

If 50 percent or more of a #zoning lot# is located in a district in which the provisions of Sections 33-455 (Alternate regulations for towers on lots bounded by two or more streets), 33-456 (Alternate setback regulations on lots bounded by two or more streets) or 33-457 (Tower setbacks on narrow blocks) apply, and the remaining portion of the #zoning lot# is within a district in which such provisions do not apply, any #building# or any tower that occupies not more than the applicable percent of the #lot area# of a #zoning lot# as set forth in Section 33-455 or 33-456 and which complies with the applicable setback requirements as set forth in Sections 33-455, 33-456 or 33-457 may penetrate any applicable established #sky exposure plane#.

Subject to the requirements set forth hereinbefore and those specified in Sections 77-22 (Floor Area Ratio) and 77-23 (Open Space Ratio), such tower may be located anywhere on such #zoning lot#.

~~Tower regulations applying to the various districts are set forth in the Chapters indicated:~~

~~District~~	~~Type of #Use#~~	~~Article~~	~~Chapter~~
~~#Residence#~~	~~#Residential#~~	~~II~~	~~3~~
~~#Residence#~~	~~#Community Facility#~~	~~II~~	~~4~~
~~#Commercial#~~	~~#Commercial#~~	~~III~~	~~3~~
~~#Commercial#~~	~~#Community Facility#~~	~~III~~	~~3~~
~~#Commercial#~~	~~#Residential#~~	~~III~~	~~4~~
~~#Commercial#~~	~~Mixed (#Residential# with #Commercial# or with #Community Facility#)~~	~~III~~	~~5~~
~~#Manufacturing#~~	~~#Manufacturing#~~	~~IV~~	~~3~~
~~#Manufacturing#~~	~~#Commercial#~~	~~IV~~	~~3~~
~~#Manufacturing#~~	~~#Community Facility#~~	~~IV~~	~~3~~

* * *

77-321
Provisions governing off-street parking for residences

The percentage requirements for #accessory# off-street parking for #residences# applicable to each portion of the #zoning lot# shall be multiplied by the percentage of the total #lot area# of the #zoning lot# to which each such requirement applies. The sum of the products obtained shall be the percentage requirement applicable to #residences# on such #zoning lot#. Such off-street parking spaces may be located anywhere on the #zoning lot# without regard to district boundaries, provided that such spaces shall conform to all the other applicable provisions of this Resolution.

~~The regulations governing off-street parking for #residences# are set forth in the Chapters indicated:~~

~~District~~	~~Type of #Use#~~	~~Article~~	~~Chapter~~
~~#Residence#~~	~~#Residential#~~	~~II~~	~~5~~
~~#Commercial#~~	~~#Residential#~~	~~III~~	~~6~~

77-322
Provisions governing off-street parking for non-residential uses

For non-#residential uses#, the requirements for #accessory# off-street parking or loading of that district in which more than 50 percent of the total area of the #zoning lot# is located, shall apply to the entire #zoning lot#. The parking spaces or loading berths may be located anywhere on the #zoning lot# without regard to district boundaries, provided that such spaces or berths shall conform to all other applicable regulations of this Resolution.

~~The regulations governing off-street parking and loading are set forth in the Chapters indicated:~~

~~District~~	~~Type of #Use#~~	~~Article~~	~~Chapter~~
~~#Residence#~~	~~Non-#residential#~~	~~II~~	~~5~~
~~#Commercial#~~	~~Non-#residential#~~	~~III~~	~~6~~
~~#Manufacturing#~~	~~Non-#residential#~~	~~IV~~	4

* * *

Article VII
Chapter 8
Special Regulations Applying to Large-Scale Residential Developments

* * *

78-02
Definitions

Words in italics are defined in Section 12-10 or, if applicable exclusively to this Chapter, in this Section.

Floor area

For the purposes of this Chapter, in R3, R4 or R5 Districts, #floor area# shall be as defined in Section 12-10, except that:

(a) #floor area# shall not include up to 200 square feet of floor space located in any #story# used for required #accessory# off-street parking spaces within individual garages; and

(b) within the definition of #floor area# in Section 12-10, listed under "#floor area# includes," paragraph (i)(3) shall not apply, and listed under "#floor area# of a #building# shall not include," paragraph (6)(ii) shall not apply.

78-03
Applicability of this Chapter

#Large-scale residential developments# are governed by all the #use#, #bulk#, off-street parking and loading, and other applicable regulations of this Resolution, except for such special provisions as are specifically set forth in this Chapter and apply only to such #large-scale residential developments#. However, the Quality Housing Program is inapplicable in a #large-scale residential development#.

* * *

78-043
Requirements for findings

The requirements for findings as set forth in this Chapter shall constitute a condition precedent to the grant of any such modification by special permit or otherwise. ~~The decision or determination of the City Planning Commission shall set forth each required finding in each grant of modification by special permit or otherwise.~~ The decision or determination of the City Planning Commission shall set forth each required finding in each grant of modifications for a #large-scale residential development#. Each finding shall be supported by substantial evidence or data considered by the Commission in reaching its final decision.

* * *

78-05
Requirements for Applications

An application to the City Planning Commission for an authorization or special permit respecting any #large-scale residential development# shall include a site plan and related schedules showing the location and proposed #use# of all #buildings or other structures# on the site, the location of existing natural features such as important trees or clusters of trees, streams or rock formations, and all information necessary to indicate the authorizations requested and their justification.

The Commission shall require, where relevant, a time schedule for carrying out the proposed #large-scale residential development#, a financial plan, a subdivision plan and, in the case of a

site plan providing for common #open space# or common parking areas, a maintenance plan for such space or areas and surety for continued availability of such space or areas to the people they are intended to serve.

78-06
Ownership

(a) Except as otherwise provided in this Section, any #large-scale residential development# for which application is made for an authorization or special permit or modification thereto, in accordance with the provisions of this Chapter, shall be on a tract of land that at the time of application is all under the control of the applicant(s) as the owner(s) or holder(s) of a written option to purchase. Except as otherwise provided in this Section, no authorization or special permit or modification thereto, shall be granted for such #large-scale residential development# unless the applicant(s) acquired actual ownership (single fee ownership or alternate ownership arrangements according to the #zoning lot# definition in Section 12-10 for all #zoning lots# comprising the #large-scale residential development#) of, or executed a binding sales contract for, all of the property comprising such tract.

(b) Notwithstanding the provisions of paragraph (a) of this Section, the following actions shall be permitted:

(1) When a #large-scale residential development# is part or all of a designated urban renewal project, the City's urban renewal agency, or a person authorized by such agency, may make application for and may be granted authorizations or special permits under the provisions of this Chapter, even though such #large-scale residential development# does not meet the ownership requirements set forth in paragraph (a) of this Section. All parcels comprising such #large-scale residential development# shall be within the designated urban renewal area and subject to the urban renewal controls set forth in the approved urban renewal plan.

* * *

(3) The owner(s) of a developed parcel(s) within a #large-scale residential development# located in a former urban renewal area listed in paragraph (b)(2), where at least 50 percent of such parcel(s) is located within a C1-9 or C2-8 District, may make application for, and may be granted, modifications of authorizations or special permits previously granted under the provisions of this Chapter, in order to utilize available #floor area# for #commercial# or #community facility uses#, subject to the conditions of paragraph (b)(5) of this Section and provided further that:

* * *

(v) required #open space# with appropriate circulation, seating, lighting and plantings shall be accessible and usable by all residents of the #large-scale residential development#;

(vi) a plan, including elevations, shall be submitted showing the proposed #building(s)# and modification, and #open space#; and

(vii) the #enlargement# enhances the streetscape and the design promotes a harmonious relationship with the existing #~~development~~ buildings# and contiguous blocks within the #large-scale residential development#.

* * *

78-111
Report by Planning Commission

Within one month after a request from the Chair of the City Planning Commission ~~Commissioner of Buildings~~, the Department of City Planning ~~Commission~~ shall make a report, based upon information from the ~~Board~~ Department of Education and other appropriate City Departments, on the anticipated effect of the proposed #large-scale residential development# on the existing capacity of public #schools# or other public facilities serving the area in which the proposed #large-scale residential development# is to be located.

78-112
If no additional public facilities needed

If the Department of City Planning ~~Commission~~ reports that the proposed #large-scale residential development# will not require any significant addition to the public facilities serving the neighborhood, then the requirements of this Section shall be considered to be satisfied.

78-113
If additional public facilities needed

If the ~~Commission~~ Department of City Planning reports that the proposed #large-scale residential development# can be expected to create a need for one or more new public facilities in the neighborhood, the City Planning Commission may, in its discretion, recommend that a site for one or more such facilities should be reserved within the site of such proposed #large-scale residential development#. If the Commission does so recommend, the issuance of a building permit shall be withheld for a period not to exceed three months. In such a case, the requirements of this Section shall be considered to be satisfied:

* * *

78-22
Accessory Uses in Large-Scale Residential Developments

A #large-scale residential development# in a #Residence District# may contain as #accessory uses#, any #commercial uses# listed in Use Group 6A or 6F which in the aggregate occupy not more than two percent of the total #floor area# in the #large-scale residential development#, and of which no single establishment occupies more than 15,000 square feet of #floor area#, provided that upon a review of the site plan, the City Planning Commission finds that such #commercial uses#:

(a) will be primarily for the use of the residents of the #large-scale residential development# and will provide more convenient shopping for such residents;

(b) are so located as to minimize interference with #residential# or recreational areas within the #large-scale residential development# and to avoid creation of traffic congestion or other objectionable influences affecting #residences# outside the #large-scale residential development#;

* * *

78-23
Other Accessory Uses

78-231
Accessory swimming pools

Swimming pools may be authorized by the City Planning Commission as #accessory uses# even though not located on the same #zoning lots# as the principal #uses# to which they are related, provided that:

* * *

(c) the edge of such swimming pool is located not less than 50 feet from any #lot line# on the periphery of the #large-scale residential development#, and is suitably screened from other areas on the same or adjacent #zoning lots#; and

(d) such swimming pool complies in all other respects with the definition of #accessory use# as set forth in Section 12-10 (DEFINITIONS).

* * *

78-24
Special Permits ~~Authorizations~~

78-241
Waterfront and related commercial uses

For any #large-scale residential development#, in a C4 District, the City Planning Commission may, by special permit modify applicable district regulations to allow ~~certain boating and related~~ #uses# listed in Use Group 14A, not otherwise allowed in such district, provided that:

(a) the #uses# are appropriate for the location and blend harmoniously with the rest of the #large-scale residential development#; and

(b) the #streets# providing access to such #uses# will be adequate to handle the traffic generated thereby.

The Commission may prescribe appropriate conditions and safeguards to minimize adverse effects on the character of the #large-scale residential development#.

78-242
Location of commercial uses

For any #large-scale residential development#, the City Planning Commission, by special permit, may ~~authorize~~ allow #residential# and non-#residential uses# to be arranged within a #building# without regard for the regulations set forth in Section 32-42 (Location within Buildings) when terracing is required because of unusual topographic conditions in a #large-scale residential development# having a minimum area of 20 acres.

78-30
BULK REGULATIONS

78-31
Location of Buildings, Distribution of Bulk and Open Space and Modification of Height and Setbacks

(a) General provisions

For the purposes of this Section, the term "periphery" shall mean any #street line# bounding a #large-scale residential development# or any #lot line# abutting a #zoning lot# that is not part of the #large-scale residential development#. The term "wholly within" shall therefore mean any area of the #large-scale residential development# which is not within the area designated as "periphery." However, in R3-2 Districts, R4 Districts except R4A, R4-1 and R4B Districts, or R5 Districts except R5B Districts, the

"periphery" shall also include all portions of a #large-scale residential development# within 100 feet of a peripheral #street line# or within 30 feet of any other peripheral #lot line# except for portions directly opposite:

(1) ~~a tract of land~~ an area of at least 1.5 acres in a #Residence District# that is either vacant or #land with minor improvements#; or

(2) a #large-scale residential development developed# pursuant to the provisions of paragraph (b) of this Section; or

(3) a #Commercial# or a #Manufacturing District#.

All ~~#development#~~ #buildings or other structures# in the periphery of a #large-scale residential development# shall comply with the height and setback regulations of Article II, Chapter 3 except as otherwise provided in this Section.

Special provisions applying to #large-scale residential developments# in R3, R4 or R5 Districts are set forth in paragraphs (b) and (c) of this Section. The provisions of paragraph (b) shall apply to any #large-scale residential development# in R3-2 Districts, R4 Districts except R4A, R4-1 and R4B Districts, or R5 Districts except R5B Districts. The provisions of paragraph (c) shall apply only to #large-scale residential developments# in all R3, R4 or R5 Districts that utilize the bonus provisions of Section 78-32 through 78-35, inclusive.

(b) Alternate height and setback regulations for certain districts

In R3-2 Districts, R4 Districts except R4A, R4-1 and R4B Districts, or R5 Districts except R5B Districts, ~~#development#~~ #buildings or other structures#, or portions thereof wholly within a #large-scale residential development# may use the alternate height and setback regulations set forth in paragraphs (b)(1) through (b)(3) of this Section.

(1) In R3-2 Districts, the height and setback regulations applicable to R4 Districts, except R4A and R4B Districts, may be used.

(2) In R4 Districts, no portion of any #building or other structure# including the apex of a roof shall penetrate a plane 35 feet in height above the #base plane#.

(3) In R5 Districts, no portion of any #building or other structure# including the apex of a pitched roof shall penetrate a plane 40 feet in height above the #base plane#.

* * *

(e) In R9, R10, C1-8, C1-9, C2-7 or C2-8 Districts, or in C1 or C2 Districts mapped within R9 or R10 Districts, #floor area# bonuses for #public plazas# or #arcades# permitted in accordance with the applicable district regulations shall apply only to a #development# or #enlargement# with 25 percent or less of ~~its~~ the total #floor area# of the #building# in #residential use#.

78-311
Authorizations by the City Planning Commission

When a #large-scale residential development# includes, or will include after subdivision, two or more #zoning lots#, the City Planning Commission may authorize:

(a) the total #floor area#, #lot coverage#, #dwelling units# or #rooming units# permitted by the applicable district regulations for all #zoning lots# within the #large-scale residential development# to be distributed without regard for #zoning lot lines#;

(b) the total #open space# required by the applicable district regulations for all #zoning lots#

within the #large-scale residential development# to be distributed without regard for #zoning lot lines#, except that where subdivision is authorized in accordance with the provisions of Section 78-51 (General Provisions), the Commission, in authorizing such distribution may allow reductions in the minimum required #open space# on individual #zoning lots# only where adequate provision is made for common #open space# to serve such lots.

If the required #open space# on the roof of a #community facility building# has an equivalent access arrangement acceptable to the Commission, it may authorize modification of requirements set forth in paragraph ~~(c)~~ (b) of the #open space# definition in Section 12-10;

* * *

(d) the location of #buildings# without regard for #yard# regulations which would otherwise apply along portions of #streets# or #lot lines# wholly within the #large-scale residential development# provided that any #building# for which required #rear# or #side yards# are reduced shall be separated from all other #buildings# with which it does not share a party wall, on the same or adjacent #zoning lots#, by a distance consistent with the provisions of Section 23-71 or, in cases where at least one of the #buildings# is a single-family or two-family #detached# or #semi-detached# house, rowhouse or series of rowhouses, by a lesser distance to be determined by the Commission, where the location of the #buildings# will not be detrimental to the privacy of the occupants of the #buildings# on the #block#;

(e) the location of #buildings# without regard for the height and setback regulations which would otherwise apply along portions of #streets# wholly within the #large-scale residential development# or along #side# or #rear lot lines# abutting other #zoning lots# within the #large-scale residential development#, provided that any #building# for which required rear or side setbacks are reduced shall be separated from all other #buildings# with which it does not share a party wall, on the same or adjacent #zoning lots#, by a distance consistent with the provisions of Section 23-71;

(f) the location of primary business entrances, #show windows# or #signs# along frontages which are adjacent only to other #zoning lots# within the #large-scale residential development#, without regard to restrictions applicable near #Residence District# boundaries, for the purpose of achieving better site planning and community planning;

(g) special directional #signs# and their location and design within a #large-scale residential development# comprising an area of at least five acres provided that their construction would result in better pedestrian and vehicular circulation. The Commission shall in each case give due consideration to the effect of such #signs# on the surrounding ~~#residential development#~~ residential area and may impose appropriate conditions and safeguards;

(h) the location of #buildings# on a single #zoning lot# without regard for spacing between #buildings#, provided that the resultant spacing will not be reduced beyond an amount considered appropriate by the Commission and in no case by more than 15 percent of that required by Section 23-71.

~~In the case of a #large-scale residential development#, f~~For that portion of ~~the~~ a #large-scale residential development# ~~which is~~ located in an ~~R5 or~~ R6 District, the Commission may authorize the permitted #floor area ratio# and required #open space ratio# to be determined on the basis of a #height factor# which is different than the actual #height factor# of such portion of the #large-scale residential development#, for the purpose of achieving better site planning and community planning.

When subdivision is authorized in accordance with the provisions of Section 78-51 and satisfactory provision is made for common #open space#, the Commission may consider such common #open space# in determining to what extent, if any, modifications of the #yard# regulations are justified.

For any #large-scale residential development#, the City Planning Commission may, upon application, authorize in R3, R4 and R5 Districts, modifications of the height and setback regulations set forth in Section 23-631 and paragraph (b) of Section 78-31 for #buildings# wholly within the #large-scale residential development# for the purposes of introducing variety or preserving natural features or view corridors.

78-312
Special permits by the City Planning Commission

For any #large-scale residential development#, the City Planning Commission may permit:

(a) the total #floor area#, #lot coverage#, #dwelling units# or #rooming units# permitted by the applicable district regulations or by Sections 78-32 (Bonus for Good Site Plan) or 78-33 (Bonus for Common Open Space) for all #zoning lots# within the #large-scale residential development# to be distributed without regard for #zoning lot lines#;

(b) the total #open space# required by the applicable district regulations or by Sections 78-32 or 78-33 for all #zoning lots# within the #large-scale residential development# to be distributed without regard for #zoning lot lines# except that where subdivision is authorized in accordance with the provisions of Section 78-51 (General Provisions), the Commission, in authorizing such distribution may allow reductions in the minimum required #open space# on individual #zoning lots# only where adequate provision is made for common #open space# to serve such lots;

(c) minor variations in required #front# or #rear yards# on the periphery of such #large-scale residential development# for the purpose of introducing variety or preserving natural features;

(d) in R1, R2, R6, R7, R8, R9 or R10 Districts, minor variations in the front height and setback regulations on the periphery of such #large-scale residential development# for the purpose of introducing variety, preserving natural features, or providing for improved access of light and air, but within the general purpose and intent of the height and setback regulations. In R3, R4 or R5 Districts the Commission may modify the height and setback regulations set forth in Section 23-631 and paragraph (b) of Section 78-31 on the periphery of such #large-scale residential development# for the purposes of introducing variety, providing a transition in neighborhood scale between the #large-scale residential development# and surrounding #buildings#; preserving natural features or view corridors; or improving the access of light and air;

(e) variations in the location of primary business entrances, #show windows#, and #signs# along frontages adjacent to #zoning lots# outside the #large-scale residential development#, without regard to restrictions applicable near #Residence District# boundaries for the purpose of achieving better site planning and community planning. However, in no event shall the Commission allow such primary business entrances, #show windows# or #signs# to be located within 10 feet of the #Residence District# boundary; and

(f) modifications of the minimum spacing requirements consistent with the intent of the provisions of Section 23-71 (Minimum Distance between Buildings on a Single Zoning Lot) and authorize modifications of the spacing required by paragraphs (c), (d), (e) and (h) of Section 78-311 (Authorizations by the Planning Commission).

78-313
Findings

As a condition precedent to the granting of authorizations under the provisions of Section 78-311 (Authorizations by the Planning Commission) or a special permit under the provisions of Section

78-312 (Special permits by the Planning Commission), the Commission shall make the following findings:

(a) that such modifications will aid in achieving the general purposes and intent of this Chapter as set forth in Section 78-01 (General Purposes);

(b) that such distribution of #floor area#, #dwelling units#, #rooming units#, #open spaces#, locations of #buildings#, or location of primary business entrances, #show windows# or #signs# will permit better site planning and will thus benefit both the residents of the #large-scale residential development# and the City as a whole;

(c) that such distribution or location will not unduly increase the #bulk# of #buildings#, density of population, or intensity of #use# in any #block#, to the detriment of the occupants of #buildings# in the #block# or nearby #blocks#;

(d) that such distribution or location will not affect adversely any other #zoning lots# outside the #large-scale residential development#, by restricting access to light and air or by creating traffic congestion;

(e) where portions of the total required #open space# are pooled in common #open space# areas or common parking areas, that such common areas will, by location, size, shape and other physical characteristics, and by their relationship to surrounding ~~#development#~~ development and the circulation system, permit realization of the full community service of advantages for which such pooled areas are designed;

(f) where one or more #zoning lots# in the #large-scale residential development# do not abut mapped #streets#, that suitable private access to mapped #streets# will be provided conforming to standards which will insure adequate circulation and make adequate provision for public services; and

(g) the modification of height and setback will not impair the essential character of the surrounding area and will not have adverse effects upon the access to light, air and privacy of adjacent properties.

78-32
Bonus for Good Site Plan

In R1-2, R2 or R3-1 Districts, including #Commercial Districts# mapped within such #Residence Districts#, for any #large-scale residential development#, the City Planning Commission, by special permit, may allow the #open space ratio# otherwise required for the #large-scale residential development# as a whole and for individual #zoning lots# therein to be reduced by not more than 10 percent, may allow the maximum number of #dwelling units# to be increased by not more than five percent, and may allow the maximum #residential floor area ratio# to be increased by not more than 7.5 percent, if the Commission finds that throughout the #large-scale residential development# the site plan provides a significantly better arrangement of the #buildings# in relation to one another and to their sites from the standpoints of privacy, access of light, organization of private #open spaces#, and preservation of important natural features than would be possible or practical for a ~~#development#~~ development comprised of similar types built in strict compliance with the applicable district regulations.

78-33
Bonus for Common Open Space

In R3-1 Districts, including #Commercial Districts# mapped within such #Residence Districts#, for any #large-scale residential development#, the City Planning Commission, by special permit, may allow the #open space ratio# otherwise required for such #large-scale residential development# as a whole to be reduced by not more than 20 percent, may allow the maximum number of #dwelling units# to be increased by not more than 10 percent, and may allow the

maximum #residential floor area ratio# to be increased by not more than 15 percent, provided that:

(a) at least one acre or 20 percent of the total #open space#, whichever is more, is provided in common areas meeting the requirements of Section 78-52 (Common Open Space) and not used for off-street parking;

(b) the #large-scale residential development# qualifies for a bonus in accordance with the provisions of Section 78-32; and

(c) the Commission makes the findings required in Section 78-32 and in paragraph (e) of Section 78-313 (Findings).

Such authorizations shall be instead of, rather than in addition to, those which would be allowable under the provisions of Sections 78-32.

78-34
Special Permit Provisions for Certain Large-Scale Developments

In R3-2, R4 and R5 Districts, or in #Commercial Districts# in which #residential buildings# are governed by the #bulk# regulations, of such #Residence Districts#, for any #large-scale residential development#, the City Planning Commission, by special permit, may make modifications in the #open space ratio#, #residential floor area ratio# and density regulations, pursuant to the provisions of Section 78-35 (Special Bonus Provisions) if the Commission finds that:

(a) throughout the #large-scale residential development# the site plan provides a significantly better arrangement of the #buildings# in relation to one another and to their sites from the standpoints of privacy, access of light, organization of private #open spaces# and preservation of important natural features to a greater degree than would be possible or practical for a ~~#development#~~ development composed of similar types built in strict compliance with the applicable district regulations;

(b) the public facilities and utilities in the area are adequate to meet the needs of the #large-scale residential development# or that needed additional facilities will be provided as a part of the #large-scale residential development# by the developer or owner;

(c) the #large-scale residential development# complies with the provisions of Section 78-351 (Bonus for common open space and good site plan); and

(d) a #large-scale residential development# having an area of 4 acres or more complies with the provisions of Section 78-352 (Bonus for community facility space).

If the Commission determines that a proposed #large-scale residential development# containing not more than 250 #dwelling units# does not require #community facility# space, finding (d) shall be waived and the provisions of Section 78-352 made inapplicable. In making its determination, the Commission shall give due consideration to a ~~report~~ recommendation from the Community Board within which the proposed #large-scale residential development# is located.

If a site for a fire or police station is provided within the Community District in which a #large-scale residential development# is to be located, which site has been donated in fee to the City, selected as a site pursuant to Section ~~227~~ 218 of the New York City Charter (Site Selection ~~for Capital Projects~~), and, if applicable, approved under the provisions of Section 74-67 (Special Permit for Fire or Police Stations in Residence Districts), the Commission may waive finding (d), provided that the #community facility# requirements contained in Section 78-352 are determined to be unnecessary.

* * *

78-35
Special Bonus Provisions

78-351
Common open space and good site plan

The provisions of this Section shall not apply to any #zoning lot# subdivided ~~for #development#~~ to under four acres after January 1, 1972, nor to any #large-scale residential development# for which authorization has been granted by the City Planning Commission prior to July 31, 1972.

In R3-2 or R4 Districts, or in #Commercial Districts# in which #residential buildings# are governed by the #bulk# regulations of such #Residence Districts#, for any #large-scale residential development# which complies with the requirements of Section 78-34 (Special Permit Provisions for Certain Large-Scale Developments), the permitted #residential floor area ratio#, required #open space ratio# and density regulations for the #large-scale residential development# as a whole may be modified as set forth in this Section. At least 25 percent of the total required #open space# is to be provided in common areas meeting the requirements of Section 78-52 (Common Open Space). No portion of such common #open space# is to be used for driveways or off-street parking. The findings required in paragraph (e) of Section 78-313 (Findings) are to be satisfied.

* * *

78-352
Bonus for community facility space

In R3-2, R4 and R5 Districts, or in #Commercial Districts# in which #residential buildings# are governed by the #bulk# regulations of such #Residence Districts#, for any #large-scale residential development# which complies with the provisions of Section 78-34 (Special Permit Provisions for Certain Large-Scale Developments), the permitted #residential floor area ratio#, required #open space ratio#, and required ~~#lot area per room#~~ #floor area# per #dwelling unit# for the #large-scale residential development# as a whole may be modified as set forth in this Section, provided floor space for #community facility use# and/or a program for improvement and maintenance for parks not included in the City capital budget is provided as required in paragraph (b) of this Section.

* * *

(b) There shall be at least 15 square feet of #community facility# floor space for each #dwelling unit# within the #large-scale residential development# and/or a substantial park area located adjacent to or within a reasonable distance from the #large-scale residential development#. Such space shall be used for schools where the need is certified by the Board of Education and where the Board agrees to lease such space at no cost. Otherwise such space shall be allocated for one or more #uses# as specified in this Section where the need for such space has been certified by the City Planning Commission and a City Department agrees to lease such space at no cost. If such certification and agreement are not obtained in either case, the Commission shall approve any private #community facility# proposed to be rented or maintained by the developer, or the homeowners' association or other entity owning the common elements of the #large-scale residential development#. In no case shall the size of an individual #use# be less than the amount set forth in this Section.

* * *

In the case of a program for improvement and/or maintenance for parks which is eligible for a bonus pursuant to this Section, comparable improvements and maintenance costs for an equivalent amount of the required #community facility# space shall be incurred.

* * *

78-353
Bonus for enclosed parking

In R4 or R5 Districts, or in #Commercial Districts# in which #residential buildings# are governed by the #bulk# regulations of such #Residence Districts#, for any #large-scale residential development# which complies with the provisions of Section 78-34 (Special Permit Provisions for Certain Large-Scale Developments), the permitted #residential floor area ratio# may be increased over the amount earned by other provisions of Section 78-35 (Special Bonus Provisions) and the required #open space ratio# for the #large-scale residential development# as a whole correspondingly decreased as set forth in this Section provided that at least two-thirds of the required off-street parking is enclosed.

* * *

78-40
OFF-STREET PARKING REGULATIONS

78-41
Location of Accessory Parking Spaces

When a #large-scale residential development# includes, or will include after subdivision, two or more #zoning lots#, the City Planning Commission may, upon application, authorize permitted or required #accessory# off-street parking spaces or bicycle parking spaces to be located anywhere within the #large-scale residential development# without regard for #zoning lot lines#, provided that in each case the Commission shall make the following special findings:

(a) that such off-street parking spaces or bicycle parking spaces will be conveniently located in relation to the #use# or #uses# to which such spaces are #accessory#;

(b) that such location of the off-street parking spaces or bicycle parking spaces will permit better site planning and will thus benefit both the owners, occupants, employees, customers, residents or visitors of the #large-scale residential development# and the City as a whole; and

(c) that such location of the off-street parking spaces or bicycle parking spaces will not increase the number of spaces in any single #block# or the traffic drawn through any one or more of the nearby local #streets# in such measure as to affect adversely other #zoning lots# outside the #large-scale residential development# or traffic conditions in the surrounding area.

* * *

78-42
Parking Regulations for Commercial and Community Facility Uses

For #large-scale residential developments# in R3-2, R4, R5, R6, R7, R8, R9 or R10 Districts, or in #Commercial Districts# in which ~~#residential buildings#~~ #residences# are governed by the #bulk# regulations of R3-2, R4, R5, R6, R7, R8, R9 or R10 Districts, the City Planning Commission may, by special permit, waive the requirements for off-street parking spaces #accessory# to any #commercial# or #community facility use# included in such #large-scale residential development# and intended primarily for the use of its residents.

78-43
Modification for Open Space Requirements in Large-Scale Developments

For all #large-scale residential developments# in R5, R6, R7, R8 or R9 Districts, or in #Commercial Districts# in which ~~#residential buildings#~~ #residences# are governed by the

#bulk# regulations of such #Residence Districts#, the City Planning Commission may modify the requirement for #open space# as set forth in the definition of #open space# in Section 12-10 (DEFINITIONS) by allowing parking space~~,~~ on the roofs of ~~detached~~ parking garages not #abutting# another #building# and not more than 23 feet in height above #curb level#, to count as #open space# and by not requiring connections from such roofs to ground level by exterior passageways or ramps, provided that the following findings are made:

(a) that the total area occupied by driveways, private streets, or open #accessory# off-street parking spaces in all areas claimed as common or private #open space# throughout the #large-scale residential development# shall not exceed 40 percent of the total required #open space# for the #large-scale residential development#; and

(b) that such arrangement and use of #open space# results in better site planning and community planning.

78-44
Modification of Curb Cut Regulations

The City Planning Commission may, upon application, authorize modification of the requirements set forth in Section 25-631 (Location and width of curb cuts in certain districts), provided the Commission finds that the proposed location and width of curb cuts:

(a) results in a more efficient traffic circulation system;

(b) permits better site planning; and

(c) does not unduly increase the amount of traffic on nearby local streets so as to adversely affect #zoning lots# outside the #large-scale residential development#.

78-50
SUBDIVISION OF LARGE-SCALE RESIDENTIAL DEVELOPMENTS

78-51
General Provisions

A #large-scale residential development# may be subdivided before, during or after #development# into two or more #zoning lots# which may be in different ownerships, provided that either:

* * *

(c) such subdivision is made necessary by forced sale or foreclosure of a portion of such #large-scale residential development#, but can be accommodated to any authorization or special permit granted pursuant to the provisions of this Chapter.

* * *

78-52
Common Open Space

An area designated on the site ~~development~~ plan of a #large-scale residential development# as "common #open space#" and on the subdivision plan as an area to be held in separate ownership for the use and benefit of residents occupying specified #zoning lots# shown on such subdivision plan may be approved as part of such subdivision plan, provided that it meets the following requirements:

(a) it shall be conveniently accessible to all residents of #zoning lots# for which it is intended

to satisfy the #open space# requirements;

(b) it shall be made available in its improved state as set forth on the site ~~development~~ plan in accordance with an approved time schedule;

* * *

(f) it may contain only such obstructions as are specifically permitted under the provisions of Section 23-12 (Permitted Obstructions in Open Space) or minor #accessory# structures, and the total area occupied by driveways, private streets, or open #accessory# off-street parking spaces in all areas claimed as common or private #open space# throughout the #large-scale residential development# shall not exceed 50 percent of the total required #open space# for the # large-scale residential development#; and

(g) such #open space# shall include both active and passive recreation space providing a range of recreational facilities and activities appropriate to the occupants of the #large-scale residential development#. Such space shall be physically and visually accessible to the occupants and shall be screened from unsuitable areas. Passive recreation space shall be landscaped and shall be located in areas other than access and egress spaces. Active recreation facilities, such as play equipment, court game facilities, or ball fields, shall be designed to provide the maximum possible area appropriate to the size of the #large-scale residential development#.

The approval of a subdivision plan which includes common #open space# shall be conditioned upon a finding that these requirements are met.

78-53
Common Parking Areas

An area designated on the site ~~development~~ plan of a #large-scale residential development# as "common off-street parking area" and on the subdivision plan as an area to be held in separate ownership for use by the occupants or visitors of specified #zoning lots# shown on such subdivision plan may be approved as part of such subdivision plan, provided that it shall meet the following requirements:

(a) it shall be made available in its improved state as set forth in the site ~~development~~ plan in accordance with an approved time schedule;

* * *

Article VII
Chapter 9
Special Regulations Applying to Large-Scale Community Facility Developments

* * *

79-11
Applicability of this Chapter

#Large-scale community facility developments# are governed by all the #use#, #bulk#, off-street parking and loading, and other applicable regulations of this Resolution, except for such special provisions as are specifically set forth in this Chapter. Such special provisions are designed to deal with problems which arise only in connection with #large-scale community facility developments# and apply only to such #large-scale community facility developments# as set forth herein.

#Large-scale community developments# within the #waterfront area# shall be subject to the provisions of Section 62-132 (Applicability of Chapters 4, 8 & 9 of Article VII).

* * *

79-20
BULK REGULATIONS

79-21
General Provisions

When a #large-scale community facility development# includes two or more #zoning lots# which are contiguous or would be contiguous but for their separation by a #street#, the City Planning Commission may, in appropriate cases, upon application, authorize the permitted #floor area#, #lot coverage#, #dwelling units# or #rooming units#, or the required #open space# for all #zoning lots# within the #large-scale community facility development#, to be distributed without regard for #zoning lot lines#, may modify the minimum required distance between #~~residential~~ buildings# as set forth in Section 23-70 (MINIMUM REQUIRED DISTANCE BETWEEN TWO OR MORE BUILDINGS ON A SINGLE ZONING LOT), provided such reduction does not exceed 15 percent of that required by Section 23-71, may authorize the location of #buildings# without regard for #front yard# or height and setback regulation which would otherwise apply along portions of #streets# wholly within the #large-scale community facility development#, and, further, may authorize the location of #community facility buildings# without regard to #side# or #rear yard# regulations which would otherwise apply along portions of #lot lines—# abutting# other #zoning lots# within the #large-scale community facility development#.

As a condition of granting such authorizations, in each case the Commission shall make the following special findings:

(a) that such distribution or location will permit better site planning and will thus benefit both the residents, occupants, or users of the #large-scale community facility development# and the City as a whole;

(b) that such distribution or location will not unduly increase the #bulk# of #buildings# in any #block#, to the detriment of the occupants or users of #buildings# in the #block# or nearby #blocks#; and

(c) that such distribution or location will not affect adversely any other #zoning lots# outside the #large-scale community facility development# by restricting access to light and air or by creating traffic congestion.

In R9, R10, C1-8, C1-9, C2-7 or C2-8 Districts, or in C1 or C2 Districts mapped within R9 or R10 Districts, #floor area# bonuses for #public plazas# or #arcades# permitted in accordance

with the applicable district regulations shall apply only to a #development# or #enlargement# with 25 percent or less of ~~its~~ the total #floor area# of the #building# in #residential use#.

In R9, R10, C1-8, C1-9, C2-7 or C2-8 Districts, or in C1 or C2 Districts mapped within R9 or R10 Districts, no existing #publicly accessible open area#, #arcade# or other public amenity, open or enclosed, for which a #floor area# bonus has been received pursuant to regulations prior to February 9, 1994, shall be eliminated or reduced in size except by special permit, pursuant to Section 74-761 (Elimination or reduction in size of bonused public amenities).

79-30
PARKING REGULATIONS

79-31
Location of Parking Spaces

When a #large-scale community facility development# includes two or more #zoning lots#, the City Planning Commission may, upon application authorize permitted or required #accessory# off-street parking spaces or bicycle parking spaces to be located anywhere within the #large-scale community facility development# without regard for #zoning lot lines#, provided that in each case the Commission shall make the following special findings:

(a) that such off-street parking spaces or bicycle parking spaces will be conveniently located in relation to the #use# or #uses# to which such spaces are #accessory#;

(b) that such location of the off-street parking spaces or bicycle parking spaces will permit better site planning and will thus benefit both the owners, occupants, employees, customers, residents, or visitors of the #large-scale community facility development# and the City as a whole; and

(c) that such location of the off-street parking spaces or bicycle parking spaces will not increase the number of spaces in any single #block# or the traffic drawn through any one or more of the nearby local #streets# in such measure as to affect adversely other #zoning lots# outside the #large-scale community facility development# or traffic conditions in the surrounding area.

Whenever required off-street parking spaces or bicycle parking spaces are authorized to be located without regard for #zoning lot lines# in accordance with the provisions of this Section, the number of spaces required for each #building# or #use# shall be kept available for such #building# or #use# throughout its life.

79-32
Location of Loading Berths

When a #large-scale community facility development# includes two or more #zoning lots#, the City Planning Commission may, upon application, authorize permitted required #accessory# loading berths to be located anywhere within the #large-scale community facility development# without regard for #zoning lot lines#, provided that in each case the Commission shall make the following special findings:

(a) that such loading berths will be appropriately located in relation to the #use# or #uses# to which such berths are #accessory# so as to permit better site planning and will thus benefit the owners, occupants, employees, residents or visitors to the #large-scale community facility development# and the City as a whole;

(b) that such loading berths will be accessible to all the #uses# in the #large-scale community facility development# without the need to cross any #wide street# at grade;

(c) that the location of such loading berths will not unduly affect the movement of

pedestrians or vehicles on the #streets# within or surrounding such #large-scale community facility development#; and

(d) that the loading berths comply with all other applicable district regulations.

79-40
SPECIAL PERMIT PROVISIONS

79-401
~~Special permit~~

~~For #large-scale community facility developments# for which #development# is authorized in accordance with the provisions of Section 79-402 (Special permit for development over streets) the City Planning Commission may grant special permits for such #development# in accordance with the applicable provisions of such section and may prescribe appropriate conditions and safeguard thereon. The requirements for findings as set forth in Section 79-402 (Special permit for development over streets) shall constitute a condition precedent to the grant of any special permit. The decision or determination of the Commission shall set forth each required finding in each grant of a special permit for a #large-scale community facility development#. Each finding shall be supported by substantial evidence or data considered by the Commission in reaching its final decision.~~

~~79-402~~
Special permit for development over streets

In a #large-scale community facility development# containing #schools#, hospitals or functionally related facilities in R6 or R7-1 Districts, in C1 or C2 Districts mapped within such #Residence Districts#, when the air space above a #narrow street# or portion thereof is closed and demapped the City Planning Commission may, by special permit, allow the demapped air space to be considered as part of the adjoining #zoning lots# constituting a single #zoning lot#, and may allow ~~on~~ within such demapped air space the #development# or #enlargement# of a #building# which is a necessary expansion of an existing #school#, hospital or functionally-related facility located on adjoining #zoning lots#. As a condition for granting a permit for such ~~air rights~~ #building# or portion thereof ~~on~~ within the demapped air space, the Commission shall find:

(a) that there is a Master Plan for institutional development which demonstrates that the ~~air rights~~ #building# over the #street# is necessary to avoid or minimize demolition of existing facilities, or #buildings designed for residential use#, and expansion on existing #zoning lots# owned by the community facility is not feasible to meet its expansion needs;

(b) that the location of such ~~air rights~~ #building# or portion thereof will not impair the existing ~~#residential#~~ residential character of the area;

(c) that ~~air rights~~ such #building# or portion thereof ~~on that portion of the #zoning lot# above the #street# bed~~ utilizes only unused #floor area# from adjoining #zoning lots# and no #floor area# credit is received from the demapped air space, and ~~the air rights building~~ complies with the off-street parking and loading requirements of the underlying district or districts;

(d) that ~~the air rights~~ such #building# or portion thereof is contained entirely within the buildable area of the air space plane as defined in this Section, ~~and~~ conforms with the height and setback regulations set forth in this Section~~.~~ ~~That the air rights building~~ is no more than 200 feet in length and ~~there~~ is ~~no more than one~~ the only such ~~air rights~~ #building# on a #block# front;

(e) that ~~the air rights~~ such #building# or portion thereof links the #zoning lots# across the #street#, in the same ownership, with adequate clearance above the #street# bed, and

there is no intrusion on the existing #street#, including column supports;

(f) that all #street# frontages of the #zoning lots# under ~~the air rights~~ such #building# or portion thereof are provided with fenestration or natural light along at least 75 percent of such frontages, and such #street# frontages when #developed# with #uses# other than open area, contain only #uses# requiring human occupancy such as amusement, education, dining, shopping and other similar #uses# permitted by the underlying district regulations. That the main entrance for principal pedestrian access to the #development# is located along the #street# frontages under ~~the air rights~~ such #building#. That no storage rooms, mechanical equipment rooms, parking and loading facilities or curb cuts are located along such #street# frontage unless authorized by the Commission;

(g) that a satisfactory lighting and ventilation plan consistent with current environmental standards is provided for the #development#; and

(h) that an additional amount of ~~#open space#~~ open space for public use at #street# level, linked with the pedestrian circulation system of the area, equivalent to the #street# area covered by ~~the air rights~~ such #building# is provided within 1,000 feet of the ~~air rights~~ building and such ~~#open space#~~ open space maintained as usable public area in the ownership of the applicant.

#Curb levels# of the pre-existing #zoning lots# shall not be affected by the closing and demapping of air space over such #street#.

The Commission may impose additional conditions and safeguards to improve the quality of the development and minimize adverse effects on the character of the surrounding area.

For the purposes of paragraph (d) of this Section:

Air space plane is a plane above a #narrow street# located at the same elevation as the lower limiting plane of a volume of #street# eliminated, discontinued and closed by the Board of Estimate, or its successors. The length "L1" of such air space plane is the length of the common lot frontage of two #zoning lots# opposite and across the #street# in the same ownership and its width is the width of the #narrow street# "SW" (See illustration of Required Setback for the Buildable Area).

The buildable area "C" is the lower limiting plane of the volume of street eliminated, discontinued and closed by the Board of Estimate, or its successors, except that in no case shall the edge of the buildable area be closer to the edge of the air space plane by a distance equal to one half the street width "SW/2" (See illustration of Required Setback for the Buildable Area).

Modified Legend

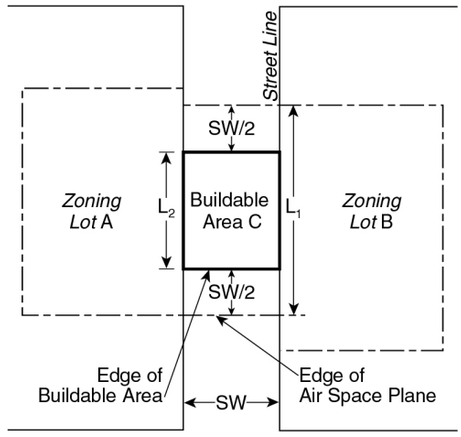

SW - Width of a *narrow street*

SW/2 - Minimum required setback for the buildable area from the edge of air space plane

L_1 - Length of common lot frontage of two *zoning lots* across a *narrow street*

L_2 - Permissible length of the buildable area for an air rights building

Replace L 2: L2 - Permissible length of the buildable area for ~~an air rights building~~ a #building# over the #street#

REQUIRED SETBACK FOR THE BUILDABLE AREA

The ~~air rights~~ #building# over the #street# shall comply with the height and setback regulations of this Section and the buildable area shall be completely covered by ~~the air rights~~ such #building#, except that ~~an air rights~~ such #building# may be set back from the edge of the buildable area which traverses the #street# provided that such setback area is open and obstructed from the lowest level of the #street# to the sky.

The #development# or #enlargement# of ~~an air rights~~ such #building# on the buildable area of the air space plane shall comply with the following #sky exposure plane# regulations (See illustration of Required Sky Exposure Plane):

	#Sky Exposure Plane#			
	Slope over buildable area (expressed as a ratio of vertical distance to horizontal distance)			
Height above #street# bed (in ft.)	Vertical Distance		Horizontal Distance	District
60	2.7	to	1	R6 R7-1 C1 C2

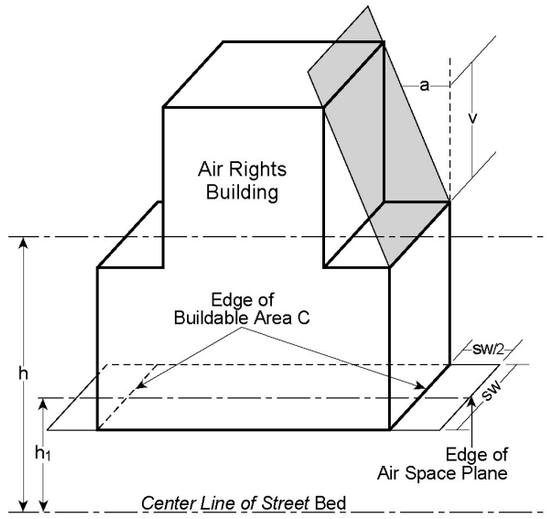

a - Horizontal distance
v - Vertical distance
h - Height of *sky exposure plane* above *center line of street* bed
h_1 - Required clearance above *center line of street* bed for an air rights building
$h–h_1$ - (h minus h_1) Maximum permissible height of vertical wall of air rights building along the edge of a buildable area
SW - Width of a *narrow street*
SW/2 - Minimum required setback for the buildable area from the edge of air space plane
Sky Exposure Plane

Change diagram: Change "air rights building" to "Building Over the Street" in all legend and in label on drawing

REQUIRED SKY EXPOSURE PLANE

The height of the vertical wall or any other portion of a~~n air rights~~ #building# ~~which traverses~~ over the #street#, shall not penetrate the #sky exposure plane#.

The #sky exposure plane# shall be measured from a point above the edge of the buildable area which traverses the #street#.

79-~~403~~ 402
Special permit for development of bridges over streets

In a #large-scale community facility development# containing hospitals or functionally-related facilities in Manhattan Community Board 12, when the air space above a #wide street# or portion thereof is closed and demapped, the City Planning Commission may, by special permit, allow the #development# in such demapped air space of an enclosed bridge or bridges to connect #buildings# within the #large-scale community facility development#. As a condition for granting a permit for #development# of such bridges, the Commission shall find that:

(a) such bridge or bridges are essential to ~~interest~~ internal circulation of the medical function of the health care facility;

(b) such bridge or bridges shall not rest upon columns or other supports which intrude upon the #street#;

(c) the width of each such bridge shall not exceed 20 feet;

(d) such bridge within the demapped air space utilizes only #floor area# derived from the adjoining #zoning lots# and that no #floor area# credit is generated from the demapped

air space;

(e) illumination of at least 5 foot candles is provided at the #curb level# of such bridge or bridges;

(f) such bridge in demapped air space over a #wide street# adjoins #zoning lots# wholly within the #large-scale community facility development#;

(g) the minimum horizontal distance between the nearest edges of two such bridges traversing the same #street# shall be two times the width of the #street#;

(h) the maximum exterior height of each such bridge shall not exceed 12 feet;

(i) the benefit gained from the bridge or bridges resulting from the #bulk# design or placement of such bridge or bridges outweighs any adverse impact on neighborhood character and any restriction of access to light and air to surrounding public spaces and #streets#; and

(j) a landscaped open area for public use at #street# level, linked with the pedestrian circulation system, which is at least equivalent to the #street# area covered by the bridge is provided in one location within the #large-scale community facility development# and such open area is maintained with planting and seating facilities by the owner of the #large-scale community facility development# or the owner's designee.

The City Planning Commission may prescribe appropriate conditions and safeguards to minimize the effect of the bridges including but not limited to clearance above the #street# and surfacing materials of the bridge.

* * *

79-43
Special Permit for Limited Bulk Modifications for Certain Large- Scale Community Facility Developments

For #large-scale community facility developments# located within the boundaries of Community Districts 8 and 12 in the Borough of Manhattan, that contain #community facility uses# specified in Section 73-64 (Modification for Community Facility Uses), the City Planning Commission may, by special permit, permit modification of regulations relating to height and setback on the periphery of the #large-scale community facility development#, #courts# and distance between windows and walls or #lot lines# not otherwise allowed in Section 79-21 (General Provisions). As a condition for such action, the Commission shall find that such modification:

(a) is required in order to enable the #large-scale community facility development# to provide an essential service to the community;

(b) will provide a more satisfactory physical relationship to the existing #buildings# which form the #large-scale community facility development#, and provide a more efficient and integrated site plan;

(c) will better complement the existing character of the neighborhood;

(d) will not unduly increase the #bulk# of #buildings# in any #block#, to the detriment of the occupants or users of #buildings# in the #block# or nearby #blocks#; and

(e) will not adversely affect any other #zoning lots# or #streets# outside the #large-scale community facility development# by unduly restricting access to light and air.

* * *

Article VIII - Special Purpose Districts

* * *

Chapter 1
Special Midtown District

81-00
GENERAL PURPOSES

* * *

81-01
Definitions

For purposes of this Chapter, matter in italics is defined in Sections 12-10 (DEFINITIONS), 81-261 (Definitions) or 81-271 (Definitions).

~~Special Clinton District~~

~~The #Special Clinton District# is a Special Purpose District designated by the letters "CL," in which special regulations set forth in Article IX, Chapter 6, apply.~~

~~Special Midtown District~~
~~(repeated from Section 12-10)~~

~~The "Special Midtown District" is a Special Purpose District designated by the letters "MiD" in which special regulations set forth in Article VIII, Chapter 1, apply. The #Special Midtown District# appears on the #zoning maps# superimposed on other districts, and its regulations supplement and modify those of the districts on which it is superimposed.~~

* * *

81-06
Applicability of Article VII Provisions

* * *

81-066
Special permit modifications of Section 81-254, Section 81-40 and certain Sections of Article VII, Chapter 7

The Commission may prescribe appropriate conditions and safeguards to minimize adverse effects on the character of the surrounding area.

(a) The City Planning Commission, by special permit, for #zoning lots# where the #lot area# is at least 60,000 square feet or that occupy an entire #block#, may permit modification of the mandatory district plan elements of Section 81-40 or the provisions of Article VII, Chapter 7, that determine the distribution of permitted #floor area# on such #zoning lots# and, in conjunction with such modifications, may also modify the applicable #yard# and #court# requirements. However, no exception to the #street wall# or retail continuity requirements shall be permitted on Fifth Avenue or within 50 feet of Fifth Avenue within the #Special Midtown District#.

The modifications shall be subject to the following findings:

(1) that the modifications of mandatory plan elements, #floor area# allocation or #rear yard# and #court# regulations, result in a better arrangement of required facilities or in better site planning on a uniquely large #zoning lot#;

(2) that a substantial majority of the #zoning lot# is either vacant at the time of certification for review, pursuant to Section 197-c of the New York City Charter, or contains #buildings# that will be ~~an integral part of~~ integrally related to ~~the~~ #developments#, both physically and programmatically;

(3) that the design, scale and location of the new #buildings# or #enlarged buildings# are compatible with the character of the surrounding area and existing #buildings# to remain on the #zoning lot#;

(4) that such modifications will not unduly obstruct the access of light and air to surrounding properties;

(5) that any adverse impact on retail continuity is minimized by a site plan that requires pedestrian-oriented #uses# along the boundaries of any open or enclosed public areas ~~within~~ on the ~~#development#~~ #zoning lot#;

(6) that such modifications of mandatory plan elements or #floor area# allocation are consistent with the basic strategy of the #Special Midtown District# and the purposes of the Mandatory District Plan Elements.

(b) For #developments# or #enlargements# on a #zoning lot# with a #lot area# of at least 60,000 square feet located wholly or partially in the Penn Center Subdistrict, which have been granted a #floor area# bonus for subway station and/or rail mass transit facility improvements pursuant to Section 81-541 in accordance with Section 74-634 (Subway station improvements in Downtown Brooklyn and in commercial zones of 10 FAR and above in Manhattan), the Commission may permit modifications of the mandatory district plan elements of Section 81-40, the height and setback regulations of 81-26 and 81-27, or the provisions of Article VII, Chapter 7 (Special Provisions for Zoning Lots Divided by District Boundaries), that determine the distribution of permitted #floor area# on such #zoning lots# and, in conjunction with such modifications, may also modify the applicable #yard# and #court# requirements subject to the following findings:

* * *

(4) any adverse impact on retail continuity is minimized by a site plan that requires pedestrian-oriented #uses# along the boundaries of any open or enclosed public areas within the ~~#development#~~ #zoning lot#;

* * *

81-067
Modification of provisions for ~~required front yards,~~ minimum base height and street wall location in Historic Districts

Within the Special Midtown District, for any #zoning lot# located in a Historic District designated by the Landmarks Preservation Commission, any applicable provisions relating to ~~minimum required #front yards#,~~ minimum base height and #street wall# location requirements as modified by this Chapter in Sections 81-43 (Street Wall Continuity Along Designated Streets), 81-621 (Special street wall requirements) pertaining to the Grand Central Subdistrict, 81-75 (Special Street Wall and Setback Requirements) pertaining to the Theater Subdistrict, 81-83 (Special Street Wall Requirements) pertaining to the Fifth Avenue Subdistrict, and 81-90 (SPECIAL REGULATIONS FOR PRESERVATION SUBDISTRICT) pertaining to mandatory #street walls# may be modified pursuant to Sections ~~23-45 (Minimum Required Front Yards),~~ 23-633 (Street wall location and height and setback regulations in certain districts) and 35-24 (Special Street Wall Location and Height and Setback Regulations in Certain Districts).

81-10
USE REGULATIONS

* * *

81-14
Modification of Sign and Frontage Regulations in the Fifth Avenue Subdistrict

* * *

81-142
Special frontage regulations

(a) Transparency requirement

On #wide street# frontages in underlying C5 Districts, at least 50 percent of a #building's street wall# surface shall be glazed and transparent at the ground floor level, and not more than 50 percent of such transparent surface shall be painted. For the purpose of the glazing requirements, the #building's street wall# surface at the ground floor level shall be measured from the floor to the height of the ceiling or 14 feet above grade, whichever is less.

(b) Banners or pennants

The display of banners or pennants from the exterior of ~~new or existing~~ any #buildings# in an underlying C5 District is prohibited.

81-20
BULK REGULATIONS

81-21
Floor Area Ratio Regulations

* * *

81-211
Maximum floor area ratio for non-residential or mixed buildings

(a) For ~~non-#residential~~ #non-residential buildings# or #mixed buildings#, the basic maximum #floor area ratios# of the underlying districts shall apply as set forth in this Section.

(b) In the #Special Midtown District#, the basic maximum #floor area ratio# on any #zoning lot# may be increased by bonuses or other #floor area# allowances only in accordance with the provisions of this Chapter, and the maximum #floor area ratio# with such additional #floor area# allowances shall in no event exceed the amount set forth for each underlying district in the following table:

* * *

81-212
Special provisions for transfer of development rights from landmark sites

* * *

For ~~new~~ #developments# or #enlargements# in C5-3, C6-6, C6-7 and C6-7T Districts, the City Planning Commission may also modify or waive the requirements of Section 23-86 (Minimum Distance Between Legally Required Windows and Walls or Lot Lines) and requirements governing the minimum dimensions of a #court#, where:

(a) the required minimum distance as set forth in Section 23-86 is provided between the #legally required windows# in the ~~new~~ #development# or #enlargement# and a wall or #lot line# on an adjacent #zoning lot# occupied by the landmark; and

(b) such required minimum distance is provided by a light and air easement on the #zoning lot# occupied by the landmark, and such easement is acceptable to the Department of City Planning and recorded in the County Clerk's office of the county in which such tracts of land are located.

For ~~new~~ #developments# or #enlargements#, on #zoning lots# located in C5-3, C6-6, C6-7 and C6-7T Districts and with frontage on #streets# on which curb cuts are restricted pursuant to Section 81-44, the Commission may also modify or waive the number of loading berths required pursuant to Section 36-62 (Required Accessory Loading Berths). In granting such special permit, the Commission shall find that:

(1) a loading berth permitted by Commission authorization pursuant to Section 81-44 would have an adverse impact on the landmark #building or other structure# that is the subject of the special permit;

(2) because of existing #buildings# on the #zoning lot#, there is no other feasible location for the required loading berths; and

(3) the modification or waiver will not create or contribute to serious traffic congestion or unduly inhibit vehicular and pedestrian movement. For ~~new~~ #developments# or #enlargements#, on #zoning lots# located in C5-3, C6-6, C6-7 and C6-7T Districts, the Commission may also modify the dimensions and minimum clear height required for pedestrian circulation space pursuant to Sections 37-50 and 81-45. In granting such special permit, the Commission shall find that the modification will result in a distribution of #bulk# and arrangement of #uses# on the #zoning lot# that relate more harmoniously with the landmark #building or other structure# that is the subject of the special permit.

* * *

81-23
Floor Area Bonus for Public Plazas

Within the #Special Midtown District#, for each square foot of #public plaza# provided on a #zoning lot#, the basic maximum #floor area# permitted on that #zoning lot# under the provisions of Section 81-211 (Maximum floor area ratio for non-residential or mixed buildings) may be increased by six square feet, provided that in no case shall such bonus #floor area# exceed a #floor area ratio# of 1.0.

This Section shall be applicable in all underlying districts throughout the #Special Midtown District#, except that <u>there shall be no #floor area# bonus for a #public plaza# that is</u>:

(a) ~~there shall be no #floor area# bonus for a #public plaza#~~ on #zoning lots# in the C5P District within the Preservation Subdistrict;

(b) ~~no #development# or #enlargement# on a #zoning lot# shall receive a bonus for a #public plaza# that is~~ within 50 feet of a #street line# of a designated #street# on which retail or #street wall# continuity is required, pursuant to Sections 81-42 (Retail Continuity Along Designated Streets) or 81-43 (Street Wall Continuity Along Designated Streets);

(c) ~~no #development# or #enlargement#~~ on a #zoning lot#, any portion of which is within the Theater Subdistrict Core, as defined in Section 81-71 (General Provisions)~~, shall receive a bonus for a #public plaza#~~; and

(d) ~~there shall be no #floor area# bonus for a #public plaza#~~ on #zoning lots#<u>, any portion of which are</u> in the Grand Central Subdistrict.

All #public plazas# provided within the #Special Midtown District# shall comply with the requirements for #public plazas# set forth in Section 37-70, inclusive.

A major portion of a #public plaza# may overlap with a sidewalk widening which may be

provided to fulfill the minimum pedestrian circulation space requirements set forth in Section 81-45 (Pedestrian Circulation Space), provided that the overlapping portion of the #public plaza# also conforms to the design standards of Section 37-50 (REQUIREMENTS FOR PEDESTRIAN CIRCULATION SPACE) for a sidewalk widening. Such sidewalk widening may be included in the major portion of a #public plaza# for purposes of calculating the proportional restrictions set forth in Section 37-715.

* * *

81-24
Floor Area, Lot Coverage and Building Spacing Regulations for Residential Uses

81-241
Maximum floor area ratios for a residential building or the residential portion of a mixed building

For #residential buildings# or #residential# portions of #mixed buildings# in the #Special Midtown District#, the maximum #floor area ratio# for each underlying district is as follows:

(a) In the C5-P District the maximum #floor area ratio# is 8.0, and no additional #floor area# shall be allowed above this limit.

(b) In all underlying districts other than the C5-P District, except as provided in paragraph (c) of this Section, the maximum #residential floor area ratio# is 10.0.

(c) ~~A #residential building# or the #residential# portion of a #mixed building# i~~ In any underlying district other than a C5-P, C6-4 or C6-5 District or ~~a #residential building# or the #residential# portion of a #mixed building#~~ in a C6-4 or C6-5 District within the Theater Subdistrict ~~which~~ where a #zoning lot# has been granted bonus #floor area# or other #floor area# allowances in accordance with the provisions of Section 81-741 (General provisions), such #zoning lot# shall qualify for a maximum #residential floor area ratio# of 12.0 if the ~~#building#~~ #development# or the #building# containing the #enlargement# includes recreational space for the #residential# occupants in an amount not less than ~~6.5 square feet for each #room#~~, 13 square feet for each #rooming unit#, 16.25 square feet for each #dwelling unit#, or a total area of at least 5,000 square feet, whichever is greater. The recreational space may be located at any level including a roof. Such recreational space shall:

(1) be restricted to #residential# occupants of the ~~#building#~~ #development# or the #building# containing the #enlargement# and their guests for whom no admission or membership fees may be charged;

* * *

81-242
Regulations on minimum spacing between buildings

~~In addition, w~~ When a #building# containing #residential uses# is located on the same #zoning lot# as another #building#, the provisions of Section 23-70 (MINIMUM REQUIRED DISTANCE BETWEEN TWO OR MORE BUILDINGS ON A SINGLE ZONING LOT) shall not apply.

81-25
General Provisions Relating to Height and Setback of Buildings

For all #buildings# in the #Special Midtown District#, except as provided in Section 81-90 (SPECIAL REGULATIONS FOR PRESERVATION SUBDISTRICT), the height and setback regulations of the underlying districts are superseded by the provisions of this Section and by the two alternate sets of regulations controlling the height and setback of #buildings# as set forth in

Sections 81-26 (Height and Setback Regulations--Daylight Compensation) and 81-27 (Alternate Height and Setback Regulation--Daylight Evaluation), respectively. For the purposes of applying height and setback regulations, the term "#buildings#" shall include #buildings or other structures# except if specifically stated otherwise.

For the purposes of Sections 81-25 through 81-27, inclusive, all #buildings# on a #zoning lot# shall be considered a single #building#. Existing portions of such #buildings# are referred to as an "existing #building#". A "new #building#" shall include #developments#, #enlargements# or alterations that increase the width or height of a #building# wall.

An applicant for plan approval by the Department of Buildings may elect to be governed by the provisions of either Sections 81-26 or 81-27 in addition to the provisions of this Section.

This Section sets forth the provisions that are common to both sets of regulations.

81-251
Purpose of height and setback regulations

The common purpose of these two sets of regulations is to offer maximum design flexibility while setting reasonable but firm standards to protect access of light and air to public #streets# and adjacent #buildings#.

This purpose is implemented by the two alternate sets of regulations, which are based on two distinct approaches. Both sets are concerned with daylight at #street# level.

The daylight compensation regulations require any #building~~s~~# generally to be built within a sky exposure curve which relates required setbacks to building heights. Within limits, the #buildings# may encroach outside the curve but only if extra setbacks or recesses provided elsewhere on the same #street# frontage of the #zoning lot# compensate for the #encroachment#. In the regulations, the sky exposure curve for three #street# width categories is represented in each case by a table of required setbacks related to building heights.

The daylight evaluation regulations measure and evaluate portions of sky blocked by a #building# as viewed from specified #vantage points# in the #street#. The #building# is plotted on #daylight evaluation charts# representing the #zoning lot's# available daylight from specified #vantage points#, measured in daylight squares as defined in paragraph (b) of Section 81-272. Daylight blockage by the #building# is then measured to determine the #building's# score on each frontage and the average score for the #building# as a whole. The regulations specify the minimum passing scores for compliance.

* * *

81-253
Special provisions for Grand Central, Theater, Fifth Avenue, Penn Center and Preservation Subdistricts

The provisions of Sections 81-26 (Height and Setback Regulations) and 81-27 (Alternate Height and Setback Regulations) are supplemented and modified by special provisions applying in the Fifth Avenue Subdistrict, as set forth in Section 81-81 (General Provisions) and Section 81-83 (Special Street Wall Requirements) or in the Theater Subdistrict as set forth in Sections 81-71 (General Provisions) and 81-75 (Special Street Wall and Setback Requirements) or in the Grand Central Subdistrict as set forth in Sections 81-61 (General Provisions), 81-621 (Special street wall requirements) and 81-622 (Special height and setback requirements).

The provisions of Sections 81-26 and 81-27 are not applicable in the Preservation Subdistrict, where ~~front wall~~ height~~s~~ and setback~~s~~ ~~are~~ is regulated by the provisions of Section 81-90 (SPECIAL REGULATIONS FOR PRESERVATION SUBDISTRICT), or in the Penn Center Subdistrict as set forth in Section 81-532 (Special street wall requirements).

81-254
Special permit for height and setback modifications

In the #Special Midtown District#, the City Planning Commission may modify the special height and setback regulations set forth in this Chapter only in accordance with the following provisions:

Section 74-711	(Landmark preservation in all districts) as modified by the provisions of Sections 81-266 or 81-277 (Special permit for height and setback modifications)
Section 74-79	(Transfer of Development Rights from Landmark Sites) where development rights are transferred from a landmark site to an adjacent lot in a C5-3, C6-6 or C6-7 District, as modified by Section 81-212, and the total #floor area# on the adjacent lot resulting from such transfer exceeds the basic maximum #floor area ratio# by more than 20 percent. In such cases, the granting of a special permit by the Commission for height and setback modifications shall be in accordance with the provisions of Sections 81-266 or 81-277~~;~~
Section 81-066	(Special permit modifications of Section 81-254, Section 81-40 and certain Sections of Article VII, Chapter 7)~~.~~
Section 81-635	(Transfer of development rights by special permit).

81-26
Height and Setback Regulations-Daylight Compensation

81-261
Definitions

Compensating recess

A portion of a #zoning lot# which, at the #building# height selected for determining compliance with the provisions of Section 81-26 (Height and Setback Regulations), lies in the #free zone# (Zone A on the #encroachment grid#), is not covered by any portion of a #building~~ or other structure~~# and qualifies as compensating for #~~building~~ encroachments# beyond the #free zone# under the provisions of Section 81-264 (Encroachments and compensating recesses). (See Illustration of #Compensating Recess# and #Encroachment#)

* * *

Encroachment

A projection beyond the #setback line#, the #free zone# or the #half-setback line# by any portion of a #building~~ or other structure~~# that exceeds the maximum height permitted at the #street line#. (See Illustration of #Compensating Recess# and #Encroachment#)

* * *

Setback line

A line drawn in plan parallel to a #street line# and showing for a given #building# height the minimum depth to which a #building~~'s~~# ~~front wall~~ is required to be set back from the #street line# by the applicable depth to height chart in Section 81-263 (Standard setback requirements). Required setbacks, established by the chart, increase with the #building's# height. (See Illustration of #Setback# and #Half-Setback Lines#)

* * *

Ten-foot setback line

A line which is parallel to the #street line# at a ~~distance~~ depth of 10 feet ~~therefrom~~ and represents the minimum distance any portion of a #building~~'s~~# ~~front wall~~ exceeding the maximum height at the #street line# is required to be set back from the #street line#. A greater setback distance may be required by a #setback line# or a #half-setback line# depending upon the #building# height for which such #setback line# or #half-setback line# is established.

* * *

81-263
Standard setback requirements

~~If a #building# complies~~ #Buildings# shall comply with the regulations of this Section~~, it will be in compliance with the height and setback regulations~~.

(a) Ten-foot setback requirement

Above the maximum height permitted at the #street line# pursuant to the provisions of Section 81-262, every portion of a #building~~'s~~# ~~front wall~~ shall be set back at least 10 feet from the #street line#.

(b) General setback provisions; depth to height charts

Above the maximum height permitted at the #street line, buildings# ~~walls~~, in addition to meeting the requirements of paragraph (a) of this Section, are required to be set back behind the applicable #setback line#, the depth of the #setback line# at any point depending upon the height of the wall at that point in accordance with the requirements of applicable Tables A, B or C of this Section presenting required setbacks from #streets# 60 feet or less, 75 or 80 feet, or 100 or more feet in width, respectively.

* * *

(d) #Middle one-third rule#

A #building# ~~wall~~ may penetrate beyond the #setback line# at any height if the penetration is confined to the middle third of the #front lot line# length and complies in all respects with the #middle one-third rule# as defined in Section 81-261 (Definitions).

81-264
Encroachments and compensating recesses

In addition to complying with the setback requirements of Section 81-263 (Standard setback requirements), a ~~A #development# will be in compliance with the height and setback regulations of this Chapter if it does~~ #building# shall not at any height encroach beyond a #half-setback line# or a #ten-foot setback line# ~~and,~~ except as provided below~~,~~ . ~~f~~ For each #street frontage zone# and for all #street frontage zones#, taken together on a single #encroachment grid#, ~~at no~~ a #building# shall not at any level ~~has~~ have an aggregate area of #encroachment# beyond the #setback line#, other than in any #free zones#, greater than the aggregate area of #compensating recess# at such level.

Except as provided below, an area of #compensating recess# in one #street frontage zone# shall not be used to compensate for #encroachment# in another #street frontage zone#. However, a ~~#development#~~ #building# with a #street frontage zone# which lies along a north-south #wide street# and does not meet the above requirements because of excessive #encroachment# will be in compliance with the #street frontage zone# requirements of this Section if ~~each such area of excessive #encroachment# within that portion of the #street frontage zone# along the north-south #wide street# which is overlapped by another #street frontage zone# is compensated for in that~~

~~other #street frontage zone#~~ compensation is provided for such excessive #encroachment# by an overlapping #street frontage zone#.

The requirement that aggregate area of #compensating recess# at least equal the aggregate area of #encroachment# as set forth in this Section shall also apply to any ~~#development#~~ #building# which encroaches beyond a #half-setback line# and which is therefore subject to the provisions of Section 81-265 (Encroachment limitations by length and height rules). (See Illustration of Encroachments and Compensating Recesses)

(a) Rules for measuring #encroachments# and recesses

* * *

The scale of the #encroachment grid# shall be not more than 20 feet to the inch. All #buildings~~ or other structures~~#, existing and proposed, shall be located accurately on the grid in plan at the height level selected to demonstrate compliance. For each #street frontage zone#, the areas of the #building's encroachment# in #Zones B# and #C# and the #compensating recess# areas not covered by any #building# in #Zone A# shall be measured on the #encroachment grid#.

(b) Limits of #encroachment#

* * *

(3) On #corner lots#, the projection of a #building'~~s~~# ~~front wall~~ beyond the #setback# or #half-setback line# on the narrower #street# shall not count as an #encroachment# except at heights above the maximum height permitted at the #street line# by the #corner lot# provisions in paragraph (b) of Section 81-262 (Maximum height of front wall at the street line).

* * *

81-27
Alternative Height and Setback Regulations - Daylight Evaluation

81-271
Definitions

Center line of the street (bounding a #zoning lot#)

A line equidistant from and parallel or nearly parallel to the #street lines# on both sides of the #street#. However:

(a) For the purposes of daylight evaluation, on a #street# 75 feet in width, the #center line of the street# shall be considered to be a line 40 feet from and parallel to the #front lot line# of the #zoning lot#.

(b) For the purposes of daylight evaluation, on a #street# more than 100 feet in width, the #center line of the street# shall be considered to be a line 50 feet from and parallel to the #front lot line# of the #zoning lot#.

Daylight Evaluation Chart (DEC)

A graphic tool which permits objective measurements of portions of sky blocked by a #building# when it is viewed from a #vantage point#. There are three #daylight evaluation charts# for use with #street# widths of 60 feet, 75 to 80 feet and 100 feet and over, respectively. ~~Proposed #buildings# or #enlargements#~~ All #buildings# are drawn on the appropriate #daylight evaluation chart# to evaluate their compliance with the regulations of Section 81-27 (Alternate Height and Setback Regulations). The three #daylight evaluation charts# are presented in Appendix A of this Chapter.

* * *

Vantage point

A point on the #center line of the street# bounding the #zoning lot# ~~for a proposed #development# or #enlargement#~~ and located 250 feet from the intersection of the extension of the #zoning lot's far lot line# with the #center line of the street#. (See Illustration of #Far Lot Line# and #Vantage Point#)

Vantage street

A #street# bounding the #zoning lot# ~~for a proposed #development# or #enlargement#~~ and on the center line of which a #vantage point# is located.

81-272
Features of the Daylight Evaluation Chart

* * *

(e) The #profile curve#

The grid is traversed by the #profile curve#, which rises from the intersection of the curved line representing an elevation angle of 72 degrees with the vertical line at the #far lot line#. The #profile curve# is derived from the predominant built character of developed Midtown ~~#streets#~~ streets as seen in profile. #Encroachment# across the #profile curve# is penalized to discourage canyon-like Midtown ~~#streets#~~ streets and to protect neighboring #buildings#.

81-273
Rules for plotting buildings on the daylight evaluation chart

Evaluation of a proposed #development# or #enlargement# requires drawing the ~~proposed #development# or #enlargement# (including~~ new #buildings#, remaining #buildings#, and ~~#open spaces#~~ open areas on the #zoning lot#~~)~~ on the appropriate #daylight evaluation chart# as viewed from each required #vantage point# and then scoring the #zoning lot# ~~#development# or #enlargement#~~. The rules for plotting #buildings# on the #DEC# are set forth in the following paragraphs of this Section and illustrated by an example of a #building# which fronts on a 100 foot wide #street# and occupies a site 170 feet long by 100 feet deep.

* * *

81-274
Rules for determining the daylight evaluation score

A ~~#building#~~ #zoning lot# is scored by determining the number and the value of the daylight squares ~~it~~ the #building# blocks when viewed from the #vantage point#, compared to the total number of daylight squares available within the daylight boundaries as determined in paragraph (f) of Section 81-273 (Rules for plotting buildings on the daylight evaluation chart) and above an elevation angle of 70 degrees.

* * *

(i) The passing score

To be in compliance with these regulations, a ~~#development# or #enlargement#~~ #zoning lot# must have an overall score of not less than 75 percent, with no single #street# frontage having a street score of less than 66 percent. If a ~~#development# or #enlargement#~~ #zoning lot# fronts only on one #street#, a daylight evaluation score of not

less than 75 percent is required for that #street# frontage. If a street score is less than 66 percent, or if the overall daylight score is less than the passing score of 75 percent, a modest improvement in either the street score or the overall score may be obtained by scoring the relative reflectivity of the #building's# surface as specified in Section 81-276 (Modification of score for reflectivity). The passing daylight score of 75 percent is equivalent to the average daylight levels of Midtown #buildings# built as-of-right under the 1916 and 1961 Zoning Resolutions. The minimum requirement of 66 percent on one frontage is equivalent to the daylight level of any #interior lot building# built in Midtown under the 1916 Zoning Resolution in a two-times height district. However, if any one frontage is less than 75 percent, other frontages must be greater than 75 percent to reach the passing overall daylight score. This allows flexibility in building design while maintaining daylight standards within the levels established by #buildings# built as-of-right under the 1916 and 1961 Zoning Resolutions. (See Illustration of Daylight Evaluation Score Results)

* * *

81-276
Modification of score for reflectivity

Where ~~#buildings#~~ #zoning lots# have utilized the #daylight evaluation chart# but a street score along one frontage is less than 66 percent or the overall score is less than 75 percent, a modest improvement in either the street score or the overall score of a #zoning lot# with a #building# which reflects more light than a medium gray or glass #building# may be obtained by scoring the relative reflectivity of the building's surface.

The use of reflectivity is optional and not necessary if a passing score can be obtained under Section 81-274 (Rules for determining the daylight evaluation score). Reflectivity scoring permits greater design flexibility for a light-colored #building# than a dark one.

Because the greatest reflectivity comes from the upper portions of #buildings#, the value of reflected light is credited against the amount of daylight blocked by the portions of the #building# above an elevation angle of 70 degrees from the #center line of the street#.

Reflectivity has two components: the reflectance of the surface material and the orientation of the material to the sun.

(a) Reflectance

* * *

(2) Relative reflectance

In order to be included in the reflectivity score of a ~~#building#~~ #zoning lot#, the material of the #building# must reflect more light than a medium gray or glass #building#. The reflectance value of a medium gray or glass #building# in Midtown is .15 so that the #building# with an overall reflectance of .33 given in the example above would be increasing the expected reflectance by .33 minus .15 which equals .18.

Examples of potential reflectance values for different types of surface finishes are shown on the following chart.

* * *

(c) Reflectivity Score

* * *

The reflectivity score is added to the daylight remaining after accounting for daylight blockage as calculated in paragraph (f) of Section 81-274 (Rules for determining the

daylight evaluation score).

The sum is then calculated as a percentage of the available daylight squares calculated in paragraph (e) of Section 81-274 to give the adjusted daylight score for the ~~#building#~~ #zoning lot# from the #vantage point# represented on the #daylight evaluation chart#.

The adjusted street score along a particular #vantage street# is obtained by calculating the mean average of the adjusted daylight scores from all #vantage points# along the #vantage street#.

The adjusted overall score for the ~~#building#~~ #zoning lot# is obtained by calculating the average of the adjusted street scores weighted by the lengths of their respective #vantage street# frontages.

(d) Limits on adjusted scores

(1) Adjusted street score

The adjusted street score shall not be more than six percentage points higher than the street score not adjusted for reflectivity.

If reflectivity scoring is used to bring the adjusted overall score for the ~~#building#~~ #zoning lot# above 75 percent (the passing overall score), the street score for each #street# frontage without adjustment for reflectivity shall be not less than 66 percent.

(2) Adjusted overall score

The adjusted overall score shall not be more than six percentage points higher than the overall score not adjusted for reflectivity.

If the reflectivity scores for any single #street# frontage are used to bring the adjusted street score for that frontage above 66 percent (the passing score for a single #street# frontage), the ~~#building's#~~ overall score of the #zoning lot# without adjustment for reflectivity shall be not less than 75 percent.

* * *

81-28
Minimum Distance Between Buildings

On any single #zoning lot# within the #Special Midtown District#, if ~~a #development# or #enlargement# results in~~ two or more #buildings# or portions of #buildings# are detached from one another at any level, such #buildings# or portions of #buildings# shall at no point be less than 8 feet apart.

81-29
Incentives by Special Permit For Provisions of Public Amenities

* * *

81-292
Subway station improvements

Except in the Preservation Subdistrict and except for #zoning lots# wholly within the Theater Subdistrict Core, as defined in Section 81-71 (General Provisions), the City Planning Commission may grant special permits for #floor area# bonuses for #non-# residential# or #mixed buildings#, in accordance with the provisions of Section 74-634 (Subway station improvements in commercial zones of 10 FAR and above in Manhattan).

The subway stations where such improvements are permitted are listed in the following table and shown on Map 3 (Subway Station and Rail Mass Transit Facility Improvement Areas) in Appendix A of this Chapter.

MIDTOWN SUBWAY STATIONS

Station	Line
34th St.-Penn Station	Broadway-7th Ave. ~~IRT~~
34th St.-Penn Station	8th Ave. ~~IND~~
34th St.-Herald Square	6th Ave.~~IND~~/Broadway-60th St. ~~BMT~~
~~42nd Street~~	~~8th Ave. IND~~
42nd St.-Times Square/42nd St.-Port Authority Bus Terminal	Broadway-7th Ave. ~~IRT~~/ Broadway ~~BMT~~/8th Ave./42nd St. Shuttle
42nd Street-Bryant Park/Fifth Ave.	6th Ave. ~~IND~~/Flushing
42nd St.-Grand Central	Lexington Ave.~~IRT~~/Flushing/42nd St Shuttle
47th-50th St.-Rockefeller Center	6th Ave. ~~IND~~
49th Street	Broadway-60th St.~~BMT~~
50th Street	8th Ave.~~IND~~
50th Street	Broadway-7th Ave. ~~IRT~~
~~51st Street~~	~~Lexington Ave. IRT~~
7th Ave. ~~(53rd St.)~~	~~6th Ave. IND~~53rd St.
Fifth Ave.- ~~(~~53rd St.~~)~~	53rd St.~~Queens IND~~
51st St./Lexington Ave.-~~3rd Ave (~~53rd St.~~)~~	53rd St./Lexington Ave.~~Queens IND~~
57th Street	Broadway-60th St.~~BMT~~
57th Street	6th Ave.~~IND~~
59th St.-Columbus Circle	Broadway-7th Ave. ~~IRT~~/8th Ave.~~IND~~

* * *

81-40
MANDATORY DISTRICT PLAN ELEMENTS

81-41
General Provisions

The provisions of Section 81-40 (MANDATORY DISTRICT PLAN ELEMENTS) specify mandatory planning and urban design features ~~to be provided in connection with new #developments# or #enlargements#~~ . Requirements which apply generally or with minor specified exceptions throughout the #Special Midtown District# are fully set forth in the provisions of Section 81-40. For requirements which are not generally applicable but tied to specific locations within the District, the locations where these requirements apply are shown on Map 2 (Retail and Street Wall Continuity) or Map 3 (Subway Station and Rail Mass Transit Facility Improvement Areas) in Appendix A of this Chapter.

* * *

81-411
Maintenance of pedestrian circulation spaces

Owners of property on which pedestrian circulation spaces are provided shall be responsible for their maintenance unless, in the case of relocated subway stairs, the Metropolitan Transportation ~~Transit~~ Authority has agreed in writing to such maintenance responsibility.

* * *

81-42
Retail Continuity along Designated Streets

For #buildings developed# or #enlarged# after May 13, 1982, where the ground floor level of such #development# or #enlarged# portion of the #building# fronts upon a ~~On~~ designated retail #streets# (see Appendix A, Map 2), ~~for any #developments# or #enlargements# fronting on such #streets#,~~ #uses# within #stories# ~~located~~ on the ground floor or with a floor level ~~or~~ within five feet of #curb level# shall be limited to retail, personal service or amusement #uses# permitted by the underlying zoning district regulations but not including #uses# in Use Groups 6B, 6E, 7C, 7D, 8C, 8D, 9B, 10B, 11 and 12D or automobile showrooms or plumbing, heating or ventilating equipment showrooms. Museums and libraries shall be permitted. A #building's# #street# frontage shall be allocated exclusively to such #uses#, except for:

* * *

Except as provided in the following sentence, in no event shall the length of #street# frontage occupied by lobby space, entrance space and/or a building entrance recess exceed the lesser of: ~~in total~~ 40 feet or 25 percent of the #building's# total #street# frontage exclusive of any frontage occupied by a relocated subway stair, a through #block# connection, an off-street improvement of access to rail mass transit facility or the entrance area to a bonused subway station improvement. However, the total length of #street# frontage occupied by lobby space and/or entrance space need not be less than 20 feet.

* * *

~~#Developments# or #enlargements# on~~ Special #use# regulations apply along designated retail #streets# located within the boundaries of the Penn Center Subdistrict, the Theater Subdistrict or the Fifth Avenue Subdistrict and #uses# along such designated #streets# shall be subject to the respective Subdistrict retail requirements in Sections 81-531, 81-72 and 81-82.

~~All #street# frontages of #developments# or #enlargements# on~~ Special ground level and entertainment- related #use# regulations apply to #zoning lots# located within the Theater Subdistrict Core, as defined in Section 81-71 (General Provisions), and such #zoning lots# shall meet the ground level and entertainment-related #use# requirements of Section 81-72 (Use Regulations Modified).

81-43
Street Wall Continuity Along Designated Streets

On designated #streets# where #street wall# continuity is required (see Map 2 in Appendix A) and, between 43rd and 50th Streets, on the #narrow street# frontages of #zoning lots# with #street# frontage on Seventh Avenue and/or Broadway, ~~the surface of~~ the #street wall# of a ~~new #development# or #enlargement#~~ #building#, for the minimum ~~length~~ width and height set forth in this Section, shall be within 10 feet of the #street line# or within 10 feet of a permitted arcade's supporting columns at the #street line#, except that on 57th Street, 42nd Street, 34th Street and Fifth Avenue, no #street wall# setback below a height of 85 feet is permitted. The ~~length~~ width of the #street wall# subject to setback restrictions shall be at least 80 percent of the length of the #front lot line# of the #zoning lot# along the specified #street#, measured at the

specific heights or anywhere above the specific heights indicated on the following table. At those specific heights or anywhere above those specific heights, the #street wall# must extend continuously within 10 feet of the #street line# for all of its required ~~length~~ width, except that on 57th Street, 42nd Street, 34th Street and Fifth Avenue, at a height of 85 feet or above, the #street wall# must extend continuously without setback for at least 75 percent of its required ~~length~~ width and no portion of its required ~~length~~ width shall be set back more than 10 feet from the #street line#; and, for #zoning lots# between 43rd and 50th Streets with #street# frontage on Seventh Avenue and/or Broadway, any portion of the required ~~length~~ width of a #street wall# which lies behind a #sign# required under the provisions of Section 81-732 (Special Times Square signage requirements) may be set back up to 15 feet from the #street line#.

The minimum height of a #street wall# subject to the setback restrictions shall be as follows:

* * *

#Developments# which are in their entirety no more than two #stories# in height shall be exempt from the minimum #street wall# height requirements set forth in the table in this Section, except that, subsequent to the issuance of a building permit for such #development#, if there are additional #developments# on the #zoning lot# or if any #building# on the #zoning lot# is #enlarged#, the #development# exempt from the requirements set forth in the table in this Section shall no longer be exempt from such requirements and its #street walls# shall be raised to a height complying with the table.

Existing #buildings# need not comply with the minimum #street wall# height and location provisions of this Section. Such #buildings# shall be included in the calculation of the required percentage of #street wall# width and height along a street frontage. No existing #building# shall be altered such that a #non-compliance# with the provisions of this Section is created, nor shall an existing degree of #non-compliance# with these provisions be increased.

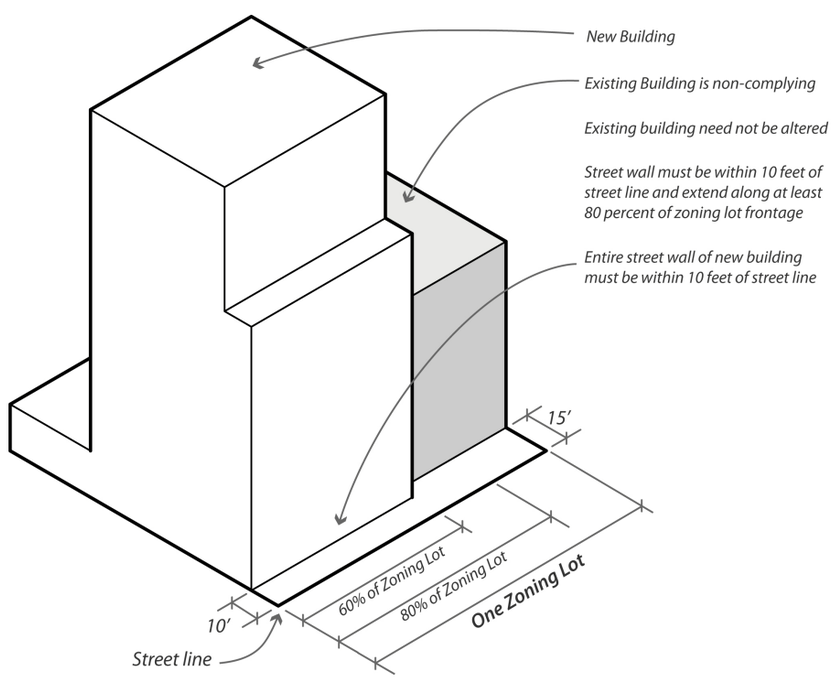

EXAMPLE OF STREET WALL REQUIREMENT WITH EXISTING BUILDING

Pedestrian circulation spaces may be provided to meet the requirements of Sections 81-45 (Pedestrian Circulation Space), 81-46 (Off-street Relocation or Renovation of a Subway Stair) or 81-48 (Off-street Improvement of Access to Rail Mass Transit Facility) subject to the setback restrictions of this Section and to the minimum ~~length~~ width of the #street wall# subject to such setback restrictions. However, the City Planning Commission may waive such restrictions for a subway entrance area which is part of a subway station or a rail mass transit facility improvement for which bonus #floor area# is granted, in accordance with the provisions of Sections 74-634 (Subway station improvements in commercial zones of 10 FAR and above in Manhattan), 81-292 (Subway station improvements) and 81-542 (Rail mass transit facility improvement), or an off-

street improvement of access to a rail mass transit facility that has been certified in accordance with Section 81-48.

Except on 57th Street, 42nd Street, 34th Street and Fifth Avenue, below the minimum height of a #street wall# subject to the setback restriction, recesses (whose depth shall be measured in all cases from the #street line#) shall be permitted only as follows: no recesses greater than 15 feet deep shall be permitted, recesses up to 15 feet deep shall be limited in their aggregate area to no more than 30 percent of the area of the new #street wall# below the minimum required #street wall# height; in addition, recesses up to 12 feet deep shall be limited in their aggregate area to no more than 20 percent of the area of the #street wall# below the minimum required #street wall# height, and recesses up to 10 feet deep shall not be limited in their aggregate area.

* * *

On Fifth Avenue, the minimum required #street wall# height without setback shall be 85 feet and the maximum allowable #street wall# height without setback shall be 125 feet. Above the maximum #street wall# height, a setback of at least 10 feet shall be required, pursuant to the provisions of Section 81-83.

~~Existing #buildings# on a #zoning lot# shall be included in measurements of the #street wall# . No existing #building# shall be altered such that a #non-compliance# with the provisions of this Section is created, nor shall an existing degree of #non-compliance# with these provisions be increased.~~

* * *

81-45
Pedestrian Circulation Space

Within the #Special Midtown District#, all ~~new~~ #developments# or #enlargements# constructed after May 13, 1982 on #zoning lots# of 5,000 square feet or larger with more than 70,000 square feet of new #floor area# shall provide pedestrian circulation space on such #zoning lot# in accordance with the provisions of Section 37-50, as modified by the provisions of this Section.

The requirements for pedestrian circulation space may be met by providing one or more of the following types of spaces: arcade, building entrance recess area, corner arcade, corner circulation space, relocation or renovation of a subway stair, sidewalk widening, subway station improvement, through #block# connection or #public plaza#.

In addition to the types of pedestrian circulation spaces listed in Section 37-50, the following may be counted toward meeting the minimum pedestrian circulation space requirement:

* * *

~~New~~ ~~#d~~ Developments# or #enlargements# on a #zoning lot# having a full #block# frontage on a #wide street# other than Fifth Avenue, 34th Street, 42nd Street or 57th Street shall provide a minimum of 50 percent of their required pedestrian circulation space on that #street#. In the case of a #zoning lot# having two full #block# frontages on #wide streets#, this minimum amount may be allocated on either one or both #wide streets#; where each #street# bounding a #zoning lot# with at least one full #block# frontage is a #wide street#, the minimum amount may be allowed on one or more of those #wide streets#.

Where pedestrian circulation space is provided along Seventh Avenue or Broadway between 43rd and 50th Streets, #signs# and marquees shall be permitted as exceptions to the requirements relating to permitted obstructions in Section 37-50.

Special dimensional requirements for arcades and sidewalk widenings along designated #streets# are set forth in Section ~~81-43 (Street Wall Continuity Along Designated Streets)~~ 37-53 (Design Standards for Pedestrian Circulation Spaces). Where a new #building# or #enlarged# portion of an existing #building# provides an arcade, no obstructions, including columns, shall be permitted within such arcade, and the maximum height of such arcade shall be 20 feet and the maximum

width shall be 10 feet. Arcades or sidewalk widenings shall not be permitted on 34th Street, 42nd Street, 57th Street or Fifth Avenue frontages or on any #street# frontage within the Preservation Subdistrict. Between 43rd and 50th Streets, no arcades shall be permitted parallel to and along Seventh Avenue or Broadway.

* * *

81-46
Off-Street Relocation or Renovation of a Subway Stair

Where a #development# or #enlargement# is constructed on a #zoning lot# that contains at least 5,000 square feet of #lot area# and fronts on a sidewalk containing a stairway entrance or entrances into a subway station, the existing entrance or entrances shall be relocated from the #street# onto the #zoning lot#. The new entrance or entrances shall be provided in accordance with the provisions of Section 37-40 (OFF-STREET RELOCATION OR RENOVATION OF A SUBWAY STAIR). A relocated or renovated subway stair may be counted as pedestrian circulation space in accordance with the provisions of Section 37-50.

The subway stations where such improvements are required are listed in the following table and shown on Map 3 (Subway Station Improvement Areas) in Appendix A.

Station	Line
34th St.-Penn Station	Broadway-7th Ave. ~~IRT~~
34th St.-Penn Station	8th Ave. ~~IND~~
34th St.-Herald Square	6th Ave.~~IND~~/Broadway-60th St. ~~BMT~~
~~42nd Street~~	~~8th Ave. IND~~
42nd St.-Times Square/42nd St.-Port Authority Bus Terminal	Broadway-7th Ave. ~~IRT~~/ Broadway ~~BMT~~/8th Ave./42nd St. Shuttle
42nd Street-Bryant Park/Fifth Ave.	6th Ave. ~~IND~~/Flushing
42nd St.-Grand Central	Lexington Ave.~~IRT~~/Flushing/42nd St Shuttle
47th-50th St.-Rockefeller Center	6th Ave. ~~IND~~
49th Street	Broadway-60th St.~~BMT~~
50th Street	8th Ave.~~IND~~
50th Street	Broadway-7th Ave. ~~IRT~~
~~51st Street~~	~~Lexington Ave. IRT~~
7th Ave. ~~(53rd St.)~~	~~6th Ave. IND~~53rd St.
Fifth Ave.-~~(~~53rd St.~~)~~	53rd St.~~Queens IND~~
51st St./Lexington Ave.-~~3rd Ave (~~53rd St.~~)~~	53rd St./Lexington Ave.~~Queens IND~~
57th Street	Broadway-60th St.~~BMT~~
57th Street	6th Ave.~~IND~~
59th St.-Columbus Circle	Broadway-7th Ave. ~~IRT~~/8th Ave.~~IND~~

* * *

81-47
Major Building Entrances

In order to limit pedestrian traffic congestion on #zoning lots# with at least 20,000 square feet of #lot area#, the following restrictions apply to ~~#developments#~~ #buildings developed# after May 13, 1982, as described in paragraphs (a) and (b) of this Section, except as provided in paragraph (c) in this Section. For the purposes of this Section, the major entrance to a #building# shall be that entrance to the main lobby of the #building# which has the greatest aggregate width of clear openings for access.

* * *

81-48
Off-street Improvement of Access to Rail Mass Transit Facility

An off-street rail mass transit access improvement shall provide a new point of unobstructed off-street public access to a rail mass transit station or facility. It shall immediately adjoin, and be accessible without any obstruction from an arcade, a building entrance recess area, a corner arcade, a corner circulation space, a public sidewalk, a sidewalk widening or a #public plaza#, each of which shall have a minimum horizontal dimension equal to the width of the rail mass transit access improvement. The rail mass transit access improvement may be provided within a #building# but shall not be enclosed by any doors. The area it occupies within a #building# shall not be counted toward the #floor area# of the ~~#development# or #enlargement#~~ #zoning lot#.

The Chairperson of the City Planning Commission may certify that an off-street rail mass transit access improvement satisfies the requirements of Section 81-45 (Pedestrian Circulation Space), provided that such improvement is approved by the entity which operates the mass transit station or facility and meets the following standards:

* * *

81-50
SPECIAL REGULATIONS FOR THE PENN CENTER SUBDISTRICT

* * *

81-53
Special Bulk and Urban Design Requirements

In addition to the requirements set forth in Sections 81-25 (General Provisions Relating to Height and Setback of Buildings) and 81-40 (MANDATORY DISTRICT PLAN ELEMENTS), the provisions of this Section shall apply to a ~~#development# or #enlargement~~ #zoning lot# having 50 percent or more of its ~~#zoning~~ lot area# within the Penn Center Subdistrict. For the purposes of this Section, all such #zoning lots# shall be deemed to be entirely within the Subdistrict. If any of the provisions of Sections 81-25, 81-40 and 81-53 are in conflict, the regulations of this Section shall govern.

* * *

81-532
Special street wall requirements

The provisions of Section 81-43 (Street Wall Continuity along Designated Streets) shall apply, except ~~shall be modified to require~~ that the ~~front building wall~~ #street wall# of all ~~#developments# and #enlargements#~~ #buildings# along the Seventh Avenue frontage of #zoning lots# shall be a minimum of 85 feet above #curb level# or the full height of the #building#, whichever is less. All other provisions of 81-43 shall apply without modification.

In addition, the restrictions on permitted recesses contained in Section 81-43 shall not apply to pedestrian circulation spaces provided in accordance with Sections 81-46 (Off-Street Relocation or Renovation of a Subway Stair) or 81-48 (Off-Street Improvement of Access to Rail Mass Transit Facility) nor to interstitial spaces between #signs# or between building walls and #signs#.

81-54
Floor Area Bonus in the Penn Center Subdistrict

81-541
Rail mass transit facility improvement

In addition to the provisions of Section 81-29 (Incentives by Special Permit for Provisions of Public Amenities), the City Planning Commission may grant #floor area# bonuses for subway station and rail mass transit facility improvements for #non-#residential# or #mixed buildings#, in accordance with Section 74-634 (Subway station improvements in commercial zones of 10 FAR and above in Manhattan), and may modify or waive the provisions of Section 81-43 (Street Wall Continuity Along Designated Streets) in accordance with the provisions of Section 74-634, provided that such improvement is approved by the entities which own and/or operate the rail mass transit facility.

For the purposes of this Section, improvements to any rail mass transit facility within the Subdistrict qualifies for bonus #floor area# in accordance with the provisions of Section 74-634, as modified herein.

* * *

81-60
SPECIAL REGULATIONS FOR THE GRAND CENTRAL SUBDISTRICT

81-61
General Provisions

In order to preserve and protect the character of the Grand Central Subdistrict, as well as to expand and enhance the Subdistrict's extensive pedestrian network, special regulations are set forth governing urban design and streetscape relationships, the transfer of development rights from landmarks, and the improvement of the surface and subsurface pedestrian circulation network.

The regulations of Sections 81-60 (SPECIAL REGULATIONS FOR THE GRAND CENTRAL SUBDISTRICT) are applicable only in the Grand Central Subdistrict, the boundaries of which are shown on Map 1 (Special Midtown District and Subdistricts) in Appendix A. These regulations supplement or modify the provisions of this Chapter applying generally to the #Special Midtown District#, of which this Subdistrict is a part.

As stated in Section 81-212, transfer of development rights from landmark sites may be allowed pursuant to Section 81-63.

The provisions of Section 81-23 (Floor Area Bonus for Public Plazas) are inapplicable to any ~~#development# or #enlargement#~~ #zoning lot#, any portion of which is located within the Grand Central Subdistrict.

81-62
Special Bulk and Urban Design Requirements

In addition to the requirements set forth in Section 81-25 (General Provisions Relating to Height and Setback of Buildings) and Section 81-40 (MANDATORY DISTRICT PLAN ELEMENTS), the provisions of this Section shall apply to a ~~#development# or #enlargement#~~ #zoning lot# having 50 percent or more of its ~~#zoning lot# area~~ #lot area# within the Grand Central Subdistrict. For the purposes of this Section, all such #zoning lots# shall be deemed to be entirely within the Subdistrict. If any of the provisions of Sections 81-25, 81-40 and 81-62 are in conflict, the regulations of this Section shall govern.

81-621
Special street wall requirements

The requirements of Section 81-43 (Street Wall Continuity Along Designated Streets) shall be applicable within the Subdistrict, except as modified in this Section 81-621.

~~that the #street wall# of any #development# or #enlargement# within the Subdistrict shall be~~ #Buildings# with frontage on ~~within 10 feet of the #street line# of~~ Park, Lexington, Madison and Vanderbilt Avenues or ~~of~~ Depew Place shall have a #street wall# within 10 feet of the #street line# of such #streets#.

On 42nd Street, the #street wall# shall be at the #street line#. The ~~length~~ width of the required #street wall# shall be at least 80 percent of the length of the #front lot line#. The minimum height of such #street walls# without any setback shall be 120 feet above #curb level# or the height of the #building#, whichever is less, and the maximum height shall not exceed 150 feet above #curb level#. Where a #zoning lot# is bounded by the intersection of Park, Lexington, Madison and Vanderbilt Avenues, 42nd Street or Depew Place and any other #street#, these #street wall# height regulations shall apply along the full length of the #zoning lot# along the other #street# or to a distance of 125 feet from the intersection, whichever is less.

Beyond 125 feet from the intersection, the maximum height of the #street wall# above #curb level# shall not exceed 120 feet. For such #building# ~~#development# or #enlargement#~~, the provisions of Section 81-262 (Maximum height of front wall at the street line) shall not be applicable.

However, the ten foot setback requirement of Section 81-263 paragraph (a) shall apply only to those portions of the #building# above this height.

81-622
Special height and setback requirements

~~All #developments# or #enlargements# w~~Within the Subdistrict ~~shall be subject to~~ the provisions of Sections 81-26 (Height and Setback Regulations-Daylight Compensation) or 81-27 (Alternate Height and Setback Regulations-Daylight Evaluation) shall apply to all #buildings# on a #zoning lot# except that:

(a) ~~if the applicant of a #development# or #enlargement# elects to be~~ where such #buildings# are governed by Section 81-26 (Height and Setback Regulations-Daylight Compensation), no #compensating recess# shall be required for the #encroachment# of that portion of the #building# below 150 feet above #curb level#; or

(b) ~~if the applicant of a #development# or #enlargement# elects to be~~ where such #buildings# are governed by Section 81-27 (Alternate Height and Setback Regulations-Daylight Evaluation), the computation of daylight evaluation shall not include any daylight blockage, daylight credit, profile daylight blockage or available daylight for that portion of the #building# below 150 feet above #curb level#. However, the passing score required pursuant to paragraph (i) of Section 81-274 shall apply.

81-623
Building lobby entrance requirements

For #buildings developed# or #enlarged# on the ground floor after August 26, 1992, ~~B~~building lobby entrances ~~for #developments# or #enlargements#~~ shall be required on each #street# frontage of the #zoning lot# where such #street# frontage is greater than 75 feet in length, except that if a #zoning lot# has frontage on more than two #streets#, building entrances shall be required only on two #street# frontages. Each required building entrance shall lead directly to the building lobby. #Buildings developed# from May 13, 1982 to August 25, 1992 shall be subject to the provisions of Section 81-47 (Major Building Entrances).

Required building entrances on opposite #street# frontages shall be connected directly to the building lobby by providing a through #block# connection in accordance with paragraph (h) of Section 37-53 (Design Standards for Pedestrian Circulation Spaces), except that such through #block# connection shall be located at least 50 feet from the nearest north/south #wide street#.

Each required building entrance shall include a building entrance recess area, as defined in paragraph (b) of Section 37-53, except that for #developments# or #enlargements# with frontage on Madison or Lexington Avenues or 42nd Street, the ~~length~~ width of a building entrance recess area shall not be greater than 40 feet parallel to the #street line# and there may be only one building entrance recess area on each such #street# frontage.

* * *

81-625
Pedestrian circulation space requirements

Any #development# or #enlargement# within the Grand Central Subdistrict shall be subject to the provisions of Sections 81-45 (Pedestrian Circulation Space), 81-46 (Off-Street Relocation or Renovation of a Subway Stair) and 81-48 (Off-Street Improvement of Access to Rail Mass Transit Facility), except that:

(a) no arcade shall be allowed ~~for any #development# or #enlargement#~~ within the Subdistrict; and

(b) within the Subdistrict, a sidewalk widening may be provided only for a #building# ~~#development# or #enlargement#~~ occupying an Avenue frontage, provided that such sidewalk widening extends for the length of the full #block# front.

* * *

81-63
Transfer of Development Rights from Landmark Sites

* * *

81-632
Conditions and limitations

The transfer of development rights from a “granting lot" to a “receiving lot" pursuant to Section 81-63 shall be subject to the following conditions and limitations:

(a) the maximum amount of #floor area# that may be transferred from a "granting lot" shall be the maximum #floor area# allowed by Section 33-12 for #commercial buildings# on such landmark #zoning lot#, as if it were undeveloped, less the total #floor area# of all existing #buildings# on the landmark #zoning lot#;

(b) for each “receiving lot", the #floor area# allowed by the transfer of development rights under Section 81-63 shall be in addition to the maximum #floor area# allowed by the district regulations applicable to the "receiving lot" as shown in Section 81-211; and

(c) each transfer, once completed, shall irrevocably reduce the amount of #floor area# that may be #developed# or #enlarged# on the "granting lot" by the amount of #floor area# transferred. If the landmark designation is removed, the landmark #building# is destroyed or #enlarged#, or the “landmark lot" is redeveloped, the "granting lot" may only be #developed# or #enlarged# up to the amount of permitted #floor area# as reduced by each transfer.

81-633
Transfer instruments and notice of restrictions

The owners of the “granting lot" and the “receiving lot" shall submit to the City Planning Commission a copy of the transfer instrument legally sufficient in both form and content to effect such a transfer. Notice of the restrictions upon further #development# or #enlargement# of the “granting lot" and the “receiving lot" shall be filed by the owners of the respective lots in the Office of the Register of the City of New York (County of New York), a certified copy of which shall be submitted to the City Planning Commission.

Both the instrument of transfer and the notice of restrictions shall specify the total amount of #floor area# transferred and shall specify, by lot and block numbers, the lots from which and the lots to which such transfer is made.

* * *

81-635
Transfer of development rights by special permit

* * *

A special permit for the transfer of development rights to a “receiving lot" shall be subject to the following findings:

(1) that a program for the continuing maintenance of the landmark has been established;

(2) that the improvement to the surface and subsurface pedestrian circulation network provided by the #development# or #enlargement# increases public accessibility to and from Grand Central Terminal pursuant to the following requirements:

* * *

(ii) that the modification of #bulk# regulations, regulations governing #zoning lots# divided by district boundaries or the permitted transfer of #floor area# will not unduly increase the #bulk# of any ~~new~~ #development# or #enlargement# on the “receiving lot," density of population or intensity of #use# on any #block# to the detriment of the occupants of #buildings# on the #block# or the surrounding area;

* * *

(iv) that, for #developments# or #enlargements# on #zoning lots# of more than 40,000 square feet of #lot area# that occupy an entire #block#, modifications of #bulk# regulations are necessary because of inherent site constraints and that the modifications are limited to the minimum needed.

* * *

81-70
SPECIAL REGULATIONS FOR THEATER SUBDISTRICT

* * *

81-72
Use Regulations Modified

The #use# regulations of this Section 81-72, inclusive, shall apply within ~~Within~~ that portion of the Theater Subdistrict bounded by West 40th Street, a line 100 feet east of Eighth Avenue, West 51st Street and a line 200 feet west of Avenue of the Americas, ~~#uses#~~ to #buildings developed# after May 13, 1982, to portions of #buildings enlarged# on the ground floor level after May 13, 1982, and to #extensions# ~~which are created by #development#, or which are #enlarged# or #extended#, shall be subject to the provisions of this Section~~.

* * *

81-724
Requirements for entertainment-related uses

With the exception of a #development# or #enlargement# in which more than 50 percent of the new #floor area# is allocated to #transient hotel use#, or all of the #floor area# of the #development# or #enlargement# is allocated to #public parking garage use#, a #development# or #enlargement# on a #zoning lot# with more than 50 percent of its #zoning lot# area located within the Theater Subdistrict Core shall meet the following requirements:

(a) If the new #floor area# of the #development# or #enlargement# generated by that portion of the #zoning lot# located within the Theater Subdistrict Core exceeds 60,000 square feet, then an amount of floor space on the #zoning lot# equal to five percent of the amount by which ~~the~~ such new #floor area# ~~generated by that portion of the #zoning lot# located within the Theater Subdistrict Core~~ exceeds 50,000 square feet shall be allocated to #uses# listed in Section 81-725 (Entertainment-related uses) or #front lot line# ground level #uses# designated thus (***) in Section 81-722 (Use Group T) as satisfying the requirements of this Section.

* * *

(c) Except as provided in this paragraph, (c), floor space allocated to entertainment-related #uses# listed in Section 81-725, accommodating any number of occupants, shall be classified under Sections 27-254 to 27-258 (Title 27, Chapter 1, Subchapter 3, Article 8 - Occupancy Group F-Assembly) of the 1968 Building ~~Administrative~~ Code or Section BC 303 of the 2008 Building Code, as applicable, and shall meet all relevant requirements of Sections 27-522 to 27-549 (Title 27, Chapter 1, Subchapter 8-Places of Assembly) of ~~that~~ the 1968 Building Code or Section BC 1024 of the 2008 Building Code, as applicable.

* * *

(f) If a certificate of occupancy for floor space to be located on a separate #zoning lot#, pursuant to the provisions of paragraph (b) of this Section, is not reasonably anticipated to be issued prior to the date upon which the #development# or #enlargement# would otherwise be eligible for issuance of a certificate of occupancy, the Commission may also authorize the waiver of any or all of the provisions of paragraphs (b)(3), (d) and (e) of this Section, provided that:

(1) the owner or lessee of the #development# or #enlargement#, or an affiliate thereof, will make or cause to be made a financial contribution, through payment or repayment of the costs thereof, which will facilitate ~~the #development#~~ on such separate #zoning lot#, the development of a #building# that will consist predominantly of either entertainment-related #uses# and #uses# accessory thereto or #community facility# #uses# where at least 25,000 square feet of such floor space allocated to meet the requirements of this Section shall be allocated in its entirety to studios (music, dancing or theatrical), a theater designed and arranged for live performances of drama, music or dance, or a combination thereof, and any support spaces related thereto not including administrative office space;

* * *

(4) the prospective operator of the entertainment-related #uses# in the #building# on such separate #zoning lot#:

(i) has made substantial financial and construction-related commitments towards the ~~#~~ development ~~#~~ of the #building#, including, at a minimum, commitments for site acquisition, such as a purchase agreement, deed or ground lease, and architectural agreements for the design of the floor space; and

(ii) has secured, or has implemented a fund-raising plan to secure, the funding

necessary for the #~~-~~development~~-~~# of the #building#, other than the financial contribution by the owner or lessee of the #development# or #enlargement#.

* * *

(h) Floor space allocated in an existing #building# on a separate #zoning lot#, pursuant to an authorization granted under paragraph (f) of this Section, may be reallocated to another location, provided that the Commission finds, by authorization, that all applicable requirements of this Section are met, except that no floor space allocated in an existing #building# located within the Theater Subdistrict may be reallocated to another location outside the Theater Subdistrict.

(i) All #uses# satisfying the requirements of this Section shall be subject to the locational requirements of Section 81-72 (Use Regulations Modified).

* * *

81-73
Special Sign and Frontage Regulations

81-731
Special regulations for signs, transparency, banners and canopies

Within that area of the Theater Subdistrict whose boundaries are described in Section 81-72 (Use Regulations Modified), the following provisions apply along #wide street# frontages. Within the Theater Subdistrict Core the following provisions also apply along #narrow street# frontages.

(a) At least 50 percent of the #street wall# ~~surface~~ of a #development# or ground floor #enlargement# shall be glazed at the ground floor level with clear, untinted, transparent material and not more than 50 percent of such transparent surface shall be painted or obstructed with #signs#.

For the purpose of the glazing requirements, the ~~building's~~ #street wall# surface at the ground floor level shall be measured from the floor to the height of the ceiling or 14 feet above grade, whichever is less, and shall exclude any area of #street wall# occupied by #accessory# off-street loading berths or #accessory# off-street parking required under provisions of Section 81-30 (OFF-STREET PARKING AND OFF-STREET LOADING REGULATIONS). For the purposes of this Section, clear, unobstructed openings in the surface of a #street wall# provided for a stairway entrance into a subway relocated onto a #zoning lot# in accordance with the requirements of Section 81-46 (Off-Street Relocation or Renovation of a Subway Stair) or a through #block# connection provided in accordance with the requirements of paragraph (h) of Section 37-53 (Design Standards for Pedestrian Circulation Spaces) shall be treated as transparent glazed surfaces.

(b) Canopies (as defined in ~~Chapter 1 of Title 19 of the Administrative~~ the Building Code) and awnings shall not be permitted on the exterior of any #building# ~~#development#~~.

For the purposes of this Section, any #signs# which do not comply with the above regulations may be continued for one year after May 13, 1982, provided that after the expiration of that period such #non-conforming sign# shall terminate; a #sign# which the Chairperson of the City Planning Commission certifies as an integral part of the #building# shall not be required to terminate.

81-732
Special Times Square signage requirements

* * *

(a) All ~~new~~ #developments# located on #zoning lots# between 43rd and 50th Streets with #street# frontage on Seventh Avenue and/or Broadway shall provide #signs# meeting all of the following requirements:

* * *

(3) In addition, #illuminated signs# shall be provided with a minimum aggregate #surface area# of 50 square feet for each linear foot of #street# frontage of the #zoning lot# on Seventh Avenue, Broadway and intersecting #narrow streets# up to the first 40 linear feet of #street# frontage from either Broadway or Seventh Avenue, except that for any one #zoning lot#, the required minimum aggregate #surface area# shall not exceed 12,000 square feet.

No portion of any #illuminated sign# required under this paragraph, (a)(3), shall be located:

* * *

(v) The provisions of paragraphs (a)(3)(iii) and (iv) may be modified or waived upon certification by the Chairperson of the City Planning Commission that the dynamic character and attractiveness of the #sign# or #signs# for which the modification or waiver is granted are assured by the proposed design and operation and that the signage on the ~~#development# as a whole~~ #zoning lot# will produce an effect at least equal to that achieved through the application of paragraphs (a)(3)(iii) and (iv).

* * *

(b) For #enlargements# which add #floor area# amounting to a #floor area ratio# of at least 1.0, the #sign# requirements of this Section shall apply as follows:

(1) If the #enlargement# involves an increase in #floor area#, minimum aggregate #surface areas# of required #signs# shall be determined in the same manner as for ~~new~~ #developments# on the basis of the length of the #zoning lot's# frontage as set forth in paragraphs (a)(2), (a)(3) and (a)(6).

(2) All other requirements for #signs# required for #enlargements# shall be as provided for ~~new~~ #developments# in paragraphs (a)(1), (a)(2), (a)(3), (a)(4), (a)(5) and (a)(7).

(3) The provisions of paragraphs (a)(1) or (2) may be modified or waived upon certification by the Chairperson of the City Planning Commission that such modification or waiver results from compelling necessity.

* * *

81-733
Special provisions for central refuse storage area

For all ~~new~~ #buildings# or ~~#enlarged#~~ portions of ~~existing~~ #buildings# #developed# or #enlarged# after May 13, 1982, and located within the Theater Subdistrict, facilities shall be provided for central refuse storage within the #building#, and no refuse shall be stored outside the #building#.

In all cases there shall be an area for central refuse storage provided at the rate of 75 square feet for non-compressed refuse or 50 square feet for compressed refuse for each 10,000 square feet of #lot area#. Such area shall be ventilated.

For carting purposes, such central storage area shall be directly accessible on a 24-hour basis to loading berths, where provided, or to the exterior of the #building#. Furthermore, the central storage area shall be accessible at all times to all #uses# occupying space within the #building#.

Such area shall be exempt from calculation for #floor area# as defined in Section 12-10 (DEFINITIONS).

81-74
Special Incentives and Controls in the Theater Subdistrict

81-741
General provisions

(a) Certifications

(1) The transfer of development rights from any "granting site" in accordance with the provisions of Section 81-744 (Transfer of development rights from listed theaters) shall be permitted upon certification by the City Planning Commission.

(2) In the Theater Subdistrict, modifications of the provisions of Article VII, Chapter 7 (Special Provisions for Zoning Lots Divided by District Boundaries), in accordance with the provisions of Section 81-746 (Additional provisions for zoning lots divided by district or subdistrict core boundaries) shall be permitted upon certification of the Chairperson of the City Planning Commission.

* * *

(d) Additional floor area bonuses

All #developments# or #enlargements# located on the west side of Eighth Avenue between 42nd and 45th Streets within the Theater Subdistrict may receive an increase in #floor area# pursuant to Section 96-22 (Special Regulations for Eighth Avenue Perimeter Area) for those #developments# or #enlargements# complying with the provisions of Section 23-90 (INCLUSIONARY HOUSING).

* * *

81-742
Listed theaters

(a) Designation of listed theaters

* * *

(b) Restrictions on demolition of listed theaters

No demolition permit shall be issued by the Department of Buildings for any theater listed in this Section as a "listed theater," unless:

(1) it is an unsafe #building# and demolition is required pursuant to the provisions of Title 28, Article 216 ~~Section 26-127 of Title 26, Chapter 1~~, of the New York City Administrative Code;

* * *

(c) Special permit for demolition of listed theaters

* * *

(4) that the applicant's plans, if any, for replacement of the theater structure with a #development# or #enlargement# contain replacement #uses# supportive of the character of the Theater Subdistrict.

* * *

81-743
Required assurances for continuance of legitimate theater use

* * *

(b) a licensed engineer's and/or architect's report certifying either that the theater is physically and operationally sound so as to permit its use as a legitimate theater or, if it is determined that the theater is not physically or operationally sound, a plan and program for the upgrade of the theater to put it in condition of physical and operational soundness. For the purposes of this Section, physical and operational soundness shall include the structural integrity of the exterior and interior elements of the #building# to the extent that they relate to the theater, compliance with applicable electrical and fire safety codes, and compliance with applicable building code standards.

* * *

(e) a legal commitment for continuance of its #use# as a legitimate theater for the life of the related #development# or #enlargement#.

* * *

81-744
Transfer of development rights from listed theaters

For the purposes of the Theater Subdistrict:

* * *

(a) Transfer of development rights by certification

* * *

(2) each transfer, once completed, irrevocably reduces the amount of #floor area# that may be #developed# or #enlarged# on the #zoning lot# containing the "granting site" by the amount of #floor area# transferred;

* * *

(b) Transfer of development rights by authorization

The City Planning Commission shall allow, by authorization, an additional transfer of development rights beyond the amount of #floor area# transfer permitted by certification in paragraph (a) of this Section from a "granting site" to any portion of a "receiving site" located within the Eighth Avenue Corridor, except that any "granting site," or portion thereof, located outside the Theater Subdistrict may not transfer development rights to any portion of a "receiving site" within the Special Clinton District, subject to the following conditions:

(1) the maximum amount of such additional #floor area# transfer to that portion of a "receiving site" located within such Corridor shall not exceed the maximum total FAR with as-of-right #floor area# allowances in the Theater Subdistrict set forth in Section 81-211 by more than 20 percent; and

(2) such transfer complies with the conditions and limitations set forth for the transfer of development rights in paragraph (a) of this Section.

In order to grant such authorization, the City Planning Commission shall find that such #development# or #enlargement#:

* * *

(c) Requirements for Application

* * *

(2) a copy of the transfer instrument legally sufficient in both form and content to effect such a transfer, together with a notice of the restrictions limiting further #development# or #enlargement# of the "granting site" and the "receiving site." The notice of restrictions shall be filed by the owners of the respective lots in the Borough Office of the Register of the City of New York, indexed against the "granting site" and the "receiving site," a certified copy of which shall be submitted to the Chairperson of the City Planning Commission. Receipt of the certified copy shall be a pre-condition to issuance of any building permit, including any foundation or alteration permit, for any #development# or #enlargement# on the "receiving site."

* * *

81-745
Floor area bonus for rehabilitation of existing listed theaters

The City Planning Commission by special permit may authorize bonus #floor area# for substantial rehabilitation or restoration of any theater listed as a "listed theater" in Section 81-742 (Listed theaters), in accordance with the provisions of this Section.

(a) Conditions for rehabilitation bonus

As a condition for the issuance of a special permit under the provisions of this Section, the following requirements shall be satisfied:

(1) Location of development

The #development# or #enlargement# for which a theater rehabilitation bonus is granted is located on the same #zoning lot# as the "listed theater."

(2) Qualification of substantial rehabilitation

* * *

(b) Amount of rehabilitation bonus

The amount of bonus #floor area# granted for a qualifying theater rehabilitation shall be at the discretion of the City Planning Commission after consideration of the following findings:

(1) how and to what extent the proposed rehabilitation will improve the theater's suitability for #use# as a legitimate theater;

(2) how the proposed rehabilitation will contribute toward satisfying the needs of the Theater Subdistrict;

(3) whether the bonus #floor area# will unduly increase the bulk of any ~~new~~ #development# or #enlargement#, density of population or intensity of #use# on any #block# to the detriment of occupants of #buildings# on the #block# or the surrounding area; and

(4) whether the distribution and location of such #floor area# bonus will adversely affect the surrounding area by restricting light and air or otherwise impair the

essential character or future ~~#development#~~ development of the surrounding area.

Such bonus #floor area# shall not exceed 20 percent of the basic maximum #floor area# permitted on the ~~#development's~~ zoning lot# containing the #development# or #enlargement# by the regulations of the underlying district, except that in the case of an underlying C6-4, C6-5 or M1-6 District, the bonus #floor area# shall not exceed 44 percent of the basic maximum #floor area# permitted in such underlying district.

For purposes of applying the provisions of Section 11-42 (Lapse of Authorization or Special Permit by the City Planning Commission Pursuant to the 1961 Zoning Resolution) to a special permit granted pursuant to this Section, "substantial construction" shall mean substantial rehabilitation, as described in paragraph (b) of this Section, of the subject theater for which a #floor area# bonus has been granted to a related #development# or #enlargement#.

The Commission may prescribe appropriate conditions and safeguards to minimize adverse effects on the character of the surrounding areas.

81-746
Additional provisions for zoning lots divided by district or subdistrict core boundaries

(a) For any #zoning lot# which includes a "listed theater" as set forth in Section 81-742 (Listed theaters) or is or contains a "receiving site" pursuant to Section 81-744 (Transfer of development rights from listed theaters), and which is divided by a boundary between districts with different basic maximum #floor area ratios# as set forth in Section 81-211 (Maximum floor area ratio for non-residential or mixed buildings), the Chairperson of the City Planning Commission, by certification, shall allow modifications of the provisions of Sections 77-02 (Zoning Lots Not Existing Prior to Effective Date or Amendment of Resolution), 77-21 (General Provisions), 77-22 (Floor Area Ratio) and 77-25 (Density Requirements), as follows.

* * *

Notice of the restrictions upon further ~~#development#~~ development of each portion of the #zoning lot# shall be recorded by the owner against the #zoning lot# in the Office of the Register of the City of New York (County of New York) and a certified copy shall be submitted to the Commission.

* * *

81-747
Transfer of development rights from landmark theaters

The City Planning Commission by special permit may authorize development rights to be transferred from #zoning lots# occupied by landmark #buildings# to other #zoning lots# proposed for ~~new~~ #developments# or #enlargements# in accordance with the provisions of Section 74-79 (Transfer of Development Rights from Landmark Sites), as modified by this Section and by Section 81-212 (Special provisions for transfer of development rights from landmark sites).

The limitations on development rights transferred to #development# sites from landmark sites, including sites of landmark theaters, are set forth in Section 81-212.

In the case of landmarks which are theaters and which are located in the Theater Subdistrict, in addition to the modifications set forth in Section 81-212, the provisions of Section 74-79 are modified as follows:

* * *

(c) The provisions of paragraph (c) of Section 74-792 are further modified to provide that in any underlying district within the Theater Subdistrict, the "adjacent lot" may be

#developed# or #enlarged# with either a #commercial# or a #mixed building#.

Where development rights are proposed to be transferred and exercised in accordance with the provisions of Section 74-79, as modified by this Section, the Commission, in addition to the findings required in paragraph (e) of Section 74-792, shall find that:

* * *

81-75
Special Street Wall and Setback Requirements

~~#Developments# or #enlargements#~~ #Buildings# located on #zoning lots# or portions of #zoning lots# within the Theater Subdistrict Core or the Eighth Avenue Corridor shall comply with the regulations of this Section. The height of all #buildings or other structures# shall be measured from #curb level#.

81-751
Special street wall and setback regulations within the Theater Subdistrict Core

~~#Developments# or #enlargements#~~ #Buildings# located on #zoning lots# between 43rd and 50th Streets with #street# frontage on Seventh Avenue and/or Broadway, or located partially within the Theater Subdistrict Core and partially within the Eighth Avenue Corridor shall comply with the requirements of this Section and, in all other respects related to height and setback, with the provisions of Sections 81-25 (General Provisions Relating to Height and Setback of Buildings), and either Section 81-26 (Height and Setback Regulations - Daylight Compensation) or 81-27 (Alternate Height and Setback Regulations - Daylight Evaluation). The #street wall# location rules of Section 81-43 shall also apply, except as modified in this Section.

With the exception of #signs# and parapets not exceeding four feet in height, no obstructions are permitted to penetrate the mandatory #street wall# height limits or setback requirements for #zoning lots# between 43rd and 50th Streets with #street# frontage on Seventh Avenue and/or Broadway set forth in this Section.

For the purposes of this Section, #signs# are permitted as exceptions to the special #street wall# and setback requirements contained herein, except that above the top of a #street wall# before setback required under this Section no #sign# may be located closer than six feet to the Seventh Avenue or Broadway #street wall# before setback. #Signs# located below the top of a required #street wall# before setback as defined in this Section may project across a #street line# up to ten feet. Marquees are not subject to the requirements of this Section.

(a) With the exception of #buildings# located on #zoning lots# between Seventh Avenue and Broadway, ~~#developments# or #enlargements#~~ #buildings# located on #zoning lots# between 43rd and 50th Streets with #street# frontage on Seventh Avenue or Broadway shall meet the following requirements:

(1) The #street walls# of any ~~such~~ #building# shall have a minimum #street wall# height before setback of 50 feet above #curb level# and a maximum #street wall# height before setback of 60 feet above #curb level# on all #street# frontages, except that:

(i) if the #zoning lot# contains a complete #wide street block# frontage, #wide street street walls# within 25 feet of the #street line# of a #narrow street# and #narrow street street walls# shall have a minimum #street wall# height before setback of 30 feet above #curb level#; and/or

(ii) if the #zoning lot# contains a theater listed in the table in Section 81-742 (Restrictions on demolition of theaters) and the theater is retained as part of a #development# or #enlargement#, the maximum #street wall# height above #curb level# before setback of a #narrow street street wall# which is a reconstruction or replacement of an existing #narrow street street wall#

of the theater shall be equal to the height above #curb level# of that existing theater #street wall# and the same maximum #street wall# height above #curb level# shall apply only for the ~~length~~ width of that existing theater #street wall#.

(2) Above the required #street wall# height before setback, the #street wall# of any ~~such~~ #building# shall be set back at least 15 feet along all #narrow street# frontages of the #zoning lot#.

(3) For #zoning lots# greater that 15,000 square feet in area:

(i) Above the required #street wall# height before setback, the #street wall# of any ~~such~~ #building# shall be set back at least 50 feet along the Seventh Avenue or Broadway #street# frontage of the #zoning lot#.

* * *

(4) For #zoning lots# 15,000 square feet in area or less, above the required #street wall# height before setback, the #street wall# of any ~~such~~ #building# shall be set back at least 35 feet along the Seventh Avenue or Broadway #street# frontage of the #zoning lot#.

* * *

81-752
Special street wall and setback regulations within the Eighth Avenue Corridor

~~#Developments# or #enlargements#~~ #Buildings# on #zoning lots# located in whole or in part within the Eighth Avenue Corridor, as defined in Section 81-71, and east of Eighth Avenue shall comply with the requirements of this Section, and except as superseded by this Section, with the provisions of Section 81-25 (General Provisions Relating to Height and Setback of Buildings), and either Section 81-26 (Height and Setback Regulations - Daylight Compensation) or 81-27 (Alternate Height and Setback Regulations - Daylight Evaluation).

~~#Developments# or #enlargements#~~ #Buildings# on #zoning lots# located in whole or in part within the Eighth Avenue Corridor, as defined in Section 81-71, and west of Eighth Avenue shall comply with the requirements of this Section. The provisions of Sections 81-25, 81-26 and 81-27 shall not apply.

The provisions of paragraphs (a) and (b) of this Section shall apply to #developments#, #enlargements# and alterations where such alterations change the height, width or location of a #street wall#.

(a) Street wall location and minimum and maximum heights before setbacks

(1) On Eighth Avenue and 42nd Street, #street walls# shall extend along the entire #street# frontage of the #zoning lot# not occupied by existing #buildings# to remain and shall rise to a minimum height of 50 feet or the height of the #building#, whichever is less. At least 70 percent of the ~~# aggregate~~ width of such #street walls# shall be located on the #street line#, and the remaining 30 percent ~~of the #aggregate width of street walls#~~ may be located beyond the #street line# in compliance with #residential outer court# regulations for #residential# portions of #buildings# and #community facility outer court# regulations for all other portions of #buildings#. However, within 30 feet of the intersection of two #street lines#, #street walls# shall comply with the location requirements of paragraph (a)(3) of this Section. The maximum height of #street walls# within 10 feet of the #wide street line# shall be 150 feet beyond 15 feet of a #narrow street line# and 85 feet within 15 feet of a #narrow street line#.

(2) On a #narrow street# east of Eighth Avenue, and on a #narrow street# west of and within 100 feet of Eighth Avenue, #street walls# shall extend along the entire

width of such #narrow street# frontage of the #zoning lot# not occupied by existing #buildings# to remain and shall rise to a minimum height of 50 feet or the height of the #building#, whichever is less. At least 70 percent of the ~~# aggregate~~ width of such #street walls# along such #narrow street# frontage shall be located on the #street line#, and the remaining 30 percent ~~of the #aggregate width of street walls#~~ may be located beyond the #street line# in compliance with #residential outer court# regulations for #residential# portions of #buildings# and #community facility outer court# regulations for all other portions of #buildings#. However, within 30 feet of the intersection of two #street lines#, #street walls# shall comply with the location requirements of paragraph (a)(3) of this Section. The maximum height of #street walls# within 15 feet of the #narrow street line# shall be 85 feet.

~~No #street walls# are required along~~ On a #narrow street# west of and beyond 100 feet of Eighth Avenue, the maximum height of #street walls# within 15 feet of the #narrow street line# shall be 66 feet, except in accordance with paragraphs (b) or (c)(3) of this Section. However, no #street wall# need be provided where ~~provided~~ at least 70 percent of the entire frontage of the #zoning lot# along such #narrow street# is occupied by #street walls# located on the #street line#. ~~The maximum height of #street walls# within 15 feet of the #narrow street line# shall be 66 feet, except in accordance with paragraphs (b) or (c)(3) of this Section.~~

(3) Within 30 feet of the intersection of two #street lines#, the #street wall# shall be located on the #street line# or anywhere within an area bounded by the two #street lines# and lines parallel to and 15 feet from such #street lines#.

(4) Where a continuous sidewalk widening is provided along ~~For #developments# that occupy~~ the entire #block# frontage of a #wide street# ~~and provide a continuous sidewalk widening along such #street line#~~, the boundary of the sidewalk widening shall be considered to be the #street line# for the purposes of this Section.

~~The #street wall# location and minimum height before setback regulations of this Section shall not apply to portions of #zoning lots# occupied by existing #buildings#.~~

(b) Special street wall regulations for buildings adjacent to listed theaters

For ~~#developments# or #enlargements#~~ #buildings# that are adjacent to a theater listed pursuant to Section 81-742 (Listed theaters), the maximum height of the #street wall# of the ~~#development# or #enlargement#~~ #building# facing the same #street# as the "listed theater" shall be 60 feet within 15 feet of the #street line#.

(c) Additional regulations applying west of Eighth Avenue

(1) West of Eighth Avenue, at any level above a height of 85 feet, any #building# or #buildings# or portions thereof shall, in the aggregate, occupy not more than 40 percent of the #lot area# of the #zoning lot#, except that for #zoning lots# of less than 20,000 square feet of #lot area# this percentage may be increased as set forth in Section 23-65~~1~~ (~~Towers on small lots~~ Tower Regulations). At any level above a height of 85 feet, any #building# or #buildings# or portions thereof shall, in the aggregate, occupy not less than 33 percent of the #lot area# of the #zoning lot#, except that such minimum #lot coverage# requirement shall not apply to the highest four #stories# of the #building#.

(2) Beyond 125 feet of the western #street line# of Eighth Avenue, and beyond 100 feet of the northern #street line# of 42nd Street, no #building or other structure# shall exceed a height of 66 feet, except in accordance with paragraph (c)(3) of this Section.

(3) Where the new or #enlarged building# #abuts# an existing #building# located entirely beyond 125 feet of the western #street line# of Eighth Avenue and the northern #street line# of 42nd Street, and such existing #building# exceeds a

height of 66 feet, the new or enlarged #building# may exceed any height limits specified in this Section up to the height of the existing #building#, provided that, within 15 feet of the #narrow street line#, such portion of the new or #enlarged building# does not exceed either the height of the existing #building# or 85 feet, whichever is less. For the purposes of this paragraph, the height of the existing #building# shall be the height of its #street wall#, before setback, if applicable, of that portion of the existing #building# #abutting# the new or #enlarged building#, fronting on the same #street line#, and located on the same or adjoining #zoning lot#.

81-80
SPECIAL REGULATIONS FOR FIFTH AVENUE SUBDISTRICT

* * *

81-82
Special Regulations on Permitted and Required Uses

In order to preserve, protect and enhance the character of the Fifth Avenue Subdistrict as the showcase of New York and national retail shopping, and to allow for #uses# that are consistent with the character of the Fifth Avenue Subdistrict as a major shopping and tourist destination, the following special limitations are imposed on the location and kinds of #uses# and #signs# permitted within the Fifth Avenue Subdistrict. These requirements and limitations shall apply to #developments#, #enlargements#, #extensions# or changes of #use#.

(a) Restriction on ground floor #uses#

~~For any #developments# located within the Fifth Avenue Subdistrict,~~ #~~u~~Uses# within #stories# located on the ground floor level or on a floor within five feet of #curb level#, except for lobby space, shall be limited to #uses# listed in Use Group F. ~~This restriction shall not apply to #uses# permitted in the underlying district for which valid leases were executed prior to March 25, 1971, and to which a member of the Bar of the State of New York shall attest.~~

(b) Minimum retail space requirement

Any #~~development~~ zoning lot# or portion thereof located within the Fifth Avenue Subdistrict shall contain #uses# listed in Use Group F with a #floor area ratio# of not less than 1.0. When existing #uses# listed in Use Group F are retained ~~within a #development# or #enlargement#~~, their #floor area# may be counted toward such requirement. In order to count toward the requirement, retail or service establishments shall be located on levels up to but not exceeding a height of six #stories# or 85 feet, whichever is less, or not more than five feet below #curb level#.

* * *

81-83
Special Street Wall Requirements

The #street wall# of any #building# with frontage on Fifth Avenue shall extend without setback from the Fifth Avenue #street line# for at least 90 percent of the entire length of the #front lot line#. The #street wall# shall reach a minimum required height of 85 feet and shall not exceed a height of 125 feet at or within 10 feet of the #street line#.

Where a ~~new #development# or #enlargement#~~ #building# occupies less than an entire #block# front of Fifth Avenue frontage, the height of the #street wall# at the #street line# shall be not more than 10 feet above or below the height of an adjacent existing #building# at the #street line#. If the ~~new #development# or #enlargement#~~ #building# is on an #interior lot# between two ~~existing~~ adjacent existing #buildings# of different heights, the height of ~~the~~ such ~~new #development's# or #enlargement's~~ building's street wall# at the #street line# shall be not more

than 10 feet above or below the #street wall# height of one of the adjacent existing #buildings# at the #street line#. However, this shall not be construed to permit a #street wall# height of less than 85 feet or more than 125 feet at the #street line#. At the required height of the ~~new #development's# or #enlargement's~~ building's street wall# at the #street line#, the #street wall# must extend continuously without setback for at least 75 percent of its required ~~length~~ width and no portion of its required ~~length~~ width shall be set back more than 10 feet from the #street line#.

* * *

81-84
Mandatory Regulations and Prohibitions

The following requirements listed in this Section shall apply to all #developments#, #enlargements#, #extensions#, or changes of #use# within the Subdistrict:

* * *

(c) Off-street loading regulations

In no event shall access to #accessory# off-street loading berths be permitted on or within 50 feet of the Fifth Avenue #street line#. Beyond 50 feet from the Fifth Avenue #street line#, ~~for any #development# requiring~~ where three or more #accessory# loading berths are required, such berths shall be located below #street# grade. Access to such berths, however, shall be permitted at #street# grade.

#Interior lots# with a frontage only on Fifth Avenue or only on a #wide street# shall not contain loading berths.

81-85
Transfer of Development Rights from Landmark Sites

For ~~new~~ #developments# or #enlargements#, in addition to the provisions of Sections 74-79 (Transfer of Development Rights from Landmark Sites) and 81-212 (Special provisions for transfer of development rights from landmark sites), the City Planning Commission may modify or waive the requirements of Section 81-40 (MANDATORY DISTRICT PLAN ELEMENTS), inclusive, and the requirements of Section 81-84 (Mandatory Regulations and Prohibitions).

In granting such special permit, the Commission shall find that the permitted transfer of #floor area# and modification or waiver of mandatory plan elements will result in a distribution of #bulk# and arrangement of #uses# on the #zoning lot# that relate more harmoniously with surrounding landmark #buildings or other structures#.

81-90
SPECIAL REGULATIONS FOR PRESERVATION SUBDISTRICT

In order to conform with the existing scale and character of the Preservation Subdistrict, any ~~#development# or #enlargement#~~ #zoning lot# located in the underlying C5-P District shall be limited to a maximum #floor area ratio# of 8.0.

For all purposes other than as set forth in this Section, the R10 District regulations shall apply to any portion of a ~~#development# or #enlargement#~~ #building# containing #residential uses#.

Mandatory #street walls# are required as follows:

The #street wall# of any ~~#residential# or non-#residential development# or #enlargement# on a #zoning lot#~~ #building# shall be ~~built to~~ located on the #street line# and shall extend along the full length of the #front lot line# to a minimum height of 72 feet above the #curb level# or the full height of the #building#, whichever is less. Above a height of 85 feet, the #street wall# shall be set back at least 15 feet from the #street

line# and shall be subject to the #sky exposure plane# regulations of Section 33-432 (In other Commercial Districts) applicable in C5 Districts. The provisions of Sections 33-44 (Alternate Front Setbacks) and 33-45 (Tower Regulations) are not applicable in the Preservation Subdistrict.

On application, the City Planning Commission may grant special authorization for minor modifications of the mandatory #street wall# provisions of this Section as applied to an #enlargement#, upon the applicant's showing of compelling necessity. Such authorization, however, may in no event include modification of permitted #floor area# regulations.

Appendix A
Midtown District Plan Maps

* * *

Map 3: Subway Station and Rail Mass Transit Facility Improvement Areas

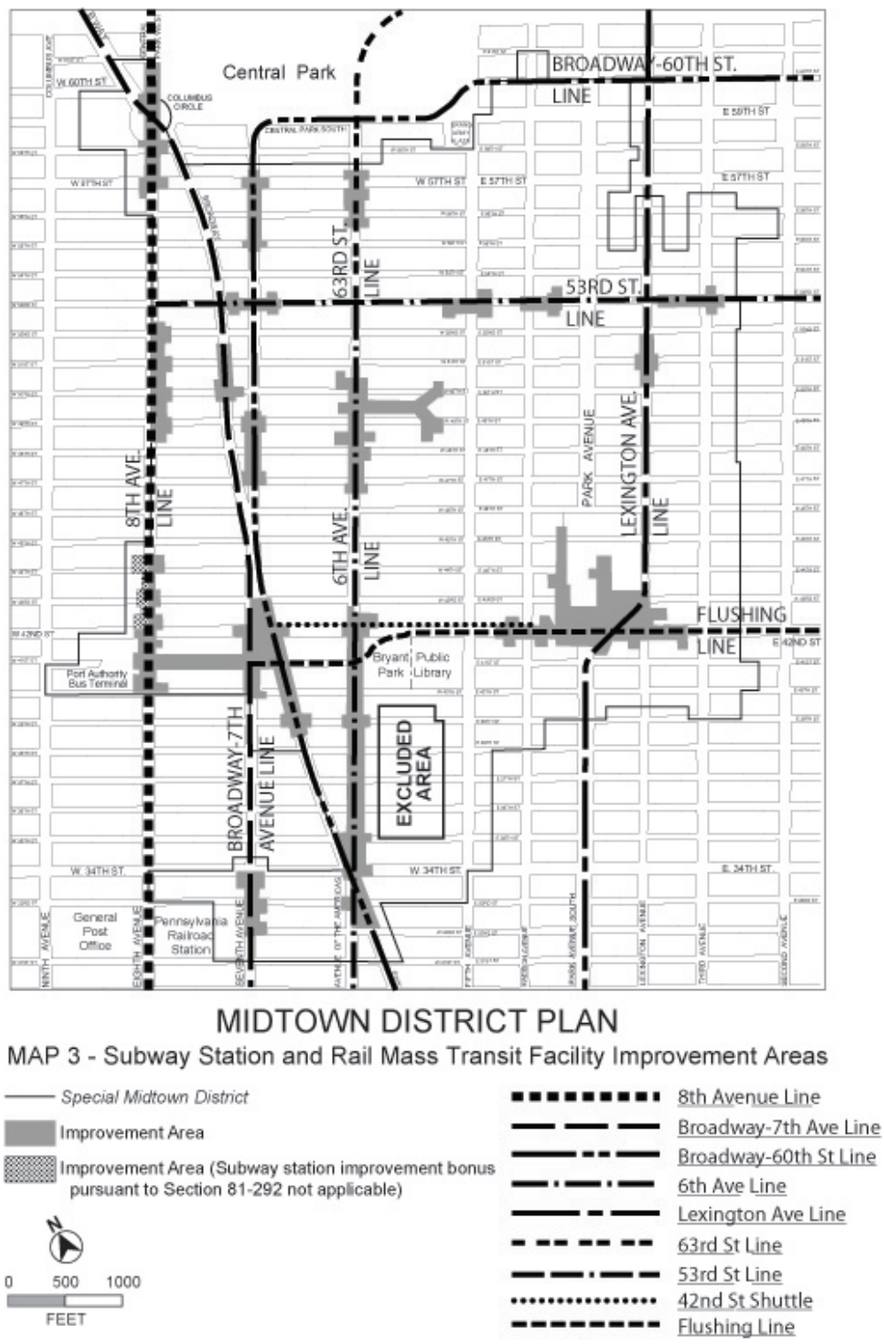

* * *

Article VIII - Special Purpose Districts

Chapter 2
Special Lincoln Square District

* * *

82-01
Definitions

Development

For purposes of this Chapter, a "development" includes both #development# and #enlargement# as defined in Section 12-10 (DEFINITIONS).

~~Special Lincoln Square District~~
~~(repeated from Section 12-10)~~

~~The "Special Lincoln Square District" is a Special Purpose District designated by the letter "L," in which special regulations set forth in Article VIII, Chapter 2, apply to all #developments#. The #Special Lincoln Square District# appears on the #zoning maps# superimposed on other districts, and its regulations supplement those of the districts on which it is superimposed.~~

* * *

~~**82-05**~~
~~**Right to Construct**~~

~~For the purposes of this Chapter, the right to continue to construct shall terminate if the provisions of Section 11-30 (BUILDING PERMITS ISSUED BEFORE EFFECTIVE DATE OF AMENDMENT) are not met by December 20, 1993.~~

~~Notwithstanding the provisions of this Chapter, any #development# approved by special permit of the City Planning Commission, pursuant to this Chapter, prior to February 9, 1994, may be started or continued pursuant to such special permit.~~

* * *

82-21
Restrictions on Street Level Uses

Within 30 feet of Broadway, Columbus Avenue or Amsterdam Avenue #street lines#, #uses# within #stories# ~~located~~ on the ground floor or with a floor level ~~or~~ within five feet of #curb level# shall be limited to those listed in Use Groups 3A, 3B, 6A, 6C, 8A, 10A, eating or drinking establishments listed in 12A or 12B. Within Use Groups 3A or 3B, #uses# shall be limited to colleges, universities including professional schools, museums, libraries or non-commercial art galleries. Within such area, lobby space, required accessory loading berths, or access to subway stations are permitted.

82-22
Location of Floors Occupied by Commercial Uses

The provisions of Section 32-422 (Location of ~~F~~floors ~~O~~occupied by ~~Non-Residential~~ commercial ~~U~~uses) shall not apply to any #commercial use# located in a portion of a #mixed building# that has separate direct access to the #street# and has no access within the #building# to the #residential# portion of the #building# at any #story#. In no event shall such #commercial use# be located directly over any #dwelling units#.

82-23

Street Wall Transparency

When the front building wall or #street wall# of any ~~#development#~~ #building developed# after February 9, 1994 is located on Broadway, Columbus Avenue or Amsterdam Avenue, at least 50 percent of the total surface area of the #street wall# between #curb level# and 12 feet above #curb level#, or to the ceiling of the first #story#, whichever is higher, shall be transparent. Such transparency shall begin not higher than two feet, six inches above #curb level#.

* * *

82-31
Floor Area Ratio Regulations for Commercial Uses

Within Subdistrict A, for any ~~#development#~~ #building# in a C4-7 District, the maximum permitted #commercial~~ #~~ floor area# ~~on a #zoning lot#~~ shall be 100,000 square feet.

82-311
Floor area increase by special permit

The City Planning Commission may by special permit allow the #commercial~~ #~~ floor area ratio# permitted on a #zoning lot# pursuant to Section 82-31 (Floor Area Ratio Regulations for Commercial Uses) within Subdistrict A to be increased to 10.0 for #commercial uses#. As a condition for such special permit, the Commission shall find that:

* * *

82-32
Special Provisions for Increases in Floor Area

* * *

(b) Floor area bonus for public amenities

~~When a #development# is located~~ ~~o~~On a #zoning lot# that is adjacent to the West 59th Street (Columbus Circle) or the West 66th Street subway station mezzanine, platform, concourse or connecting passageway, ~~with~~ where no tracks intervene~~ing~~ to separate the #zoning lot# from these elements, and such #zoning lot# contains 5,000 square feet or more of #lot area#, the City Planning Commission may, by special permit pursuant to Section 74-634 (Subway station improvements in commercial zones of 10 FAR and above in Manhattan), grant a maximum of 20 percent #floor area# bonus.

For a subway station improvement or for a subsurface concourse connection to a subway, the amount of #floor area# bonus that may be granted shall be at the discretion of the Commission. In determining the precise amount of #floor area# bonus, the Commission shall consider:

(1) the direct construction cost of the public amenity;

(2) the cost of maintaining the public amenity; and

(3) the degree to which the station's general accessibility and security will be improved by the provision of new connections, additions to or reconfigurations of circulation space, including the provision of escalators or elevators.

82-33
Modification of Bulk Regulations

The City Planning Commission may, by special permit, modify the height and setback regulations, #yard# regulations, regulations governing minimum distance between #buildings#

on a single #zoning lot#, and regulations governing #courts# and minimum distance between #legally required windows# and walls or #lot lines# ~~for any #development#~~, provided the Commission finds that such modifications are necessary to:

(a) facilitate good design;

(b) allow design flexibility for any #development# to which the mandatory provisions of Section 82-10 (MANDATORY DISTRICT IMPROVEMENTS) are applicable; or

(c) incorporate a #floor area# allowance pursuant to Section 82-32 (Special Provisions for Increases in Floor Area) where inclusion of the proposed public amenity will significantly further the specific purposes for which the #Special Lincoln Square District# is established.

* * *

82-35
Height and Setback Regulations

Within the Special District, all ~~#developments#~~ #buildings# shall be subject to the height and setback regulations of the underlying districts, except as set forth in:

(a) paragraph (a) of Section 82-37 (Street Walls along Certain Street Lines) where the #street wall# of a #building# is required to be located at the #street line#; and

(b) paragraphs (b), (c) and (d) of Section 82-37 where the #street wall# of a #building# is required to be located at the #street line# and to penetrate the #sky exposure plane# above a height of 85 feet from #curb level#.

82-36
Special Tower Coverage and Setback Regulations

The requirements set forth in Sections 33-45 (Tower Regulations) or 35-63 (Special Tower Regulations for Mixed Buildings) for any #building# or portion thereof that qualifies as a "tower" shall be modified as follows:

(a) At any level at or above a height of 85 feet above #curb level#, a tower shall occupy in the aggregate:

(1) not more than 40 percent of the #lot area# of a #zoning lot# or, for a #zoning lot# of less than 20,000 square feet, the percent set forth in Section 23-65~~1~~ (Tower ~~on small lots~~ Regulations); and

(2) not less than 30 percent of the #lot area# of a #zoning lot#.

However, the highest four #stories# of the tower or 40 feet, whichever is less, may cover less than 30 percent of the #lot area# of a #zoning lot# if the gross area of each #story# does not exceed 80 percent of the gross area of the #story# directly below it.

(b) At all levels at or above a height of 85 feet from #curb level#, the minimum required setback of the #street wall# of a tower shall be at least 15 feet from the #street line# of Broadway or Columbus Avenue, and at least 20 feet on a #narrow street#.

(c) In Subdistrict A, the provisions of paragraph (a) of Section 35-63, as modified by paragraphs (a) and (b) of this Section, shall apply to any #mixed building#.

For the purposes of determining the permitted tower coverage in Block 3 as indicated on the District Plan, that portion of a #zoning lot# located within 100 feet of the west #street line# of Central Park West shall be treated as if it were a separate #zoning lot# and the tower regulations shall not apply to such portion.

82-37
Street Walls along Certain Street Lines

(a) ~~For any #development#~~ O~~o~~n a #zoning lot# with a #front lot line# coincident with any of the following #street lines#, a #street wall# shall be located on such #street line# for the entire frontage of the #zoning lot# on that #street# and shall rise without setback to a height of 85 feet above #curb level#:

(1) the east side of Broadway between West 61st Street and West 65th Street;

(2) the east side of Columbus Avenue between West 65th Street and West 66th Street;

(3) the east side of Broadway between West 67th Street and West 68th Street;

(4) the west side of Broadway between West 66th Street and West 68th Street; and

(5) the west side of Broadway between West 60th Street and West 62nd Street.

Such #street wall# shall extend on a #narrow street# to a distance of not less than 50 feet from its intersection with the #street line# of Broadway or Columbus Avenue and shall include a 20 foot setback at a height of 85 feet above #curb level# as required in Section 33-432 (In other Commercial Districts).

(b) ~~For any #development#~~ O~~o~~n a #zoning lot# in Block 1 with a #front lot line# coincident with any of the following #street lines#, a #street wall# shall be located on such #street lines# for the entire frontage of the #zoning lot# on that #street#:

(1) the west side of Broadway between West 62nd Street and West 63rd Street;

(2) the south side of West 63rd Street between Broadway and Columbus Avenue; and

(3) the east side of Columbus Avenue between West 62nd Street and West 63rd Street.

The #street wall# located on the south side of West 63rd Street shall rise vertically without setback to the full height of the #building# except for the top four floors or 40 feet, whichever is less, and shall extend along Columbus Avenue and/or Broadway for no more than one half of the length of the total #block# front. The #street wall# located on the remaining #block# front on Broadway shall rise to a height of 85 feet above #curb level# and then set back 20 feet as required in Section 33-432 (In other Commercial Districts).

(c) ~~For any #development#~~ O~~o~~n a #zoning lot# in Block 2 with a #front lot line# coincident with any of the following #street lines#, a #street wall# shall be located on such #street line# for the entire frontage of the #zoning lot# on that #street#:

(1) the east side of Broadway between West 67th Street and West 66th Street;

(2) the north side of West 66th Street between Broadway and Columbus Avenue; and

(3) the west side of Columbus Avenue between West 66th Street and West 67th Street.

The #street wall# located on the north side of West 66th Street shall rise vertically without setback to the full height of the #building# except for the top four floors or 40 feet, whichever is less, and shall extend on Broadway and/or Columbus Avenue for no more than one-half of the length of the total #block# front. The #street wall# located on the remaining #block# front on Broadway shall rise to a height of 85 feet above #curb

level# and then setback 20 feet as required in Section 33-432.

(d) ~~For any #development#~~ O~~o~~n a #zoning lot# in Block 3 with a #front lot line# coincident with the #street line# of Central Park West, the #street wall# shall be located on such #street line# for the entire frontage of the #zoning lot# on that #street#.

The #street wall# fronting on Central Park West shall rise vertically without setback to a height of at least 125 feet but not greater than 150 feet and shall extend along the #street line# of West 61st Street and along the #street line# of West 62nd Street to a distance of not less than 50 feet but not more than 100 feet from their intersection with the west #street line# of Central Park West. Above that height no #building or other structure# shall penetrate a #sky exposure plane# that starts at the #street line# and rises over the #zoning lot# at a ratio of 2.5 : 1.

82-38
Recesses in the Street Wall ~~of a Building~~

Recessed fenestration and special architectural expression lines in the #street wall# ~~building facade of a #development#~~ are required as follows:

(a) Except as set forth in paragraph (b) of this Section, the aggregate ~~length~~ width of all recesses in the #street wall# ~~along~~ fronting upon Broadway ~~of a #development#~~ shall be between 15 percent and 30 percent of the entire ~~length~~ width of such #street wall# at any #story# between the ground floor and 85 feet above #curb level#.

(b) In Block 1, for any ~~#development# that fronts on the #street line# of~~ #street wall# fronting upon the south side of West 63rd Street and extend~~s~~ing along ~~the #street line# of~~ Broadway and/or Columbus Avenue to a distance of not less than 50 percent of the #block# front, the aggregate ~~length~~ width of all recesses in the #street walls# along each such #street# ~~frontage~~ shall be between 15 percent and 30 percent of the entire ~~length~~ width of each #street wall# at any #story# between the ground floor and 85 feet above #curb level# and shall be between 30 percent and 50 percent of the entire ~~length~~ width of each #street wall# at any #story# above 85 feet above #curb level#.

(c) In Block 2, the requirement of #street wall# recesses in paragraph (b) of this Section shall also apply to a #street wall# fronting upon ~~#development# that fronts on the #street line# of~~ the north side of West 66th Street and extend~~s~~ing along ~~the #street line# of~~ Broadway and/or Columbus Avenue to a distance of not less than 50 percent of the #block# front.

Such recesses shall be a minimum of one foot in depth and shall not exceed a depth of 10 feet. Below a height of 85 feet above #curb level#, no recesses deeper than one foot shall be permitted in ~~the~~ a #street wall# ~~of a #building#~~ within a distance of 10 feet from the intersection of any two #street lines#.

In addition, along the #street lines# of Broadway, West 63rd Street and West 66th Street within Blocks 1 and 2, the #street wall# shall provide, at a height of 20 feet above #curb level#, an architectural expression line consisting of a minimum six inch recess or projection, for a minimum height of one foot and maximum height of two feet.

* * *

82-40
SPECIAL HEIGHT LIMITATION

~~For #developments# located in~~ On Block 1 or Block 2, the maximum height of a #building or other structure~~#, or portion thereof~~, shall not exceed 275 feet above #curb level#, except that a penthouse may be located above such height, provided that such penthouse:

(1) contains not more than four #stories# or 40 feet, whichever is less; and

(2) the gross area of each #story# does not exceed 80 percent of the gross area of that #story# directly below it.

* * *

Article VIII - Special Purpose Districts

Chapter 3
Special Limited Commercial District

* * *

~~**83-01**~~
~~**Definition**~~

~~Special Limited Commercial District~~
~~(repeated from Section 12-10)~~

~~The "Special Limited Commercial District" is a Special Purpose District designated by the letters "LC" in which special regulations as set forth in Article VIII, Chapter 3, apply to all #developments#. The #Special Limited Commercial District# appears on the #zoning maps# superimposed on other districts, and its regulations supplement those of the districts on which it is superimposed.~~

~~#Special Limited Commercial Districts# are confined to #Commercial Districts# within areas or portions of areas established by the Landmarks Preservation Commission as "Historic Districts" pursuant to Chapters 8A or 63 of the New York City Charter and Chapter 8A of the New York City Administrative Code.~~

83-02
General Provisions

#Special Limited Commercial Districts# may only be mapped in #Commercial Districts# within areas or portions of areas designated by the Landmarks Preservation Commission as "Historic Districts" pursuant to Chapters 8A or 63 of the New York City Charter and Chapter 8A of the New York City Administrative Code.

In harmony with the general purpose and intent of this Resolution and the general purpose of the #Special Limited Commercial District# and in accordance with the provisions of this Chapter, certain specified #use#, #sign# and enclosure regulations of the districts on which #Special Limited Commercial Districts# are superimposed are made inapplicable, and are superseded by the #use#, #sign# and enclosure regulations of the #Special Limited Commercial District# as set forth in this Chapter.

In addition to meeting the #use#, #sign# and enclosure regulations as set forth in this Chapter, each ~~#development#~~ #building# shall conform to and comply with all of the applicable district regulations of this Resolution, except as otherwise specifically provided in this Chapter.

* * *

Article VIII - Special Purpose Districts

Chapter 4
Special Battery Park City District

* * *

84-01
Definitions

For purposes of this Chapter, matter in italics is defined in Section 12-10 (DEFINITIONS), in this Section or Section 84-021 (District Plan). Where matter in italics is defined both in Section 12-10 and in this Chapter, the definitions in this Chapter shall govern.

~~Special Battery Park City District~~
~~(repeated from Section 12-10)~~

~~The "Special Battery Park City District" is a Special Purpose District designated by the letters "BPC" in which special regulations set forth in Article VIII, Chapter 4, apply to all #development#, #enlargement# and changes of #use#.~~

* * *

Special height locations

"Special height locations" are designated areas ~~on certain #zoning lots#~~ in Zone A and Zone C of the #Special Battery Park City District# ~~upon which a #development# or #enlargement#, or portion thereof, may be built to the maximum height above #curb level# indicated in~~ subject to the regulations in Appendices 2.2 and 3.2 of this Chapter, in accordance with Sections 84-135 and Section 84-333 (Limited height of buildings).

* * *

84-031
Special permit uses

The following #uses# are permitted only by special permit of the City Planning Commission:

Electrical or gas utility substations, open or enclosed, pursuant to Section 74-61

In Zone A, #public parking garages# as provided for in C5 Districts, pursuant to Section 74-52

As a condition precedent to the granting of such special permit, the Commission shall make a finding that such #use# is located so as to minimize adverse effects on existing or future ~~#development#~~ development in nearby areas or on the use or enjoyment of the #Esplanade# or other public facilities.

The following #uses# are permitted only by special permit of the Board of Standards and Appeals:

Electrical or gas utility substations, open or enclosed, pursuant to Section 73-14

Public utility stations for oil or gas metering or regulating, pursuant to Section 73-15

Telephone exchanges or other communications equipment structures pursuant to Section 73-14

In Zone A, #physical culture or health establishments# in subzone A-4 only, pursuant to Section 73-36. However, #physical culture or health establishments# located below the

level of the first #story# ceiling shall not be permitted to front on the #Esplanade#.

* * *

84-10
ZONE A GENERAL DISTRICT REGULATIONS

Zone A is designed generally to provide for ~~#residential development#~~ residential development with ancillary retail and service #uses#, and #transient hotels# as permitted pursuant to Section 84-12. Zone A is divided into six subzones: A-1, A-2, A-3, A-4, A-5 and A-6. The location and boundaries of the subzones are shown in Appendices 2 and 3 of this Chapter.

84-11
General Provisions

Except as expressly modified by the provisions of this Chapter, the regulations applying to an R10 District shall apply in subzones A-1, A-2, A-3, A-5 and A-6 of the #Special Battery Park City District#.

Notwithstanding any other provision of this Resolution, ~~no~~ #developments# and #enlargements# may only be constructed in subzone A-4 ~~except~~ in accordance with certifications given by the City Planning Commission.

#Residential open space#~~,~~ in subzone A-4 shall be subject to the provisions of Sections 12-10 and 23-12 (Permitted Obstructions in Open Space). For every #dwelling unit# there shall be a minimum of 55.0 square feet of #open space#, and for every #rooming unit# there shall be a minimum of 44.0 square feet of #open space#.

All other provisions of this Chapter with respect to Zone A shall not apply to #developments# or #enlargements# in subzone A-4 unless otherwise indicated.

84-12
Use Regulations

In the areas indicated as permitted #commercial# locations in Appendices 2.3 and 3.3, the #use# regulations applying in a C2 District shall apply, except as provided in Sections 84-031 (Special permit uses), 84-032 (Uses not permitted), 84-121 (Uses along Esplanade) and this Section.

In the case of a #mixed ~~#building#~~ building# containing #residential# and non-#residential uses#, #residential uses# are permitted on the same #story# as a non-#residential use# provided no access exists between such #uses# at any level containing #residences# and provided any non-#residential uses# are not located over any #residences#. However, such non-#residential uses# may be located over #residences# by authorization of the City Planning Commission upon finding that sufficient separation of #residences# from non-#residential uses# exists within the #building#.

Notwithstanding any other provisions of this Resolution, the permitted #uses# listed in Use Groups 6, 7, 8, 9 or 14 and the additional #uses# permitted hereunder shall be limited, per establishment, to 10,000 square feet of #floor area# of any #story# and shall not be located above the first #story# ceiling, except that:

(a) in any ~~#development#~~ #building# containing an #arcade# required in Section 84-134 (Mandatory arcades), any permitted #use# may be located above the first #story# ceiling and below the second #story# ceiling; and

(b) supermarkets are permitted with no limitation on #floor area#.

Notwithstanding any other provisions of this Resolution, the #zoning lot# south of First Place and east of Battery Place may ~~be #developed# either with~~ contain #residential uses#, #transient

hotel uses#, or ~~as a #building# containing~~ both #residential# and hotel #uses#.

In the case of ~~a #development# containing~~ hotel #uses# on this #zoning lot#:

(1) a #physical culture or health establishment# may be permitted; and

(2) an eating and drinking establishment, as permitted in Section 32-15 (Use Group 6), and a #physical culture and health establishment# or a non-#residential accessory use# may be located above a #story# containing #residential uses#.

84-121
Uses along Esplanade

Except as set forth in this Section and in Section 84-12 (Use Regulations), #uses# fronting on the #Esplanade# shall be limited to the #uses# listed in Use Groups 2, 3 and 4 as set forth in Section 22-10 (USES PERMITTED AS-OF-RIGHT), except that in the areas indicated as permitted #commercial# locations in Appendix 2.3, in the lowest #story# other than a #basement# in any ~~#development#~~ #building#, the following additional #uses# shall be permitted:

Eating or drinking places, as listed in Use Group 6A in Section 32-15

* * *

84-13
Bulk Regulations

#Residential# and #community facility~~#~~ bulk# regulations otherwise applicable in R10 Districts are modified to the extent set forth in this Section and Sections 84-131 through 84-135, inclusive.

The ~~height and setback~~ regulations otherwise applicable in R10 Districts are superseded by the regulations set forth in Sections 84-131 (Floor area regulations), 84-132 (Mandatory front building walls), 84-134 (Mandatory arcades) and 84-135 (Limited height of buildings).

The provisions of Section 23-533 (Required rear yard equivalents), Section 24-11 (Maximum Floor Area Ratio and Percentage of Coverage), Article VII, Chapter 8 (Special Regulations Applying to Large Scale Residential Developments), and Article VII, Chapter 9 (Special Regulations Applying to Large Scale Community Facility Development) are not applicable.

The provisions of Section 23-70 (MINIMUM DISTANCE BETWEEN BUILDINGS) may be modified by the Battery Park City Authority. Prior to the granting of any such modification, the Authority shall make the following findings:

(a) that such modification will aid in achieving the general purpose and intent of the #Special Battery Park City District#, as set forth in Section 84-01;

(b) that such modification will not unduly increase the #bulk# of #buildings#, the density of population or the intensity of #use# on any #zoning lot# to the detriment of the occupants of #buildings# on such #zoning lot# or nearby #zoning lots#;

(c) that such modification will not adversely affect the #buildings# on the #zoning lot# or nearby #zoning lots# by restricting access to light and air; and

(d) that if an open area is provided, at any level, between two #buildings#, it shall have a width of not less than eight feet.

84-131
Floor area regulations

Notwithstanding any other provisions of this Resolution, the permitted #floor area ratio# for any

~~#development# or #enlargement# on a~~ #zoning lot# in subzones A-1 and A-5 shall not exceed 12.0, and in subzones A-2, A-3 and A-6 shall not exceed 8.0. However, within subzone A-6, the #floor area ratio# for the #zoning lot# on the southeast corner of Chambers Street and North End Avenue may be increased from 8.0 to a maximum of 12.0, provided that such additional #floor area# is occupied by a #school#.

The #floor area# bonus provisions with respect to R10 Districts shall not apply.

84-132
Mandatory front building walls

Except as set forth in paragraph (g) and (i) of this Section, where Appendices 2.1 or 3.1 show a requirement for a ~~#development#~~ #building# in Zone A to be built to a #mandatory front building wall line#, any such ~~#development#~~ #building# shall have a mandatory front building wall coincident with and constructed along such #mandatory front building wall line#, which shall rise without setback for a height above #curb level# as specified in this Section, except that, at building entrances, openings below the second #story# ceiling in the mandatory front building walls will be permitted to provide access to courtyards:

(a) except as set forth in paragraph (d) of this Section, with respect to any 60-85 foot #mandatory front building wall line# shown in Appendix 2.1, a height of not less than 60 feet nor more than 85 feet;

(b) with respect to any 110-135 foot #mandatory front building wall line# shown in Appendix 2.1, a height of not less than 110 feet nor more than 135 feet. However, a setback of not more than 10 feet may be provided at a height of 85 feet or more above #curb level#;

(c) on the portion of any #zoning lot# designated as a #special height location# in Appendix 2.2, a height of not less than the applicable amount set forth in paragraphs (a) or (b) of this Section and not more than the maximum height indicated in Appendix 2.2 or in paragraph (d)(1) of Section 84-135 (Limited height of buildings);

(d) with respect to any #zoning lot# south of West Thames Street, east of South End Avenue, north of Third Place and west of Battery Place, a height of not less than 18 feet nor more than 85 feet above #curb level#;

(e) with respect to any 110-135 foot #mandatory front building wall line# shown in Appendix 3.1, a height of not less than 110 feet nor more than 135 feet;

(f) with respect to any 110-230 foot #mandatory front building wall line# shown in Appendix 3.1, a height of not less than 110 feet nor more than 230 feet, except that:

(1) the ~~length~~ width of the mandatory front building wall in excess of a height of 135 feet shall not exceed 120 feet along any frontage;

(2) where the ~~length~~ width of the #mandatory front building wall line# along #street lines# intersecting North End Avenue exceeds 100 feet, the mandatory front building wall in excess of a height of 135 feet shall not exceed a ~~length~~ width of 75 feet along North End Avenue. However, the ~~length~~ width of the mandatory front building wall along #street lines# intersecting North End Avenue may be reduced to not less than 100 feet in order to accommodate landscaping and other improvements within or adjacent to the public open space areas shown in Appendix 3.6;

(3) a setback of ten feet at a height of 135 feet is required along all street frontages, except Park Place West; and

(4) a setback of not less than five feet and not more than ten feet is required in other locations at a height of 135 feet, as shown in Appendix 3.1;

(g) with respect to any 150-250 foot #mandatory front building wall line# shown in Appendix 3.1, a height of not less than 150 feet nor more than 250 feet, except that the height may not exceed either 150 feet for more than 120 feet or 75 percent of the length of the site's western property line, whichever is less, and a setback of not less than five feet and not more than ten feet is required at a height of 150 feet. Where Appendix 3.1 shows a requirement for a ~~#development#~~ #building# to be built to a #mandatory front building wall line# along frontage on River Terrace, any such ~~#development#~~ #building# may have a mandatory front building wall coincident with and constructed along a line set back one and one-half feet from the #street line# along River Terrace to accommodate landscaping treatment as required by the Battery Park City Authority;

(h) on the portion of any #zoning lot# designated as a #special height location# in Appendix 3.2, a height of not less than the applicable amount set forth in paragraphs (e), (f) or (g) of this Section and not more than the height shown in Appendix 3.2; and

(i) on the #zoning lot# south of First Place and west of Battery Place, the eastern mandatory front building wall may be located within 30 feet from the eastern #mandatory front building wall line#, and the southern mandatory front building wall may be reduced in ~~length~~ width up to 30 feet along the southern #mandatory front building wall line# within 30 feet from the intersection with the eastern #mandatory building wall line#.

Subject to the provisions of Section 84-133 (Front wall recesses), the mandatory front building wall requirements set forth in this Section shall also apply to all ~~#developments#~~ #building# along all #street lines# within 50 feet of their intersection with any #mandatory front building wall line#. For the next 20 feet along the #street line#, the mandatory front building wall requirements are optional except that, for any ~~#development#~~ #building# north of Vesey Street and Vesey Place, the mandatory front building wall requirements are optional for the next 25 feet. The height limit of 85 feet shall apply along #street lines# or to ~~#developments#~~ #buildings# not subject to the mandatory front building wall requirements.

* * *

84-134
Mandatory arcades

~~Any #development# located on a #zoning lot# upon which~~ Appendix 2.4 (Mandatory Arcades) specifies those #zoning lots# where an #arcade# ~~requires an #arcade# shall contain an #arcade#~~ as defined in Section 12-10 (DEFINITIONS) shall be provided; and:

(a) the #arcade# shall extend the full ~~length~~ width of the #zoning lot# along the indicated #street lines# or other lines, except where otherwise indicated in Appendix 2.4; and

(b) the minimum unobstructed depth of the #arcade# shall be 12 feet, and the minimum height of the #arcade# shall be 20 feet above #curb level#.

84-135
Limited height of buildings

For the purposes of this Section, the term "#buildings#" shall include #buildings or other structures#. No portion of any #building ~~or other structure~~# may be built to a height greater than 85 feet above #curb level#, except that:

(a) any portion of a #building# required to have an exterior wall coincident with a 110-135 foot #mandatory front building wall line#, as provided in Section 84-132 (Mandatory front building walls), may be built to a height of up to 135 feet above #curb level#;

(b) any portion of a #building# required to have an exterior wall coincident with a 110-230 foot #mandatory front building wall line#, as provided in Section 84-132 and subject to the requirements contained in paragraph (f) therein, may be built to a height of up to 230

feet above #curb level#;

(c) portions of a #building# required to have an exterior wall coincident with a 150-250 foot #mandatory front building wall line#, as provided in Section 84-132, may be built to a height of up to 250 feet above #curb level#;

(d) on the portion of any #zoning lot# designated as a #special height location# in Appendices 2.2 or 3.2, a #building# may be built to the height above #curb level# indicated in Appendices 2.2 or 3.2, subject to the following:

(1) on any ~~#development#~~ #building# south of First Place and east of Battery Place, with a mandatory front building wall, the area of which, below the level of the second story ceiling, occupies 100 percent of the frontage along its #mandatory front building wall line#, a height of not more than 450 feet, provided, however, that a setback of not more than 10 feet may be provided at a height of 85 feet or more above #curb level#;

(2) on #zoning lots# located north of First Place, south of Third Place, and east of Battery Place, #special height locations# not to exceed heights of 135 feet or 360 feet above #curb level# are permitted as indicated in Appendix 2.2, provided that a setback of 10 feet is provided at a height of 85 feet above #curb level# along any #narrow street# frontage;

(3) on the #zoning lot# at the southeast corner of Chambers Street and North End Avenue, the #special height location# indicated in Appendix 3.2 shall apply only if such #zoning lot# is occupied by #school# and #residential uses# and the portion of the #building# above a height of 135 feet above #curb level# does not exceed a #lot coverage# of 40 percent; and

(4) on the #zoning lot# at the northeast corner of Murray Street and North End Avenue, a #special height location# of 320 feet above #curb level# is permitted as indicated in Appendix 3.2, subject to the requirements contained in Section 84-132, paragraph (f);

(e) Sections 23-62 (Permitted Obstructions) and 33-42 (Permitted Obstructions) are hereby made inapplicable. Any portion of a #building ~~or other structure~~# that exceeds an established height limit shall be subject to the following provisions:

(1) The following shall not be considered obstructions and may thus penetrate a maximum height limit:

Chimneys or flues, with a total width not exceeding 10 percent of the #aggregate width of street walls# of a #building# at any level

Elevator or stair bulkheads, roof water tanks, cooling towers or other #accessory# mechanical equipment (including enclosure walls), provided that either the product, in square feet, of the #aggregate width of street walls# of such obstructions facing each #street# frontage times their average height, in feet, shall not exceed a figure equal to eight times the width, in feet, of the #street wall# of the #building# facing such frontage at #curb level#, or the #lot coverage# of all such obstructions does not exceed 20 percent of the #lot coverage# of the #building# and the height of all such obstructions does not exceed 40 feet

Flagpoles and aerials

Heliostats and wind turbines

Parapet walls, not more than four feet high

Wire, chain link or other transparent fences

(2) The maximum permitted size of enclosure walls surrounding elevator or stair bulkheads, roof water tanks, cooling towers or other mechanical equipment may be increased by authorization of the City Planning Commission, provided the Commission finds that:

(i) the width of such additional enclosure wall at each building face does not exceed 80 percent of the width of the enclosure wall as allowed in paragraph (e)(1) of this Section;

(ii) the additional area of the enclosure wall at each building face is not more than 50 percent of the area permitted as-of-right; and

(iii) the enclosure wall is compatible with the #building# and the urban design goals of the Special District and complements the design by providing a decorative top; and

(f) in #special height locations# in Appendices 2.2 and 3.2, no portion of a #building#, including permitted obstructions, shall exceed a height of 450 feet above #curb level#.

* * *

84-141
Accessory off-street parking spaces

* * *

The City Planning Commission may, upon application, authorize permitted #accessory# off-street parking spaces to be located anywhere within Zone A without regard for #zoning lot lines#, provided that the Commission shall find that:

(a) the #accessory# off-street parking spaces and required curb cuts are located within subzones A-1, A-2 or A-3 for #zoning lots# within subzones A-1, A-2 or A-3, or within subzones A-5 or A-6 for #zoning lots# in subzones A-5 or A-6, as indicated in Appendices 2 and 3; parking setbacks in Appendices 2.5 and 3.4; and curb cut locations in Appendices 2.6 and 3.5;

(b) such #accessory# off-street parking spaces will be conveniently located in relation to the ~~#residential~~ buildings# containing #residences# to which such off-street spaces are #accessory#, and provided that all such spaces shall not be further than 600 feet from the nearest boundary of the #zoning lot# occupied by the #residences# to which they are #accessory#;

(c) such location of #accessory# off-street parking spaces will permit better site planning;

(d) the #accessory# off-street parking facility will not create or contribute to traffic congestion or unduly inhibit vehicular and pedestrian movement;

(e) the #accessory# off-street parking facility is located so as to draw a minimum of additional vehicular traffic to and through local ~~#residential~~ residential #streets#; and

(f) such #accessory# off-street parking facility shall contain parking spaces #accessory# to #residential uses# only.

Whenever off-street parking spaces are authorized to be located without regard to #zoning lot lines# in accordance with the provisions of this Section, the number of spaces generated by each #building# shall be recorded in that building's certificate of occupancy (temporary and permanent). In addition, any certificate of occupancy for the #accessory# off-street parking facility shall state the number of parking spaces authorized to be relocated from each #zoning lot#.

* * *

84-144
Location of curb cuts

Curb cuts are permitted only in the areas or locations indicated in Appendices 2.6 and 3.5. The aggregate width of all curb cuts provided for any ~~#development#~~ #zoning lot# shall not exceed 20 feet, except that:

* * *

84-20
ZONE B

Zone B is designed to provide for commercial and mixed ~~#development#~~ development with ancillary retail and service ~~#uses#~~ uses, in accordance with the Large Scale Commercial Development Plan which is attached as an exhibit to the Master Lease for Battery Park City dated June 6, 1980, as amended. Alignment of the pedestrian bridge at Liberty Street shall connect or allow for connection at the easterly line of West Street with a pedestrian connection to be provided on the southerly side of Liberty Street, as provided in this Section and Section 91-72 (Certification for Development on the Block bounded by Liberty, Washington, Cedar and West Streets). In addition, the pedestrian bridge at the World Trade Center crossing shall connect or allow for connection with the World Trade Center at the easterly line of West Street. The pedestrian bridges are shown on the District Plan in Appendix 1.

* * *

84-31
General Provisions

Zone C is designed to provide for commercial and mixed ~~#~~ use ~~#development#~~ development, parking and ancillary retail and service ~~#uses#~~ uses as permitted pursuant to this Chapter. Zone C is divided into two subzones: C-1 and C-2. The location and boundaries of the subzones are shown in Appendix 3 of this Chapter. Except as expressly modified by the provisions of this Chapter, the regulations applying to a C6-6 District shall apply in Zone C of the #Special Battery Park City District#.

* * *

84-331
Floor area regulations

Notwithstanding any other provisions of this Resolution, the permitted #floor area ratio# for any ~~#development# or #enlargement#~~ #zoning lot# shall not exceed 15.0. The #floor area ratio# ~~of a #residential building# or the #residential# portion of a #mixed building#~~ for #residential uses# shall not exceed 10.0. The #floor area# bonus provisions shall not apply.

84-332
Mandatory front building walls

~~Where~~ Appendix 3.1 ~~shows a requirement for a #development#~~ specifies locations where ~~to be built to~~ a #mandatory front building wall line# is required. ~~, any such #development#~~ #Buildings# shall have a mandatory front building wall coincident with and constructed along such #mandatory front building wall line# for a minimum of 80 percent of the length of the frontage required to have the mandatory front building wall, which shall rise without setback for a height above #curb level# not less than 110 feet nor more than 140 feet in subzone C-1, and not less than 60 feet nor more than 140 feet in subzone C-2, except that the mandatory front building wall on Murray Street within subzone C-2 may rise without setback to the maximum height established pursuant to Section 84-333 (Limited height of buildings) and, provided further, that the mandatory front building wall requirement shall not apply to the building frontage along a pedestrian right-of-way in subzone C-2.

* * *

84-333
Limited height of buildings

The maximum height of any #building or other structure#, or portion thereof, shall not exceed 400 feet on any portion of subzone C-1 shown as a #special height location# in Appendix 3.2, except that permitted obstructions pursuant to Section 33-42 shall be allowed to penetrate a maximum height limit.

The maximum height of any #building or other structure#, or any portion thereof, located within subzone C-2 shall not exceed 180 feet above #curb level#, except that:

(a) the maximum height of any #building or other structure#, or portion thereof, shown as a #special height location# shall not exceed the height set forth in Appendix 3.2; and

* * *

Article VIII - Special Purpose Districts

Chapter 5
Special United Nations Development District

* * *

~~**85-01**~~
~~**Definition**~~

~~Special United Nations Development District~~
~~(repeated from Section 12-10)~~

~~The "Special United Nations Development District" is a Special Purpose District designated by the letter "U" in which special regulations set forth in Article VIII, Chapter 5, apply. The #Special United Nations Development District# appears on the #zoning maps# superimposed on other districts, and, where indicated, its regulations supersede those of the districts on which it is superimposed.~~

* * *

85-04
Modifications of Bulk Regulations

* * *

For a #residential building# or the #residential# portions of any #mixed~~-#use~~ use building# located on the north side of 44th Street within the #Special United Nations Development District#, the provisions of Section 23-533 (Required rear yard equivalents) and Section 23-711 (Standard minimum distance between buildings) shall not apply. Notwithstanding anything in this Resolution to the contrary, the minimum distance between a #residential# portion of a #building# and any other #building# on the same #zoning lot# within the #Special United Nations Development District# shall be not less than 28 feet.

For any ~~#residential~~ building# containing #residences# within the #Special United Nations Development District#, the applicable density requirements may be modified, but in no event shall there be less than 395 square feet of #residential floor area# per #dwelling unit# or 300 square feet of #residential floor area# per #rooming unit#.

* * *

Article VIII - Special Purpose Districts

Chapter 6
Special Forest Hills District

* * *

~~**86-01**~~
~~**Definitions**~~

~~**Special Forest Hills District**~~

~~The "Special Forest Hills District" is a Special Purpose District designated by the letters "FH" in which special regulations set forth in Article VIII, Chapter 6, apply. The #Special Forest Hills District# appears on the #zoning maps# superimposed on other districts and its regulations supersede, supplement and modify those of the districts upon which it is superimposed.~~

86-02
General Provisions

In harmony with the general purposes of this Resolution and in accordance with the provisions of the #Special Forest Hills District#, the regulations of this Chapter shall apply ~~to all #developments#, #enlargements#, alterations and changes of #use#~~ within the Special District. Unless modified by the particular provisions of the Special District, the regulations of the underlying zoning districts shall remain in effect. In the event of a conflict between the provisions of this Chapter and other regulations of this Resolution, the provisions of this Chapter shall control.

Any special permit granted by the Board of Standards and Appeals before March 24, 2009, may be started or continued, in accordance with the terms thereof, or as such terms may be subsequently modified, pursuant to the regulations in effect at the time such special permit was granted, subject to the provisions of Sections 11-42 (Lapse of Authorization or Special Permit Granted by the City Planning Commission Pursuant to the 1961 Zoning Resolution) and 11-43 (Renewal of Authorization or Special Permit).

* * *

86-11
Ground Floor Uses along Designated Streets

Along the portions of Austin Street and 71st Avenue specified on the map in the Appendix to this Chapter as Retail Continuity Streets, #uses# ~~located on the ground floor level or~~ within #stories# that have a floor level within five feet of #curb level#, and within 30 feet of the #street wall#, shall be limited to #commercial# or #community facility uses# permitted by the underlying district and the provisions of Section 86-12 (Modification of Uses on Austin Street).

The ground floor #street# frontage of a #development# or #enlargement# constructed after March 24, 2009 shall be allocated exclusively to such #uses#, except for lobby space, entryways or entrances to subway stations and #accessory# parking spaces. In no event shall the length of #street# frontage occupied by lobby space exceed, in total, 40 feet or 25 percent of the #building's# total #street# frontage, whichever is less.

* * *

86-13
Location of Uses in Mixed Buildings

The provisions of Section 32-422 (Location of floors occupied by ~~non-residential~~ commercial uses) are modified to permit ~~#residential uses#~~ #dwelling units# or #rooming units# on the same #story# as a non-#residential use# provided no access exists between such #uses# at any level

containing ~~#residences#~~ #dwelling units# or #rooming units# and provided any non-#residential uses# are not located directly over any ~~#residential uses#~~#dwelling units# or #rooming units#.

Such non-#residential uses#, however, may be located over ~~a #residential use#~~ #dwelling units# or #rooming units# by authorization of the City Planning Commission upon a finding that there is sufficient separation of #residential uses# from non-#residential uses# within the #building#.

86-14
Transparency Requirements

For #developments# or #enlargements# constructed after March 24, 2009, the ~~The~~ ground floor #street wall# bounding any #commercial# or #community facility use#, other than a #school#, shall be glazed with transparent materials which may include show windows, glazed transoms or glazed portions of doors.

* * *

86-15
Security Gates

For all #commercial# or #community facility uses# located on the ground floor ~~of a #development# or #enlargement# within the #Special Forest Hills District#~~, any security gates installed after March 24, 2009, that are swung, drawn or lowered to secure #commercial# or #community facility# premises shall, when closed, permit visibility of at least 75 percent of the area covered by such gate when viewed from the #street# or any publicly accessible area, except that this provision shall not apply to entrances or exits to parking garages.

* * *

86-23
Height and Setback Regulations

~~#Developments# and #enlargements#~~ #Buildings or other structures# within the Special District shall comply with the height and setback regulations of Section 35-24 (Special Street Wall Location and Height and Setback Regulations in Certain Districts), except as modified by this Section.

(a) In C4-4A Districts

~~For #developments# or #enlargements# within~~ Within the C4-4A District, the maximum base height of the #street wall# shall be 60 feet.

The maximum height of a #building or other structure# within the C4-4A District shall be 70 feet.

(b) In C4-5X Districts

~~For #developments# or #enlargements# within~~ Within the C4-5X District west of 70th Road, the minimum base height of the #street wall# shall be 40 feet and the maximum base height of the #street wall# shall be 60 feet.

The maximum height of a #building or other structure# within the C4-5X District shall be 120 feet, except that within 60 feet of the northerly side of Austin Street between Yellowstone Boulevard and 70th Avenue, the maximum height for #buildings or other structures# ~~or portions of #buildings# on #zoning lots# located wholly or partly within 60 feet of the northerly side of Austin Street between Yellowstone Boulevard and 70th Avenue,~~ shall be 80 feet.

All heights shall be measured from the #base plane#.

86-30
SPECIAL PERMIT TO MODIFY USE OR BULK REGULATIONS

For any ~~#development#, #enlargement#, alteration or change of #use# on a~~ #zoning lot# within the #Special Forest Hills District#, the City Planning Commission may permit modification of the #use# or #bulk# regulations, other than #floor area ratio# provisions, provided the Commission shall find that such:

(a) #use# or #bulk# modification will aid in achieving the general purposes and intent of the Special District;

(b) #use# modification will encourage a lively pedestrian environment along Austin Street;

(c) modification is the only practicable way to achieve the programmatic requirements of the ~~#development#~~ development;

(d) modification will enhance the distribution of #bulk# on the #zoning lot#;

(e) modification of #bulk# will permit adequate access of light and air to surrounding #streets# and properties; and

(f) ~~#development# or #enlargement#~~ #use# or #bulk# modification will relate harmoniously to the character of the surrounding area.

The Commission may prescribe appropriate conditions and safeguards to minimize adverse effects on the character of the surrounding area.

* * *

86-42
Location of Off-Site Accessory Parking Spaces for ~~Residences~~ Residential Uses

The applicable regulations for the location of permitted or required off-site #accessory# parking spaces for #residential uses# in Sections 36-42 (Off-Site Spaces for Residences) and 36-421 (Maximum distance from zoning lot) shall not apply in the #Special Forest Hills District#. In lieu thereof, such off-site parking spaces, which are #accessory# to a #residential use#, may also be located on any #zoning lot# within the Special District other than the #zoning lot# to which they are #accessory#.

86-43
Modification of Parking Requirement Waivers

The waiver provisions of Article III, Chapter 6 (Accessory Off-Street Parking and Loading Regulations), inclusive, shall be modified within the #Special Forest Hills District#, as follows:

(a) For any ~~new #residential #~~development# or #enlargement# containing #residences# ~~in the Special District~~, the waiver modification provisions set forth in Section 36-362 (For ~~new~~ developments or enlargements in other C1 or C2 Districts or in C4, C5 or C6 Districts), inclusive, shall not apply. In lieu thereof, the total number of #accessory# off-street parking spaces required in Section 36-30 (REQUIRED ACCESSORY OFF-STREET PARKING SPACES FOR RESIDENCES WHEN PERMITTED IN COMMERCIAL DISTRICTS), inclusive, shall be waived if the number of spaces for all #uses# on the #zoning lot#, required by the applicable regulations of Section 36-30, inclusive, is five spaces or fewer.

* * *

Article VIII - Special Purpose Districts

Chapter 7
Special Harlem River Waterfront District

87-00
GENERAL PURPOSES

The "Special Harlem River Waterfront District" established in this Resolution is designed to promote and protect public health, safety and general welfare. These general goals include, among others, the following specific purposes:

(a) maintain and reestablish physical and visual public access to and along the waterfront;

(b) create a lively and attractive built environment that will provide amenities and services for the use and enjoyment of area residents, workers and visitors;

(c) promote the pedestrian orientation of ground floor uses in appropriate locations, and thus safeguard a traditional quality of higher density areas of the City;

(d) encourage well-designed ~~new~~ development that complements the built character of the neighborhood;

(e) take advantage of the Harlem River waterfront and provide an open space network comprised of parks, public open space and public access areas;

(f) provide flexibility of architectural design within limits established to assure adequate access of light and air to streets and public access areas, and thus encourage more attractive and economic building forms; and

(g) promote the most desirable use of land and building development in accordance with the District Plan for the Harlem River waterfront.

* * *

87-02
General Provisions

In harmony with the general purpose and intent of this Resolution and the general purposes of the #Special Harlem River Waterfront District#, the regulations of the #Special Harlem River Waterfront District# shall apply ~~to all #developments#, #enlargements#, alterations and changes of #use# within the #Special Harlem River Waterfront District#, except as otherwise provided in this Chapter~~. The regulations of all other Chapters of this Resolution are applicable, except as superseded, supplemented or modified by the provisions of this Chapter. In the event of a conflict between the provisions of this Chapter and other regulations of this Resolution, the provisions of this Chapter shall control.

* * *

87-10
SPECIAL USE REGULATIONS

The #use# regulations of the underlying districts are modified in Sections 87-11 through 87-24, inclusive.

As used in this Section, “ground floor level” shall mean the finished floor level <u>of a #story# that is</u> within five feet of an adjacent public sidewalk or any other publicly accessible open area.

* * *

87-12

Location of Commercial Space

The provisions of Section 32-422 (Location of floors occupied by ~~non-residential~~ commercial uses) are modified to permit #residential uses# on the same #story# as a non- #residential use# provided no access exists between such #uses# at any level containing #residences# and provided any non-#residential uses# are not located directly over any #residential use#. However, such non-#residential uses# may be located over a #residential use# by authorization of the City Planning Commission upon a finding that sufficient separation of #residential uses# from non-#residential uses# exists within the #building#.

87-13
Streetscape Regulations

(a) Ground floor #use#

All #uses# shall have a depth of at least 25 feet from #building walls# facing a #shore public walkway#, mapped parkland or an #upland connection#. Lobbies and entrances may not occupy more than 20 feet or 25 percent of such #building# wall width, whichever is less. The level of the finished ground floor shall be located not higher than two feet above nor lower than two feet below the as-built level of the adjacent public sidewalk or other publicly accessible area.

For #buildings# on Parcels 1 through 6 that face a #shore public walkway#, mapped parkland or #upland connection#, not less than 20 percent of the ground floor level #floor area# of such portions of #buildings#, to a depth of 25 feet, shall consist of #uses# from Use Groups 6A, 6C, 6F, 8A, 8B and 10A, as set forth in Article III, Chapter 2.

(b) Transparency

Any building wall containing ground floor level #commercial# and #community facility uses# that faces a #shore public walkway#, mapped parkland or an #upland connection# shall be glazed with transparent materials which may include show windows, glazed transoms or glazed portions of doors. Such glazing shall occupy at least 70 percent of the area of each such ground floor level building wall, measured to a height of ten feet above the level of the adjoining public sidewalk or other publicly accessible area or #base plane#, whichever is higher. Not less than 50 percent of the area of each such ground floor level building wall shall be glazed with transparent materials and up to 20 percent of such area may be glazed with translucent materials.

(c) Security gates

All security gates that are swung, drawn or lowered to secure #commercial# or #community facility uses# ~~premises~~ shall, when closed, permit visibility of at least 75 percent of the area covered by such gate when viewed from the #street# or publicly accessible area, except that this provision shall not apply to entrances or exits to parking garages.

* * *

87-22
Special Retail Floor Area Requirement

(a) For each square foot of #commercial-#floor area# in a #building# occupied by the #uses# listed in paragraph (a)(1) of this Section, an equal or greater amount of #residential#, #community facility# or #commercial-#floor area# shall be provided from #uses# listed in paragraph (a)(2) of this Section.

* * *

(b) However, the City Planning Commission may authorize a modification or waiver of this provision upon finding that such #building# includes:

(1) a superior site plan that enables safe and efficient pedestrian connectivity to and between establishments and publicly accessible areas;

(2) a superior parking and circulation plan that reduces conflicts between pedestrian and vehicular traffic, minimizes open parking lots and limits conflicts between curb cuts;

(3) a design that enhances and is integrated with publicly accessible areas including provision of a public entrance fronting on a #waterfront public access area#;

(4) a variety of retail establishments; and

(5) #uses# that do not unduly affect the #residential uses# in the nearby area or conflict with future land use and ~~#development#~~ development of adjacent areas.

The City Planning Commission may prescribe appropriate conditions and safeguards to minimize adverse effects of any such #uses# on publicly accessible areas.

87-23
Maximum Width of Establishments

On Parcels 5 and 6, the width of any ground floor level #commercial# or #community facility# establishments facing a #shore public walkway# or #upland connection#, shall be limited to 60 feet for each #street wall# facing such #shore public walkway# or #upland connection#.

* * *

87-32
Street Wall Location and Building Base

(a) #Street wall# location

The #street wall# of ~~the #development# or #enlargement#~~ a #building# shall be located within five feet of the #street line# and extend along the entire frontage of the #zoning lot#, except that:

(1) ground floor level recesses up to three feet deep shall be permitted for access to #building# entrances;

(2) to allow for corner articulation, the #street wall# may be located anywhere within an area bounded by intersecting #street lines# and lines 15 feet from and parallel to such #street lines#;

(3) for #buildings# that are required to locate at least one main front entrance facing a #shore public walkway#, pursuant to Section 87-24 (Location of Building Entrances), no portion of the #street wall# containing such entrance shall be closer to the #shore public walkway# than the main front entrance; and

(4) no portion of a #building# facing a #shore public walkway#, except on Parcel 1, shall exceed a width of 300 feet.

However, on Parcel 1, in order to accommodate a sewer easement located within an area bounded by the eastern boundary of the #shore public walkway#, East 149th Street, a line 120 feet south of and parallel to East 149th Street and a line 120 feet east of and parallel to the #shore public walkway#, no #street wall# shall be required along that portion of East 149th Street and any fire apparatus access road within such easement area. Such area not ~~#developed#~~ developed as a fire apparatus access road and open to the sky shall be at least 35 percent planted and shall not be used for parking or loading. Furthermore, in the

event such area contains a driveway, it shall be screened from the #shore public walkway# and East 149th Street, except for curb cuts and pedestrian paths, with densely planted evergreen shrubs maintained at a height of three feet.

(b) Minimum and maximum base heights

The #street wall# ~~of a #development# or #enlargement#~~ shall rise without setback to a minimum base height of six #stories# or 60 feet, or the height of the #building#, whichever is less, and a maximum base height of eight #stories# or 85 feet, whichever is less, before a setback is required. However, on Parcels 5 and 6, for #street walls# facing a #shore public walkway#, the minimum base height shall be 20 feet and the maximum base height shall be four #stories# or 40 feet, whichever is less, before a setback is required. Any portion of a #building or other structure# that does not exceed such maximum base heights shall hereinafter be referred to as a "building base."

All portions of #buildings <u>or other structures</u># that exceed the maximum base heights set forth in this paragraph, (b), shall be set back from the #street wall# ~~of the #building#~~ at least ten feet along a #shore public walkway#, mapped parkland and Exterior Street, and at least 15 feet along an #upland connection#.

For ~~#developments# or #enlargements#~~ <u>#buildings#</u> that exceed a height of eight #stories# or 85 feet, except on Parcels 5, 6, 7 and 9, not more than 40 percent of the #aggregate width of street walls# facing a #shore public walkway# shall rise without setback to at least a height of six #stories# or 60 feet, whichever is less, and at least 40 percent of the #aggregate width of street walls# facing a #shore public walkway# shall rise without setback to at least a height of eight #stories# or 85 feet, whichever is less.

* * *

87-33
Towers

All #stories# of a ~~#development# or #enlargement#~~ <u>#building#</u> located partially or wholly above the applicable transition height set forth in paragraph (c) of Section 87-32 shall be considered a "tower" and shall comply with the provisions of this Section. For #zoning lots# with less than 130,000 square feet of #lot area#, only one tower shall be permitted. For #zoning lots# with 130,000 square feet of #lot area# or more, not more than two towers shall be permitted.

* * *

87-42
Sidewalks

In the event that Parcel 1 is #developed# with #mixed use buildings#, as defined in Section 123-11, sidewalks shall be provided on Parcel 1, as follows:

(a) Sidewalks with a depth of at least 15 feet, measured perpendicular to the curb of a #street#, shall be provided along the entire Exterior Street and East 149th Street frontage of a #zoning lot#. In locations where the width of the sidewalk within the #street# is less than 15 feet, a sidewalk widening shall be provided on the #zoning lot# so that the combined width of the sidewalk within the #street# and the sidewalk widening equals 15 feet. However, existing #buildings# to remain on the #zoning lot# need not be removed in order to comply with this requirement.

(b) A 22 foot wide walkway shall extend east of and along the #Parcel 1 building line#, linking East 149th Street and mapped parkland, or a fire apparatus access road if such road is ~~#developed#~~ <u>provided</u> adjacent to mapped parkland. In the event that a parking lot is ~~#developed#~~ <u>provided</u> east of such walkway, the easternmost seven feet of such walkway shall be densely planted with evergreen shrubs maintained at a maximum height of three feet above the adjoining walkway. Such walkway and planting strip may be interrupted to allow vehicular or pedestrian access.

(c) Any driveway located east of the #Parcel 1 building line# that extends along a sewer easement and intersects Exterior Street shall have curbs and sidewalks with a minimum width of 13 feet along each curb, which may be interrupted to allow for vehicular access to a parking lot.

All sidewalks and sidewalk widenings shall be constructed or improved to Department of Transportation standards, shall be at the same level as the adjoining public sidewalks, and shall be accessible to the public at all times.

87-50
SPECIAL PARKING REGULATIONS

The following provisions shall apply to all parking facilities:

* * *

(d) Design requirements for enclosed off-street parking facilities

All enclosed off-street parking facilities shall be located either entirely below the level of any #street# or open area accessible to the public upon which such facility fronts, or when located above grade, in compliance with the following provisions:

(1) The provisions of this paragraph, (d)(1), shall apply to facilities facing a #shore public walkway#, an #upland connection#, mapped parkland, or the northern #street line# of 138th Street.

Such facilities shall be located at every level above grade, behind #commercial#, #community facility# or #residential floor area# with a minimum depth of 25 feet as measured from any building wall facing a #shore public walkway#, or facing that portion of an #upland connection# or mapped parkland located west of the #Parcel 1 building line# so that no portion of such parking facility is visible from the #shore public walkway#, #upland connection# or mapped parkland. All such parking facilities shall be exempt from the definition of #floor area#.

On Parcel 6, the ground floor of a #building# within 60 feet of the intersection of Exterior Street and East 138th Street shall be occupied to a depth of 25 feet with #commercial#, #community facility# or #residential floor area# so that no portion of a parking facility is visible from such portion of Exterior Street or East 138th Street.

* * *

(f) Roof parking

Any roof of a facility containing off-street parking spaces, not otherwise covered by a #building#, that is larger than 400 square feet, shall be landscaped. Up to five percent of such roof area may be used for mechanical equipment, provided that such mechanical equipment is screened from view by a fence which is at least 75 percent opaque or by at least three feet of dense planting. Up to 25 percent of such roof area may be accessible solely from an adjacent #dwelling unit# and the remaining roof area shall be accessible for the recreational use of the occupants of the #building# in which it is located. Hard surfaced areas shall not cover more than 60 percent of such roof area.

* * *

87-61
Special Public Access Provisions

The provisions of 62-50 (GENERAL REQUIREMENTS FOR VISUAL CORRIDORS AND WATERFRONT PUBLIC ACCESS AREAS) shall apply to #developments, enlargements#, alterations or changes of #use#, as follows:

(a) #Shore public walkways#

(1) The #shore public walkway# shall be constructed at an elevation of two feet above the highest level of the Oak Point Rail Link, except that:

(i) on Parcels 6 and 7, no such elevation requirement shall apply;

(ii) on Parcel 5, if commercial or public utility vehicle storage, as listed in Use Group 16C, is #developed# or #enlarged# as the primary #use# on the #zoning lots#, such elevation requirement shall not apply. However, ~~if such commercial or public utility vehicle storage is not #developed# or #enlarged# as the primary #use# on the #zoning lots#~~ for any other #use#, such elevation requirement shall only apply along the westernmost section of the #shore public walkway# to a depth of 40 feet; and

(iii) on all #zoning lots#, a #shore public walkway# shall be required to meet the grade of an existing adjacent #street#, which may include deviating from such elevation requirement where necessary.

* * *

(4) On Parcel 5, if a commercial or public utility vehicle storage #use# is #developed# or #enlarged# as the primary #use# on the parcel, the #shore public walkway# requirements set forth in Section 62-62 shall apply, except that:

* * *

(iv) in the event that the #upland connection# on Parcel 6 has not been ~~#developed#~~ provided, a ten foot wide pedestrian walkway between the #shore public walkway# and Exterior Street shall be provided on Parcel 5 adjacent to such #upland connection# location.

* * *

87-62
Certification to Waive Supplemental Public Access Area Requirement

For Parcels 1 and 2, the requirement to provide a designated #supplemental public access area#, as indicated on Map 2 in the Appendix to this Chapter, may be waived by the Chairperson of the City Planning Commission, provided that:

(a) the site plan includes a vehicular connection through the #zoning lot# pursuant to the design guidelines set forth in Section 87-41 (Fire Apparatus Access Roads);

(b) a declaration of restrictions has been provided pursuant to Section 87-64;

(c) the design meets all applicable connection requirements set forth in Section 87-66 (Connection with Adjacent Zoning Lots); and

(d) such a vehicular connection either:

(1) on Parcel 1, provides access between East 149th Street and Exterior Street, serving all #buildings# along the #shore public walkway# and mapped parkland; or

(2) on Parcel 2, provides a bi-directional connection between Exterior Street at its intersection with East 144th Street and the southernmost #lot line# ~~of the #development#~~.

87-63

Certification to Allow Fire Apparatus Access Road Turnaround in Shore Public Walkways

On Parcels 2, 3 and 4, a dead-end fire apparatus access road turnaround, as defined in the New York City Fire Code Section 503.2.5 (Dead-ends), may by certification, extend into the designated #shore public walkway#, provided that:

(a) a declaration of restrictions has been provided pursuant to Section 87-64;

(b) a fire apparatus access road abutting the shared #zoning lot line# between the #development#, #enlargement#, alteration or change of #use# seeking certification under this Section and Parcels 2, 3 or 4 does not exist; and

(c) the fire apparatus access road serves as a segment of a bi-directional loop road along the #shore public walkway#, providing a connection to Exterior Street at the northeast corner of Parcel 2 and a connection to Exterior Street at the southeast corner of Parcel 4.

* * *

87-64
Declaration of Restrictions

* * *

For certifications proposed pursuant to Section 87-63, at the time a declaration of restrictions has been provided by the adjacent #development#, #enlargement#, alteration or change of #use#, pursuant to this Section, permitting vehicular connection between #zoning lots#, the #zoning lot# containing a previously-constructed fire apparatus access turnaround shall be responsible for the following actions on the portion of the connection on such #zoning lot#:

(a) deconstructing the fire apparatus access road turnaround;

(b) re-landscaping the area that had extended into the #shore public walkway#, so as to create the conditions of the immediately surrounding #shore public walkway#, which may include any combination of tree planting, laying sod, removing pavers, or any other required landscaping action;

(c) extending all required sidewalks that had remained short of the #lot line# to the shared #lot line# to connect to the required adjacent sidewalks and enable pedestrian movement across ~~#developments#~~ Parcels; and

(d) complying with all applicable waterfront rules, #street# regulations and the New York City Fire Code.

* * *

87-66
Connection with Adjacent Zoning Lots

The following provisions apply to #developments#, #enlargements#, alterations or changes of #use# pursuing certification pursuant to either Section 87-62 (Certification to Waive Supplemental Public Access Area Requirement) or Section 87-63 (Certification to Allow Fire Apparatus Access Road Turnaround in Shore Public Walkways).

On each of Parcels 2, 3 and 4, and only among Parcels 2, 3 and 4, a #development#, #enlargement#, alteration or change of #use# shall provide a connection for bi-directional vehicular travel at an adjacent #zoning lot line# if such adjacent #zoning lot# has previously constructed a connection that terminates at the shared #lot line#. Any connection of fire apparatus access roads across a shared #zoning lot line# must meet the grade of and maintain the street width of the existing adjacent private street. In addition to such physical shared #lot line# connection, a #private road# declaration shall be provided pursuant to the provisions of Section 87-64. A connection need not be opened unless and until such declaration of restrictions, in accordance with Section 87-64, has been recorded against the adjacent #zoning lot#.

When no connection for vehicular travel terminating at the opposite side of a shared #~~zoning~~ lot line# exists, a dead-end fire apparatus access road turnaround may be constructed, pursuant to Section 87-63, which may extend into the designated #shore public walkway#. Such certification is also contingent upon providing a declaration of restrictions, in accordance with Section 87-64.

* * *

Article IX - Special Purpose Districts
Chapter 1
Special Lower Manhattan District

Table of Contents

GENERAL PURPOSES 91-00
General Provisions..... 91-01
Definitions..... 91-02
District Maps..... 91-03
Subdistrict and Core Areas..... 91-04
Applicability of the Quality Housing Program..... 91-05
Applicability of Article VII Provisions..... 91-06

SPECIAL USE REGULATIONS..... 91-10
Modification of Use Regulations in C5 Districts..... 91-11
Uses on Designated Retail Streets..... 91-12
Sign Regulations..... 91-13

FLOOR AREA AND DENSITY REGULATIONS..... 91-20
Maximum Floor Area Ratio ~~Regulations for Residential Buildings and the Residential Portion of Mixed Buildings~~..... 91-21
Floor Area Increase Regulations ~~for Non-Residential and Mixed Buildings~~..... 91-22
~~As-of-Right Bonuses for Increased Floor Area~~ Floor Area Increase for Provision of Recreation Space..... 91-23
Floor Area Bonus for Public Plazas ……. 91- 24
Special Permit Bonuses for Increased Floor Area..... ~~91-24~~ 91-25

HEIGHT AND SETBACK AND LOT COVERAGE REGULATIONS..... 91-30
Street Wall Regulations..... 91-31
Setback Regulations..... 91-32
Lot Coverage Regulations..... 91-33
Maximum Horizontal Dimension for Tall Buildings..... 91-34

MANDATORY DISTRICT PLAN ELEMENTS..... 91-40
Regulations for Designated Retail Streets..... 91-41
Pedestrian Circulation Space..... 91-42
Off-Street Relocation or Renovation of a Subway Stair..... 91-43

OFF-STREET PARKING, LOADING AND CURB CUT REGULATIONS..... 91-50
Accessory Off-Street Parking for Residential Uses in Converted Buildings..... 91-51
Curb Cut Regulations..... 91-52

REGULATIONS FOR THE SOUTH STREET SEAPORT SUBDISTRICT..... 91-60
General Provisions..... 91-61
Definitions..... 91-62
Transfer Areas Map..... 91-63
Transfer of Development Rights from Granting Lots..... 91-64
Addition of Development Rights to Receiving Lots..... 91-65
Modification of Bulk Regulations..... 91-66
Recordation..... 91-67
Designated Pedestrian Ways..... 91-68
Special Permit for Development of Piers 9, 11, 13 and 14.... 91-69

SPECIAL REGULATIONS FOR CERTAIN AREAS..... 91-70
Authorization for the Modification of Required Public Amenities..... 91-71
~~Certification for Development on the Block Bounded by Liberty, Washington, Cedar and West Streets..... 91-72~~

Special Permit for Development over the Approaches to the Brooklyn Battery Tunnel..... ~~91-73~~ 91-72
Special Provisions for Battery Park Underpass/South Street.. ~~91-74~~ 91-73

Appendix A - District Maps
Map 1 Special Lower Manhattan District
Map 2 Street Wall Continuity Types 1, 2A, 2B & 3
Map 3 Street Wall Continuity Types 4 & 5
Map 4 Designated Retail Streets
Map 5 Curb Cut Prohibitions
Map 6 South Street Seaport Subdistrict
Map 7 Subway Station Improvement Areas

91-00
GENERAL PURPOSES

* * *

91-01
General Provisions

Except as modified by the express provisions of the #Special Lower Manhattan District#, the regulations of the underlying zoning districts shall remain in effect.

Requirements that apply generally throughout the District are set forth in the provisions for this Chapter. The provisions of Section 91-40 (MANDATORY DISTRICT PLAN ELEMENTS) specify planning and urban design features ~~to be provided in connection with new #developments# or #enlargements#~~ that are primarily oriented toward the accommodation and well-being of pedestrians.

* * *

Special regulations governing the development of three specific sites in the #Special Lower Manhattan District# are set forth in the following Sections:

~~Section 91-72 (Certification for Development on the Block Bounded by Liberty, Washington, Cedar and West Streets)~~

Section ~~91-73~~ 91-72 (Special Permit for Development over the Approaches to the Brooklyn Battery Tunnel)

Section ~~91-74~~ 91-73 (Special Provisions for Battery Park Underpass/South Street).

91-02
Definitions

For the purposes of this Chapter, matter in italics is defined ~~in this Section or~~ in Sections 12-10 or 91-62 (Definitions).

~~Special Lower Manhattan District~~
~~(repeated from Section 12-10)~~

~~The "Special Lower Manhattan District" is a Special Purpose District designated by the letters "LM" in which special regulations set forth in Article IX, Chapter 1, apply to all #developments#. The #Special Lower Manhattan District# appears on the #zoning maps# superimposed on other districts, and its regulations supplement or modify those of the districts on which it is superimposed.~~

* * *

91-04
Subdistrict and Core Areas

In order to carry out the purposes and provisions of this Chapter, the South Street Seaport Subdistrict and the Historic and Commercial Core are established within the #Special Lower Manhattan District# and include specific regulations designed to advance the purpose of these areas:

(a) The South Street Seaport Subdistrict

* * *

(b) The Historic and Commercial Core

The Historic and Commercial Core has been established to promote #~~-~~development ~~-~~# compatible with existing #buildings# that border the area whose street plan has been accorded landmark status by the New York City Landmarks Commission as the Streetplan of New Amsterdam and Colonial New York. Height and setback provisions for the Historic and Commercial Core are set forth in Sections 91-31 through 91-33.

The Core is bounded by Broadway and Wall, Whitehall and Water Streets, as shown on Map 1 (Special Lower Manhattan District) in Appendix A.

91-05
Applicability of the Quality Housing Program

Within the #Special Lower Manhattan District#, ~~#residential buildings# or the #residential# portion of a #mixed building#~~ #buildings# containing #residences# may be #developed# or #enlarged# in accordance with the provisions of Article II, Chapter 8 (The Quality Housing Program), except that the #bulk# regulations of Section 28-11 shall be superseded by the #bulk# regulations of this Chapter. Recreation space required pursuant to Section 28-30 (RECREATION SPACE AND PLANTING AREAS) shall be in addition to any recreation space required pursuant to this Chapter.

* * *

91-10
SPECIAL USE REGULATIONS

91-11
Modification of Use Regulations in C5 Districts

* * *

91-12
Uses on Designated Retail Streets

On designated retail #streets#, as shown on Map 4 in Appendix A, for #buildings developed# or #enlarged# after August 27, 1998, where the ground floor level of such #development# or #enlarged# portion of the #building# fronts upon ~~for any #development or #enlargement# fronting on~~ such #streets#, #uses# within #stories# ~~located~~ on the ground floor or with a floor level~~, or~~ within five feet of #curb level#, shall be limited to only those #uses# permitted by the underlying regulations and Section 91-111 (Additional uses in C5 Districts), other than automobile showrooms or plumbing, heating or ventilating equipment showrooms or any of the #uses# listed in Use Groups 6B, 6E, 7C, 7D, 8C, 8D, 9B, 10B, 11 or 12D.

* * *

91-20
FLOOR AREA AND DENSITY REGULATIONS

91-21
Maximum Floor Area Ratio ~~Regulations for Residential Buildings and the Residential Portion of Mixed Buildings~~

The basic maximum #floor area ratio# on a #zoning lot# is specified in the Table in Section 91-22 (Floor Area Increase Regulations) and may be increased only pursuant to the #floor area# increase and bonus provisions of this Chapter.

Notwithstanding the #floor area# increase and bonus provisions of this Chapter, the maximum permitted #floor area ratio# on a #zoning lot# for #residential use# shall be 12.0.

~~4/30/03~~

~~**91-211**~~
~~**Maximum floor area ratio for residential uses**~~

~~Within the #Special Lower Manhattan District#, the maximum #floor area ratio# for a #residential building# or the #residential# portion of a #mixed building# shall be determined in accordance with the regulations of the underlying district and may not be increased except as provided in Sections 91-212 (Floor area increase in a C6-4 District) or 91-213 (Floor area increase for provision of recreation space). The maximum #floor area ratio# for the #residential# portion of a #mixed building# is specified in the table in Section 91-22 (Floor Area Regulations for Non-Residential and Mixed Buildings) showing maximum #floor area ratios# and #floor area# bonuses, by zoning district, for non-#residential# and #mixed buildings#.~~

~~In a C4-6 District, the maximum #floor area ratio# for a #residential building# or the #residential# portion of a #mixed building# shall be 3.4.~~

~~10/17/07~~

~~**91-212**~~
~~**Floor area increase in a C6-4 District**~~

~~In a C6-4 District, the #residential floor area# of a #building# may exceed 10.0 in accordance with the provisions of Sections 23-90 (INCLUSIONARY HOUSING) or 91-231 (Floor area bonus for public plazas), provided that the maximum #residential floor area ratio# shall not exceed 12.0.~~

~~**91-213**~~ *(Section moved and renumbered 91-23)*
~~**Floor area increase for provision of recreation space**~~

* * *

91-22
Floor Area Increase Regulations ~~for Non-Residential and Mixed Buildings~~

~~For non-#residential buildings# or #mixed buildings# within the #Special Lower Manhattan District#, t~~ The basic maximum #floor area ratio# of the underlying district may be increased by the inclusion of specific additional bonus #floor area# for a maximum #floor area ratio# as specified in the following table.

The provisions of paragraph (c) of Section 74-792 (Conditions and limitations), pertaining to the transfer of development rights from landmark sites, shall be subject to the restrictions on the transfer of development rights (FAR) of a landmark "granting lot" as set forth in this table. Wherever there may be an inconsistency between any provision in Section 74-79 and the

following table, the provisions of the table shall apply.

MAXIMUM FLOOR AREA RATIOS AND FLOOR AREA BONUSES
BY ZONING DISTRICT ~~FOR NON-RESIDENTIAL AND MIXED BUILDINGS~~

BASIC AND MAXIMUM FLOOR AREA RATIOS (FAR)

Means for Achieving Permitted FAR Levels on a #Zoning Lot#	#Special Lower Manhattan District# except within Core or Subdistrict				Historic & Comm Core	South Street Seaport Subdistrict and all waterfront #zoning lots#				
	R8	C6-4	C5-3 C5-5 C6-9	M1-4	C5-5	C2-8	C4-6	C6-2A	C5-3	C6-9
Basic maximum FAR	6.02[1] 6.5[3]	10[2,3,4]	10[4] 15[2,3]	2.0[2] 6.5[3]	10[4] 15[2,3]	2.0[2] 3.4[3] 10[4]	3.4[2,3,4]	6.0[2] 6.02[4] 6.5[3]	10[4] 15[2,3]	15
Maximum as-of-right #floor area# bonus for #public plazas#	NA	2	3	NA	NA	NA	NA	NA	NA	NA
Maximum as-of-right #floor area# bonus for Inclusionary Housing (23-90)	NA	2	NA	NA	NA	NA	NA	NA	NA	NA
Maximum FAR with as-of-right #floor area# bonuses	6.02[1] 6.5[3]	12	18	2.0[2] 6.5[3]	15	2.0[2] 3.4[3] 10.0[4]	3.4	6.0[2] 6.02[4] 6.5[3]	15	15
Maximum special permit #floor area# bonuses: subway station improvements & #covered pedestrian spaces#	NA	2	3	NA	3	NA	NA	NA	NA	NA
Maximum FAR with as-of-right and/or special permit #floor area# bonuses	6.02[1] 6.5[3]	12	18	2.0[2] 6.5[3]	18	2.0[2] 3.4[3] 10.0[4]	3.4	6.0[2] 6.02[4] 6.5[3]	15	15
Development rights(FAR) of a landmark lot for transfer purposes(74-79)	NA	10	15.0[5] 18.0[6]	NA	15	NA	NA	NA	NA	NA
Maximum total FAR of designated receiving sites in South Street Seaport Subdistrict (91-60)	NA	NA	NA	NA	NA	NA	3.4	8.02	21.6[7]	21.6[7]
Maximum FAR with transferred development rights from landmark #zoning lot# and as-of-right and special permit #floor area# bonuses	6.02[1] 6.5[3]	14	21.6	2.4[2] 7.8[3]	21.6	NA	3.4	8.02	21.6[7]	21.6[7]

1. maximum #floor area ratio# and minimum #open space ratio# shall be determined in accordance with the provisions of Article II, Chapter 3

2. for a #commercial# or, where permitted, #manufacturing use#

3. for a #community facility use#

4. for ~~the~~ a #residential~~# portion of a #mixed building#~~ use#

5. if receiving lot is located in a zoning district with a basic maximum FAR of less than 15

6. if receiving lot is located in a zoning district with a basic maximum FAR of 15

7. for lots greater than 30,000 square feet, may be exceeded by special permit (Section 91-663)

91-~~213~~ 23
Floor ~~a~~ Area ~~i~~ Increase for ~~p~~ Provision of ~~r~~ Recreation ~~s~~ Space

In C5-3, C5-5 and C6-9 Districts, the #residential floor area ratio# of a #zoning lot# ~~of a #building#~~ may be increased to 12.0, provided that ~~the #building# includes~~ recreation space for the #residential# occupants of the #development#, or the #building# containing the #enlargement# is provided in an amount not less than 13 square feet for each #rooming unit#, 16.25 square feet for each #dwelling unit# or a total area of at least 5,000 square feet, whichever is greater.

Such recreation space may be located at any level, including a roof, and shall:

(a) be restricted to #residential# occupants of the ~~#building#~~ #development# or the #building# containing the #enlargement# and their guests for whom no admission or membership fees may be charged;

(b) be directly accessible from a lobby or other public area served by the #residential# elevators;

(c) be landscaped, including trees or shrubbery, except where covered or developed with recreational facilities and seating areas;

(d) contain not less than 500 square feet of continuous area on a single level with no dimension of less than 15 feet; and

(e) have not less than 50 percent of the area open from its lowest level to the sky. The remaining portion may be roofed and up to 50 percent of its perimeter may be enclosed. In no event may more than 25 percent of the required recreation space be fully enclosed. All enclosures shall be transparent except when located within the #building#. Covered areas shall contain recreation facilities or seating areas.

A copy of requirements (a) through (e) shall be permanently posted in a conspicuous place within each recreation space.

~~**91-23**~~
~~**As-of-Right Bonuses for Increased Floor Area**~~

~~Within the #Special Lower Manhattan District#, as-of-right bonuses for increased #floor area# are allowed only in accordance with the provisions of this Section.~~

~~11/15/07~~

91-~~231~~ 24
Floor ~~a~~ Area ~~b~~Bonus for ~~p~~Public ~~p~~ Plazas

The maximum permitted #floor area# on a #zoning lot# may be increased in accordance with the following regulations, ~~provided that~~ where a #public plaza# ~~, which shall~~ is provided that meets the requirements of Section 37-70 (PUBLIC PLAZAS)~~, is included in the #development# or #enlargement#~~:

(a) ~~a~~ A #floor area# bonus for a #public plaza# shall not be permitted-for any #development# or #enlargement# that is located within:

(1) the Historic and Commercial Core;

(2) the South Street Seaport Subdistrict; or

(3) 50 feet of a #street line# of a designated #street# on which:

(i) retail continuity is required pursuant to Section 91-41 (Regulations for Designated Retail Streets); or

(ii) #street wall# continuity is required pursuant to the regulations for Type 1 or Type 2A #street walls# pursuant to Section 91-31 (Street Wall Regulations).

(b) For each square foot of a #public plaza#, the basic maximum #floor area# permitted by Section 91-22 (Floor Area Increase Regulations ~~for Non-Residential and Mixed Buildings~~) may be increased, in C6-4 Districts, by six square feet to a maximum #floor area# ratio of 12.0, and, in C5-3, C5-5 and C6-9 Districts, by ten square feet to a maximum #floor area# ratio of 18.0.

(c) When a #public plaza# that meets the requirements for a #floor area# bonus is located on a #zoning lot# divided by a district boundary, the bonusable #floor area# may be credited to either portion of the #zoning lot#, notwithstanding the location of the #public plaza# or the date of the creation of the #zoning lot#. The amount of bonusable #floor area# permitted on either portion of the #zoning lot# shall not exceed the maximum amount of #floor area# permitted on such portion if it were a separate #zoning lot# subject to all other provisions of Article VII, Chapter 7.

~~7/26/01~~

~~**91-232**~~
~~**Floor area bonuses for improvements on the block bounded by Liberty, Washington, Cedar and West Streets**~~

~~For any #development# on the #block# bounded by Liberty, Washington, Cedar and West Streets within the former Special Greenwich Street Development District, certain improvements, as certified by the City Planning Commission, shall be eligible for as-of-right bonuses for #floor area#, pursuant to the provisions of Section 91-72.~~

91- ~~24~~ 25
Special Permit Bonuses for Increased Floor Area

Within the #Special Lower Manhattan District#, the City Planning Commission may grant the following special permits for increased #floor area# in accordance with the provisions of this Section.

91-~~241~~ 251
Special permit for subway station improvements

Within the #Special Lower Manhattan District#, the City Planning Commission may grant, by special permit, a #floor area# bonus ~~for #buildings#~~ on #zoning lots# that provide subway station improvements, pursuant to the provisions of Section 74-634 (Subway station improvements in commercial zones of 10 FAR and above in Manhattan).

The total additional #floor area# permitted on the #zoning lot# shall not exceed the maximum amount permitted in the underlying district by the provisions of Sections 91-21 (Maximum Floor Area Ratio ~~Regulations For Residential Buildings and the Residential Portion of Mixed Buildings~~) or 91-22 (Floor Area Increase Regulations ~~for Non-Residential and Mixed Buildings~~).

For the purposes of the Special District, the #zoning lot# ~~for the #development# or #enlargement#~~ that will receive the #floor area# bonus shall be located within a #Commercial District# with a #floor area ratio# of 10.0 or above and shall be adjacent to a subway station where major improvements have been provided. Upon completion of the improvement, the #zoning lot# will physically adjoin a subway station mezzanine, platform, concourse or connecting passageway.

The subway stations where such improvements are permitted are listed in the following table and shown on Map 7 (Subway Station Improvement Areas) in Appendix A.

Station	Line
Bowling Green	Lexington Ave ~~IRT~~
Broad St	Nassau St ~~BMT~~
Broadway-Nassau St	8th Ave ~~IND~~
Fulton St	Nassau St ~~BMT~~
	Broadway-7th Ave ~~IRT~~
	Lexington Ave ~~IRT~~
Brooklyn Bridge-City Hall	Lexington Ave ~~IRT~~
Chambers St	Nassau St ~~BMT~~
Chambers St	Broadway-7th Ave ~~IRT~~
Chambers St	8th Ave ~~IND~~
Park Place	Broadway-7th Ave ~~IRT~~
World Trade Center	8th Ave ~~IND~~
City Hall	Broadway-60th St ~~BMT~~
Cortlandt St-WTC	Broadway-7th Ave ~~IRT/~~
Cortlandt St	Broadway-60th St ~~BMT~~
~~Fulton St~~	~~Nassau St BMT~~
~~Fulton St~~	~~Broadway-7th Ave IRT~~
~~Fulton St-Broadway~~	~~Lexington Ave IRT~~
~~Park Place~~	~~Broadway-7th Ave~~ ~~IRT~~
Rector St	Broadway-7th Ave ~~IRT/~~
Rector St	Broadway-60th St ~~BMT~~
~~South Ferry~~	~~Broadway-7th Ave~~ ~~IRT~~
Wall St	Broadway-7th Ave ~~IRT~~
Wall St	Lexington Ave ~~IRT~~

Whitehall St-South Ferry
~~South Ferry~~
~~World Trade Center~~

Broadway-60th St ~~BMT~~
Broadway-7th Ave
~~8th Ave IND~~

91-~~242~~ 252
Special permit for covered pedestrian space

In C5-3, C5-5, C6-4 and C6-9 Districts within the #Special Lower Manhattan District#, except within the South Street Seaport Subdistrict, the City Planning Commission may grant, by special permit, a #floor area# bonus for a #commercial#, ~~or~~ #community facility ~~development~~# or #mixed building# that provides #covered pedestrian space# on a #zoning lot#, in accordance with the provisions of Section 74-87 (Covered Pedestrian Space).

The total additional #floor area# permitted on the #zoning lot# shall not exceed the maximum amount permitted in the underlying district by the provisions of Sections 91-21 (Maximum Floor Area Ratio ~~Regulations For Residential Buildings and the Residential Portion of Mixed Buildings~~) and 91-22 (Floor Area Increase Regulations ~~for Non-Residential and Mixed Buildings~~).

91-30
HEIGHT AND SETBACK AND LOT COVERAGE REGULATIONS

For all #buildings or other structures# in the #Special Lower Manhattan District#, the height and setback regulations of the underlying districts are superseded by the regulations of this Section.

The height of all #buildings or other structures# shall be measured from #curb level#.

91-31
Street Wall Regulations

For the purposes of applying the #street wall# regulations of this Section, #developments# shall include alterations and #enlargements# that change the height, width or location of a #street wall#.

~~Within the #Special Lower Manhattan District#, a~~ All portions of #buildings or other structures# located above the maximum base heights specified in paragraph (a) of this Section shall provide a setback in accordance with the regulations of Section 91-32 (Setback Regulations).

(a) Within the Special District, the maximum base height shall be 85 feet or 1.5 times the width of the #street# upon which the #building# fronts, whichever is greater, except as provided for the following types of #street wall# regulations:

(1) #Street wall# regulations: Type 1

For #developments# ~~or #enlargements#~~ that front upon a #street# indicated as "Type 1" on Map 2 (Street Wall Continuity Types 1, 2A, 2B & 3) in Appendix A, #street walls# shall extend along the entire #street# frontage of the #zoning lot# not occupied by existing #buildings# to remain, to a minimum base height of 150 feet or the height of the #building#, whichever is less. The maximum base height shall be 250 feet.

(2) #Street wall# regulations: Type 2A

For #developments# ~~or #enlargements#~~ that front upon a #street# indicated as "Type 2A" on Map 2 in Appendix A, #street walls# shall extend along such entire #street# frontage of the #zoning lot#, not occupied by existing #buildings# to remain, to a minimum base height of 85 feet or the height of the #building#,

whichever is less. The maximum base height shall be 150 feet.

(3) #Street wall# regulations: Type 2B

For #developments# ~~or #enlargements#~~ that front upon a #street# indicated as "Type 2B" on Map 2 in Appendix A, #street walls# shall extend along at least 60 percent of such #street# frontage of the #zoning lot#, not occupied by existing #buildings# to remain, to a minimum base height of 85 feet or the height of the #building#, whichever is less. The maximum base height shall be 150 feet.

(4) #Street wall# regulations: Type 3

For #developments# ~~or #enlargements#~~ that front upon a #street# indicated as "Type 3" on Map 2 in Appendix A, #street walls# shall extend along the entire #street# frontage of the #zoning lot#, not occupied by existing #buildings# to remain, to a minimum base height of 60 feet, five stories, or the height of the #building#, whichever is less. The maximum base height shall be 85 feet or 1.5 times the width of the #street# upon which the #building# fronts, whichever is greater.

(5) #Street wall# regulations: Type 4

For #developments# ~~or #enlargements#~~ that front upon a #street# within the Historic and Commercial Core, indicated as "Type 4" on Map 3 (Street Wall Continuity Types 4 & 5) in Appendix A, the maximum base height shall be 100 feet.

(6) #Street wall# regulations: Type 5~~s~~

For #developments# ~~or #enlargements#~~ that front upon a #street# indicated as "Type 5" on Map 3 (Street Wall Continuity Types 4 & 5) in Appendix A, no setbacks are required for any portion of a #building#.

(b) For #developments# ~~or #enlargements#~~ that front upon a #street# indicated as "Type 1" or "Type 2A," at least 70 percent of the #aggregate width of street-walls# shall be located on such #street line#. For #developments# ~~or #enlargements#~~ that front upon a #street# indicated as “Type 2B,” at least 60 percent of the #aggregate width of street walls# shall be located within 10 feet of such #street line#. For #developments# ~~or #enlargements#~~ that front upon a #street# indicated as "Type 3," at least 70 percent of the #aggregate width of street walls# shall be located within 10 feet of such #street line#. The remaining 30 percent of the #aggregate width of street walls# may be located beyond such #street lines# in compliance with:

(1) the #outer court# regulations of Article II, Chapter 3, for #residential# portions of #buildings#;

(2) the #outer court# regulations of Article II, Chapter 4, for all other portions of #buildings#; or

(3) the requirements of Section 37-50 where such areas are pedestrian circulation spaces.

(c) When a #building# fronts on two intersecting #streets# for which different maximum base heights are specified, the higher maximum base height may wrap around to the #street# with the lower maximum base height for a distance along the #street line# of 100 feet. However, "Type 5" #street walls# shall not be permitted to wrap around to the intersecting #street#.

(d) Arcades and sidewalk widenings that meet the design standards of Section 37-53 (Design Standards for Pedestrian Circulation Spaces) shall be permitted along any #street# indicated as "Type 1," "Type 2A" or "Type 3," pursuant to paragraphs (a), (b) or (c) of

this Section, provided such arcade or sidewalk widening extends along the entire #block# frontage or abuts another arcade, existing on August 27, 1998, of equal width and height or another sidewalk widening of equal width. In such case, the #street wall# requirements for paragraph (b) of this Section shall be measured from the permitted arcade or sidewalk widening.

91-32
Setback Regulations

~~Within the #Special Lower Manhattan District#~~ In accordance with the provisions of Section 91-31, setbacks are required for any portion of a #building or other structure# that exceeds the maximum base heights specified for the applicable #street# in Section 91-31 (Street Wall Regulations).

Required setbacks shall be provided at a height not lower than any minimum base height or 60 feet where none is specified and not higher than any maximum base height specified for the applicable #street# in Section 91-31. The depth of the setback shall be determined by the #lot area# of the #zoning lot# ~~on which the #building# is located~~, as shown in the following table:

REQUIRED DEPTH OF SETBACKS

#Lot area# of #zoning lot#	Minimum setback depth
Less than 15,000 square feet	10 feet
15,001 to 30,000 square feet	15 feet
Greater than 30,000 square feet	20 feet

For "Type 1" and "Type 2A and 2B" #street walls#, the required setbacks shall be measured from the #street line#.

For "Type 3" #street walls#, the required setbacks shall be measured from a line drawn at or parallel to the #street line# so that at least 70 percent of the #aggregate width of street walls# of the #building# at the minimum base height are within such line and the #street line#.

For all other #street walls#, the required setbacks shall be measured from a line drawn at or parallel to the #street line# so that at least 50 percent of the #aggregate width of street walls# of the #building# at the minimum base height are within such drawn line and the #street line#. However, setbacks are not required for #street walls# fronting upon the major portion of a bonused #public plaza#.

For #buildings# within the Historic and Commercial Core as shown on Map 1 in Appendix A, any #building# or portion of a #building# may be located within the required setback area beneath a #sky exposure plane# that rises from a height of 100 feet above the #street line# over the #zoning lot# at a vertical distance of six to a horizontal distance of one.

91-33
Lot Coverage Regulations

~~Except within the Historic and Commercial Core, any #development# or #enlargement#, or portion thereof, shall have a maximum #lot coverage# of 65 percent of the #lot area# of the #zoning lot# a~~ Above the maximum base height specified in Section 91-31 (Street Wall Regulations), up to a height of 300 feet, the maximum #lot coverage# of any #zoning lot# shall be 65 percent. Above a height of 300 feet, ~~any #development# or #enlargement#, or portion thereof, shall have a~~ the maximum #lot coverage# of any #zoning lot# shall be ~~of~~ 50 percent ~~of the #lot area# of the #zoning lot#~~.

However, ~~W~~within the Historic and Commercial Core, ~~any #development# or #enlargement#, or portion thereof, shall have a maximum #lot coverage# of 75 percent of the #lot area# of the #zoning lot#~~ above the maximum base height specified in Section 91-31, up to a height of 300 feet, the maximum #lot coverage# of any #zoning lot# shall be 75 percent. Above a height of 300 feet, ~~any #development# or #enlargement#, or portion thereof, shall have a~~ the maximum #lot coverage# of any #zoning lot# shall be ~~of~~ 60 percent ~~of the #lot area# of the #zoning lot#.~~

For ~~#developments# or #enlargements#~~ #buildings# fronting on more than one #street# where different maximum base heights are specified, the maximum #lot coverage# regulations specified in this Section~~, up to a height of 300 feet,~~ shall apply at horizontal planes at heights corresponding to the different maximum base heights. The #lot coverage# at the level of the lowest plane shall apply to the portion of a #zoning lot# located beyond 100 feet from any #street# with a higher maximum base height. The #lot coverage# at the level of each subsequent higher plane shall apply to the portion of the #zoning lot# located beyond 100 feet from any #street# with a higher maximum base height, and shall also include those portions of the #zoning lot# where lower base heights apply ~~above the lowest maximum base height specified for such #developments# or #enlargements#~~. The highest horizontal plane shall be established over the entire #zoning lot#.

91-34
Maximum Horizontal Dimension for Tall Buildings

For any portion of a ~~#development# or #enlargement#~~ #building# above a height of 300 feet, the maximum horizontal dimension, measured in any direction, shall not exceed 175 feet.

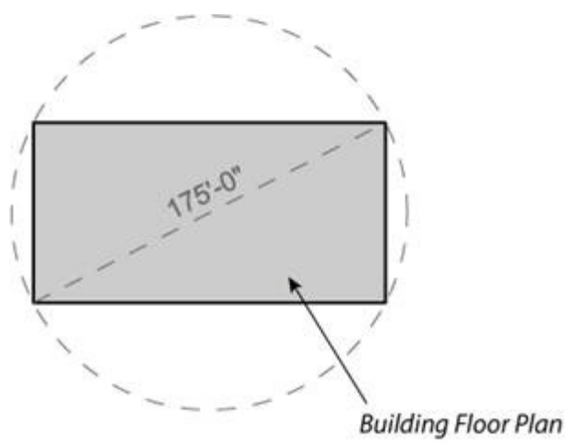

DIAGRAM OF MAXIMUM HORIZONTAL DIMENSION

91-35
Modification of Street Wall, Setback, Lot Coverage and Maximum Horizontal Dimension Regulations

The City Planning Commission, by special permit, may modify:

(a) the #street wall# requirements and minimum base heights of Section 91-31 (Street Wall Regulations);

(b) the setback requirements of Section 91-32; and

(c) where such #zoning lots# contain #buildings# existing on December 15, 1961, that exceed a height of 300 feet, the #lot coverage# regulations of Section 91-33 and the maximum horizontal dimension set forth in Section 91-34 (Maximum Horizontal Dimension for Tall Buildings), provided such modifications are limited to that portion of the #development# or #enlargement# between 300 and 325 feet in height, and provided the #lot coverage# of such portion does not exceed 55 percent.

~~As a condition for~~ In order to grant~~ing~~ such special permit, the Commission shall find that:

(1) such modifications will result in a site plan consistent with existing scale and streetscape patterns;

(2) such modifications will ensure a harmonious relationship between the #development# or #enlargement# and the surrounding area;

(3) such #street wall# modifications will enhance pedestrian circulation by providing pedestrian amenities that relieve sidewalk congestion;

(4) such setback, #lot coverage# or horizontal dimension modifications will not unduly obstruct access to light and air to surrounding #streets# and properties; and

(5) such setback, #lot coverage# or horizontal dimension modifications will result in a built form that maintains an appropriate relationship between tower and base portions of the #development# or #enlargement#.

The Commission may prescribe appropriate conditions and safeguards to minimize adverse effects on the character of the surrounding area.

91-40
MANDATORY DISTRICT PLAN ELEMENTS

91-41
Regulations for Designated Retail Streets

The #use# regulations of this Section 91-41, inclusive, shall apply to #buildings developed# after August 27, 1998 and to #buildings enlarged# on the ground floor level after August 27, 1998.

91-411
Location of required retail space

For any #development# or #enlargement# fronting on the ground floor level of designated retail #streets#, as shown on Map 4 in Appendix A, the #street# frontage of the #building# shall be allocated exclusively to the #uses# set forth in Section 91-12 (Uses on Designated Retail Streets). However, #uses# located within lobby or entrance spaces, subway station improvements or pedestrian circulation spaces that do not front on the ground floor level of the #street# shall be in accordance with the provisions for permitted #uses# of the underlying district.

Where the #street# frontage occupied by all #building# entrances is 20 feet or more in width, the amount of #street# frontage occupied by lobby space, entrance space and~~/or a~~ #building# entrance recess shall not exceed, in total, 40 linear feet or 25 percent of the #building's# total #street# frontage, whichever is less, exclusive of any frontage occupied by a relocated subway stair or the entrance area to a bonused subway station improvement.

Storefronts for permitted ground floor #uses# shall be no more than 10 feet from the #street line# or, where an #arcade# is provided with supporting columns at the #street line#, no more than 10 feet from the supporting columns.

* * *

91-42
Pedestrian Circulation Space

Within the boundaries of the #Special Lower Manhattan District#, all ~~new~~ #developments# or #enlargements# constructed after August 27, 1998 on #zoning lots# of at least 5,000 square feet

that contain more than 70,000 square feet of new #floor area# shall provide pedestrian circulation space on such #zoning lot# in accordance with the provisions of Section 37-50.

Pedestrian circulation space shall not be required if any of the following conditions exist:

(a) the #zoning lot# is entirely occupied by a #building# of no more than one #story# in height;

(b) the #zoning lot# is an #interior lot# fronting on a #wide street# with less than 80 feet of #street frontage#;

(c) the #zoning lot# is an #interior# or #through lot# fronting on a #street# or #streets# ~~listed in~~ with Type 1, Type 2A, Type 2B, Type 3, Type 4 or Type 5 #street wall# regulations, as set forth in paragraph (a) of Section 91-31 (Street Wall Regulations);

(d) the #zoning lot# is a #through lot# and both #street frontages# are less than 25 feet in length; or

(e) the #zoning lot# is located in a C6-2A or C6-9 District within the South Street Seaport Subdistrict.

91-43
Off-Street Relocation or Renovation of a Subway Stair

Where a #development# or #enlargement# is constructed on a #zoning lot# that contains at least 5,000 square feet of #lot area# and fronts on a sidewalk containing a stairway entrance or entrances into a subway station, the existing entrance or entrances shall be relocated from the #street# onto the #zoning lot#. The new entrance or entrances shall be provided in accordance with the provisions of Section 37-40 (OFF-STREET RELOCATION OR RENOVATION OF A SUBWAY STAIR). A relocated or renovated subway stair may be counted as pedestrian circulation space in accordance with the provisions of Section 37-50.

The subway stations where such improvements are required are listed in the following table and shown on Map 7 (Subway Station Improvement Areas) in Appendix A.

Station	Line
Bowling Green	Lexington Ave ~~IRT~~
Broad St	Nassau St ~~BMT~~
Broadway-Nassau St	8th Ave ~~IND~~
Fulton St	Nassau St ~~BMT~~
	Broadway-7th Ave ~~IRT~~
	Lexington Ave ~~IRT~~
Brooklyn Bridge-City Hall	Lexington Ave ~~IRT~~
Chambers St	Nassau St ~~BMT~~
Chambers St	Broadway-7th Ave ~~IRT~~
Chambers St	8th Ave ~~IND~~
Park Place	Broadway-7th Ave ~~IRT~~
World Trade Center	8th Ave ~~IND~~
City Hall	Broadway-60th St ~~BMT~~
Cortlandt St-WTC	Broadway-7th Ave ~~IRT/~~
Cortlandt St	Broadway-60th St ~~BMT~~
~~Fulton St~~	~~Nassau St BMT~~

~~Fulton St~~	~~Broadway-7th Ave IRT~~
~~Fulton St-Broadway~~	~~Lexington Ave IRT~~
~~Park Place~~	~~Broadway-7th Ave IRT~~
Rector St	Broadway-7th Ave ~~IRT/~~
Rector St	Broadway-60th St ~~BMT~~
~~South Ferry~~	~~Broadway-7th Ave IRT~~
Wall St	Broadway-7th Ave ~~IRT~~
Wall St	Lexington Ave ~~IRT~~
Whitehall St-South Ferry	Broadway-60th St ~~BMT~~
~~South Ferry~~	Broadway-7th Ave
~~World Trade Center~~	~~8th Ave IND~~

91-50
OFF-STREET PARKING, LOADING AND CURB CUT REGULATIONS

The off-street parking regulations of Article 1, Chapter 3 (Comprehensive Off-Street Parking Regulations in Community Districts 1, 2, 3, 4, 5, 6, 7 and 8 in the Borough of Manhattan and a Portion of Community Districts 1 and 2 in the Borough of Queens) and the loading regulations of the underlying districts apply to the #Special Lower Manhattan District#, except as supplemented or modified by the provisions of this Section.

91-51
Accessory Off-Street Parking for Residential Uses in Converted Buildings

#Accessory# off-street parking spaces shall be permitted for #dwelling units# in #non-residential ~~non-#residential~~ buildings# erected prior to January 1, 1977, or portions thereof, that are #converted# to #residential use#, provided:

(a) no more than 200 spaces or a number of spaces equal to 20 percent of the number of #dwelling units# in the #converted building# ~~on the #zoning lot#~~, whichever is less, shall be permitted;

(b) no curb cut shall be permitted on any #street# where the #converted #building# has a #street# frontage of 40 feet or less;

(c) no portion of any such parking facility shall be more than 23 feet above #curb level#;

(d) no exhaust vents shall open onto any #street# or #public park# or publicly accessible #open space#, and no portion of the parking facility, other than entrances and exits, shall be visible from adjoining #zoning lots#, #streets# or parks; and

(e) all such parking facilities shall be provided on the same #zoning lot# as the #residential uses# to which they are #accessory#, except as otherwise provided in Section 91-511 (Authorization for off-site parking facilities for converted buildings).

91-511
Authorization for off-site parking facilities for converted buildings

The City Planning Commission may authorize #accessory# residential off-site parking spaces for #non-residential ~~non-#residential~~ buildings# erected prior to January 1, 1977, or portions thereof, that are #converted# to #residential use#, to be provided in a fully-enclosed #building# on a #zoning lot# within the #Special Lower Manhattan District# other than the #zoning lot# that contains the #residential use#, provided the Commission finds that:

(a) such #accessory# off-site parking spaces are conveniently located in relation to the #residential use#, and in no case further than 600 feet from the #zoning lot# containing the #residential use#;

(b) such location of the #accessory# off-site parking facility will permit better site planning for the #building# converted# to #residential use#;

(c) the #accessory# off-site parking facility will not create or contribute to traffic congestion or unduly inhibit vehicular and pedestrian movement;

(d) that the #accessory# off-site parking facility is located so as to draw a minimum of additional vehicular traffic to and through local ~~#residential~~ residential #streets#; and

(e) that such #accessory# off-site parking facility shall contain parking spaces #accessory# only to #residential uses#.

The number of #accessory# off-site parking spaces authorized in accordance with the provisions of this Section shall be recorded on the certificates of occupancy, temporary and permanent, for both the #residential use# and the #accessory# off-site parking facility.

* * *

91-60
REGULATIONS FOR THE SOUTH STREET SEAPORT SUBDISTRICT

91-61
General Provisions

* * *

91-62
Definitions

For purposes of this Section, matter in italics is defined in Section 12-10 (DEFINITIONS) or within this Section.

* * *

Granting lot

Within the South Street Seaport Subdistrict, "granting lot" is a #zoning lot# or a closed or discontinued portion of a #street# or air space over a #street # which is identified as a #granting lot#, as identified on Map 6 (South Street Seaport Subdistrict) in Appendix A, upon which ~~#development#~~ development is regulated by contract, lease, covenant, declaration or otherwise to assure compliance with the purposes of this Subdistrict and from which #development rights# may be transferred. Such #zoning lots# and closed portions of #streets# or air space over #streets# are identified on the map of the transfer areas (Map 6) as Parcels 6, 7 and 9 and the adjacent hatched #street# areas.

* * *

91-64
Transfer of Development Rights from Granting Lots

Within the South Street Seaport Subdistrict, #development rights# from each of the #granting lots# may be conveyed or otherwise disposed of:

(a) directly to a #receiving lot#; or

(b) to a #person# for subsequent disposition to a #receiving lot#, all in accordance with the provisions of this Subdistrict, except that with respect to #zoning lots# located on Parcels 6, 7 and 9, as identified on Map 6 (South Street Seaport Subdistrict) in Appendix A, only those #development rights# in excess of the larger of the following conditions may be so conveyed or otherwise disposed of:

(1) an amount equal to the product of the #lot area# of each of such #zoning lots# multiplied by 5.0; or

(2) the total #floor area# of all existing #buildings# on any such #zoning lots#.

The City Planning Commission shall certify such initial transfer from the #granting lots#. Any #person# may convey its interest in all or a portion of such #development rights# to another #person# but such #development rights# may only be used ~~for a #development#~~ on a #receiving lot#.

91-65
Addition of Development Rights to Receiving Lots

Within the South Street Seaport Subdistrict, all or any portion of the #development rights# transferred from a #granting lot# may be added to the #floor area# of all or any one of the #receiving lots# in an amount not to exceed the ratio of 10 square feet of #development rights# to each square foot of #lot area# of such #receiving lot#, except that with respect to a #receiving lot# having a #lot area# of less than 30,000 square feet, the total #floor area ratio# shall not exceed 21.6. However, if a #receiving lot# is located in a C4-6 District, the total #floor area ratio# shall not exceed 3.4 and if a #receiving lot# is located in a C6-2A District, the total #floor area ratio# shall not exceed 8.02. #Development rights# transferred to a #receiving lot# may be applied to ~~the #development# of~~ a #mixed building# to increase the #floor area# of the #residential#, #commercial# and/or #community facility# portions of such #building# so that the maximum #floor area# for such #building# may be increased by the aggregate of #development rights# so transferred. In no event shall the # residential floor area ratio# ~~of a #residential building#, or portion thereof,~~ exceed 12.0.

The City Planning Commission shall certify that any ~~proposed #development#~~ #zoning lot# that utilizes such transferred #development rights# conforms to this Section and, for those #receiving lots# within the Urban Renewal Area, to the regulations and controls of the Urban Renewal Plan.

91-66
Modification of Bulk Regulations

91-661
Bulk modifications in C6-2A Districts

Within the South Street Seaport Subdistrict, for any #zoning lot# located in a C6-2A District, the underlying height and setback regulations shall apply, except the maximum #building# height shall be 120 feet. No minimum base height shall apply, and the depth of a required setback along a #narrow street# shall be at least 10 feet. No #lot coverage# regulations shall apply to #corner lots#. Furthermore, the provisions of Article II, Chapter 8 (The Quality Housing Program), shall not apply.

91-662
Authorization for modification of bulk provisions and public space in C6-9 Districts

In the South Street Seaport Subdistrict, the City Planning Commission may authorize:

(a) the alteration of any public amenity, open or enclosed, for which a #floor area# bonus has been granted, provided that the Commission finds that such modifications improve the

intended public purpose of the amenity; or

(b) the elimination or reduction of an existing public amenity, open or enclosed, for which a #floor area# bonus has been granted, provided that a new ~~and/~~or improved public amenity, open or enclosed, is supplied elsewhere on, or within proximity to, the #zoning lot#, and the Commission finds that:

(1) the public amenity to be eliminated no longer serves its original purpose; and

(2) the proposed new or improved public amenity will provide a greater public benefit than the amenity to be eliminated or reduced and will better serve the purposes of the #Special Lower Manhattan District#; and

(c) the modification of the applicable height, setback, lot coverage and distance between buildings requirements for any ~~new~~ #development# or #enlargement# on a designated #receiving lot# that will incorporate transferred #development rights#, provided the Commission finds that the modifications:

(1) provide an appropriate distribution of #bulk# on the #zoning lot#;

(2) permit adequate ~~access of~~ light and air to the ~~occupants or users of the~~ #development# or #enlargement# and adjoining properties as well as the surrounding #streets#; and

(3) will not impair the use and desirability of any public amenity that may be created or improved under the provisions of paragraph (b) of this Section.

If a #receiving lot# contains an existing #building#, such authorization shall incorporate any previous height and setback or other bulk modifications, granted prior to December 11, 2001, by the Board of Standards and Appeals, for such existing #building#.

The Commission may prescribe appropriate conditions and safeguards in connection with the grant of such authorization.

91-663
Special permit for bulk modifications

Within the South Street Seaport Subdistrict, the City Planning Commission may modify, by special permit, the height and setback and #lot coverage# regulations of Section 91-30, provided that:

(a) either of the following conditions have been met:

(1) that the developer has obtained negative easements limiting the height of future #development# <u>or #enlargement#</u> to 85 feet or less on any adjoining #zoning lots# which are contiguous or would be contiguous to said #zoning lot# but for their separation by a #street# or #street# intersection, and such easements are recorded against such adjoining #zoning lots# by deed or written instrument. The Commission shall consider the aggregated areas of said #zoning lot# and the adjoining lots subject to such negative easements and the extent to which they achieve future assurance of light and air in determining the maximum permitted coverage. In no event shall such coverage exceed 80 percent of the #zoning lot# on which the #development# <u>or #enlargement#</u> will be located; or

(2) that the #lot coverage# for that portion of a #development# <u>or #enlargement#</u> below 300 feet may be increased to a maximum of 80 percent when additional #development rights# have been purchased and converted to increased #lot coverage#. The maximum percentage of #lot coverage# on such #receiving lot# shall be the sum of 65 percent plus one-half of one percent for every .10 by which the total #floor area ratio# on such #receiving lot# would exceed a #floor area

ratio# of 21.6, provided that the #development# or #enlargement# on such #receiving lot# has achieved a minimum #floor area ratio# of 18.0;

(b) In order to grant such special permit, the Commission shall make the following findings:

(1) the location of the #development# or #enlargement# and the distribution of #bulk# will permit adequate ~~access of~~ light and air to surrounding #streets# and properties;

(2) any modification of height and setback will provide for better distribution of #bulk# on the #zoning lot#; and

(3) such special permit will aid in achieving the general purposes and intent of the Subdistrict.

The Commission may prescribe appropriate conditions and safeguards to minimize adverse effects on the character of the surrounding area.

* * *

91-69
Special Permit for Development of Piers 9, 11, 13 and 14

Within the area bounded by South Street, the southerly edge of Pier 9, the U. S. Pierhead Line and the northerly edge of Pier 14, which, for the requirements of this Section, shall be deemed to be a single #zoning lot#, the City Planning Commission may, by special permit, permit modification of the bulk regulations, other than #floor area ratio# applicable to the #zoning lot#, and may modify or waive the requirements of Section 62-50 (GENERAL REQUIREMENTS FOR VISUAL CORRIDORS AND WATERFRONT PUBLIC ACCESS AREAS), in accordance with the provisions of this Section.

The special permit shall be subject to the condition that the property owner, principal lessee or licensee of property owner has entered into an agreement with the Department of Parks and Recreation to operate and maintain the publicly-accessible areas in accordance with Section 62-70 (MAINTENANCE AND OPERATION REQUIREMENTS FOR WATERFRONT PUBLIC ACCESS AREAS). For purposes of this Section, such publicly-accessible areas shall be deemed "waterfront public access areas."

In granting any such modifications, the Commission shall find that:

* * *

(f) the development plan is integrated with existing and proposed nearby ~~#developments#~~ development.

The Commission may prescribe additional appropriate conditions and safeguards to minimize adverse effects on the character of the waterfront and surrounding area.

91-70
SPECIAL REGULATIONS FOR CERTAIN AREAS

#Developments# or #enlargements# in the former Special Greenwich Street Development District built prior to August 27, 1998, will continue to be governed by the regulations in effect at the time of issuance of the building permit and can only be modified or altered by Sections 91-71 through ~~91-74~~ 91-73, inclusive.

91-71
Authorization for the Modification of Required Public Amenities

The City Planning Commission may authorize modifications of certain provisions of the former Special Greenwich Street Development District, eliminated on August 27, 1998, that mandated public amenities, as follows:

(a) For any mandatory or elective public amenities or improvements built pursuant to the regulations of the former Special District that resulted in an increase in the basic maximum #floor area ratio# or an increase in the adjusted basic maximum #floor area ratio#, the Commission may authorize:

* * *

(3) in the case of an amenity or improvement built in excess of the requirements necessary to generate the bonus #floor area# at the time of #development# or #enlargement#, the elimination of such portion of the amenity not tied to the bonus #floor area#, provided that the Commission finds that such portion is no longer useful or desirable.

* * *

~~**91-72**~~
~~**Certification for Development on the Block bounded by Liberty, Washington, Cedar and West Streets**~~

~~For the #block# bounded by Liberty, Washington, Cedar and West Streets, the City Planning Commission shall certify that the following improvements, eligible for as-of-right #floor area# bonuses in the amount specified, are included in any plans for a proposed #development#.~~

~~(a) The following mandatory improvements are eligible for as-of-right #floor area# bonuses:~~

~~(1) For an open pedestrian bridge with a minimum width of 15 feet spanning Washington Street near its intersection with Liberty Street to provide pedestrian access to the existing elevated public #open space# at the northern edge of the #block# bounded by Liberty, Washington, Albany and Greenwich Streets, as certified by the Commission, a #floor area# bonus shall be granted in the amount of 90 square feet per linear foot.~~

~~(2) For a pedestrian connection at least 15 feet wide with a minimum floor to ceiling height of 12 feet between the existing pedestrian bridge spanning West Street and the bridge required over Washington Street pursuant to paragraph (a)(1) of this Section, as certified by the Commission, a #floor area# bonus shall be granted in the amount of 100 square feet per linear foot.~~

~~This connection shall be at the same height as the new bridge, provide an integrated connection to the existing West Street bridge and be open to the public for the same hours as the West Street bridge. Ramps but not stairs may be incorporated into the pedestrian connection to adjust its height to the Washington and West Street bridges.~~

~~(b) An optional pedestrian connection of public access from the pedestrian connection specified in paragraph (a)(2) of this Section to #street# level may be provided by stair, ramp or escalator and shall be eligible for an as-of-right #floor area# bonus of 120 square feet per linear foot of stair or, if provided by escalators at least 32 inches wide, 20,000 square feet for the provision of a single run, and 30,000 square feet for the provision of a double run.~~

~~The #development# shall have its major pedestrian entrance and lobby on Liberty Street and be integrated with and provide unobstructed pedestrian access between the pedestrian connection specified in paragraph (a)(2) of this Section and the lobby of any new #building# on this #block#~~

~~No other #floor area# bonuses are permitted on the #block# unless the Commission has certified that the improvements specified in paragraphs (a) and (b) of this Section are included in any~~

~~plans for #development# on the #block#.~~

~~91-73~~ 91-72
Special Permit for Development Over or Adjacent to the Approaches to the Brooklyn Battery Tunnel

The City Planning Commission, by special permit, may allow:

(a) the unmapped air space above the approaches to the Brooklyn Battery Tunnel to be considered a single #zoning lot# and may allow the #development# or #enlargement# of a #building# on such unmapped air space, where the #zoning lot# for such #development# or #enlargement# shall include only that portion of the area above the approaches to the Brooklyn Battery Tunnel and contiguous areas of land or property that are covered by a permanent platform and not designated as approaches to the Brooklyn Battery Tunnel.

* * *

~~91-74~~ 91-73
Special Provisions for Battery Park Underpass/South Street

A #zoning lot# containing a #development#, or portion thereof, on a #waterfront zoning lot#, may be located within the volume above the upper limiting plane of the Battery Park Underpass/South Street, when such volume is eliminated, discontinued and closed. That portion of the #zoning lot# that lies above the Battery Park Underpass/South Street shall not be considered #lot area# for the purpose of computing maximum #floor area#; however, such portion shall be considered #lot area# for all other purposes of this Resolution.

Appendix A
District Maps

* * *

~~Map 7~~
~~Subway Station Improvement Areas~~
Map 7
Subway Station Improvement Areas

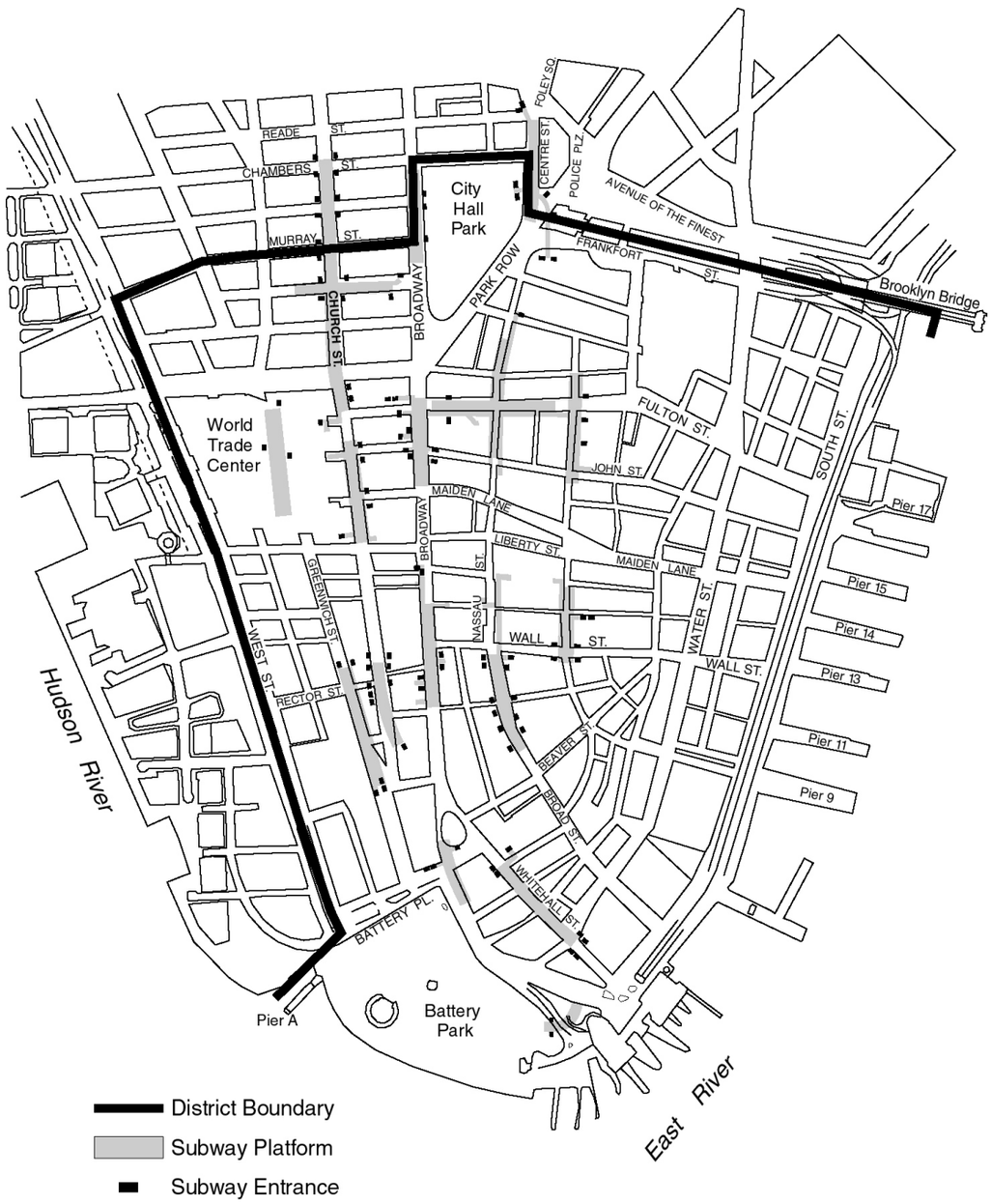

Section 91-00
Appendix A - Map 7

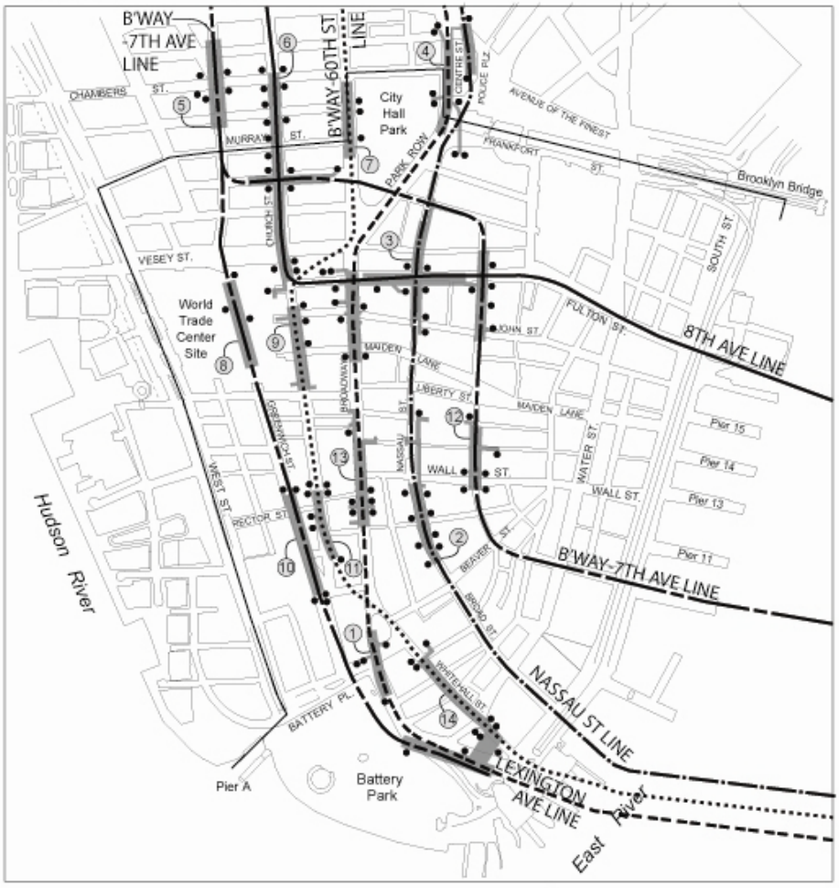

District Boundary
Subway Platform
Subway Entrance

8th Avenue Line
Broadway-7th Avenue Line
Broadway-60th Street Line
Lexington Avenue Line
Nassau Street Line

Stations

1. Bowling Green
2. Broad Street
3. Broadway-Nassau Street
   Fulton Street
4. Brooklyn Bridge-City Hall
   Chambers Street
5. Chambers Street
6. Chambers Street
   Park Place
   World Trade Center
7. City Hall
8. Cortlandt Street-WTC
9. Cortlandt Street
10. Rector Street
11. Rector Street
12. Wall Street
13. Wall Street
14. Whitehall Street-South Ferry

Article IX - Special Purpose Districts
Chapter 2
Special Park Improvement District

92-00
GENERAL PURPOSES

* * *

92-01
Definitions

Development

For purposes of this Chapter a "development" includes the construction of a new #building or other structure# on a #zoning lot#, the relocation of an existing #building# on another #zoning lot#, and an #enlargement# involving an increase in #lot coverage#.

~~Special Park Improvement District~~
~~(repeated from Section 12-10)~~

~~The "Special Park Improvement District" is a Special Purpose District designated by the letters "PI," in which special regulations set forth in Article IX, Chapter 2, apply to all #developments#. The #Special Park Improvement District# and its regulations supplement or supersede those of the districts on which it is superimposed.~~

* * *

92-04
Special Bulk Provisions

92-041
Maximum Floor Area Ratio

The maximum #floor area ratio# for any ~~#development# or #enlargement# on a~~ #zoning lot# shall not exceed 10.0. No #floor area# bonuses shall be permitted.

92-042
Mandatory front building walls along certain street lines

(a) Except as provided in paragraph (b) of this Section, the front building wall for all #developments# on #zoning lots# having frontage on Fifth Avenue or Park Avenue and for all #developments# along #street lines# within 50 feet of their intersection with the #street lines# of Fifth Avenue or Park Avenue, shall extend along the full length of its #street line# fronting on such #street# without setback for a height of 125 feet above #curb level# or the full height of the #building#, whichever is less.

* * *

Where the aggregate ~~length~~ width of balconies located along the front building wall, at the level of any #story#, exceeds 20 percent of the length of such front building wall, the front building wall may be set back not more than three feet from the #street line#.

The underlying district height and setback regulations apply along #street lines#, or portions thereof, not subject to the front building wall requirement.

92-043
Special height limitation

The maximum height of a #building or other structure#, or portion thereof, shall not exceed 19 #stories# or 210 feet above #curb level#, whichever is less.

92-05
Maximum Number of Accessory Off-Street Parking Spaces

In no case shall the number of #accessory# off-street parking spaces for a #residential use# exceed 40 percent of the number of #dwelling units#. In no case shall curb cuts for vehicular access be located on Fifth Avenue or Park Avenue or on a #street# within 50 feet of its intersection with the #street line# of Fifth Avenue or Park Avenue. No off-site #accessory# off-street parking facilities for any #use# shall be permitted within the Special District. All ~~#accessory#~~ parking spaces #accessory# to #residences# shall be designed and operated exclusively for the long term storage of the private passenger motor vehicles used by the occupants of such #residences#.

The parking requirements set forth in Sections 25-21, 25-31, 36-21 or 36-31 shall not apply to any #development# for which the Commissioner of Buildings has certified that there is no way to provide the required parking spaces with access to a #street# in conformity with the provisions of this Section.

The maximum number of permitted and the minimum number of required #accessory# off-street parking spaces for ~~new #developments# or #enlargements#~~ #zoning lots# in the area of the Special District located within Manhattan Community District 8 are set forth in Article I, Chapter 3.

Article IX - Special Purpose Districts
Chapter 3
Special Hudson Yards District

93-00
GENERAL PURPOSES

* * *

93-01
Definitions

* * *

~~Special Hudson Yards District (repeated from Section 12-10)~~

~~The "Special Hudson Yards District" is a Special Purpose District designated by the letters "HY" in which special regulations set forth in Article IX, Chapter 3, apply to all #developments#. The #Special Hudson Yards District# appears on the #zoning maps# superimposed on other districts and its regulations supplement and supersede those of the districts on which it is superimposed.~~

* * *

93-02
General Provisions

The provisions of this Chapter shall apply ~~to all #developments#, #enlargements#, #extensions#, alterations and changes of #use#~~ within the #Special Hudson Yards District#. The regulations of all other Chapters of this Resolution are applicable, except as superseded, supplemented or modified by the provisions of this Chapter. In the event of a conflict between the provisions of this Chapter and other regulations of this Resolution, the provisions of this Chapter shall control.

93-03
District Plan and Maps

The regulations of this Chapter are designed to implement the #Special Hudson Yards District# Plan~~ # ~~.

The District Plan includes the following ten maps:

* * *

93-10
USE REGULATIONS

* * *

93-122
Certification for residential use in Subdistricts A, B and E

Within the Large-Scale Plan Subdistrict A, Subareas B1 and B2 of the Farley Corridor Subdistrict B, and the South of Port Authority Subdistrict E, #residential use# shall be permitted only upon certification of the Chairperson of the City Planning Commission that the #zoning lot# on which such #residential use# is located contains the minimum amount of #commercial ~~#floor area#~~ floor area# required before #residential use# is allowed, as specified in Section 93-21 or 93-22, as applicable, and that for #zoning lots# in Subareas A2 through A5 of the Large-Scale Plan Subdistrict A, a certification pursuant to Section 93-34 (Distribution of Floor Area in the Large-Scale Plan Subdistrict A) has been made.

However, special regulations shall apply to #zoning lots# with phased ~~#development#~~ development, as follows:

(a) For #zoning lots# with less than 69,000 square feet of #lot area#, the Chairperson shall allow for phased ~~#development#~~ development, upon certification that a plan has been submitted whereby the ratio of #commercial ~~#floor area#~~ floor area# to #residential floor area#, in #buildings# in each phase, is no smaller than the ratio of the minimum amount of #commercial ~~#floor area#~~ floor area# required on the #zoning lot# before #residential use# is allowed, to the maximum #residential floor area# permitted on the #zoning lot# as specified in Section 93-21 or 93-22, as applicable, and

(b) For #zoning lots# with at least 69,000 square feet of #lot area#, the Chairperson shall allow for ~~a #residential~~ one or more ~~building# or~~ #buildings# containing #residences# to be #developed# or #enlarged# without the minimum amount of #commercial ~~#floor area#~~ floor area# required before #residential use# is allowed, as specified in Section 93-21 or 93-22, as applicable, upon certification that a plan has been submitted whereby one or more regularly-shaped portions of the #zoning lot# with a minimum area of 50,000 square feet are reserved for future ~~#development#~~ development, of not more than two million square feet of #commercial ~~#floor area#~~ floor area# on each such portion, and that, upon full ~~#development#~~ development of such #zoning lot#, the ratio of #commercial ~~#floor area#~~ floor area# to #residential floor area# shall be no smaller than the ratio of the minimum amount of #commercial ~~#floor area#~~ floor area# required on the #zoning lot# before #residential use# is allowed, to the maximum #residential floor area# permitted on the #zoning lot#, as specified in Section 93-21 or 93-22, as applicable.

All #developments# or #enlargements# so certified shall be permitted only in accordance with the provisions of this Chapter.

93-123
Location of residential use within buildings

The provisions of Section 32-422 (Location of floors occupied by ~~non-residential~~ commercial uses) are modified to permit #residential uses# on the same #story# as a non-#residential use# provided no access exists between such #uses# at any level containing #residences# and provided any non-#residential uses# are not located directly over any #residential uses#. However, such non-#residential uses# may be located over a #residential use# by authorization of the City Planning Commission upon a finding that sufficient separation of #residential uses# from non-#residential uses# exists within the #building#.

93-124
Restrictions on conversions of residential use

In #commercial districts# mapped within R8A Districts, a #residential use# existing on December 21, 2005, ~~and located on the ground floor or~~ within a #story# that has a floor level within five feet of #curb level# may not be #converted# to a #commercial use#.

93-13
Special Office Use Regulations

93-131
Certification for office use

The provisions of this Section shall apply to all #developments# or #enlargements# in the #Hudson Yards Redevelopment Area#, with the exception of Subdistrict F.

(a) No temporary certificate of occupancy from the Department of Buildings may be issued for any portion of a #development# or #enlargement# in the #Hudson Yards Redevelopment Area# that includes Use Group 6B offices ~~constructed~~ #developed# or #enlarged# after January 19, 2005, until the Chairperson of the Department of City Planning certifies to the Commissioner of Buildings that:

* * *

93-14
Ground Floor Level Requirements

The following provisions relating to retail continuity and transparency requirements shall apply to all Subdistricts in the #Special Hudson Yards District#, except that the provisions of this Section shall not apply along the northern #street# frontage of West 35th through West 39th Streets within 100 feet of Eleventh Avenue, as shown on Map 2 (Mandatory Ground Floor Retail) in Appendix A of this Chapter. However, any #zoning lot# fronting on such #streets# and partially within 100 feet of Eleventh Avenue may, as an alternative, apply the provisions of this Section to the entire West 35th, West 36th, West 37th, West 38th or West 39th Street frontage of the #zoning lot#.

(a) Retail continuity along designated streets in Subdistricts A, B, C, D and E

Map 2 in Appendix A of this Chapter specifies locations where the special ground floor #use# and transparency requirements of this Section apply. Such regulations shall apply along either 100 percent or 50 percent of the building's #street# frontage, as indicated on Map 2.

#Uses# ~~located on the ground floor level or~~ within #stories# that have a floor level within five feet of #curb level#, and within 50 feet of the #street line# shall be limited to #commercial uses# permitted by the underlying district, but not including #uses# listed in Use Groups 6B, 6E, 7C, 7D, 8C, 8D, 9B, 10B, 11 or 12D. Where a sidewalk widening is required, such #uses# shall be within 50 feet of the sidewalk widening line.

A building's #street# frontage shall be allocated exclusively to such #uses#, except for lobby space, entryways, entrances to subway stations, or other subway-related #uses# as described in Section 93-65 (Transit Facilities). In no event shall the length of #street# frontage (exclusive of any portion of such #street# frontage allocated to entrances to subway stations and other subway-related #uses#) occupied by lobby space or entryways exceed, in total, 40 feet or 25 percent of the building's total #street# frontage, whichever is less, except that the width of a lobby need not be less than 20 feet.

~~For any new #development# or #enlargement# on such designated #streets#, glazing shall be provided in accordance with the provisions set forth in paragraph (c) of this Section.~~

(b) Retail continuity along designated streets in Subdistrict F

Map 9 (Subdistrict F Mandatory Ground Floor Requirements) in Appendix A specifies locations where the special ground floor #use# and transparency requirements of this Section apply. Such regulations shall apply along either 100 percent or 70 percent of the building's #street# frontage, as indicated for each location on Map 9.

(1) Along Eleventh Avenue

The ground floor retail provisions established in paragraph (a) of this Section shall apply to the ground floor #street# frontage of #buildings# along Eleventh Avenue. In addition, if a #street# frontage is occupied by a bank, as listed in Use Group 6, such a #street# frontage shall not exceed a #street wall# width, in total, of 25 feet.

(2) Along designated streets other than Eleventh Avenue

In addition to the #uses# listed in paragraph (a) of this Section, the following #community facility uses# from Use Groups 3 and 4 as well as the following #commercial use# from Use Group 6B shall be permitted ~~on the ground floor level of a #building# or~~ within a #story# that has a floor level within five feet of #curb level# for frontages along designated #streets#, as shown on Map 9, other than Eleventh Avenue.

* * *

The remaining portion of the #street wall# may be occupied by #uses# listed in this Section, or by lobby space, mechanical space or entrances to #accessory# parking garages, provided that:

(i) the maximum width of a single lobby frontage shall be 40 feet, or 25 percent of the #street wall#, whichever is less. A maximum of two such lobbies shall be permitted along a single #street wall# frontage, provided that the minimum distance between such lobbies shall not be less than 120 feet; and

(ii) the maximum width of a #street wall# occupied by an entrance to #accessory# parking spaces shall not exceed 35 feet.

~~For any new #development# or #enlargement# on such designated #streets#, glazing shall be provided in accordance with the provisions set forth in paragraph (c) of this Section.~~

(c) Transparency requirements along designated streets in Subdistricts A, B, C, D, E and F

For any #development# or ground floor #enlargement# fronting on #streets# designated on Map 2 in Appendix A of this Chapter, glazing shall be provided in accordance with the provisions set forth in paragraph (c) of this Section.

Each ground floor level #street wall# of a #commercial# or #community facility use#, as set forth in this Section, shall be glazed with materials which may include #show windows#, glazed transoms or glazed portions of doors. Such glazing shall occupy at least 70 percent of the area of each such ground floor level #street wall#, measured to a height of 10 feet above the level of the adjoining sidewalk, or public access area, whichever is higher. Not less than 50 percent of the area of each such ground floor level #street wall# shall be glazed with transparent materials and up to 20 percent of such area may be glazed with translucent materials.

For #developments# or #enlargements# fronting upon Hudson Boulevard that are adjacent to existing #buildings# located within the Hudson Boulevard #street# bed or #public park#, the Hudson Boulevard #street wall# of such ~~new~~ #development# or #enlargement# shall be designed in a manner that will enable the glazing requirements of this Section to be met upon demolition of the #buildings# within such #street# bed or #public park# and, within six months of such demolition, such glazing requirements shall be complied with.

93-15
Security Gates

All security gates installed after January 19, 2005, that are swung, drawn or lowered to secure #commercial# or #community facility# premises shall, when closed, permit visibility of at least 75 percent of the area covered by such gate when viewed from the #street#, except that this provision shall not apply to entrances or exits to parking garages.

* * *

93-17
Modification of Sign Regulations

* * *

(b) Subdistrict F

For the purposes of calculating the permitted #surface area# of a #sign#, each site set forth on Map 7 (Subdistrict F Site Plan) in Appendix A shall be considered a separate #zoning lot#.

(1) Along the #High Line#

The #sign# regulations of the underlying districts shall not apply to #signs# located within 50 feet of the #High Line#, except for #signs# located entirely below the level of the #High Line bed#. In lieu thereof, the #sign# regulations of a C1 District shall apply, except that #accessory signs# located within the #High Line# frontage may have a maximum height of 20 feet above the level of the #High Line bed#.

No #signs# affixed to or resting upon the #High Line# shall be permitted, except as pursuant to a signage plan for the #High Line#, as authorized by the City Planning Commission, provided the Commission finds that such signage plan will:

(i) enhance the use of the #High Line# by providing signage that is consistent with the use of the #High Line# as a public open space;

(ii) provide, at a minimum, directional, informational and interpretive signage consistent with the use of the #High Line# as a public open space;

(iii) be integrated with the design of the #High Line# open space; and

(iv) not adversely affect ~~#development#~~ development adjacent to the #High Line# and in the surrounding neighborhood.

* * *

93-20
FLOOR AREA REGULATIONS

The #floor area# regulations of this Section 93-20 (FLOOR AREA REGULATIONS), inclusive, shall apply to #zoning lots#.

93-21
Floor Area Regulations in the Large-Scale Plan Subdistrict A

In the Large-Scale Plan Subdistrict A, the #floor area# provisions of this Section shall apply.

(a) Subareas A2 through A5

In Subareas A2 through A5, the basic maximum permitted #floor area ratio# shall be as specified in Row A in the table in this Section. Such #floor area ratio# may be increased to the maximum amount specified in Row B in the table, pursuant to Section 93-31 (District Improvement Fund Bonus) or the transfer of #floor area# or increase in the amount of #floor area# from the #Phase 2 Hudson Boulevard and Park# pursuant to Sections 93-32 or 93-33. For ~~#developments# or #enlargements#~~ #zoning lots# that have maximized their permitted #floor area# through such #floor area# bonus or transfer provisions, the permitted #floor area# may be further increased to the maximum amount specified in Row C in the table through the distribution of #floor area# from the Eastern Rail Yards Subarea A1, pursuant to Section 93-34. #Residential use# shall only be permitted ~~as part of a #development# or #enlargement#~~ on a #zoning lot# with a non-#residential floor area ratio#, as follows, or as provided for phased developments pursuant to Section 93-122 (Certification for residential use in Subdistricts A, B and E):

(1) 18.0 or more in Subareas A2 and A3

(2) 15.6 or more in Subarea A4

(3) 14.0 or more in Subarea A5.

Maximum Permitted Floor Area Ratio
within Subareas A2 through A5

	Subarea A2	Subarea A3	Subarea A4	Subarea A5
ROW A Basic maximum #floor area ratio# (FAR)	10.0 total 10.0 C 2.0 CF	10.0 total 10.0 C 2.0 CF	10.0 total 10.0 C 2.0 CF	10.0 total 10.0 C 2.0 CF
ROW B Maximum FAR through bonus pursuant to Section 93-31 or transfer or increase pursuant to Sections 93-32 or 93-33	18.0 total 18.0 C 2.0 CF	18.0 total 18.0 C 2.0 CF	18.0 total 18.0 C 2.4 R 2.0 CF	18.0 total 18.0 C 4.0 R 2.0 CF
ROW C Maximum FAR through distribution pursuant to Section 93-34	33.0 total 33.0 C 6.0 R 2.0 CF	24.0 total 24.0 C 6.0 R 2.0 CF	21.6 total 21.6 C 6.0 R 2.0 CF	20.0 total 20.0 C 6.0 R 2.0 CF

C = Commercial FAR
CF = Community Facility FAR
R = Residential FAR

(b) Eastern Rail Yards Subarea A1

The Eastern Rail Yards Subarea A1 shall generate a maximum #floor area ratio# of 19.0. The maximum #floor area ratio# for #commercial use# shall be 19.0, the maximum #floor area ratio# for #residential use# shall be 3.0, and the maximum #floor area ratio# for #community facility use# shall be 2.0. In order to promote a superior site plan, the amount of #floor area# permitted ~~to be #developed# or #enlarged#~~ in the subarea shall be limited, and unused #floor area# may be distributed as follows:

(1) The maximum #floor area ratio# for any ~~#development# or #enlargement#~~ #zoning lot# in the subarea shall be 11.0. The maximum #floor area ratio# for #commercial use# shall be 9.0, the maximum #floor area ratio# for #community facility use# shall be 2.0, and the maximum #floor area ratio# for #residential use# shall be 3.0. #Residential use# shall only be permitted ~~as part of a #development# or #enlargement#~~ on a #zoning lot# with a non-#residential floor area ratio# of 8.0 or more, or as provided for phased developments pursuant to Section 93-122 (Certification for residential use in Subdistricts A, B and E).

(2) Unused #floor area# may be distributed to #zoning lots# in Subareas A2 through A5 pursuant to Section 93-34, provided the total amount of distributed #floor area# does not exceed an amount equal to the #lot area# of the Eastern Rail Yards Subarea A1 multiplied by 10.0. Furthermore, the total #floor area# distributed to Subarea A2 shall not exceed 3,238,000 square feet.

(c) #Phase 2 Hudson Boulevard and Park#

For #zoning lots# or portions of #zoning lots# in the #Phase 2 Hudson Boulevard and Park#, the provisions of Section 93-32 (Floor Area Regulations in the Phase 2 Hudson Boulevard and Park) and 93-33 (Special Regulations for Residual Portions of Zoning Lots Partially Within the Phase 2 Hudson Boulevard and Park) shall apply.

Notwithstanding the provisions of this Section, the basic maximum permitted #floor area ratio# may be increased on an “adjacent lot” pursuant to Section 74-79 (Transfer of Development Rights from Landmark Sites), provided that the maximum #floor area# transferred from the

landmark lot does not exceed the basic maximum permitted #floor area ratio# less the total #floor area# of all #buildings# on the landmark lot.

93-22
Floor Area Regulations in Subdistricts B, C, D, E and F

(a) Subdistricts B, C, D and E

In Subdistricts B, C, D and E, the basic maximum #floor area ratio# is determined by the subdistrict and, where applicable, subarea, as specified in the table in this Section. The basic maximum #floor area ratios# for #non- #–residential buildings# are set forth in Row A, and the basic maximum #floor area ratios# for #buildings# containing #residences# are set forth in Row B. Such basic maximum #floor area ratios# may be increased to the amount specified in Row C only pursuant to Section 93-31 (District Improvement Fund Bonus) or as otherwise specified in Sections 93-221 through 93-224.

For a #zoning lot# with more than one #building#, the basic maximum #floor area ratios# set forth in Row A shall apply, provided that any #building# that is #developed# or #enlarged# after January 19, 2005 is wholly #non-residential#. If a #building# containing #residences# is #developed# or #enlarged# on such a #zoning lot# after January 19, 2005, the basic maximum #floor area ratios# set forth in Row B shall apply.

Notwithstanding the provisions of this Section, the basic maximum permitted #floor area ratio# may be increased on an "adjacent lot" pursuant to Section 74-79 (Transfer of Development Rights from Landmark Sites), provided that the maximum #floor area# transferred from the landmark lot does not exceed the basic maximum permitted #floor area ratio# less the total #floor area# of all #buildings# on the landmark lot.

Maximum Permitted Floor Area Ratio
within Subdistricts B through E

	Farley Corridor Subdistrict B				34th St Corridor Sub district C	Hell's Kitchen Subdistrict D			South of Port Auth. Sub district E
Subarea	Western Blocks	Central Blocks	Farley Post Office	Penn. Stn.		Subarea D1	Subarea D2	Subarea D3	
ROW A Basic maximum #floor area ratio# for ~~non-#residential~~ #non-residential buildings#	10.0 total 10.0 C 2.0 CF	12.0 total 12.0 C 2.0 CF	10.0 total 10.0 C 2.0 CF	10.0 total 10.0 C 2.0 CF	10.0 total 10.0 C 10.0 CF	7.5 total 2.0 C 7.5 CF	7.5 total 2.0 C 7.5 CF	7.5 total 6.0 C 7.5 CF	10.0 total 10.0 C 2.0 CF
ROW B Basic maximum FAR for #buildings# containing #residences#	NA	NA	10.0 total 10.0 C 6.0 R 2.0 CF	NA	6.5 total 6.5 C 6.5 R 6.5 CF	6.5 total 2.0 C 6.5 R 6.5 CF	6.5 total 2.0 C 6.5 R 6.5 CF	7.5 total 6.0 C 7.5 R 7.5 CF	NA
ROW C Maximum FAR through special #floor area# increases pursuant to Section 93-30,inclusive, Inclusionary Housing Section 93-23,inclusive, or Section 74-79, inclusive, as applicable.	21.6 total 21.6 C 6.0 R 2.0 CF	19.0 total 19.0 C 4.0 R 2.0 CF	NA	19.5 total 19.5 C 2.0 CF	13.0 total 13.0 C 12.0 R 12.0 CF	15.0 total 3.0 C 12.0 R 12.0CF	13.0 total 3.0 C 12.0 R 12.0CF	12.0 total 7.5 R 7.2 C 12.0CF	18.0 total 18.0 C 3.0 R 2.0 CF

C = Commercial FAR
CF = Community Facility FAR
R = Residential FAR

(b) Subdistrict F

In Subdistrict F, the #floor area ratio# provisions of Section 93-225 (Floor area regulations in Subdistrict F) shall apply.

93-221
Maximum floor area ratio in the Farley Corridor Subdistrict B

(a) Western Blocks Subarea B1

In the Western Blocks Subarea B1 of the Farley Corridor Subdistrict B, #residential use# shall only be permitted ~~as part of a #development# or #enlargement#~~ on a #zoning lot# with a #commercial ~~#floor~~ floor area ratio# of 12.0 or more, or as provided for phased developments in Section 93-122 (Certification for residential use in Subdistricts A, B and E).

(b) Central Blocks Subarea B2

In the Central Blocks Subarea B2 of Farley Corridor Subdistrict B, #residential use# shall only be permitted ~~as part of a #development# or #enlargement#~~ on a #zoning lot# with a #commercial ~~#floor~~ floor area ratio# of 15.0 or more, or as provided for phased developments in Section 93-122.

* * *

93-222
Maximum floor area ratio in the 34th Street Corridor Subdistrict C

In the 34th Street Corridor Subdistrict C, the basic maximum #floor area ratios# of ~~non-#residential~~ #non-residential buildings# are set forth in Row A in the table in Section 93-22 and may be increased to the amount specified in Row C pursuant to Section 93-31 (District Improvement Fund Bonus). The basic maximum #floor area ratios# of any #building# containing #residences# are set forth in Row B.

* * *

93-223
Maximum floor area ratio in Hell's Kitchen Subdistrict D

(a) Subareas D1 and D2

In Subareas D1 and D2 of Hell's Kitchen Subdistrict D, the basic maximum #floor area ratios# of ~~non-#residential~~ #non-residential buildings# are set forth in Row A in the table in Section 93-22 and may be increased to the amount specified in Row C pursuant to Section 93-31 (District Improvement Fund Bonus) or through the transfer of #floor area# from the #Phase 2 Hudson Boulevard and Park# as set forth in Section 93-32. The basic maximum #floor area ratios# of any #building# containing #residences# are set forth in Row B.

The #floor area ratio# of any #building# containing #residences# may be increased from 6.5 pursuant to Section 93-31 (District Improvement Fund Bonus) or through the transfer of #floor area# from the #Phase 2 Hudson Boulevard and Park# as set forth in Section 93-32, and pursuant to Section 23-90 (INCLUSIONARY HOUSING), as modified by Section 93-23, as follows:

(1) The #residential floor area ratio# may be increased from 6.5 to a maximum of 12.0 only if for every five square feet of #floor area# increase pursuant to Sections 93-31 or 93-32 there is a #floor area# increase of six square feet, pursuant to Section 23-90, as modified by Section 93-23.

(2) Any #floor area# increase above a #floor area ratio# of 12.0 shall be only pursuant to Section 93-31 or 93-32.

Furthermore, in Subarea D1, the #floor area ratio# on a #zoning lot# may exceed 13.0 only where the #community facility ~~#floor~~ floor area ratio# is not less than the excess of such #floor area ratio# above 13.0.

* * *

(d) Authorization for transfer of #floor area# for public facilities

For any #zoning lot# located partially in Subarea D2 and partially in Subarea D4, where such #zoning lot# is occupied by a #development# or #enlargement# that includes a

public facility, the City Planning Commission may authorize modifications to the #street wall# requirements of Subarea D4 and authorize modifications to the provisions of Section 77-22 (Floor Area Ratio) in order to allow the transfer of #floor area# from that portion of the #zoning lot# located in Subarea D4 to that portion located in Subarea D2, provided the #floor area ratio# for the #zoning lot# does not exceed the adjusted maximum #floor area ratio# for the #zoning lot# as specified in Section 77-22. In order to authorize such modifications, the Commission shall find that:

(1) such public facility provides a necessary service to the surrounding area;

(2) such transfer of #floor area# is necessary in order for the #development# or #enlargement# to achieve an adequate separation of #uses# on the #zoning lot#; and

(3) such transfer of #floor area# will not unduly increase the #bulk# of any ~~new~~ #development# or #enlargement#, density of population or intensity of #use# to the detriment of occupants of #buildings# on the #block# or surrounding #blocks#, and that any disadvantages to the surrounding area caused by reduced access of light and air will be more than offset by the advantages of the public facility to the local community and the City as a whole.

* * *

93-224
Maximum floor area ratio in the South of Port Authority Subdistrict E

In the South of Port Authority Subdistrict E, #residential use# shall only be permitted as part of a #development# or #enlargement# on a #zoning lot# with a #commercial ~~#floor~~ floor area ratio# of 15.0 or more, or as provided for phased developments in Section 93-122 (Certification for residential use in Subdistricts A, B and E).

93-225
Floor area regulations in Subdistrict F

In Subdistrict F, the maximum #floor area ratio# for #residential#, #community facility# and #commercial uses# on a #zoning lot# shall be as follows:

(a) the maximum #floor area ratio# for #residential uses# shall be 8.0;

* * *

93-231
Definitions

For the purposes of this Chapter, matter in italics is defined in Sections 12-10 or 23-911 (General definitions), inclusive.

93-232
Floor area increase in Subdistricts B, C, D and E, and Preservation Area P2

Within Subdistricts B, C, D and E, and Preservation Area P2, ~~The~~ the provisions of Section 23-952 (Floor area compensation in Inclusionary Housing designated areas) shall not apply. In lieu thereof, the #floor area# compensation provisions of this Section shall apply. In accordance with the provisions set forth in Section 93-22 (Floor Area Regulations in Subdistricts B, C, D, E and F) or 121-31 (Maximum Permitted Floor Area), the maximum permitted #residential floor area ratio# ~~for~~ on a #zoning lot# with #developments# or #enlargements# that provide #affordable housing# pursuant to the Inclusionary Housing Program may be increased, as follows:

* * *

93-30

SPECIAL FLOOR AREA REGULATIONS

93-31
District Improvement Fund Bonus

In Area P-2 of the #Special Garment Center District# and in the #Special Hudson Yards District# except in Subdistrict F, the Chairperson of the City Planning Commission shall allow, by certification, the applicable basic maximum #floor area ratio# to be increased up to the maximum amount specified in Sections 93-21, 93-22 or 121-31, as applicable, provided that instruments in a form acceptable to the City are executed and recorded and that, thereafter, a contribution has been deposited in the #Hudson Yards District Improvement Fund#. The execution and recording of such instruments and the payment of such non-refundable contribution shall be a precondition to the filing for or issuing of any building permit allowing more than the basic maximum #floor area# for such #development# or #enlargement#.

* * *

For the #conversion# to #dwelling units# of non-#residential ~~buildings~~ floor area#, ~~or portions thereof,~~ where the total #floor area# on the #zoning lot# to be #converted# to #residential use# exceeds a #floor area ratio# of 12.0, such excess #floor area# shall be permitted only pursuant to the provisions of this Section.

93-32
Floor Area Regulations in the Phase 2 Hudson Boulevard and Park

In the #Phase 2 Hudson Boulevard and Park#, no ~~new~~ #development# shall be permitted and, except as provided in Section 93-051 (Applicability of Chapter 1 of Article I), no ~~existing #development#~~ #building# shall be #enlarged#. However, #floor area# from a granting site within the #Phase 2 Hudson Boulevard and Park# may be transferred to a receiving site in accordance with the provisions of paragraph (a) of this Section.

For the purposes of this Section, a “granting site” shall mean a #zoning lot#, or portion thereof, within the #Phase 2 Hudson Boulevard and Park# and the #lot area# of such granting site shall include any area on such site designated on the City Map as Hudson Boulevard or #public park#, and a “receiving site” shall mean a #zoning lot#, or portion thereof, within Subareas A2 through A5 of the Large-Scale Plan Subdistrict A or Subareas D1 or D2 of Hell’s Kitchen Subdistrict D, to which #floor area# from a granting site has been transferred.

Special regulations for certain #zoning lots# partially within the #Phase 2 Hudson Boulevard and Park# are set forth in Section 93-33.

* * *

(b) Authorization for contribution-in-kind

* * *

An application filed with the Chairperson of the Commission for the transfer of #floor area# pursuant to this Section shall be made jointly by the owners of the granting site and receiving site and shall include a site plan and #floor area# zoning calculations for the granting site and the receiving site, and a copy of the transfer instrument legally sufficient in both form and content to effect such a transfer, together with notice of the restrictions upon further ~~#development#~~ development of the granting site and the receiving site.

* * *

93-33
Special Regulations for Residual Portions of Zoning Lots Partially Within the Phase 2 Hudson Boulevard and Park

Where all of the #lot area# within the following parcels, as they existed on January 19, 2005, that is also within the #Phase 2 Hudson Boulevard and Park#, has been conveyed to the City pursuant to the provisions of Section 93-32, the owner of the residual portion of one of these parcels may convey to the City such residual portion, with all ~~#development#~~ development rights appurtenant thereto, provided that all certificates of occupancy have been surrendered and all structures on such parcel have been demolished:

Block 708, Lots 20 and 46

Block 709, Lot 17

Block 710, Lot 20.

* * *

Where certification is made pursuant to this Section, the site plan and #floor area# calculations for the receiving site, together with the notice of restrictions upon further ~~#development#~~ development of the receiving site, included in the application submitted pursuant to Section 93-32, shall set forth the increase in #floor area# for such receiving site certified hereunder.

93-34
Distribution of Floor Area in the Large-Scale Plan Subdistrict A

In order to promote a superior site plan in the Eastern Rail Yards Subarea A1 of the Large-Scale Plan Subdistrict A, the Chairperson of the City Planning Commission shall allow, by certification, the distribution of #floor area# from the Eastern Rail Yards Subarea A1 to #zoning lots# in Subareas A2 through A5 of the Large-Scale Plan Subdistrict A. Such distribution shall only be permitted for receiving sites that have maximized their permitted #floor area# through contributions to the #Hudson Yards District Improvement Fund#, pursuant to Section 93-31, or the transfer of #floor area# or increase in the amount of #floor area# from the #Phase 2 Hudson Boulevard and Park#, pursuant to Sections 93-32 or 93-33. For the purposes of this Section, a "receiving site" shall mean a #zoning lot# within Subareas A2 through A5 to which #floor area# from the Eastern Rail Yards Subarea A1 has been distributed.

* * *

(b) Requirements for application

An application filed with the Chairperson of the Commission for the distribution of #floor area# by certification pursuant to paragraph (a) of this Section shall be made jointly by the owner of the ~~#development#~~ development rights of the Eastern Rail Yards Subarea A1 and the receiving site and shall include:

* * *

93-40
HEIGHT AND SETBACK REGULATIONS

In the #Special Hudson Yards District#, height and setback regulations shall be as set forth in this Section, inclusive.

* * *

93-42
Height and Setback in Subdistricts A, B, C, D, E and F

In Subareas D4 and D5 of the Hell's Kitchen Subdistrict D, the underlying height and setback regulations shall apply as set forth in Section 93-542, as modified by Section 93-41 (Rooftop Regulations).

* * *

(b) Required setbacks

For #buildings ~~or other structures~~# that contain only #residential use# above the applicable maximum base height, the required minimum setback for portions of such #buildings# that exceed such maximum base height shall be 10 feet from a #wide street# and 15 feet from a #narrow street#.

For #buildings or other structures# that do not contain #residential ~~#commercial# or #community facility~~ use# above the applicable maximum base height, the required minimum setback for portions of #buildings or other structures# that exceed such maximum base height shall be 15 feet from a #wide street# and 20 feet from a #narrow street#.

* * *

93-50
SPECIAL HEIGHT AND SETBACK REGULATIONS

In Subdistricts A, B and C, and Subareas D1, D2 and D3 of the Hell's Kitchen Subdistrict D, and Subdistrict E, the height and setback regulations set forth in paragraphs (a) through (d) of Section 93-42 (Height and Setback in Subdistricts A, B, C, D, E and F) shall apply, except that such regulations are modified in certain locations as set forth in this Section. Such modifications include the establishment of #street wall# location regulations, minimum and maximum base heights, depths of required setbacks, maximum length of building walls for towers, and tower #lot coverage#. Special provisions for recesses and sidewalk widenings are as follows:

* * *

93-51
Special Height and Setback Regulations in the Large-Scale Plan Subdistrict A

93-511
Tower lot coverage

The tower #lot coverage# requirements of paragraph (c) of Section 93-42 shall not apply ~~to any #development# or #enlargement#~~ within the Large-Scale Plan Subdistrict A.

93-512
Subareas A3, A4 and A5 of the Large-Scale Plan Subdistrict A

(a) Hudson Boulevard

For the purposes of this paragraph, (a), Hudson Boulevard shall be considered to be a #wide street#. The #street wall# of ~~the #development# or #enlargement#~~ #buildings# shall be located on the Hudson Boulevard sidewalk widening line and extend along at least 70 percent of the length of the Hudson Boulevard frontage of the #zoning lot#, and shall rise without setback to a minimum base height of 90 feet and a maximum base height of 120 feet. On #corner lots#, the maximum base height may apply along intersecting #narrow street lines# for a distance of 100 feet from its intersection with Hudson Boulevard. Above a height of 120 feet, a setback at least 25 feet in depth is required from the Hudson Boulevard #street line#, and setbacks from intersecting #narrow streets# shall comply with the provisions of paragraph (b) of Section 93-42 (Height and Setback in Subdistricts A, B, C, D, E and F).

* * *

(b) Tenth Avenue

The #street wall# of ~~the #development# or #enlargement#~~ #buildings# shall be located within 10 feet of the Tenth Avenue #street line# and extend along at least 70 percent of the Tenth Avenue frontage of the #zoning lot#, and shall rise without setback to a

minimum base height of 90 feet and a maximum base height of 150 feet. On #corner lots#, the maximum base height may apply along intersecting #narrow street lines# for a distance of 100 feet from its intersection with Tenth Avenue. Above a height of 150 feet, the setback provisions of paragraph (b) of Section 93-42 shall apply.

* * *

(c) Midblocks

For all #zoning lots# with frontage along the northerly #street lines# of West 35th through West 40th Streets, the #street wall# of any ~~#development# or #enlargement#~~ #building# shall be located on and extend along at least 50 percent of the length of the sidewalk widening line of the #zoning lot# and shall rise without setback to a minimum base height of 60 feet and a maximum base height of 120 feet. Above a height of 120 feet, the setback provisions of paragraph (b) of Section 93-42 shall apply. Alternatively, the #street wall# of a #building# may rise without setback at the sidewalk widening line provided the aggregate width of such #street wall# does not exceed 100 feet or 50 percent of the width of such northerly #street line# frontage of the #zoning lot#, whichever is less, and provided all other portions of the #building# that exceed a height of 120 feet comply with the setback provisions of Section 93-42. The provisions of this paragraph shall not apply within 100 feet of Eleventh Avenue. However, any #zoning lot# partially within 100 feet of Eleventh Avenue may, as an alternative, apply the provisions of this paragraph, (c), to the entire West 35th, West 36th, West 37th, West 38th, West 39th or West 40th Street #street# frontage of the #zoning lot#.

For all #zoning lots# with frontage along the southerly #street lines# of West 36th through West 41st Streets, the #street wall# of any ~~#development# or #enlargement#~~ #building# shall not exceed a maximum base height of 120 feet. Above a height of 120 feet, the setback provisions of paragraph (b) of Section 93-42 shall apply.

(d) Rear setback

No #yard# requirements shall apply to any #commercial building# or #commercial# portion of a #building#. However, above a height of 120 feet, no portion of ~~any #development# or #enlargement#~~ such #building# shall be nearer to a #rear lot line# than 20 feet.

93-513
Four Corners Subarea A2

(a) Hudson Boulevard

The provisions of paragraph (a) of Section 93-512 (Subareas A3, A4 and A5 of the Large-Scale Plan Subdistrict A) shall apply, except that the maximum base height shall be 150 feet.

(b) West 34th Street

The #street wall# of any ~~#development# or #enlargement#~~ #building# shall be located on the West 34th Street sidewalk widening line and extend along at least 70 percent of the West 34th Street frontage of the #zoning lot#, and shall rise without setback to a minimum base height of 90 feet and a maximum base height of 150 feet. For portions of #buildings# exceeding a height of 150 feet, a setback of 20 feet from the #street line# of West 34th Street shall be required. However, a #street wall# may rise without setback along the sidewalk widening line provided the aggregate width of such #street wall# does not exceed 50 percent of the width of the West 34th Street frontage of the #zoning lot# and provided all other portions of the #building# that exceed a height of 150 feet are set back at least 20 feet from the #street line# of West 34th Street.

* * *

93-514
Eastern Rail Yards Subarea A1

(a) Location of buildings

#Buildings# shall be located only in the following areas:

(1) east of the southerly prolongation of the eastern sidewalk widening line of Hudson Boulevard East;

(2) west of the southerly prolongation of the western sidewalk widening line of Hudson Boulevard West and within 220 feet of West 33rd Street; and

(3) west of the southerly prolongation of the eastern sidewalk widening line of Hudson Boulevard East and within 220 feet of West 30th Street, provided that either:

(i) ~~#development# in~~ such area contains only #uses# in Use Groups 3 and 4; or

(ii) where ~~#development# in~~ such area includes #residential use#:

(a) such #residential use# is permitted only in a #building# located west of the southerly prolongation of the western sidewalk widening line of Hudson Boulevard West, and such #building# may also include #uses# in Use Groups 3, 4, 6A and 6C; and

(b) a #building# containing only #uses# in Use Groups 3 or 4 may be located not closer than 50 feet east of such prolongation.

* * *

93-52
Special Height and Setback Regulations in the Farley Corridor Subdistrict B

The tower #lot coverage# requirements of paragraph (c) of Section 93-42 shall not apply ~~to any #development# or #enlargement#~~ within the Farley Corridor Subdistrict B.

93-521
450 West 33rd Street

The provisions of this Section shall apply ~~to any #development# or #enlargement# on the #zoning lot#~~ within an area bounded by Tenth Ave, West 31st Street, the Lincoln Tunnel Approach and West 33rd Street.

No #building# shall exceed a height of 150 feet within 10 feet of West 33rd Street, 15 feet of Tenth Avenue and 20 feet of West 31st Street, except as provided below:

(a) along West 31st Street, a #building# may rise without setback provided no part of such #building# is within 15 feet of West 31st Street; and

(b) along West 33rd Street, a #building# may rise without setback, provided that the #aggregate width of street walls# above a height of 150 feet and within 10 feet of the West 33rd Street #street line# does not exceed 50 percent of the length of the West 33rd Street frontage of the #zoning lot#.

However, if more than 75 percent of the total #floor area# existing on the #zoning lot# on January 19, 2005, is demolished, the reconstructed ~~#development# or #enlargement#~~ #buildings# shall not exceed a height of 150 feet within 15 feet of a #wide street line# and 20 feet of a #narrow street line#.

93-522
Ninth Avenue rail yard

The provisions of this Section shall apply~~, where applicable, to any #development# or #enlargement#~~ within the area bounded by Ninth Ave, West 31st Street, the Lincoln Tunnel Approach and West 33rd Street.

No #building or other structure# shall exceed a height of 150 feet within 15 feet of a #wide street line# and 20 feet of a #narrow street line#. However, on a #narrow street#, a #building# may rise without setback provided no part of such #building# is within 15 feet of the #narrow street line#.

93-523
Pennsylvania Station Subarea B4

Along Eighth Avenue, #street walls# shall be provided as follows:

* * *

(c) No #street walls# shall be located further than 10 feet from the Eighth Avenue #street line# unless they front upon a public plaza provided pursuant to paragraph (c) of Section 93-74. Along West 31st and West 33rd Streets, any portion of a ~~#development# or #enlargement#~~ #street wall# that exceeds a height of 150 feet shall be set back at least 15 feet from the West 31st and West 33rd Street #street lines#, as applicable. As an alternative, if the entire #building# is set back at least 10 feet from the West 31st or West 33rd Street #street line#, such #building# may rise without setback along such #street#.

93-53
Special Height and Setback Regulations in the 34th Street Corridor Subdistrict C

(a) 34th Street

For #zoning lots# with frontage on 34th Street, the #street wall# of ~~any #development# or #enlargement#~~ a #building# shall be located on and extend along the entire West 34th Street #street line#, except that to allow for corner articulation, the #street wall# may be located anywhere within an area bounded by intersecting #street lines# and lines 15 feet from and parallel to such #street lines#. Such #street walls# shall rise without setback to a minimum base height of 120 feet and a maximum base height of 150 feet. For #corner lots#, these provisions shall also apply along any intersecting #street line# for a minimum distance of 50 feet and a maximum distance of 100 feet from its intersection with West 34th Street. Above a height of 150 feet, the setback provisions of paragraph (b) of Section 93-42 shall apply.

(b) Tenth Avenue

For #zoning lots# with frontage on Tenth Avenue, the provisions of paragraph (a) of Section 93-541 shall apply.

(c) Midblocks between Eighth Avenue and Ninth Avenue

For #zoning lots# with frontage on West 33rd Street or West 35th Street beyond 100 feet of Eighth Avenue and Ninth Avenue, the #street wall# of any ~~#development# or #enlargement#~~ #building# shall be located on and extend along the entire West 33rd Street or West 35th Street frontage of the #zoning lot# not occupied by existing #buildings# to remain. Such #street wall# shall rise without setback to a minimum base height of 80 feet and a maximum base height of 90 feet. However, if the height of an adjacent #street wall# fronting on the same #street line# is higher than 90 feet before setback, the #street wall# of the new or #enlarged building# may rise without setback to the height of such adjacent #street wall#, up to a maximum height of 120 feet. Above a height of 90 feet or the height of the adjacent #street wall# if higher than 90 feet, the

setback provisions of paragraph (b) of Section 93-42 shall apply. The #street wall# of any ~~#development# or #enlargement#~~ #building# may rise to a height less than 80 feet ~~provided that no #building# on the #zoning lot# exceeds such height~~ except where such #building# is located on a #zoning lot# with multiple #buildings#, one or more of which is #developed, enlarged# or altered after (date of amendment) to a height exceeding 80 feet.

93-54
Special Height and Setback Regulations in Hell's Kitchen Subdistrict D

93-541
Height and setback in Subareas D1 and D2

(a) Tenth Avenue

(1) For #zoning lots# that do not occupy the entire Tenth Avenue #block# front, and for #zoning lots# that occupy the entire Tenth Avenue #block# front where existing ~~#residential~~ buildings# containing #residences# will remain, the #street wall# of any #development# or #enlargement# shall be located on and extend along the entire Tenth Avenue #street line#, except that to allow for corner articulation, the #street wall# may be located anywhere within an area bounded by intersecting #street lines# and lines 15 feet from and parallel to such lines. Such #street wall# shall rise without setback to a minimum base height of 90 feet and a maximum base height of 150 feet, except that such minimum base height requirement shall not apply to any existing ~~#residential~~ buildings# containing #residences# to remain. Where such #zoning lots# also front upon a #narrow street#, these provisions shall apply along such #narrow street# frontage for a minimum distance of 50 feet and a maximum distance of 100 feet from the intersection of Tenth Avenue. Above a height of 150 feet, the setback provisions of paragraph (b) of Section 93-42 shall apply.

(2) For #zoning lots# that occupy the entire Tenth Avenue #block# front, and where no existing #buildings# fronting upon Tenth Avenue will remain, the #street wall# ~~of the #development# or #enlargement#~~ shall be located within 10 feet of the Tenth Avenue #street line# and extend along the entire Tenth Avenue frontage of the #zoning lot# and shall rise without setback to a minimum base height of 90 feet and a maximum base height of 150 feet. These provisions shall apply for a minimum distance of 50 feet and a maximum distance of 100 feet from the intersection of Tenth Avenue.

* * *

93-542
Height and setback in Subareas D4 and D5

In Subareas D4 and D5 of Hell's Kitchen Subdistrict D, the underlying height and setback regulations shall apply, except that:

(a) the rooftop regulations set forth in Section 93-41 shall apply ~~to all #developments# or #enlargements#~~;

(b) within the C2-5 District of Subarea D4, #commercial uses# shall be limited to two #stories# or a height of 30 feet, whichever is less; and

(c) within the C1-7A District of Subarea D5, recesses in the #street wall# of any #building# facing Ninth Avenue shall not be permitted within 20 feet of an adjacent #building# or within 30 feet of the intersection of two #street lines#, except as provided for permitted corner articulation.

93-543
Authorization for the provision of public open areas

For ~~#developments# or #enlargements# on~~ #zoning lots# that are wholly or partially within Hell's Kitchen Subdistrict D and provide publicly accessible open areas adjacent to or over the Lincoln Tunnel Approaches or Dyer Avenue, the City Planning Commission may authorize height and setback modifications within C2-5 Districts mapped within R8A Districts and the distribution of #floor area# without regard to district boundaries, provided the Commission finds that:

* * *

93-55
Special Height and Setback Regulations in the South of Port Authority Subdistrict E

(a) Zoning lots with Eighth Avenue frontage

For #zoning lots# with frontage on Eighth Avenue, the #street wall# of a ~~#development# or #enlargement#~~ #building# shall be located on the Eighth Avenue sidewalk widening line and, where applicable, on the West 39th Street and West 40th Street #street lines#, and extend along the entire #street# frontage of the #zoning lot#. Such #street walls# shall rise without setback to a minimum height of 90 feet and a maximum height of 120 feet. The #street wall# of any ~~#development# or #enlargement#~~ #building# may rise to a height less than 90 ~~feet provided that no #building# on the #zoning lot# exceeds such height~~ except where such #building# is located on a #zoning lot# with multiple #buildings#, one or more of which is #developed, enlarged# or altered after (date of amendment) to a height exceeding 90 feet.

Above a height of 120 feet, no portion of ~~the #development# or #enlargement#~~ a #building or other structure# shall penetrate a #sky exposure plane# that begins at a height of 120 feet above the Eighth Avenue sidewalk widening line and #street lines# of West 39th Street and West 40th Street, as applicable, and rises over the #zoning lot# at a slope of four feet of vertical distance for each foot of horizontal distance, except as provided below:

(1) any portion of the #building or other structure developed# or #enlarged# pursuant to the tower regulations of Sections 33-45 or 35-63, as applicable, may penetrate the #sky exposure plane#;

(2) permitted obstructions, as listed in paragraph (a) of Section 93-41, may penetrate the #sky exposure plane#. In addition, a dormer, as listed in paragraph (c) of Section 23-62, may penetrate the #sky exposure plane#.

(b) Zoning lots without Eighth Avenue frontage

For #zoning lots# without frontage on Eighth Avenue, the #street wall# of a ~~#development# or #enlargement#~~ #building# shall be located on the #street line# and extend along the entire #street# frontage of the #zoning lot# not occupied by existing #buildings# to remain. Such #street walls# shall rise without setback to a minimum base height of 80 feet and a maximum base height of 90 feet. However, if the height of an adjacent #street wall# fronting on the same #street line# is higher than 90 feet before setback, the #street wall# of the new or #enlarged building# may rise without setback to the height of such adjacent #street wall#, up to a maximum height of 120 feet. Above a height of 90 feet or the height of the adjacent #street wall# if higher than 90 feet, the setback provisions of paragraph (b) of Section 93-42 shall apply. The #street wall# of any ~~#development# or #enlargement#~~ #building# may rise to a height less than 80 feet ~~provided that no #building# on the #zoning lot# exceeds such height~~ except where such #building# is located on a #zoning lot# with multiple #buildings#, one or more of which is #developed, enlarged# or altered after (date of amendment) to a height exceeding 80 feet.

93-56
Special Height and Setback Regulations in Subdistrict F

The height and setback regulations set forth in this Section, inclusive, shall apply to specific development sites identified as Sites 1 through 6 on Map 7 (Subdistrict F Site Plan) in Appendix A. All ~~#developments# or #enlargements# of a~~ #buildings or other structures developed# or #enlarged# within Subdistrict F, with the exception of those approved as part of a public access area pursuant to Section 93-78 (Site and Landscape Plans for Public Access Areas in Subdistrict F), shall occur within these designated site locations. However, portions of a #building# located entirely below grade, and exempt from the definition of #floor area#, shall be permitted to extend beyond such designated site locations. Furthermore, the boundary of Site 6 may be extended in a westerly direction, by up to 40 feet, to accommodate a public #school# in accordance with the provisions of paragraph (b) of Section 93-568 (Site 6).

* * *

For the purposes of applying height and setback regulations, the term "#buildings#" shall include #buildings or other structures#.

93-561
General rules for Subdistrict F

The following regulations shall apply to all #buildings ~~or other structures~~# within Sites 1 through 6:

* * *

93-562
Street wall regulations for certain streets

The locations of all #street walls# identified in this Section are shown on Map 10 (Subdistrict F Mandatory Street Wall Requirements) in Appendix A.

* * *

(b) #Street wall# location

All #street walls# ~~of #developments# or #enlargements#~~ identified in paragraph (a) of this Section shall be located on the #street line#.

* * *

93-563
Site 1

In addition to the applicable requirements set forth in Section 93-562 (Street wall regulations for certain streets), the provisions of this Section shall apply to #buildings# on Site 1.

(a) Building base

(1) Facing West 33rd Street

The #street wall# of the ~~#development# or #enlargement#~~ #building# facing West 33rd Street may rise without setback to a maximum base height of 120 feet before a setback is required. However, no setbacks shall be required within 150 feet of Twelfth Avenue.

(2) Facing the West 32nd Street Extension

The provisions of this paragraph, (a)(2), shall apply to #street walls# facing the West 32nd Street Extension, the Western Open Space and the Midblock Connection within 60 feet of the West 32nd Street Extension. Such #street walls# shall rise without setback to a minimum base height of 60 feet and a maximum base height of 90 feet.

(3) Facing the Western Open Space

The provisions of this paragraph, (a)(3), shall apply to #street walls# facing the Western Open Space beyond 60 feet of its intersection with the West 32nd Street Extension. The #street wall# of the ~~#development# or #enlargement#~~ #building# may rise without setback to a maximum base height of 90 feet before a setback is required. However, no setbacks shall be required within 150 feet of Twelfth Avenue.

* * *

(c) Towers

All #stories# of a ~~#development# or #enlargement#~~ #building# located partially or wholly above the maximum transition height shall be considered a "tower" and shall comply with the provisions of this paragraph, (c).

* * *

93-564
Site 2

In addition to the applicable requirements set forth in Section 93-562 (Street wall regulations for certain streets), the provisions of this Section shall apply to #buildings# on Site 2.

* * *

(b) Towers

All #stories# of a ~~#development# or #enlargement#~~ #building# located partially or wholly above a height of 150 feet shall be considered a tower and shall comply with the provisions of this paragraph, (b). Not more than one tower shall be allowed on Site 2.

* * *

93-565
Site 3

The regulations of this Section shall apply to all #buildings# within Site 3.

All #stories# of a ~~#development# or #enlargement#~~ #building# located wholly or partially above the highest level of the adjoining public sidewalk or finished grade on Site 3 shall be considered a tower and shall comply with the provisions of this Section. Not more than one tower shall be permitted on Site 3.

* * *

93-566
Site 4

In addition to the applicable requirements set forth in Section 93-562 (Street wall regulations for certain streets), the provisions of this Section shall apply to #buildings# on Site 4.

* * *

(c) Towers

All #stories# of a ~~#development# or #enlargement#~~ #building# located partially or wholly above the maximum base height of 120 feet shall be considered a tower and shall comply with the provisions of this paragraph, (c). Not more than one tower shall be permitted on Site 4.

* * *

93-567
Site 5

All #stories# of a ~~#development# or #enlargement#~~ #building# located wholly or partially above finished grade on Site 5 shall be considered a tower and shall comply with the provisions of this Section.

On Site 5, a #building ~~or other structure~~# may be located adjacent to and above the #High Line#, provided no portion of such #building# or an associated structural column is located within five feet of the edge of the #High Line# from the level of finished grade to a level of 50 feet above the level of the #High Line bed#, as shown on Map 8 (Subdistrict F Public Access Area Plan) in Appendix A.

* * *

(b) Maximum length and height

At or below a height of 50 feet above the #High Line bed#, if a #building ~~or other structure~~# is ~~#developed# with~~ located so that it has portions on both sides of the #High Line#, the minimum horizontal dimension, measured in any direction between such portions shall be 60 feet.

* * *

93-568
Site 6

In addition to the applicable requirements set forth in Section 93-562 (Street wall regulations for certain streets), the provisions of this Section shall apply to #buildings# on Site 6.

(a) Height and setback regulations

* * *

(4) Towers

All #stories# of a ~~#development# or #enlargement#~~ #building# located partially or wholly above a height of 90 feet, or 150 feet if a transition height is provided in accordance with the provisions of paragraph (a)(3), shall be considered a tower and shall comply with the provisions of this paragraph, (a)(4).

* * *

93-57
Special Permit for Modification of Height and Setback Regulations

Within the #Special Hudson Yards District#, except within C1-7A Districts or C2-5 Districts mapped within R8A Districts, for #developments# or #enlargements# on #zoning lots# with at least 20,000 square feet of #lot area# or #developments# or #enlargements# on any size #zoning lot# that occupy the entire blockfront along a #wide street#, the City Planning Commission may modify the regulations set forth in Sections 93-40 (HEIGHT AND SETBACK REGULATIONS), inclusive, and 93-50 (SPECIAL HEIGHT AND SETBACK REGULATIONS), inclusive, provided the Commission finds that:

* * *

(d) such modifications will result in a #development# or #enlargement# that enhances the streetscape and ~~is~~ will be compatible with #development# in the surrounding area.

The Commission may prescribe additional conditions and safeguards to minimize adverse effects of the #development# or #enlargement# on the character of the surrounding area.

93-60
MANDATORY IMPROVEMENTS

* * *

93-63
Pedestrian Circulation Space

In C2-8 and C6-4 Districts, all ~~new~~ #developments# or #enlargements# on #zoning lots# of 5,000 square feet or larger with more than 70,000 square feet of new #floor area# shall provide pedestrian circulation space in accordance with the provisions of Section 37-50. In addition, for #developments# or #enlargements# that provide subway entranceways constructed after December 21, 2005, one and one-half times the area of such entranceway accessible to the public at #street# level may qualify as pedestrian circulation space, up to a maximum amount of 3,000 square feet.

* * *

93-64
Major Building Entrances

Any #development# or #enlargement# with a #commercial ~~#floor~~ floor area ratio# of 5.0 or greater and located on a #zoning lot# with frontage upon Hudson Boulevard shall provide a major entranceway to the commercial portion of the #building# on Hudson Boulevard.

Any ~~#residential~~ development# or #enlargement# containing #residences# located on #zoning lots# with frontage upon Tenth Avenue north of West 33rd Street shall provide a major entrance to the #residential# portion of the #building# on or within 100 feet of Tenth Avenue.

The #street wall# of any #building# facing east towards Ninth Avenue south of West 33rd Street shall contain either a major building entrance or have at least 70 percent of its ground floor frontage occupied by retail #uses#.

* * *

93-70
PUBLIC ACCESS REQUIREMENTS FOR SPECIAL SITES

Public access shall be provided for special sites as specified in this Section, inclusive. In the event of a conflict between the provisions of this Section, inclusive, and any underlying regulation, the provisions of this Section shall govern.

* * *

The Chairperson shall allow for the phased ~~#development#~~ development of public access areas upon certification to the Commissioner of Buildings that a plan has been submitted that provides for the completion of any public access area that is integral to the #development# of a #building# or #buildings# within each phase. Where the public use and enjoyment of a public access area is contingent upon #development# on an adjacent #zoning lot# that has not yet occurred, the Chairperson may allow for the future ~~#development#~~ development of such public access area at the time that the adjacent #zoning lot# is #developed#.

No temporary certificate of occupancy from the Department of Buildings may be issued for any portion of any #development# or #enlargement# with a #floor area ratio# of 10.0 or more until the Chairperson certifies to the Department of Buildings that the public access area is substantially complete, and the public access area is open to and useable by the public. No

permanent certificate of occupancy from the Department of Buildings may be issued for any portion of such #development# or #enlargement# with a #floor area ratio# of 10.0 or more until the Chairperson certifies to the Department of Buildings that the public access area is complete and that all public access requirements of this Section have been met in accordance with the plans for such public access areas. Notwithstanding the foregoing, for #zoning lots# with multiple #buildings# for which the Chairperson has certified that a plan has been submitted that provides for the phased ~~#development#~~ development of public access areas through completion of any public access area that is integral to the #development# of a #building# or #buildings# within each phase, such certifications shall be made with respect to substantial completion or completion of the public access areas integral to each such phase.

93-71
Public Access Areas in the Eastern Rail Yards Subarea A1

Any #development# in the Eastern Rail Yards Subarea A1 shall provide public access areas in accordance with the following requirements:

* * *

(c) Public plaza

A publicly accessible space, (hereinafter referred to as a "public plaza"), shall be provided at the intersection of Tenth Avenue and West 30th Street. Such public plaza shall have a minimum area of 12,000 square feet with a minimum frontage of 200 feet along Tenth Avenue and a minimum frontage of 60 feet along West 30th Street, and be ~~#developed# to~~ provided in accordance with the standards ~~of a~~ for #public plazas# set forth in Section 37-70 (PUBLIC PLAZAS). Such public plaza shall be open to the sky except that such space may be covered by the existing or reconstructed High Line structure.

* * *

93-73
Public Access Areas on Ninth Avenue Rail Yard

The provisions of this Section shall apply to any #development# or #enlargement# on #zoning lots# in the area bounded by Ninth Avenue, West 31st Street, the western boundary of the Lincoln Tunnel Approach and West 33rd Street. For such ~~#developments#~~ #zoning lots# with a #floor area ratio# greater than 2.0, ~~or #enlargements# that result in a total #floor area ratio# greater than 2.0,~~ the following easements shall be required:

* * *

93-731
Special requirements for zoning lots with floor area ratios greater than 10

The provisions of this Section shall apply to any #development# or #enlargement# on #zoning lots# in the area bounded by Ninth Avenue, West 31st Street, the western boundary of the Lincoln Tunnel Approach and West 33rd Street. Where the #floor area ratio# for any such ~~#development# or #enlargement#~~ #zoning lot# exceeds 10.0, paragraphs (a) through (d) of this Section shall apply:

(a) Covered pedestrian space

A publicly accessible covered pedestrian space shall be provided within 10 feet of the prolonged center line of West 32nd Street. Such pedestrian space shall be structurally designed to accommodate and connect the Lincoln Tunnel Approach bridge required pursuant to paragraph (b) of Section 93-72 with Ninth Avenue. Such covered pedestrian space shall:

* * *

Notwithstanding the provisions of this paragraph, (a), up to 40 percent of the area ~~required to be #developed# as~~ of a covered pedestrian space required pursuant to this paragraph, (a), may be open, provided such open area fronts upon Ninth Avenue and is directly accessible to the plaza required pursuant to paragraph (c) of this Section. Such open area shall be ~~#developed#~~ provided in accordance with the standards ~~of a~~ for #public plazas# set forth in Section 37-70, inclusive.

In the event that such covered pedestrian space is not provided pursuant to this paragraph, (a), concurrently with a #development# or #enlargement# north of such covered pedestrian space, both shall be designed to allow for compliance with the provisions of this Section upon completion.

(b) Through block connection

A publicly accessible through block connection, open to the sky, shall be provided along the eastern edge of the Lincoln Tunnel Approach. Such connection shall have a minimum width of 20 feet and provide a direct connection with the covered pedestrian space required pursuant to paragraph (a) of this Section.

(c) Plaza

A publicly accessible plaza, open to the sky, shall be provided at the intersection of Ninth Avenue and West 33rd Street. Such plaza shall have a minimum area of 11,280 square feet with a minimum frontage of 60 feet along West 33rd Street, and provide a direct connection to the covered pedestrian space or open area required pursuant to paragraph (a) of this Section. Such plaza shall be ~~#developed#~~ provided in accordance with ~~to~~ the standards ~~of a~~ for #public plazas# set forth in Section 37-70, inclusive.

(d) Connection to below-grade passage

Where a pedestrian passage extending from the Eighth Avenue Subway beneath West 33rd Street to the west side of Ninth Avenue has been constructed, an entrance within the #development# or #enlargement# shall be constructed that connects with such passage.

No #rear yard# regulations shall apply to any #building developed# or #enlarged# pursuant to this Section. Furthermore, the provisions of this Section may be waived or modified in conjunction with the granting of a special permit pursuant to Section 74-41 for the #development# of an arena in the area bounded by Ninth Avenue, West 31st Street, the Lincoln Tunnel Approach and West 33rd Street.

93-74
Public Access Areas in Pennsylvania Station Subarea B4

The provisions of this Section shall apply to any #development# in the Pennsylvania Station Subarea B4 of the Farley Corridor Subdistrict B.

* * *

(c) Plaza

A publicly-accessible plaza, open to the sky, may be provided at the intersection of Eighth Avenue and West 31st Street. Such plaza shall have a minimum area of 12,000 square feet with a minimum frontage of 60 feet along West 31st Street, and be ~~#developed# to~~ provided in accordance with the standards ~~of a~~ for #public plazas# set forth in Section 37-70, inclusive.

(d) Corner circulation space

Corner circulation spaces shall be provided at the corners of Eighth Avenue and West 31st Street and Eighth Avenue and West 33rd Street. Such spaces shall comply with the requirements for corner circulation spaces of paragraph (d) of Section 37-53. Such spaces

shall count towards meeting the pedestrian circulation space requirements of Section 93-63. However, no corner circulation space shall be required at the corner of Eighth Avenue and West 31st Street if ~~such corner is #developed# with~~ a plaza is provided at such corner in accordance with paragraph (c) of this Section.

* * *

93-754
General requirements for the Northeast Plaza

A publicly accessible open space, (henceforth referred to as the "Northeast Plaza"), shall be provided at the intersection of West 33rd Street and Eleventh Avenue, as shown on Map 8 (Subdistrict F Public Access Area Plan) in Appendix A. The area of such space shall be at least 2,600 square feet, and shall have a minimum #street# frontage of 40 feet along each #street#. The Northeast Plaza shall be ~~#developed#~~ provided in accordance with the standards ~~of a~~ for #public plazas#, as set forth in Section 37-70 (PUBLIC PLAZAS), exclusive of the area dimensions set forth in Section 37-712.

* * *

93-756
General requirements for the High Line

For the portion of the #High Line# that is located within the boundary of Subdistrict F, the following provisions shall apply.

* * *

(d) Certification to modify requirements adjacent to the #High Line#

The Chairperson of the City Planning Commission may modify certain regulations on adjacent ~~#development#~~ development sites 1 through 6, provided that the Chairperson certifies to the Commissioner of Buildings that such a change is necessary in order to provide access to the #High Line# open space or to accommodate facilities for the #High Line# open space, and that such change is compatible with the character of ~~#developed#~~ developed portions of the #High Line# south of West 30th Street.

The following regulations may be modified:

(1) The ground floor level requirements set forth in Section 93-14 (Ground Floor Level Requirements), where applicable;

(2) The unobstructed five foot separation between the #High Line# and a #street wall# on Sites 1, 5 and 6 required pursuant to paragraph (a) of Section 93-561 (General rules for Subdistrict F) in order to accommodate a pedestrian access way, open to the sky, between the #High Line# and such ~~#building#~~ development sites. However, the required five foot #street wall# separation from the edge of the #High Line# shall not be modified;

* * *

93-761
General requirements for the West 32nd Street Extension

A private street, (henceforth referred to as the "West 32nd Street Extension"), shall be provided south of and parallel to West 33rd Street.

(a) General purpose

The West 32nd Street Extension is intended to serve the following purposes:

(1) to serve as the primary publicly accessible pedestrian and vehicular connection to the Western Rail Yard from Eleventh Avenue;

(2) to provide an experience substantially similar to active public #streets# in other high-density, #mixed-use districts#;

* * *

(c) Core elements

The West 32nd Street Extension shall provide the following core elements:

* * *

(2) Planting and seating requirements for the southern sidewalk and the Allee

Two trees shall be planted for every 20 feet of southern curb length of the West 32nd Street Extension between Eleventh Avenue and the Connector. Fractions equal to or greater than one-half resulting from this calculation shall be considered to be one tree. Such trees shall be planted at approximately equal intervals along the entire curb length of the West 32nd Street Extension.

Along the southern sidewalk, trees shall be planted within five feet of the curb and the southern edge of the sidewalk. One row of trees shall be planted within five feet of the curb and a second row of trees shall be planted within five feet of the southern edge of the sidewalk. This double row of tree planting along the southern sidewalk of the West 32nd Street Extension between Eleventh Avenue and the Connector shall henceforth be referred to as the Allee, as shown on Map 8. No ~~#development#~~ #building or other structure# shall be permitted within 15 feet of the southern edge of the Allee.

The Allee shall provide a minimum of one linear foot of seating for every 75 square feet of the Allee. A minimum of 50 percent of the required seating shall provide seatbacks.

* * *

93-762
General requirements for the West 31st Street Extension

A private street, (henceforth referred to as the "West 31st Street Extension"), shall be provided north of and parallel to West 30th Street.

(a) General purpose

The West 31st Street Extension is intended to serve the following purposes:

(1) to serve as a publicly accessible pedestrian and vehicular connection to the Western Rail Yard from Eleventh Avenue;

(2) to provide an experience substantially similar to active public #streets# in other high-density, #mixed-use districts#; and

(3) to provide a private street with core elements that are substantially similar to the surrounding public #streets#.

* * *

93-77
Design Criteria for Public Access Areas in Subdistrict F

Public access areas in Subdistrict F shall be comprised of publicly accessible open spaces, private streets and pedestrian ways.

(a) Design criteria

Where private streets, pedestrian ways and publicly accessible open spaces, with the exception of the #High Line#, provide elements listed in this Section 93-77 (Design Criteria for Public Access Areas in Subdistrict F), such elements shall comply with the applicable minimum design standards set forth below as a minimum design standard.

* * *

(14) Public restrooms

At least one public restroom shall be provided to serve either the Central Open Space or the Western Open Space, whichever is ~~#developed#~~ developed first pursuant to the provisions of Section 93-78. Such public restroom shall provide separate restroom spaces for each gender, and may be located in either the publicly accessible open space or within the ground floor of any adjacent #building#.

(b) Maintenance

The owner of each of Sites 1 through 6 in Subdistrict F shall be responsible for the maintenance of all publicly accessible open spaces, private streets and pedestrian ways, including, but not limited to, litter control, management of pigeons and rodents, maintenance of required lighting levels, and the care and replacement of furnishings and vegetation within the portion of the Subdistrict associated with such Site in the phased ~~#development#~~ development provided in the site and landscape plans required pursuant to Section 93-78. Notwithstanding the foregoing, maintenance of the #High Line# shall be governed by such agreements as are entered into with respect thereto.

(c) Interim #use#

Open #uses# listed in Use Group 4B, with the exception of cemeteries and golf courses, shall be permitted as interim #uses# within the designated boundary of any public access area described in Sections 93-75 or 93-76 (Publicly Accessible Private Streets and Pedestrian Ways in Subdistrict F) with the exception of the #High Line# open space, or within the designated boundary of any ~~#building#~~ development site described in Section 93-56 (Special Height and Setback Regulations for Subdistrict F). Such interim #uses# may be #developed# prior to the approval of the site and landscape plans for the public access area in which it is located, and may continue until such time as ~~#development#~~ development commences on such public access area pursuant to the approved site and landscape plans. Any such interim #uses# shall be open to and usable by the public, and may include temporary structures, provided that all associated #floor area# is appurtenant to the interim #use#.

93-78
Site and Landscape Plans for Public Access Areas in Subdistrict F

Public access areas in Subdistrict F shall be comprised of publicly accessible open spaces, private streets and pedestrian ways.

All publicly accessible open spaces, or portions thereof, listed in Section 93-75 (Publicly Accessible Open Spaces in Subdistrict F), and private streets and pedestrian ways, or portions thereof, listed in Section 93-76 (Publicly Accessible Private Streets and Pedestrian Ways in Subdistrict F), shall comply with the following provisions:

(a) No building permit shall be issued for any #development# or #enlargement# within Subdistrict F unless the Chairperson of the City Planning Commission has certified to the Commissioner of Buildings that the site and landscape plans for the Subdistrict F public access area have been approved by the Chairperson pursuant to the provisions of this Section. Notwithstanding the foregoing, the Chairperson shall allow for the phased ~~#development#~~ development of public access areas, or portions thereof, upon certification to the Commissioner of Buildings that site and landscape plans have been

submitted that provide for the completion of public access areas in association with the #development# or #enlargement# of a #building# or #buildings# within each phase.

* * *

(c) The Chairperson of the City Planning Commission shall approve the site and landscape plans within 45 days following filing, provided that the following provisions are met:

* * *

(5) the level of public amenity provided in the landscape plan is equal to or better than the level of public amenity ~~provided~~ required in #public plazas# ~~developed#~~ that are provided in accordance with ~~under~~ the standards of Section 37-70 or, in the case of the #High Line#, than the level of public amenity provided on developed portions of the #High Line# south of West 30th Street. All public amenities that are provided in the landscape plan shall take into account the nature and character of the Subdistrict F public access areas; and

* * *

(e) Where a phase of ~~#development#~~ development results in all ~~building~~ development sites in Subdistrict F, as shown on Map 7 (Subdistrict F Site Plan) in Appendix A, having been #developed# in whole or in part pursuant to the provisions of Section 93-56 (Special Height and Setback Regulations in Subdistrict F), the Department of Buildings shall not issue a certificate of occupancy for the last #building# of such phase unless and until the Chairperson certifies to the Commissioner of Buildings that all public access areas within Subdistrict F are substantially complete, and are open to and useable by the public. However, in the event that the site and landscape plans for the #High Line# open space have not been approved pursuant to paragraph (c) of this Section at the time such last #building# is eligible for a certificate of occupancy, the Department of Buildings shall issue such certificate of occupancy upon certification of the Chairperson that all public access areas other than the #High Line# open space are substantially complete.

* * *

93-782
Certification to temporarily modify public access areas for construction staging

In the event that the applicant demonstrates to the satisfaction of the Chairperson of the City Planning Commission that a public access area will be required for construction staging or similar activities in a future phase of #development# or #enlargement#, the application for the site and landscape plans may be accompanied by a request for approval of a temporary public access area plan for the public access area which may include fewer than all core elements required as part of a phase of #development# or #enlargement# of such public access area pursuant to paragraph (c)(2) of Section 93-78 (Site and Landscape Plans for Public Access Areas in Subdistrict F), as necessary to accommodate such future construction staging or similar activities. Such temporary public access area plan shall be subject to review and approval in the same manner as the site and landscape plans pursuant to Section 93-78 and, if approved pursuant thereto, shall be implemented and remain in effect only for the period necessary to accommodate the need for use of the public access area for construction staging or similar activities in a future phase of development ~~#development# or #enlargement#~~. Following the expiration of such period, the site and landscape plans, including all core elements for such public access area, shall be implemented.

* * *

93-821
Permitted parking when the reservoir surplus is greater than or equal to zero

When the #reservoir surplus# is greater than or equal to zero, off-street parking spaces may be provided only in accordance with the provisions of this Section.

* * *

(e) The Department of Buildings shall not issue a building permit for any #accessory# off-street parking pursuant to paragraphs (a) through (c) of this Section unless the Chairperson has certified that:

* * *

(4) Any certification granted by the Chairperson, pursuant to this Section, shall lapse after two years if #substantial construction# of the ~~new #building#~~ #development# or of the #enlarged# portion of an existing #building#, which includes the subject #accessory# off-street parking spaces, has not occurred. In making a certification pursuant to this Section, the Chairperson shall not consider any prior certification or any special permit that has lapsed in accordance with the provisions of this Resolution.

* * *

93-83
Use and Location of Parking Facilities

The provisions of this Section shall apply to all off-street parking spaces within the #Special Hudson Yards District#.

(a) All off-street parking spaces #accessory# to #residences# shall be used exclusively by the occupants of such #residences#. Except in the Eastern Rail Yard Subarea A1, all off-street parking spaces #accessory# to Use Group 5 #transient hotels# and Use Group 6B offices may be made available for public use. The provisions of Section 13-141 (Location of accessory off-street parking spaces), inclusive, shall apply.

(b) All off-street parking spaces shall be located within facilities that, except for entrances and exits, are:

(1) entirely below the level of any #street# or publicly accessible open area upon which such facility, or portion thereof, fronts; or

(2) located, at every level above-grade, behind #commercial#, #community facility# or #residential floor area# so that no portion of such parking facility is visible from adjoining #streets# or publicly accessible open areas.

93-831
Authorization for above-grade parking

* * *

(d) the ground floor level of such parking facilities that front upon #streets# is occupied by #commercial#, #community facility# or #residential uses# that activate all such adjoining #streets#, except at the entrances and exits to the parking facility. Where site planning constraints make such #uses# infeasible, the parking facility shall be screened from adjoining #streets# or public access areas with a densely planted buffer strip at least 10 feet deep. Where such screening is not desirable, such ground floor wall of the parking facility shall be articulated in a manner that provides visual interest;

(e) any floor space above the ground floor level utilized for parking is located, to the greatest extent feasible, behind #commercial#, #community facility# or #residential floor area# so as to minimize the visibility of the parking facility from adjoining #streets# or public access areas. Any exterior wall of the parking facility visible from an adjoining #street# or public access area shall be articulated in a manner that is compatible with #buildings# in the surrounding area;

* * *

93-90
HARASSMENT

(a) Definitions

* * *

(13) Material alteration

"Material alteration" shall mean any alteration to a #multiple dwelling# or other #building#, including, but not limited to, an alteration which reduces or increases the #floor area# of the #multiple dwelling# or other #building#, #converts #floor area# from residential to non-residential use, changes the number or layout of #dwelling units# or #rooming units#, or adds or removes kitchens or bathrooms; provided, however, that #material alteration# shall not include:

(i) an #incidental alteration# which does not change the layout of #dwelling units# or #rooming units#, or

(ii) a repair or replacement of existing elements of such #multiple dwelling# or other #building# without materially modifying such elements.

* * *

Article IX - Special Purpose Districts
Chapter 4
Special Sheepshead Bay District

94-00
GENERAL PURPOSES

* * *

94-01
Definitions

Development

For the purposes of this Chapter, a "development" includes ~~the construction of a new #building or other structure# on a #zoning lot# or #lots#, the relocation of an existing #building# on another #zoning lot#, the #use# of a tract of land for a new #use#~~ #development# as defined in Section 12-10, or an #enlargement#.

* * *

~~Special Sheepshead Bay District~~
~~(repeated from Section 12-10)~~

~~The "Special Sheepshead Bay District" is a Special Purpose District designated by the letters "SB," in which special regulations set forth in Article IX, Chapter 4, apply. The #Special Sheepshead Bay District# appears on the #zoning maps# superimposed on other districts, and its regulations supplement or modify those of the districts on which it is superimposed.~~

* * *

94-061
Uses permitted by right

(a) #Residential# and #community facility uses#

#Uses# listed in Use Groups 1, 2, 3 and 4 shall be allowed anywhere within the Special District, except as set forth in Section 94-065 (Restriction on ground floor use).

(b) #Commercial uses#

In areas A, B, C, D and E, as indicated in Appendix A (District Map), ~~no~~ #commercial uses# ~~other than those #uses# permitted~~ shall be limited to those listed in Use Group SB ~~shall be allowed~~ and those listed in Section 62-211 (Water-Dependent (WD) uses) from use groups 6, 7, 9 and 14, except for #uses# permitted under Section 94-063 (Uses permitted by special permit).

In Area F, only #commercial uses# permitted by Use Group 6 and those listed in Section 62-211 (Water-Dependent (WD) uses) from use groups 6, 7, 9 and 14 shall be allowed within the underlying #Commercial District# boundaries.

In Area G, only #commercial uses# permitted by Use Groups 6, 7, 8 and 9 and those listed in Section 62-211 (Water-Dependent (WD) uses) from use groups 6, 7, 9 and 14 shall be allowed within the underlying #Commercial District# boundaries.

In Area H, except for #uses# permitted under Section 94-063, ~~no~~ #commercial uses# shall be limited to those listed in Section 62-211 (Water-Dependent (WD) uses) from use groups 6, 7, 9 and 14 and the following #uses# ~~permitted other than~~:

* * *

Eating or drinking places, including those which provide outdoor table service or incidental musical entertainment ~~either by mechanical device or by not more than three #persons# playing piano, organ, accordion, guitar or any string instrument~~

* * *

94-062
Use Group SB

In Areas A, B, C, D and E, except as stated in this Section, all #commercial uses# permitted by Use Group SB shall be limited to a maximum #floor area# of 3,500 square feet per establishment and to a maximum frontage per establishment at ground floor level of 35 feet when facing any plaza, Emmons Avenue, Sheepshead Bay Road, Ocean Avenue and Bedford Avenue. Any #use# marked with a single asterisk (*) shall not be located on the ground floor of a #building#.

A. Convenience retail or service establishments

Bakeries, limited to 750 square feet of #floor area# for production

Eating or drinking places, with no restriction on #floor area# or frontage per establishment, including those which provide outdoor table service or incidental musical entertainment~~, either by mechanical device or by not more than three #persons# playing piano, organ, accordion, guitar or any string instrument~~

* * *

94-063
Uses permitted by special permit

The City Planning Commission, by special permit, may allow the #uses# listed in Tables 1 and 2 in Areas A, B, C, D and E and the #uses# listed in Table 2 only in Area H, provided that the following findings are made:

(a) the #use# is so located as not to impair the character of the surrounding area or its future ~~#development#~~ development or cause any environmental hazards;

(b) the principal vehicular access for such #use# is not located on Emmons Avenue, Sheepshead Bay Road, Ocean Avenue or Bedford Avenue, except where no access is available from another street, and that such #use# will not cause undue congestion in local #streets#;

(c) the #uses# listed under #manufacturing# establishments in Table 1 are #accessory# to the retail sales on the same #zoning lot# and such #uses# occupy not more than 50 percent of the #floor area# of the establishment and that such #uses# do not create objectionable noise, vibration, smoke, dust or odor; and

* * *

94-064
Supplementary use regulations

The provisions of Article VII, Chapter 3 (Special Permits by the Board of Standards and Appeals), Sections 73-10 through 73-52, shall not apply ~~to any #development# or portion thereof~~ in the Special District, except that Section 73-36 (Physical Culture or Health Establishments) shall be applicable.

* * *

94-071
Sidewalk extension area

All ~~existing or new~~ #developments# ~~within the Special District,~~ which ~~is~~ are located on a #zoning lot# with frontage along Emmons Avenue, Sheepshead Bay Road, Ocean Avenue, Bedford Avenue or Nostrand Avenue~~, except for existing #buildings# within five feet of the #street line# along such #street# frontages,~~ shall contain a sidewalk extension area, which complies with the following requirements:

(a) has a minimum depth of five feet, measured perpendicular to such #street lines#;

(b) extends the full length of the #zoning lot# along such #street lines#, except for existing #buildings# within five feet of the #street line#;

* * *

94-08
Special Floor Area Bonus Provisions

In Areas A, C, D, E and F, any ~~new~~ #development# on a #zoning lot# with an area of at least 20,000 square feet within the Special District shall be eligible for a #floor area# bonus as set forth in this Section.

In areas A and E, for any ~~new~~ #development#, the #floor area# bonus earned under the provisions of this Section may be used either for #residential use# on the same #zoning lot# or may be transferred to a #receiving lot# within the Special District pursuant to Section 94-093 (Transfer of development rights from granting lots).

In Area C, for any ~~new~~ #development#, the #floor area# bonus earned under the provisions of this Section may be used either for #commercial use# on the same #zoning lot# or may be transferred to a #receiving lot# within the Special District pursuant to Section 94-093.

In Area D, for any ~~new~~ #development#, the #floor area# bonus earned under the provisions of this Section may be used only for the purposes of transfer to a #receiving lot# within the Special District pursuant to Section 94-093.

In Area F, for any ~~new~~ #development#, the #floor area# bonus earned under the provisions of this Section may be used only for #residential use# on the same #zoning lot#.

In no event shall the aggregate bonus #floor area# permitted under the provisions of this Section exceed the basic #floor area ratio# permitted for #residential use# by Section 94-09 (Special Bulk Regulations) by more than 60 percent in Areas A, C, D or E, or by more than 20 percent in Area F.

Any #floor area# bonus received according to the provisions of this Section shall require certification by the City Planning Commission pursuant to Section 94-13.

* * *

94-083
Special parking bonus

In Areas C, D or E, any #development# on a #zoning lot# with a minimum area of 20,000 square feet shall be eligible for a #floor area# bonus at the rate of one square foot of #floor area# for every square foot of ~~#accessory#~~ #accessory commercial# parking space above the minimum amount required by the underlying district regulations and made available for daily long-term parking.

To be eligible for a #floor area# bonus under the provisions of this Section, there shall be at least five additional parking spaces provided and the size of each parking space shall be at least 300 square feet. In no event shall the dimension of any parking stall be less than 18 feet long and eight feet, six inches wide.

* * *

94-09
Special Bulk Regulations

94-091
Basic floor area ratio

For the purposes of this Chapter, the #floor area ratio# of a ~~#development#~~ #zoning lot# within the Special District shall not exceed the #floor area ratio# permitted by the underlying district regulations, except as set forth in Section 94-092 (Maximum floor area ratio).

94-092
Maximum floor area ratio

~~For any #development# within the Special District, the~~ The permitted basic #floor area ratio# for #residential# or #community facility ~~#development#~~ use# is 1.25 and for #commercial ~~#development#~~ use# is 1.00. The permitted basic #floor area ratio# may be increased on any #zoning lot# by the amount set forth in Section 94-08 (Special Floor Area Bonus Provisions) or through transfer provisions pursuant to Section 94-094 (Authorization provisions for transfer of development rights to receiving lots).

In Areas A, E and F, the maximum #floor area ratio# for any #residential# or #community facility ~~#development#~~ use# on a #zoning lot# shall in no event be more than 2.00 and for #commercial ~~#development#~~ use# be no more than 1.00.

In Area C, the maximum #floor area ratio# for any #residential# or #community facility ~~#development#~~ use# on a #zoning lot# shall in no event be no more than 1.25 and for #commercial ~~#development#~~ use# be more than 1.50. The maximum #floor area# in a #mixed building# within the Special District shall be the maximum #floor area# permitted for either the #residential# portion, the #community facility# portion, or the #commercial# portion of such a #building#, whichever permits the greatest amount of #floor area#.

* * *

94-094
Authorization provisions for transfer of development rights to receiving lots

The City Planning Commission, on application after public notice and hearing, may authorize the addition of all or any portion of the #development rights# from a #granting lot# to the permitted #floor area# of a #receiving lot# provided that:

(a) the maximum #floor area# for any #development# on a #receiving lot# does not exceed the maximum #floor area# permitted by Section 94-092 (Maximum floor area ratio);

(b) the #development# shall aid in achieving the general purposes and intent of this Chapter as set forth in Section 94-00 (General Purposes);

(c) the design of the #development# shall not impair the character of the surrounding area or its future #development#;

(d) the distribution of the #bulk# ~~of the total #development#~~ on the #receiving lot# permits adequate access of light and air to surrounding #streets# and properties;

(e) the traffic created by the #development# will not create or contribute to serious traffic congestion and will make adequate provisions for unconstrained pedestrian circulation; and

(f) the requirements set forth in Sections 94-093 (Transfer of development rights from granting lots), 94-12 (Recordation) and 94-13 (Certification) are satisfied.

The City Planning Commission may prescribe appropriate conditions and safeguards to minimize adverse effects on the character of the surrounding area.

* * *

94-10
SPECIAL REQUIREMENTS FOR BUILDING HEIGHT AND SETBACKS

The height and setback regulations set forth in Sections 23-631 (Height and Setback in R1, R2, R3, R4 and R5 Districts), 34-25 (Modification of Height and Setback Regulations) and 35-61 (Height and Setback Regulations), shall not apply to #buildings# in the #Special Sheepshead Bay District#. In lieu thereof, height and setback regulations set forth in this Section shall apply. For #buildings# in #Residence Districts#, #building# height is measured from the #base plane#. For #buildings# in #Commercial Districts#, #building# height is measured from #curb level#.

~~In Areas G and H, a #building# shall not exceed 3 #stories# or 35 feet, whichever is less.~~

~~However, the City Planning Commission, by a special permit after public notice and hearing and subject to Board of Estimate action, may permit within Areas G or H modifications of the height restrictions set forth in this Section for new #buildings#.~~

~~As a condition for such modification, the Commission shall find that:~~

~~(a) the distribution of the #bulk# of the #development# permits adequate access of light and air to surrounding #streets# and properties, and does not impair the view of the Bay; and~~

~~(b) the height of such #building# does not exceed 5 #stories# or 50 feet, whichever is less.~~

~~The Commission may prescribe appropriate conditions and safeguards to protect the view of the Bay and to minimize the adverse effects on the character of the surrounding areas.~~

In Areas A, B, C, D, E and F, the #street wall# or any other portion of a #residential building# or the #residential# portion of a #mixed building#, except for a structure which encloses only #accessory# parking fronting on the Leif Ericson Drive service road #street line#, shall be set back a minimum distance of 10 feet from all #street lines#. Beyond the #initial setback distance#, the #building# shall not exceed the maximum height as set forth in this Section.

In Area A, the maximum height of a #street wall# or other portion of a #building# within 25 feet of the Emmons Avenue or 15 feet of the Sheepshead Bay Road #street lines# shall not exceed 2 #stories# or 30 feet, whichever is less. Beyond the #initial setback distances# in Area A, the #building# shall not exceed 7 #stories# or 85 feet, whichever is less.

In Area C, the maximum height of a #street wall# or other portion of a #building# within 25 feet of the Emmons Avenue or Ocean Avenue #street lines# shall not exceed 2 #stories# or 30 feet, whichever is less. Beyond the #initial setback distance# of 25 feet in Area C, the #building# shall not exceed 4 #stories# or 50 feet, whichever is less.

In Areas B and D, a #building# shall not exceed 4 #stories# or 50 feet, whichever is less.

In Areas E and F, within 75 feet of the Emmons Avenue #street line#, the maximum height of any portion of a #building# shall not be more than 3 #stories# or 35 feet, whichever is less. Beyond the #initial setback distance# of 75 feet in Areas E and F, the #building# shall not exceed 6 #stories# or 75 feet, whichever is less.

<u>In Areas G and H, a #building# shall not exceed 3 #stories# or 35 feet, whichever is less. However, the City Planning Commission may, by special permit, modify such height restrictions, provided that:</u>

<u>(a) the distribution of #bulk# permits adequate access of light and air to surrounding #streets# and properties, and does not impair the view of the Bay; and</u>

(b) the height of such #building# does not exceed 5 #stories# or 50 feet, whichever is less.

The Commission may prescribe appropriate conditions and safeguards to protect the view of the Bay and to minimize the adverse effects on the character of the surrounding areas.

94-11
Special Parking Provisions

94-111
Curb cuts ~~of a new development~~

No curb cuts shall be permitted on Emmons Avenue, Sheepshead Bay Road, Ocean Avenue, Bedford Avenue or Nostrand Avenue except that, where no access is available on a #zoning lot# from another #street#, one curb cut shall be permitted.

* * *

94-114
Exception to application of waiver provisions

In areas A, B, C, D, E and F, ~~for any #development#,~~ the provisions of Section 36-23 (Waiver of Requirements for Spaces below Minimum Number) do not apply.

* * *

Article IX - Special Purpose Districts
Chapter 5
Special Transit Land Use District

95-00
GENERAL PURPOSES

* * *

~~**95-01**~~
~~**Definition**~~

~~Special Transit Land Use District~~
~~(repeated from 12-10)~~

~~A "Special Transit Land Use District" is a Special Purpose District designated by the letters "TA" in which special regulations set forth in Article IX, Chapter 5, apply to all #developments#.~~

~~The #Special Transit Land Use District# and its regulations supplement or supersede those of the districts on which it is superimposed.~~

~~#Special Transit Land Use Districts# may be mapped in the vicinity of existing or proposed subway stations to provide easements to facilitate pedestrian access and/or improve access of light and air to subway mezzanines or stations.~~

95-02
General Provisions

#Special Transit Land Use Districts# are mapped in the vicinity of existing or proposed subway stations. Except as modified by the express provisions of this Chapter, the regulations of the underlying district remain in effect.

Whenever this Special District overlaps another Special District and imposes contradictory regulations, the provisions of the #Special Transit Land Use District# shall apply. Nothing contained in this regulation shall be understood to supersede Landmark or Historic District designations of the New York City Landmarks Preservation Commission.

95-03
Transit Easement

Any ~~new~~ #development# or #enlargement# involving ground level construction within the #Special Transit Land Use District# shall provide an easement on the #zoning lot# for subway-related use and public access to the subway mezzanine or station when required pursuant to the provisions of Section 95-04.

The issuance by the Department of Buildings of an excavation permit for any #zoning lot# located within the Special District shall be dependent upon prior compliance with the provisions of this Chapter.

The transit easement required on a #zoning lot# shall permit the realization of one or more of the following planning objectives:

(a) the integration and relating of subway station design to surrounding development;

(b) the introduction of light and air to stations and mezzanines;

(c) the reduction of conflict between pedestrian movements and station facilities on the #street# level;

(d) the provision of weather protection for subway entrances;

(e) the relation of subway entrances to #commercial# and other transit facilities;

* * *

95-031
Selection of transit easement

The transit easement required on a #zoning lot# shall constitute a volume whose dimensions above and below #curb level# shall comply with the requirements as set forth in Table A or Table B, depending on the depth of the proposed subway mezzanine below #curb level#, as established by the ~~New York City Transit~~ Metropolitan Transportation Authority.

Six possible types of transit easements are listed in Table A and in Table B. The applicant for a #development# or an #enlargement# involving ground level construction ~~of a #zoning lot#~~ shall, in consultation with the ~~Transit~~ Metropolitan Transportation Authority and City Planning Commission, select the easement type that is most appropriate for the location.

TABLE A
MINIMUM DIMENSIONS FOR TRANSIT EASEMENT VOLUME
(in feet)

Stations: Houston St., Kips Bay, Lenox Hill and E. 96th St.

Easement Type	Height above #Curb Level#(h)	Depth below #Curb Level#* (D)	Length (L)	Width(W)	#Zoning Lots# less than 10,000 sf	#Zoning Lots# 10,000 sf or more
1	15	20	80	20	x	
2	15	30	80	20	x	x
3	15	30	85	32		x
4	15	25	80	10	x	
5	15	30	80	10	x	
6	15	25	60	20	x	

* See Section 95-054, paragraph (5).

TABLE B
MINIMUM DIMENSIONS FOR TRANSIT EASEMENT VOLUME
(in feet)

Stations: Chatham Square, Grand St., 14th St., 23rd St., UN Plaza, East Midtown, Yorkville, Franklin Plaza, and Triboro Plaza

Height above #Curb Level#	Depth below #Curb	#Zoning Lots# less than	#Zoning Lots# 10,000 sf

Easement Type	(h)	Level#* (D)	Length (L)	Width(W)	10,000 sf	or more
1	15	20	80	20	x	
2	15	40	100	20	x	x
3	15	40	85	32		x
4	15	35	100	10	x	
5	15	40	100	10	x	
6	15	35	65	20	x	

Type 1 is appropriate on #zoning lots# of less than 10,000 square feet with adequate lot frontage and where the ~~Transit~~ Metropolitan Transportation Authority provides final access to the subway mezzanine level under a public right-of-way.

* * *

The ~~Transit~~ Metropolitan Transportation Authority and the Commission, in consultation with the applicant, may make minor modifications of the dimensions of the easement volume type required on the applicant's site and the spacing of building columns permitted within the easement volume to facilitate the design and construction of circulation facilities appropriate for the area.

* * *

95-04
Certification of Transit Easement Volume

95-041
For developments or enlargements

Prior to filing any applications with the Department of Buildings for an excavation permit or building permit for a #development# or #enlargement# ~~on a #zoning lot#~~ within the #Special Transit Land Use District#, the owner of the #zoning lot# shall file an application with the ~~New York City Transit~~ Metropolitan Transportation Authority and the City Planning Commission requesting a certification as to whether or not a transit easement volume is required on the #zoning lot#.

Upon receipt of the completed application, the Commission shall furnish a copy to the affected Community Board.

Within 60 days after receipt of such application, the ~~Transit~~ Metropolitan Transportation Authority and the Commission shall jointly certify whether or not an easement is required on the #zoning lot#. Failure to certify within the 60-day period will release the owner from any obligation to provide a transit easement volume on such #zoning lot#.

When the ~~Transit~~ Metropolitan Transportation Authority and the Commission indicate that such easement is required, the owner shall submit a site plan indicating the location and type of easement volume that would be most compatible with the proposed #development# or #enlargement# ~~on the #zoning lot#~~ for joint approval and final certification by the ~~Transit~~ Metropolitan Transportation Authority and the Commission. Copies of such certification shall be forwarded by the City Planning Commission to the Department of Buildings.

Use Group T #uses# shall not be permitted in #Residence Districts# prior to the improvement of

a transit easement in accordance with approval and certified plans.

95-042
For substantially vacant existing zoning lots

When a #zoning lot# located within the #Special Transit Land Use District# is substantially vacant and appropriate for a transit easement, the ~~New York City Transit~~ Metropolitan Transportation Authority may request the City Planning Commission to certify that a portion of such #zoning lot# is necessary for a transit easement.

As a condition for securing a transit easement on such #zoning lot#, the Commission shall make the following findings:

(a) that such transit easement is required by the ~~Transit~~ Metropolitan Transportation Authority to provide public access to a subway mezzanine or to a public passage way leading to a subway mezzanine or platform;

(b) that such transit easement is located on a vacant portion of a #zoning lot#;

(c) that the use of the transit easement will not reduce development potential on the #zoning lot# under the applicable district regulations; and

(d) that the ~~Transit~~ Metropolitan Transportation Authority and the owner agree that the construction within the easement volume will be integrated with the total ~~#development#~~ development.

At such time as an existing vacant #zoning lot# on which a transit easement volume is provided pursuant to the provisions of this Section is #developed#, it shall be subject to all regulations of this Chapter.

* * *

95-051
Development of transit access facilities

All access facilities, including any light wells or sky lights required within a transit easement volume, shall be constructed and maintained by the ~~Transit~~ Metropolitan Transportation Authority except for any building columns, footings or any other permitted obstructions allowed therein.

* * *

95-052
Special access facilities for persons with disabilities

Special elevators for persons with disabilities may locate within a transit easement volume, provided stair and/or escalator access to the subway mezzanine are located within the same easement and in no event located within the public sidewalk adjacent to the #zoning lot#.

Such special elevators shall be designed by the ~~New York City Transit~~ Metropolitan Transportation Authority in consultation with the owner of the #zoning lot# and shall be integrated architecturally, including color and material, with the ~~#development#~~ #buildings# on the #zoning lot# and with adjoining #public plaza# area. Design concept for such elevators shall be submitted to the City Planning Commission for certification.

95-053
Weather protection

The stairs or escalators providing pedestrian access to the subway mezzanine, which are not

covered at the entrance level, shall be weather protected by the #building# or portion thereof including an overhang, or by a roofed area provided by the owner of the #zoning lot# in accordance with the ~~New York City Transit~~ Metropolitan Transportation Authority requirements. Such overhang or roofed area shall cover either or both the stairway and the escalator which are uncovered at the ground level. Any overhang or roofed area shall be sufficient to cover the access facilities within the easement volume and may not otherwise obstruct the #public plaza#.

When the subway entrance is within an open #public plaza# area, a roof area shall be provided with either a glazed or translucent material for at least 50 percent of its surface area. The roofed area shall be no more than 15 feet above #curb level# and shall blend harmoniously with the ~~development~~ #buildings# on the #zoning lot# and any ~~surrounding~~ adjoining #public plaza# or open area.

95-054
Permitted uses and other constructions

Areas within the easement volume not used for circulation purposes may be developed only with newsstands, ~~cigar stands,~~ flower stands or similar stands, in accordance with the ~~New York City Transit~~ Metropolitan Transportation Authority specifications, provided they do not interfere with pedestrian circulation and are made of removable structures. In no event shall such permitted #uses# be located within 10 feet of a pedestrian entrance to the subway at #curb level#.

In addition, any portion of the transit easement volume at #curb level# not to be covered for weather protection, may contain trees, benches or any obstructions permitted in a #public plaza# area. However, such elements shall not interfere with the pedestrian movement.

The ~~Transit~~ Metropolitan Transportation Authority and the City Planning Commission may permit penetration of the transit easement volume above #curb level# by a building lobby, including building columns, where such lobby space serves as a part of the pedestrian circulation system and provides from it direct public access to the subway entrance within the easement volume.

Where construction within a transit easement volume is more than five feet in height above #curb level#, such construction proposal shall be submitted to the Commission for a review and certification to insure that such construction relates harmoniously to the total ~~#development#~~ development. When a transit easement volume is located within a #building#, it shall be open to the general public for the same hours of operation as the subway station.

Building columns or footings are permitted inside the transit easement volume, provided that the minimum clear distance between any columns is 12 feet and between the columns and any bounding walls of the transit easement volume is 10 feet. Where the width of an easement is greater than 20 feet, location of columns within the easement volume shall be established in consultation with the ~~Transit~~ Metropolitan Transportation Authority. In all cases, the depth of columns or footings within the easement area or adjoining area shall be established in consultation with the ~~Transit~~ Metropolitan Transportation Authority. Furthermore, vertical space between such columns shall be open and unobstructed from its base except for any construction permitted under the provisions of this Chapter.

95-055
Knockout panel

Any underground walls constructed along the #front lot line# of a #zoning lot# in which transit easement volume is required by the ~~Transit~~ Metropolitan Transportation Authority shall contain a knockout panel, not less than 12 feet wide, below #curb level# down to the bottom of the easement. The actual location and size of such knockout panel shall be indicated by the ~~New York City Transit~~ Metropolitan Transportation Authority.

95-06

Temporary Use of the Easement Area

Any easement volume required on a #zoning lot# pursuant to the provisions of this Chapter may be temporarily used by the owner of the #zoning lot# for any permitted #uses# until such time as required by the ~~Transit~~ Metropolitan Transportation Authority or by its designee for subway purposes.

Temporary #use# of the transit easement volume above #curb level# in a #public plaza# or #open space# area shall be limited to #use# as a landscaped open area that may contain obstructions permitted in a #public plaza#. Improvements or construction of a temporary nature within the easement volume for such temporary #uses# shall be removed by the owner of the #zoning lot# prior to the time at which public #use# of the easement area is required. A minimum notice of six months in writing shall be given by the ~~Transit~~ Metropolitan Transportation Authority to the owner of the #zoning lot# in order to vacate the tenants of such temporary #uses#.

95-07
Special Provisions for an Increase in Zoning Tower Coverage on Zoning Lots Containing Transit Easements

For any #zoning lot# on which a transit easement volume is required pursuant to Section 95-04, the #lot coverage# of a ~~zoning~~ tower permitted by the underlying district regulations may be increased by an amount equal to 10 percent of the #lot area# of the #zoning lot#.

In no event shall the permitted increase in ~~zoning~~ tower coverage on a #zoning lot# affect the maximum allowable #floor area ratio# under the applicable district regulations.

95-08
Special Use Regulations

In order to promote the continued development of retail and related #uses# which are most appropriate for pedestrians using transit facilities, the only #commercial uses# permitted in the subway mezzanine level, along with the bounding walls of the transit easement volume and at the ground #story# of any #development# or #enlargement# within the Special District, shall be those #uses# listed in Use Group T in Section 95-081.

* * *

95-09
Special Regulations for Accessory Off-Street Parking and Curb Cuts

On any #zoning lot# on which a transit easement volume is provided, the required #accessory# off-street parking requirements for #residential uses# of the applicable underlying districts shall be reduced to a maximum of 20 percent.

In no case within the Special District shall curb cuts for vehicular access be located on a #street# containing transit lines or on a #street# within 50 feet of its intersection with the #street lines# of such a #street#.

The #accessory# parking requirements shall not apply to any #development# or #enlargement# for which the Commissioner of Buildings has certified that there is no way to provide the required parking spaces with access to a #street# in conformity with the provisions of this Section.

* * *

95-12
Termination of Transit Easement Volume

In the event that the ~~New York City Transit~~ Metropolitan Transportation Authority and the City

Planning Commission jointly notify the Department of Buildings and the owner in writing that a transit easement volume is not required on a #zoning lot# in its final construction plans, the restrictions imposed on such #zoning lot# by the provisions of this Chapter shall lapse, following receipt of notification thereof by the owner, and the owner shall have the right to record an instrument reciting the consent of the ~~Transit~~ Metropolitan Transportation Authority to the extinguishment of the easement volume. On any #zoning lot# which has been #developed# or upon which a #building# is #enlarged# in accordance with the provisions of Section 95-07 and on which termination of transit easement has been certified pursuant to this Section, any open, enclosed or arcaded area reserved for transit easement at #curb level# shall be ~~#developed#~~ provided for public use with lighting, landscaping, trees, substantial artwork and sitting facilities.

95-13
Previous Transit Easement Agreements

Whenever, under prior zoning regulations, the owner of a #development# or #enlargement# has agreed to provide a transit easement volume on a #zoning lot#, the existence of such agreement shall be certified by the Chairperson of the City Planning Commission to the Department of Buildings. Such agreement shall be deemed to satisfy the provisions of this Chapter.

Article IX - Special Purpose Districts
Chapter 6
Special Clinton District

96-00
GENERAL PURPOSES

* * *

96-01
Definitions

Definitions specially applicable to this Chapter are set forth in this Section. The definitions of other defined terms are as set forth in Section 12-10 (DEFINITIONS).

* * *

Material alteration

"Material alteration" shall mean any alteration to a #multiple dwelling# including, but not limited to, an alteration which reduces or increases the #floor area# of the #multiple dwelling#, #converts #floor area# from #residential# to non-#residential use#, changes the number or layout of #dwelling units# or #rooming units#, or adds or removes kitchens or bathrooms; provided, however, that #material alteration# shall not include:

(a) an #incidental alteration# which does not change the layout of #dwelling units# or #rooming units#; or

(b) a repair or replacement of existing elements of such #multiple dwelling# without materially modifying such elements.

For purposes of this definition, #dwelling unit# and #rooming unit# shall be defined as in Section 96-110.

Mixed building

For the purposes of this Chapter, a "mixed building" is a #building# in a #Commercial District# used partly for #residential use# and partly for #community facility# or #commercial use#, or a #building# in a #~~Residential~~ Residence District# used partly for #residential use# and partly for #community facility use#.

Multiple dwelling

"Multiple dwelling" shall have the meaning set forth in the Multiple Dwelling Law.

~~Special Clinton District~~
~~(repeated from Section 12-10)~~

~~The "Special Clinton District" is a Special Purpose District designated by the letters "CL" in which special regulations set forth in Article IX, Chapter 6 apply.~~

~~The #Special Clinton District# and its regulations supplement or supersede those of the districts on which it is superimposed.~~

~~Special Midtown District~~

~~The "Special Midtown District" is a Special Purpose District designated by the letters "MiD" in~~

~~which special regulations set forth in Article VIII, Chapter 1, apply.~~

* * *

96-10
PRESERVATION AREA

The provision of this Section shall apply to all #developments#, #enlargements#, #extensions# or alterations. All existing #buildings# within the Preservation Area shall be considered complying #buildings# for all purposes including, but not limited to, alterations, #enlargements#, #extensions# or #conversions# to #residential uses#. Any existing #building# which is damaged or destroyed by any means may be reconstructed to its #bulk# prior to such damage or destruction. All existing legal #uses# in enclosed #buildings# shall be considered conforming #uses#. Except as otherwise provided in this Chapter, any existing #commercial# or #manufacturing uses# may be changed, subject to the applicable underlying district regulations, pursuant to the change of #non-conforming use# provisions of Sections 52-31, 52-33, 52-34, 52-35 and 52-36.

96-101
Floor area regulations

For any ~~#development# or #enlargement#~~ #zoning lot# within the Preservation Area, the #floor area ratio# for a #residential#, #commercial# or #community facility building#, or portions of a #mixed building# containing such #uses#, shall not exceed the following:

#Uses#	#Floor Area Ratio#
#Residential buildings# or #community facility buildings# or portions of #mixed buildings# containing #residential# or #community facility uses# in the following Districts:	
R8 C1-5 C2-5 C6-2	4.2
#Commercial buildings# or #commercial# portion of #mixed buildings# in the following Districts:	
C1-5 C2-5	2.0
C6-2*	4.2

---

* In C6-2 Districts, for #zoning lots#, or portions thereof, comprised of listed theaters designated in Section 81-742 of the #Special Midtown District#, the City Planning Commission shall allow a transfer of development rights pursuant to Section 81-744 (Transfer of development rights from listed theaters). The basic maximum #floor area ratio# for transfer purposes for such #zoning lots#, or portions thereof, shall be 6.02.

The maximum #floor area# in a #mixed building# shall be the maximum #floor area# permitted for either the #commercial# portion of such #building# or the #community facility# portion of such #building# or the #residential# portion of such #building#, as set forth in this Section, whichever permits the greatest amount of #floor area#.

* * *

96-102
Lot coverage regulations

~~For any #development# or #enlargement# w~~ Within the Preservation Area, the #open space# requirement of Article II, Chapter 3, and the #lot coverage# provisions of Section 24-11, are not

applicable. The #lot coverage# provisions of this Section apply in lieu thereof ~~to any #development# or #enlargement#~~. In C6-2 Districts, for the purposes of determining #lot coverage#, any part of a #building# that is listed as a permitted obstruction in #open space# or in a #rear yard# shall not be included in #lot coverage#. For #zoning lots#, or portions thereof, located within 100 feet of the #street line# of a #wide street#, the maximum #lot coverage# shall not exceed 70 percent. For all #zoning lots#, or portions thereof, located more than 100 feet from the #street line# of a #wide street#, the maximum #lot coverage# shall not exceed 60 percent.

Any ~~new~~ #development# containing #residential uses# shall provide a minimum of 20 percent of the #lot area# of a #zoning lot# as usable, landscaped open area for the ~~#residential# tenants~~ occupants of #dwelling units# or #rooming units# in the #development#.

96-103
Yard regulations

* * *

On a #through lot#, or portion thereof, more than 100 feet from the #street line# of a #wide street#, the #rear yard equivalent# provision of Section 23-532 (Required rear yard equivalents), paragraph (a), shall apply.

96-104
Height regulations

The underlying height and setback regulations shall not apply, except as set forth in Sections 23-62 or 33-42 (Permitted Obstructions), as applicable. In lieu thereof, the height and setback provisions of this Section shall apply ~~to all #developments# and #enlargements#~~. All height shall be measured from #curb level#.

* * *

However, the City Planning Commission, by special permit, may modify the special height restrictions set forth in this Section for any #development# or #enlargement# ~~on such #zoning lots#~~. ~~As a condition for such modification,~~ In order to grant such special permit, the Commission shall find that the distribution of the #bulk# of the #development# or #enlargement# permits adequate access of light and air to surrounding #streets# and properties and that the maximum height of such #development# or #enlargement# does not exceed 99 feet beyond 100 feet of a #wide street#, and 115 feet within 100 feet of a #wide street#. The Commission may prescribe appropriate conditions and safeguards to protect and minimize any adverse effects on the character of the surrounding area.

96-105
Dwelling unit regulations

(a) #Dwelling unit# distribution

For #developments#, #enlargements#, #extensions# or #conversions# of an existing #building# to a #residential use#, the density requirements of the underlying districts shall be inapplicable. In lieu thereof, the required #lot area per dwelling unit# of a #development#, #enlargement#, #extension# or #conversion# of an existing #building# to a #residential use# shall not be less than 168 square feet and the number of two-bedroom units on a #zoning lot# shall not be less than 20 percent.

* * *

However, notwithstanding any provision to the contrary contained in this Section, the minimum density requirement and the 20 percent, two-bedroom unit requirement shall

not apply to alterations which add a code-complying bathroom, pursuant to ~~Article 31~~ Section 27-2063 of the Housing Maintenance Code of the City of New York, to a #dwelling unit# which is publicly assisted (exclusive of any tax abatement or tax exemption program), and which is administered by a not-for-profit agent.

The City Planning Commission, by special permit, may modify the two-bedroom unit distribution requirement and the density requirement of this Section for a #non-profit residence for the elderly# or for a #residence# substantially for the elderly handicapped, under jurisdiction of a State or City agency, provided that the following findings are made:

(1) that such #residences# are sponsored by a voluntary non-profit organization;

(2) that the location and size of such facility does not create an undue concentration of #dwelling units# of this type and #community facilities# with sleeping accommodations within the immediate area;

* * *

The Commission may prescribe appropriate conditions or safeguards to minimize the adverse effect of any #use# permitted under this Section on the ~~#residential#~~ residential character of the surrounding area.

(b) Special provisions for owner-occupied ~~#residential~~ buildings# containing #residences#

For alterations of ~~#residential~~ buildings# containing #residences#, which #buildings# are owner-occupied and which contain four or fewer #dwelling units#, the #dwelling unit# distribution provisions of Section 96-105 (Dwelling unit regulations) shall not apply.

96-107
Special regulations for community facility uses

#Developments#, #enlargements# or #extensions# of #community facility uses#, or #conversions# of an existing #building# to a #community facility use#, are permitted on #zoning lots# containing existing #buildings# with #residential uses# only pursuant to the provisions of this Section. The City Planning Commission, by special permit, may permit #developments#, #enlargements# or #extensions# of #community facility uses#, provided that the Commission makes the following findings:

* * *

(c) that the Department of Housing~~,~~ Preservation and Development has issued a #certification of no harassment# or that the owner has complied with Section 96-110, paragraph (d) (Certification of Cure for Harassment).

* * *

96-108
Demolition of buildings

No demolition permit or alteration permit for partial demolition involving a decrease of more than 20 percent in the amount of #residential floor area# in a #building# shall be issued by the Department of Buildings for any #building# containing #dwelling units# within the Preservation Area, unless it is an unsafe #building# and demolition is required pursuant to the provisions of Title 28, Chapter 2, Article 216 of the New York City Administrative Code.

However, the City Planning Commission, by a special permit, may allow demolition of #buildings# containing #dwelling units# or #rooming units# other than unsafe #buildings# within the Preservation Area, provided that the Commission makes the following findings:

* * *

(c) that the Department of Housing~~,~~ Preservation and Development has issued a #certification of no harassment# or that the owner has complied with Section 96-110, paragraph (d), (Certification of Cure for Harassment); and

(d) that an acceptable program for ~~new~~ #development# of the #zoning lot# is submitted to the Commission which indicates that to the extent permitted by the provisions of Section 96-10 (PRESERVATION AREA), the number of new #dwelling units# to be constructed is at least equal to the number of #dwelling units# to be demolished and that the #floor area# of the ~~new #residential~~ #development# containing #residences# is at least equal to the #floor area# of the #dwelling units# to be demolished, and that site development will commence within a period of twelve months from completion of relocation.

The Commission may prescribe appropriate conditions and safeguards to ~~insure~~ ensure that any interim #use~~s~~ # proposed on the site prior to any construction is in conformance with the purposes of this Special District.

* * *

96-110
Harassment and cure

(a) Definitions

* * *

(11) Restrictive declaration

"Restrictive declaration" shall mean a legal instrument which:

(i) provides that #low income housing# in an amount not less than the #cure requirement# shall be provided in a new or altered #multiple dwelling# on the #cure compliance lot#;

(ii) provides that the #low income housing# must comply with the requirements of Section 23-90 for rental #affordable housing# provided without #public funding#, as amended by this Chapter, unless any such requirement is waived by the Department of Housing Preservation and Development. However, in the Preservation Area, paragraph ~~(b) of Section 23-951 (On-site new construction option)~~ (c) of Section 23-96 (Requirements for Generating Sites) shall be inapplicable and in its place and stead, paragraph (a) of Section 96-105 (Dwelling unit regulations) shall be applicable;

* * *

96-20
PERIMETER AREA

#Developments# or #enlargements# within the Perimeter Area shall be eligible for increased #floor area# only pursuant to Sections 96-21 (Special Regulations for 42nd Street Perimeter Area) or 96-22 (Special Regulations for Eighth Avenue Perimeter Area). Because of increased pressures for #development#, the relocation and demolition provisions of Section 96-24 (Relocation and Demolition of Buildings in the Perimeter Area) shall apply therein for all demolition, #development#, #enlargement# or #extensions# on lots containing #residential uses#. All existing legal #uses# in enclosed #buildings# shall be considered conforming #uses#. Except as otherwise provided in this Chapter, any existing #commercial# or #manufacturing uses# may be changed to another #non-conforming use# only in accordance with the provisions of Sections 52-31 (General Provisions), 52-33 (Manufacturing or Related Uses in Residence Districts), 52-34 (Commercial Uses in Residence Districts, 52-35 (Manufacturing or Related

Uses in Commercial Districts) and 52-36 (Non-Conforming Commercial Uses in Commercial Districts).

96-21
Special Regulations for 42nd Street Perimeter Area

The provisions of this Section shall apply ~~to #developments# or #enlargements# located~~ in all #Commercial Districts# within the area bounded by the following:

Starting 150 feet west of Eighth Avenue, south to the southern boundary of West 41st Street, west to the east side of Twelfth Avenue, north along the eastern border of Twelfth Avenue to 43rd Street, east on West 43rd Street to the eastern side of Tenth Avenue, south along Tenth Avenue to the southern boundary of West 42nd Street, east on West 42nd Street to Ninth Avenue, north along the western boundary of Ninth Avenue to the midblock of 42nd/43rd Street, east to a point 150 feet west of Eighth Avenue, south to the southerly boundary of 41st Street.

(a) Special regulations for office use

In the 42nd Street Perimeter Area, as shown in Appendix A of this Chapter, any #development# or #enlargement# that includes Use Group 6B offices ~~constructed~~ #developed# or #enlarged# after January 19, 2005, shall be permitted only pursuant to Section 93-13 (Special Office Use Regulations).

(b) Floor area regulations

(1) Floor area regulations in Subarea 1

In Subarea 1 of the 42nd Street Perimeter Area as shown in Appendix A, the basic #floor area ratio# ~~of any #development# or #enlargement#~~ on a #zoning lot# shall be 10.0, and may be increased to a maximum of 12.0 only in accordance with the provisions of Section 23-90 (INCLUSIONARY HOUSING), except that any units for which a #floor area# increase has been earned pursuant to Section 23-90 shall be within the #Special Clinton District#.

(2) Floor area regulations in Subarea 2

In Subarea 2 of the 42nd Street Perimeter Area, as shown in Appendix A, the basic #floor area ratio# ~~of any #development# or #enlargement#~~ on a #zoning lot# shall be 10.0. However, the #floor area ratio# of any ~~#development# or #enlargement#~~ #zoning lot# containing #residential use# may exceed 10.0 to a maximum of 12.0 only in accordance with the provisions of Section 23-90, except that any units for which a #floor area# increase has been earned pursuant to Section 23-90 shall be within the #Special Clinton District#. For #zoning lots# containing #developments# or #enlargements# that have fully utilized the Inclusionary Housing Program, the maximum permitted #floor area ratio# may be increased from 12.0 to 15.0 for new legitimate theater use in accordance with the provisions of Section 96-25 (Floor Area Bonus for New Theater Use).

Any #development# or #enlargement# on a #zoning lot# that includes the area bounded by a line 129 feet east of and parallel to Tenth Avenue, West 42nd Street, a line 184 feet east of and parallel to Tenth Avenue, and a line 50 feet south of and parallel to West 42nd Street shall provide an easement or other agreement for public access to the subway mezzanine or station, as illustrated on the District Map in Appendix A of this Chapter.

An instrument establishing such transit easement or other agreement shall be filed and duly recorded in the Borough Office of the City Register of the City of New York, and indexed against the property.

Floor space within the volume governed by such transit easement or other agreement shall be excluded from the definition of #floor area#, and may be temporarily used by the owner of the #zoning lot# for any permitted #uses# until such time as required by the Transit Authority or by its designee for subway purposes. Improvements or construction of a temporary nature within the volume governed by such transit easement or other agreement for such temporary #uses# shall be removed by the owner of the #zoning lot# prior to the time at which public #use# of the volume area is required. A minimum notice of six months in writing shall be given by the Transit Authority to the owner of the #zoning lot# in order to vacate the tenants of such temporary #uses#.

The provisions of paragraph (b) of Section 93-65 (Transit Facilities) shall apply to any subway-related #uses# consisting of ventilation facilities and other facilities or services used or required in connection with the operation of a subway line or station on the tax lot located at Block 1051, Lot 2, existing on October 27, 2010, up to a height of 73 feet, as illustrated on the District Map in Appendix A of this Chapter.

(c) Retail continuity requirements

For #buildings developed# or portions of #buildings enlarged# after August 17, 1990, where the ground floor level of such #development# or the #enlarged# portion of the #building# fronts upon West 42nd Street, between 9th and 12th Avenues:

(1) ~~For any #development# or #enlargement# fronting on West 42nd Street, between 9th and 12th Avenues,~~ at least 50 percent of the #street# frontage of ~~the ground floor, or~~ #stories# that have a floor level within five feet of #curb level#, shall be limited to Use Groups 4A, 6A, 6C, 10A, 11, 12A and 12B~~.~~; and

(2) ~~At~~ at least 50 percent of the length of the facade of such #street wall# fronting on West 42nd Street shall be glazed with transparent material to a height of not less than 16 feet above #curb level#. The lowest point of such glazed area shall not be higher than four feet above #curb level#.

(d) Street wall continuity requirements

(1) At least 80 percent of the #aggregate width of street walls# of a #building# fronting on West 42nd Street, up to a height of 45 feet, shall be located within 10 feet of the #street line# of such #street#.

(2) The minimum height of the #street wall# of a #building# above #curb level# shall be no less than 45 feet, or the height of the #building#, whichever is less, and no more than 85 feet. Above this required height, the #street wall# of a #building# shall set back at least five feet. The requirements of this paragraph shall also apply to any ~~#development# or #enlargement#~~ #building# on a #wide street# frontage within a distance of 50 feet from its intersection with West 42nd Street.

* * *

96-22
Special Regulations for Eighth Avenue Perimeter Area

For ~~#developments# or #enlargements#~~ #zoning lots# or portions thereof located in an area bounded by a line 150 feet west of Eighth Avenue, West 56th Street, Eighth Avenue and West 45th Street, excluding such area between West 49th and West 50th Streets, the #floor area ratio# permitted by the underlying district may be increased from 10.0 to 12.0 only pursuant to Section 23-90 (INCLUSIONARY HOUSING), except that any units for which a #floor area# increase has been earned pursuant to Section 23-90 shall be within the #Special Clinton District#.

All #developments# or #enlargements# located in an area bounded by a line 150 feet west of Eighth Avenue, West 45th Street, Eighth Avenue and West 42nd Street shall comply with special

regulations set forth in Article VIII, Chapter 1 (Special Midtown District), including Sections 81-21 (Floor Area Regulations) and 81-70 (SPECIAL REGULATIONS FOR THEATER SUBDISTRICT). For #developments# or #enlargements# that utilize a #floor area# increase pursuant to the Inclusionary Housing Program of Section 23-90, any units for which a #floor area# increase has been earned shall be within the #Special Clinton District#.

96-23
Special Permit for Modification of Height and Setback Regulations

Except within the Eighth Avenue Perimeter Area set forth in Section 96-22 (Special Regulations for Eighth Avenue Perimeter Area), the City Planning Commission, by special permit, may permit modification of height and setback regulations for #developments# or #enlargements# which have generated an increase in the #floor area ratio# of not more than 2.0 under the provisions of Section 96-21 (Special Regulations for 42nd Street Perimeter Area), provided that such modification is necessary to achieve better site planning.

The Commission may prescribe additional conditions and safeguards to minimize adverse effects on the character of the surrounding area.

* * *

96-25
Floor Area Bonus for New Theater Use

* * *

(e) a legal commitment has been provided for continuance of the #use# of all #floor area# in the bonused performance space as legitimate theater or non-profit performing arts space and providing that in the event of a change of operator, as defined by the Commissioner of the Department of Cultural Affairs, the owner or operator shall obtain a new letter certifying that the provisions of paragraphs (c)(1), (c)(2) and (c)(3) of this Section have been met as to the proposed operator and, where substantial renovation of the performance space, as defined by the Commissioner of the Department of Cultural Affairs, is being proposed in conjunction with the change of operator, that the provisions of paragraphs (c)(3) and (c)(4) of this Section have been met as to such substantial renovation. Any application or submission with respect to a change in operator made pursuant to the provisions of such legal commitment, shall be referred to the affected Community Board. The Commissioner of the Department of Cultural Affairs shall not issue a letter with respect to such application prior to forty-five days after such referral. Such legal commitment shall also prohibit #use# as an #adult establishment# for the life of the related #development# or #enlargement#.

* * *

96-30
OTHER AREAS

* * *

96-31
Special Regulations in R8 Districts

In R8 Districts in Other Areas west of Tenth Avenue, the following special regulations shall apply:

(a) the provisions of Sections 96-101 (Floor area regulations) and 96-104 (Height regulations) shall apply ~~to all #developments# and #enlargements#~~; and

(b) the provisions of Section 96-102 (Lot coverage regulations) shall apply ~~to all #developments# and #enlargements#~~, except that for all portions of a #zoning lot#

located in an Other Area and more than 100 feet from the #street line# of a #wide street#, the maximum #lot coverage# shall not exceed 70 percent of the portion of the #zoning lot# in the Other Area.

96-40
MODIFICATION OF GENERAL LARGE-SCALE DEVELOPMENT PROVISIONS

For parcels within the #blocks# bounded by West 50th Street, Tenth Avenue, West 56th Street and Eleventh Avenue ~~known as the Clinton Community Urban Renewal Development Area~~, within a #general large-scale development# that occupies #zoning lots# on more than one #block#, the City Planning Commission may permit the modification of #open space# required pursuant to Section 23-14 (Minimum Required Open Space, Open Space Ratio, Maximum Lot Coverage and Maximum Floor Area Ratio) as part of a special permit, pursuant to Section 74-743 (Special provisions for bulk modifications), provided the Commission finds that:

* * *

96-50
REGULATIONS APPLICABLE TO ALL AREAS

The provision of Sections 96-51 (Mandatory Tree Planting Provisions), ~~and~~ 96-52 (Bulk Modifications for Public Parking Garages) and 96-53 (Conversions to Residential Use) shall apply to all areas within the Special District.

* * *

96-53
Conversions to Residential Use

For #conversions# to #residential use# of #buildings# predominantly occupied by #uses# listed in Use Groups 3, 4 or 5 that exceed the #residential floor area# permitted by the applicable district regulations, the City Planning Commission, by special permit, may permit such #buildings# to be #converted# to #residential use# in its entirety, provided that ~~the~~ such #buildings# includes social or recreational space primarily for the use of ~~#residential# tenants~~ occupants of #dwelling units# or #rooming units# in the #development# and which may also be made available to the community.

* * *

As a condition of approval, the Commission shall find:

(a) that because of site and building limitations such modifications are necessary for the proper design and functioning of the #converted ~~#~~building#;

* * *

(e) that such #conversion# will not unduly increase the density of population or intensity of #use# to the detriment of the occupants of #buildings# in the #block# or nearby #blocks#.

* * *

96-60
SPECIAL PERMIT PROCEDURE

* * *

96-602
Relationship to public improvement projects

In all cases, the Commission shall deny a special permit application whenever the #development# or #enlargement# will interfere with a public improvement project, including housing, highways, public buildings or facilities, redevelopment or renewal projects, or rights-of-

way for sewers, transit, or other public facilities, which is approved by or pending before the Board of Estimate or City Planning Commission, as determined from the Calendar of each such agency issued prior to the date of the public hearing on the application for a special permit.

* * *

96-80
EXCLUDED AREAS

Except as provided in this Section, the regulations set forth in this Chapter shall not apply to the following areas:

(a) parcels within the blocks bounded by West 50th Street, Tenth Avenue, West 56th Street and Eleventh Avenue ~~known as the Clinton Community Urban Renewal Development Area~~, provided that in this area the provisions of Sections 96-40 (MODIFICATION OF GENERAL LARGE-SCALE DEVELOPMENT PROVISIONS), 96-51 (Mandatory Tree Planting Provisions) and 96-81 (C6-3X Designated District) shall apply.

* * *

(c) ~~the site of the proposed Educational Construction Fund project which will include P.S. 51 located on~~ property bounded by West 45th Street, the easterly right-of-way of the ~~Penn Central Railroad~~ Amtrak Empire Line, West 44th Street and Eleventh Avenue, provided that in this area the provisions of Section 93-82 (R10 Inclusionary Housing Designated Area) shall apply;

* * *

96-82
R10 Inclusionary Housing Designated Area

* * *

[revised map to replace previous map:]

Article IX - Special Purpose Districts
Chapter 7
Special 125th Street District

97-00
GENERAL PURPOSES

* * *

~~**97-01**~~
~~**Definitions**~~

~~Special 125th Street District~~

~~The "Special 125th Street District" is a Special Purpose District designated by the number "125" in which special regulations set forth in Article IX, Chapter 7, apply. The #Special 125th Street District# appears on the #zoning maps# superimposed on other districts and its regulations supersede, supplement and modify those of the districts upon which it is superimposed.~~

97-02
General Provisions

In harmony with the general purposes of the #Special 125th Street District# and in accordance with the provisions of this Chapter, the express requirements of the Special District shall apply ~~to all #developments#, #enlargements#, alterations and changes of #use#~~ within the Special District. ~~The regulations of the Special District shall supersede, supplement or modify the requirements of the underlying zoning districts on which the Special District is superimposed, except as described in Section 97-05 (Applicability of Special Transit Land Use District Regulations).~~

Except as modified by the particular provisions of the Special District, the regulations of the underlying zoning districts shall remain in effect. In the event of a conflict between the provisions of this Chapter and other regulations of this Resolution, the provisions of this Chapter shall control.

* * *

97-10
SPECIAL USE AND LOCATION REGULATIONS

* * *

97-12
Arts and Entertainment Use Requirement

Within the Core Subdistrict, as shown on the map in Appendix A of this Chapter, or for that portion of a #zoning lot# located within the Core Subdistrict, for ~~new #developments# or #enlargements#~~ #buildings# or portions of #buildings developed# or #enlarged# after April 30, 2008 that contain at least 60,000 square feet of #floor area# and are located on #zoning lots# with frontage on 125th Street, an amount of space equivalent to a minimum of five percent of the #floor area# of the #development# or #enlargement# shall be occupied by one or more of the #uses# designated in Section 97-11 (Special Arts and Entertainment Uses).

97-20
LOCATION AND ACCESS REGULATIONS

~~Within the #Special 125th Street District#, for~~ For any #zoning lot# that fronts upon 125th Street, the #use# regulations of the underlying districts shall be modified by the locational and access requirements of this Section, inclusive. On #through lots# or #corner lots# with frontage along 125th Street, such requirements shall apply within the first 100 feet of the 125th Street #street line#.

97-21
Location of and Access to ~~of~~ Arts and Entertainment Uses

Any arts and entertainment #uses# listed in Section 97-11 that are provided in order to comply with the requirements of Section 97-12 (Arts and Entertainment Use Requirement) or Section 97-422 (Floor area bonus for visual or performing arts uses) shall be subject to the following location and access requirements:

* * *

97-22
Uses Not Permitted on the Ground Floor of Buildings

~~Within the #Special 125th Street District#, the~~ The following #uses# are not permitted within #stories# that have a floor level within five feet of #curb level# ~~at the ground floor level of #developments# and #enlargements#~~ in #buildings developed# after April 30, 2008 or within #stories# that have a floor level within five feet of #curb level# within portions of #buildings enlarged# after April 30 ,2008 where such #building# or portion of a #building# fronts ~~that front~~ upon 125th Street, or is within 100 feet from 125th Street~~, or within five feet of the as-built level of the adjoining sidewalk~~. Entranceways and lobby space for access to such #uses# shall be permitted at the ground floor level, pursuant to the provisions of Section 97-221 (Access to non-ground floor uses).

* * *

From Use Groups 6A, 6B, 6C and 6E:

> Banks (except for automated teller machines, provided the ~~length~~ width of #street# frontage allocated for automated teller machines shall be no more than 25 feet or 40 percent of the frontage of the #zoning lot#, whichever is less, measured to a depth of 30 feet from 125th Street, except that such frontage need not be less than 20 feet), electrolysis studios, frozen food lockers, laundry establishments, loan offices, offices or veterinary medicine offices.

* * *

Within the Special District, for such #developments# and #enlargements# that are no more than one #story#, a #use# permitted by the regulations of the underlying district shall be allowed.

97-221
Access to non-ground floor uses

~~Within the Special District, for~~ For non-ground floor #uses# listed in Section 97-22 with access from 125th Street, the following requirements shall apply:

(a) Within the Core Subdistrict the #residential# portion of a ~~#building#~~ #development# or #enlargement# may be accessed from an entrance on 125th Street only if such ~~#building#~~ #development# or #enlargement# does not front upon a #street# other than 125th Street.

(b) The ~~length~~ width of the ground floor #street# frontage on 125th Street allocated to an entranceway or lobby space shall be no more than 25 linear feet or 40 percent of such #street# frontage, whichever is less, except that an entranceway or lobby space need not be less than 20 feet.

(c) For a #development# or #enlargement# with more than one entranceway or lobby on 125th Street for non-ground floor #uses#, each entranceway or lobby for #uses# listed in Section 97-22 shall be no more than 25 linear feet and, in the aggregate, shall not exceed 40 percent of such ground floor frontage.

(d) For #developments# or #enlargements# with at least 200 linear feet fronting on 125th Street, the ~~length~~ width of #street# frontage on 125th Street allocated to entranceways or lobby space for such #uses# shall be no more than 40 linear feet.

* * *

97-24
Security Gates

Within the #Special 125th Street District#, all security gates installed after April 30, 2008, that are swung, drawn or lowered to secure #commercial# or #community facility# premises shall, when closed, permit visibility of at least 75 percent of the area covered by such gate when viewed from the #street#, except that this provision shall not apply to entrances or exits to parking garages.

* * *

97-40
SPECIAL BULK REGULATIONS

Within the #Special 125th Street District#, all ~~#residential~~ developments# or #enlargements# containing #residences# shall comply with the requirements of Article II, Chapter 8 (Quality Housing) and the applicable #bulk# regulations of the underlying districts, except as modified in this Section, inclusive.

97-41
Floor Area Regulations

* * *

97-411
Maximum floor area ratio in C4-4D, C4-7 and C6-3 Districts

In C4-4D, C4-7 or C6-3 Districts, the maximum permitted #floor area ratios# ~~for new #developments# or #enlargements#~~ shall be as listed in the following table for #residential#, #commercial# and #community facility uses#, and may only be increased pursuant to Section 97-42 (Floor Area Bonuses).

MAXIMUM PERMITTED FLOOR AREA RATIO (FAR)
FOR RESIDENTIAL, COMMERCIAL AND COMMUNITY FACILITY USES

	Outside the Core Subdistrict			Within the Core Subdistrict		
District	#Residential Floor Area Ratio#	#Commercial ~~#Floor~~ Floor Area Ratio#	#Community Facility ~~#Floor~~ Floor Area Ratio#	#Residential Floor Area Ratio#	#Commercial ~~#Floor~~ Floor Area Ratio#	#Community Facility ~~#Floor~~ Floor Area Ratio#
C4-4D	5.4	4.0	6.0	5.4	4.0	6.0
C4-7	9.0	10.0	10.0	5.4	7.2	7.2
C6-3	6.0	6.0	6.0	5.4	6.0	6.0

* * *

97-42
Floor Area Bonuses

The maximum #floor area ratio# ~~for a #development# or #enlargement# within the #Special 125th Street District#~~ may be increased by a #floor area# bonus, pursuant to Sections 23-90 (INCLUSIONARY HOUSING), inclusive, or 97-422 (Floor area bonus for visual or performing arts uses), which may be used concurrently.

* * *

97-422
Floor area bonus for visual or performing arts uses

In C4-4D, C4-7 or C6-3 Districts within the #Special 125th Street District#, for a ~~new~~ #development# or #enlargement# with frontage on 125th Street, the maximum #floor area ratio# otherwise permitted for #residential# or #commercial uses# listed in Section 97-411 may be increased up to the maximum #floor area ratio# specified in the following table, provided that for every four square feet of bonused #floor area#, an amount of space equivalent to one square foot of such bonused #floor area# shall be used for those visual or performing arts #uses# designated in paragraph (b) of Section 97-11 (Special Arts and Entertainment Uses). Such bonused #floor area# shall be permitted only upon certification by the Chairperson of the City Planning Commission to the Commissioner of Buildings that the conditions set forth in Section 97-423 have been met.

MAXIMUM PERMITTED FLOOR AREA RATIO (FAR)
FOR RESIDENTIAL AND COMMERCIAL USES WITH
FLOOR AREA BONUS FOR VISUAL OR PERFORMING ARTS USES

	Outside the Core District				Within the Core Subdistrict			
	#Residential Floor Area Ratio#		#Commercial ~~#Floor~~ Floor Area Ratio#		#Residential Floor Area Ratio#		#Commercial ~~#Floor~~ Floor Area Ratio#	
	Base	Maximum	Base	Maximum	Base	Maximum	Base	Maximum
C4-4D	5.4	7.2	4.0	5.4	5.4	7.2	4.0	5.40
C4-7	9.0	12.0	10.0	12.0	5.4	7.2	7.2	8.65
C6-3	6.0	8.0	6.0	8.0	5.4	7.2	6.0	8.00

97-423
Certification for floor area bonus for visual or performing arts uses

The #floor area# bonus provisions of Section 97-422 shall apply only upon certification by the Chairperson of the City Planning Commission to the Commissioner of Buildings that the following conditions have been met:

* * *

(b) Drawings also have been provided that clearly designate all #floor area# and/or below grade floor space for any new visual or performing arts #uses# for which a bonus is to be received pursuant to Section 97-422.

Such drawings shall be of sufficient detail to show that such designated space shall be designed, arranged and used for the new visual arts or performing arts #uses#, and shall also show that:

* * *

(3) in the case of primary rehearsal space, where such space does not consist of #accessory uses# subject to the requirements of paragraph (b)(4) of this Section, such space:

(i) can be adapted for rehearsals or performances open to the public;

(ii) is located on the first #story# of the ~~#development#~~ #building# or on any higher #story# with a ceiling height not greater than 60 feet above grade;

* * *

(e) A legal commitment by the owner has been provided for continued occupancy of all #floor area# for which a bonus has been received, pursuant to this Section, as a visual or performing arts space only in accordance with the drawings and design plans provided pursuant to paragraphs (b) and (c) (5) of this Section, and providing further that in the event of a change of operator, the owner or operator shall obtain a new certification pursuant to this Section. An #adult establishment# #use# shall be prohibited for the life of the #development# or #enlargement#.

* * *

97-44
Special Height and Setback Regulations

* * *

97-441
Permitted obstructions

The provisions of Section 33-42 (Permitted Obstructions) shall apply ~~to all #buildings# within the Special District~~, except that the provisions of paragraph (c) shall not apply. In lieu thereof, the following regulations shall apply:

Elevator or stair bulkheads, roof water tanks, cooling towers or other mechanical equipment (including enclosures) may penetrate a maximum height limit or #sky exposure plane# provided that either:

* * *

97-442
Height and setback regulations for C4-7 and C6-3 Districts

The following modifications of the underlying district regulations shall apply for C4-7 and C6-3 Districts within the Special District:

(a) The minimum and maximum base height of the #street wall# and the maximum height of a ~~#development# or #enlargement#~~ #building or other structure# shall be ~~modified,~~ as set forth in the following table:

MINIMUM BASE HEIGHT, MAXIMUM BASE HEIGHT AND MAXIMUM BUILDING HEIGHT

	Street Wall Height (in feet)		
District	Minimum Base Height	Maximum Base Height	Maximum #Building or other Structure# Height (in feet)
C4-7	60	85	195
	60	85	160

C6-3

All portions of #buildings or other structures# that exceed a height of 85 feet in C4-7 and C6-3 Districts shall be set back at least 15 feet from the #street line#, except that such setback depth may include the depth of any permitted recess in the #street wall#, according to the provisions of 97-433 (Street wall location).

(b) Special regulations for certain C4-7 Districts

(1) For the area located within 50 feet of the 126th Street frontage and between 200 feet east of Adam Clayton Powell Boulevard and 150 feet west of Lenox Avenue/Malcolm X Boulevard, the height of any portion of a ~~#development# or #enlargement#~~ #building or other structure# shall be limited to 80 feet.

(2) For #zoning lots# bounded by 125th Street, Park Avenue and 124th Street, the maximum ~~#building#~~ height of a #building or other structure# shall be 330 feet.

* * *

97-443
Street wall location

In all #Commercial Districts# ~~within the #Special 125th Street District#~~, the #street wall# ~~of any #development# or #enlargement#~~ shall be located on the #street line# of 125th Street and extend along the entire #street# frontage of the #zoning lot# up to at least the applicable minimum base height of the underlying district, or the height of the #building#, whichever is less.

The #street wall# location provisions of such #Commercial Districts# shall be modified, as follows:

* * *

(c) Recesses, not to exceed three feet in depth from the #street line#, shall be permitted on the ground floor where required to provide access to the #building#. Above a height of the second #story# and up to the applicable maximum base height, recesses are permitted for #outer courts# or balconies, provided that the aggregate ~~length~~ width of such recesses does not exceed 30 percent of the ~~length~~ width of the #street wall# at any level, and the depth of such recesses does not exceed five feet. No recesses shall be permitted within 20 feet of an adjacent #building# or within 30 feet of the intersection of two #street lines#, except in compliance with corner articulation rules.

(d) ~~All #developments# or #enlargements# shall comply with the~~ The #street wall# location and minimum #street wall# height provisions of this Section~~, except that such requirements~~ shall not apply to any existing #buildings# that are to remain on the #zoning lot#.

(e) For any #development# or #enlargement# within the #Special 125th Street District# that is partially within the #Special Transit Land Use District# and located directly over the planned Second Avenue subway line tunnel, the #residential# portion of such #development# or #enlargement# may be ~~subject~~ constructed pursuant to the R8A #street wall# requirements and the #commercial# portion of such #development# or #enlargement# may be ~~subject~~ constructed pursuant to the C4-4D #street wall# requirements in lieu of the requirements of this Section.

* * *

97-50
SPECIAL OFF-STREET PARKING AND OFF-STREET LOADING REGULATIONS

* * *

97-54
Parking Access through ~~Residential~~ Zoning Lots in Residence Districts

~~When a #residential~~ For a #zoning lot# within a #Residence District# which #zoning lot# fronts upon either 124th or 126th Street ~~within the #Special 125th Street District#~~ and the #rear lot line# abuts a #zoning lot# that fronts only on 125th Street, and such #zoning lot# has been vacant since April 30, 2008, access for parking and loading purposes may be ~~made~~ provided through such #zoning lot#.

* * *

Article IX - Special Purpose Districts
Chapter 8
Special West Chelsea District

* * *

98-10
SPECIAL USE AND PARKING REGULATIONS WITHIN THE SPECIAL WEST CHELSEA DISTRICT

* * *

98-12
Modification of Use Regulations in C6 Districts

* * *

98-122
Location within buildings

In any C6 District in the #Special West Chelsea District#, the provisions of Section 32-422 (Location of floors occupied by ~~non-residential~~ commercial uses) are modified to permit non-#residential uses# on the same #story# as a #residential use# or on a #story# higher than that occupied by #residential uses#, provided that the non-#residential uses#:

(a) are located in a portion of the #building# that has separate direct access to the #street# with no access to the #residential# portion of the #building# at any #story#; and

(b) are not located directly over any portion of a #building# containing #dwelling units#, except this limitation shall not preclude the location of:

(1) #residential# lobby space below or on the same #story# as non-#residential uses#; or

(2) a #commercial use# that fronts on the #High Line# and is located within five feet of the level of the #High Line bed#.

* * *

98-14
Ground Floor Use and Transparency Requirements on Tenth Avenue

The special ground floor #use# and glazing regulations of this Section apply to that portion of a #building or other structure# fronting on Tenth Avenue in the #Special West Chelsea District#.

#Uses# ~~located on the ground floor level or~~ within #stories# that have a floor level within five feet of #curb level#, and within 25 feet of the #street line#, shall be limited to #commercial uses# permitted by the underlying district or museums or non-commercial art galleries as listed in Use Group 3. A building's #street# frontage shall be allocated exclusively to such #uses#, except for lobby space or entryways. In no event shall the length of #street# frontage occupied by lobby space or entryways exceed, in total, 40 feet or 50 percent of the building's total #street# frontage, whichever is less.

For any #building# or portion of a #building developed# or #enlarged# after June 23, 2005 ~~#development# or #enlargement#~~, each ground floor #street wall# shall be glazed with materials which may include show windows, glazed transoms or glazed portions of doors. Such glazed area shall occupy at least 70 percent of such ground floor #street wall# surface. The lowest point at any point of transparency that is provided to satisfy the requirements of this Section shall be not higher than two feet above the level of the adjoining sidewalk or public access area and shall be no less than eight feet in height measured from such lowest point. Not less than 50 percent of such ground floor #street wall# surface shall be glazed with transparent materials, and up to 20 percent of such ground floor #street wall# may be glazed with translucent materials.

98-141
Transparency requirements within Subareas H and I

The transparency requirements of this Section shall apply to all portions of ~~#developments# and #enlargements#~~ #buildings developed# or #enlarged# after June 23, 2005 within the #High Line frontage# of Subareas H and I, except for such portions that contain #dwelling units#. At least 70 percent of the area of such frontage, to be measured from a point not lower than four feet and not higher than eight feet above the level of the #High Line bed# shall be glazed and transparent and at least 75 percent of such glazed surface shall be fully transparent.

98-15
Security Gates

All security gates installed after June 23, 2005, that are swung, drawn, or lowered to secure #commercial# or #community facility# premises shall, when closed, permit visibility of at least 75 percent of the façade area covered by such gate, when viewed from the #street#, except that this provision shall not apply to entrances or exits to parking facilities.

98-16
Signs

The #sign# regulations of the underlying districts in the #Special West Chelsea District# shall not apply to #signs# located within 50 feet of the #High Line#, except for #signs# located entirely below the level of the #High Line bed#. In lieu thereof, the #sign# regulations of a C1 District shall apply, except that #accessory signs# located within the #High Line frontage# may have a maximum height of 20 feet above the level of the #High Line bed#.

No #signs# affixed to or resting upon the #High Line# shall be permitted, except as pursuant to a signage plan for the #High Line#, as authorized by the City Planning Commission, provided the Commission finds that such signage plan will:

(a) enhance the use of the #High Line# by providing signage that is consistent with the use of the #High Line# as a public open space;

(b) provide, at a minimum, directional, informational and interpretive signage consistent with the use of the #High Line# as a public open space;

(c) be integrated with the design of the #High Line# open space; and

(d) not adversely affect ~~#development#~~ development adjacent to the #High Line# and in the surrounding neighborhood.

* * *

98-20
FLOOR AREA AND LOT COVERAGE REGULATIONS

* * *

98-22
Maximum Floor Area Ratio and Lot Coverage in Subareas

For all #zoning lots#, or portions thereof, located in Subareas A through I, the maximum #floor area ratios#, #open space ratios# and #lot coverages# of the applicable underlying district shall not apply. In lieu thereof, the maximum #floor area ratio# permitted for #commercial#, #community facility# and #residential uses#, separately or in combination, shall be as specified in the table in this Section. For #residential use#, the maximum #lot coverage# shall be 70

percent for #interior# or #through lots# and 80 percent for #corner lots#, except that no maximum #lot coverage# shall apply to any #zoning lot# comprising a #corner lot# of 5,000 square feet or less. For the #conversion# to #dwelling units# of non-#residential ~~buildings~~ floor area#~~, or portions thereof~~, where the total #residential floor area# on the #zoning lot# will exceed the applicable basic maximum #floor area ratio# specified in the table in this Section, such excess #residential floor area# shall only be permitted pursuant to Section 98-26 (Modifications of Inclusionary Housing Program).

* * *

98-25
High Line Improvement Bonus

For #zoning lots# located between West 16th and West 19th Streets over which the #High Line# passes, the applicable basic maximum #floor area ratio# of the #zoning lot# may be increased up to the amount specified in Section 98-22 (Maximum Floor Area Ratio and Lot Coverage in Subareas), provided that:

(a) Prior to issuing a building permit for any #development# or #enlargement# on such #zoning lot# ~~that anticipates using #floor area#~~ that would increase the applicable basic maximum #floor area ratio# by up to an amount specified in Section 98-22, the Department of Buildings shall be furnished with a certification by the Chairperson of the City Planning Commission that:

(1) a contribution has been deposited into an escrow account or similar fund established by the City (the High Line Improvement Fund), or such contribution is secured by letter of credit or other cash equivalent instrument in a form acceptable to the City. Such contribution shall be used at the direction of the Chairperson solely for improvements to the #High Line# within the #High Line# improvement area, as shown in Appendix C of this Chapter, applicable to such #zoning lot#, with such contribution being first used for improvements within that portion of the #High Line# improvement area on such #zoning lot#. Such contribution shall be made in accordance with the provisions of Appendix D or E of this Chapter, as applicable;

* * *

(b) Prior to issuing a certificate of occupancy for any portion of a #development# or #enlargement# on a #zoning lot# located between West 17th and West 18th Streets over which the #High Line# passes that would increase the applicable basic maximum #floor area ratio# by up to an amount specified in Section 98-22, the Department of Buildings shall be furnished a certification by the Chairperson of the City Planning Commission that:

(1) if required pursuant to agreement with the City under Appendix D, #High Line# improvements within the #High Line# improvement area, as shown in Appendix C of this Chapter, for such #zoning lot# have been performed in accordance with such agreement;

* * *

(c) Prior to issuing a certificate of occupancy for any portion of a #development# or #enlargement# on a #zoning lot# located between West 16th and 17th Streets or between West 18th and 19th Streets over which the #High Line# passes that incorporates #floor area# that would increase the applicable basic maximum #floor area ratio# by up to an amount specified in Section 98-22, the Department of Buildings shall be furnished a certification by the Chairperson, that:

(1) if required pursuant to agreement with the City under Appendix E, #High Line# improvements within the #High Line# improvement area, as shown in Appendix C of this Chapter, for such #zoning lot# have been performed in accordance with such agreement;

* * *

98-26
Modifications of Inclusionary Housing Program

* * *

98-262
Floor area increase

For #developments# or #enlargements# that have increased their permitted #floor area# through the transfer of development rights from the #High Line Transfer Corridor# by the minimum amount specified in the table in Section 98-22 (Maximum Floor Area Ratio and Lot Coverage in Subareas), and for #conversions# of non-#residential ~~buildings~~ floor area#~~, or portions thereof~~, to #dwelling units# where the total #residential floor area# on the #zoning lot# will exceed the applicable basic maximum #floor area ratio# specified in the table in Section 98-22, such maximum permitted #floor area# may be increased through the provision of #affordable housing# pursuant to the Inclusionary Housing Program as modified in Section 98-26, inclusive, to the maximum amount specified in the table in Section 98-22, provided that:

(a) In C6-4 Districts:

(1) the amount of #low income floor area# is equal to at least 20 percent of the total #residential floor area# on the #zoning lot#;

(2) the amount of #low income floor area# is equal to at least 10 percent of the total #residential floor area# on the #zoning lot# and the amount of #moderate income floor area# is equal to at least 15 percent of the total #residential floor area# on the #zoning lot#; or

(3) the amount of #low income floor area# is equal to at least 10 percent of the total #residential floor area# on the #zoning lot# and the amount of #middle income floor area# is equal to at least 20 percent of the total #residential floor area# on the #zoning lot#.

(b) In C6-3 Districts:

(1) the amount of #low income floor area# is equal to at least 10 percent of the total #residential floor area# on the #zoning lot#;

(2) the amount of #low income floor area# is equal to at least five percent of the total #residential floor area# on the #zoning lot# and the amount of #moderate income floor area# is equal to at least 7.5 percent of the total #residential floor area# on the #zoning lot#; or

(3) the amount of #low income floor area# is equal to at least five percent of the total #residential floor area# on the #zoning lot# and the amount of #middle income floor area# is equal to at least 10 percent of the total #residential floor area# on the #zoning lot#.

For the purposes of this Section, #low income floor area# may be considered #moderate income floor area# or #middle income floor area#, and #moderate income floor area# may be considered #middle income floor area#.

However, in those subareas, or portions thereof, where the Inclusionary Housing Program is applicable, and where the Chairperson of the Department of City Planning has certified that at least 90 percent of the total development rights within the #High Line Transfer Corridor# have been transferred pursuant to Section 98-30, no transfer of #floor area# pursuant to Section 98-30 shall be required, and the basic maximum #floor area ratio# of a #zoning lot# containing the #development# or #enlargement# may be increased by up to 2.5 in Subareas B, C and D and on any #zoning lot# located in Subarea I over which

the #High Line# does not pass, and up to 5.5 in Subarea A, in accordance with the provisions of paragraph (c) of this Section.

(c) Affordable Housing Fund

Where the Chairperson of the City Planning Commission determines that more than 90 percent of the #floor area# eligible for transfer through the provisions of Section 98-30 have been transferred in accordance with such provisions, the Chairperson shall allow, by certification, an increase in #floor area# on any receiving site as specified in Section 98-33 (Transfer of Development Rights From the High Line Transfer Corridor), up to the amount that otherwise would have been permitted for such receiving site pursuant to Section 98-30, provided that instruments in a form acceptable to the City are executed ensuring that a contribution be deposited in the West Chelsea Affordable Housing Fund. Such fund shall be administered by the Department of Housing Preservation and Development and all contributions to such fund shall be used for the ~~#development#~~ development, acquisition or rehabilitation of #low~~er~~#, #moderate# or #middle income housing# located in Community District 4 in the Borough of Manhattan. The execution of such instruments shall be a precondition to the filing for or issuing of any building permit for any #development# or #enlargement# utilizing such #floor area# increase. Such contribution amount, by square foot of #floor area# increase, shall be determined, at the time of such Chairperson's certification, by the Commission by rule, and may be adjusted by rule not more than once a year.

* * *

98-30
HIGH LINE TRANSFER CORRIDOR

* * *

98-35
High Line Transfer Corridor Bonus

For #zoning lots#, or portions thereof, within the #High Line Transfer Corridor#, the applicable basic maximum #floor area ratio# of that portion of a #zoning lot# that is within the #High Line Transfer Corridor# may be increased up to a maximum of 1.0, for an amount of #floor area# equivalent to the area of that portion of the #zoning lot# located within the #High Line Transfer Corridor#, provided the Chairperson of the City Planning Commission has certified that:

(a) all the permitted #floor area# on that portion of the #zoning lot# that is within the #High Line Transfer Corridor# has been transferred to an eligible receiving site, in accordance with the provisions of Section 98-33;

(b) that such granting site is vacant; and

(c) a contribution has been deposited into the #High Line# Improvement Fund established under Section 98-25, to be used at the direction of the Chairperson of the City Planning Commission to assure that the #High Line# is restored and reused as a public accessible open space.

No building permit for any #development# or #enlargement# that anticipates using such increased #floor area# may be issued unless and until such certification has been made.

Such contribution amount shall be $50.00 per square foot of #floor area# as of June 23, 2005, and shall be adjusted ~~July~~ August 1 of ~~the following year and~~ each subsequent year ~~thereafter~~, by the City or its designee, based on the percentage change in the Consumer Price Index for all urban consumers as defined by the U.S. Bureau of Labor Statistics.

Such bonus #floor area# shall only be used for a permitted #commercial use#, which shall be located in that portion of the #zoning lot# that is within the #High Line Transfer Corridor#; however, #public parking lots# and #public parking garages# at or above #curb level# shall not be permitted; and the height of any #development# or #enlargement# within the #High Line

Transfer Corridor# shall not exceed a height of 3 feet, 6 inches above the level of the #High Line bed#.

98-40
SPECIAL YARD, HEIGHT AND SETBACK, AND MINIMUM DISTANCE BETWEEN BUILDINGS REGULATIONS

* * *

98-42
Special Height and Setback Regulations

* * *

98-422
Special rooftop regulations

The provisions of Section 33-42 (Permitted Obstructions) shall apply to all #buildings or other structures# within the #Special West Chelsea District#, except as modified as follows:

(a) Permitted Obstructions

(1) Elevator or stair bulkheads, roof water tanks, cooling towers or other mechanical equipment (including enclosures), may penetrate a #sky exposure plane# or a maximum height limit provided that either the product, in square feet, of the #aggregate width of street walls# of such obstructions facing each #street# frontage, times their average height, in feet, shall not exceed a figure equal to eight times the width, in feet, of the #street wall# of the #building# facing such frontage or, the #lot coverage# of all such obstructions does not exceed 20 percent of the #lot coverage# of the #building#, and the height of all such obstructions does not exceed 40 feet;

(2) ~~In addition, dormers~~ Dormers may penetrate a maximum base height in accordance with the provisions of paragraph (c) of Section 23-621 (Permitted obstructions in certain districts). However, dormers may not exceed the maximum building height in Subareas C, F and G where the maximum base height and maximum building height are the same.

(b) Ventilation and mechanical equipment

All mechanical equipment located within 15 feet of the level of the #High Line bed# that is within 25 feet of the #High Line#, measured horizontally, or within the #High Line frontage#, as applicable, shall be screened and buffered with no intake or exhaust fans or vents facing directly onto the #High Line#.

98-423
Street wall location, minimum and maximum base heights and maximum building heights

The provisions set forth in paragraph (a) of this Section shall apply to all #buildings or other structures# ~~#developments# and #enlargements#~~. Such provisions are modified for certain subareas as set forth in paragraphs (b) through (f) of this Section.

(a) On #wide streets#, and on #narrow streets# within 50 feet of their intersection with a #wide street#, the #street wall# shall be located on the #street line# and extend along such entire #street# frontage of the #zoning lot# up to at least the minimum base height specified in the table in this Section. On #corner lots# with both #wide# and #narrow street# frontages, a #street wall# with a minimum height of 15 feet shall be located on the #narrow street line# between 50 and 100 feet from its intersection with a #wide street#. On all other #narrow street# frontages, the #street wall# shall be located on the #street

line# and extend along at least 70 percent of the #narrow street# frontage of the #zoning lot# up to at least the minimum base height specified in the table in this Section.

* * *

For #developments# that occupy the entire #block# frontage of a #street# and provide a continuous sidewalk widening along such #street line#, the boundary of the sidewalk widening shall be considered to be the #street line# for the purposes of this Section.

[typographic note: paragraph break added]
The #street wall# location provisions of this Section shall not apply along that portion of any #street# frontage:

* * *

(c) Subareas C, F and G

* * *

The provisions of this Section, relating to the location and height of the lowered #street wall# portion of the Tenth Avenue frontage of a ~~#development#~~ #building# are illustrated in Diagram 1 (Street Wall and High Line Frontage Regulations in Subareas C, F and G) in Appendix C of this Chapter.

In Subarea C, for #zoning lots# with Tenth Avenue frontage between West 24th Street and West 28th Street, the maximum building height shall be 125 feet.

(d) Subarea E

The #street wall# location provisions set forth in paragraph (a) of this Section shall not apply ~~to any #development# or #enlargement#~~ on a #zoning lot# fronting on West 18th Street and located partially in Subareas D, E and G, where #floor area# has been transferred pursuant to Section 98-24. A maximum of 60 percent of the West 18th Street frontage within Subarea E may rise without setback to a maximum building height of 250 feet, and a minimum of 20 percent of the West 18th Street frontage within Subarea E shall rise without setback to a minimum height of 60 feet and a maximum height of 85 feet and be located within 10 feet of the #street line#.

* * *

98-50
SPECIAL HEIGHT AND SETBACK, OPEN AREA AND TRANSPARENCY REGULATIONS FOR ZONING LOTS WITHIN OR ADJACENT TO THE HIGH LINE TRANSFER CORRIDOR

* * *

98-53
Required Open Areas on the East Side of the High Line

~~At least 20 percent of the #lot area# of~~ For any #development# or #enlargement# on a #zoning lot#, or portion thereof, within C6-3A Districts or within Subareas A, C, F or G and over which the #High Line# passes or on a #zoning lot# adjacent to a #zoning lot# over which the #High Line# passes, ~~shall be~~ a landscaped open area shall be provided in an amount equal to at least 20 percent of the #lot area# of the portion of the #zoning lot# that is within C6-3A Districts or within Subareas A, C, F or G, pursuant to the requirements of paragraphs (a) and (b) of this Section. Such open area shall be located directly adjacent to the #High Line# with its longest side adjacent to the #High Line# and shall be located at an elevation not to exceed a height of 3 feet, 6 inches above the level of the #High Line bed# adjacent to the #zoning lot#. At no point shall such open area be located within 50 feet of Tenth Avenue.

* * *

98-54
Transparency Requirements on the East Side of the High Line

The transparency requirements of this Section shall apply to the #High Line frontage# portion of ~~#developments# and #enlargements#~~ #buildings developed# or #enlarged# after June 23, 2005 and located in C6-3A Districts and within Subareas A, C, F and G, except for such portions that contain #dwelling units#. At least 50 percent of the area of such frontage, to be measured from a point not lower than four feet and not higher than eight feet above the level of the #High Line bed#, shall be glazed and transparent and at least 75 percent of such glazed surface shall be fully transparent.

* * *

Appendix D
Special Regulations for Zoning Lots utilizing the High Line Improvement bonus in Subarea H

This Appendix sets forth additional requirements governing #zoning lots# located within Subarea H between West 17th and 18th Streets over which the #High Line# passes with respect to a #development# or #enlargement# which involves an increase in the applicable basic maximum #floor area ratio# of the #zoning lot# up to the amount specified in Section 98-22 (Maximum Floor Area Ratio in Subareas), with respect to: (1) the issuance of a building permit for such #development# or #enlargement# pursuant to paragraph (a) of Section 98-25 (High Line Improvement Bonus); and (2) the performance or funding of improvements as a condition of issuance of temporary or permanent certificates of occupancy pursuant to paragraph (b) of Section 98-25 for #floor area# in such #development# or #enlargement# which exceeds the basic maximum #floor area ratio# of the #zoning lot#. The term "parties in interest" as used herein shall mean "parties-in-interest," as defined in paragraph (f)(4) of the definition of #zoning lot# under Section 12-10.

(a) Requirements for Issuance of Building Permit under paragraph (a) of Section 98-25

* * *

(3) Upon the request of Owner, the City in its sole discretion, may elect to have Owner perform all #High Line# improvements (i.e., non-structural and non-remediation work) at its own expense within the #High Line# improvement area, as shown in Appendix C of this Chapter, on such #zoning lot# and over #streets# contiguous to such #zoning lot#. In that event, certification under Section 98-25, paragraph (a), shall also be made upon execution of an agreement by Owner, approved by the Chairperson of the City Planning Commission, to perform such improvements, the cost of which shall be refunded or credited from the contribution to the #High Line# improvement. Such agreement may require Owner to reimburse the City for the costs of a full-time resident engineer to supervise such work.

* * *

(b) Requirements for Issuance of Certificates of Occupancy under paragraph (b) of Section 98-25

(1) Structural Remediation Work under paragraph (b)(2) of Section 98-25:

(i) Owner may, at its option, elect to perform Structural Remediation Work on the portion of the #High Line# within the #High Line# improvement area, as shown in Appendix C of this Chapter, on such #zoning lot# and over #streets# contiguous thereto in accordance with the provisions of this paragraph, (b). Owner may exercise such option following receipt of the City's specifications for the Structural Remediation Work or upon the City's failure to provide such specifications, as set forth in paragraphs (iv) and (v) below (unless such dates are extended by mutual agreement of the City and Owner, but in no event may exercise such option later than 90

days following receipt of a notice by the City of its intent to commence improvements to the #High Line# within the #High Line# improvement area applicable to the #zoning lot# within the next twenty-four months. In that event, the amount of contribution to the #High Line# Improvement Fund shall be reduced by $21.00 per square foot of #floor area# which exceeds the basic maximum #floor area ratio# of the #zoning lot# up to the amount specified in Section 98-22 and the City shall refund or credit the Owner, as applicable, for any excess from or against the #High Line# Improvement Fund. In the event of exercise of such option, certification pursuant to Section 98-25, paragraph (b)(2), with respect to the Structural Remediation Work shall be of substantial completion with respect to issuance of any temporary certificate of occupancy, and of final completion with respect to issuance of any final certificate of occupancy.

* * *

(2) At-Grade Plaza Work under paragraph (b)(3) of Section 98-25:

The following shall apply, except to the extent that agreements and other instruments in a form acceptable to the City have been executed pursuant to paragraph (a)(2) of this Appendix, D, that provide for construction of some or all of the At-Grade Plaza Work set forth in subparagraphs (b)(2)(ii)(b) and (b)(2)(ii)(c), by the City:

* * *

(iv) In no event shall Owner be required to complete the At-Grade Plaza Work until the #High Line# improvements within the portion of the #High Line# Improvement Area<u>, as shown in Appendix C of this Chapter,</u> adjacent to the #zoning lot# (and, as applicable, over such Improvement Area, as shown on Diagram 3 of Appendix C), are substantially complete (i.e., open to the public but for the work needed to complete the At-Grade Plaza Work). Notwithstanding the foregoing, in no event shall Owner be entitled to certification pursuant to Section 98-25, paragraph (b)(3), until the Chairperson determines that the At-Grade Plaza Work is substantially complete.

* * *

(4) City Performance of Work In the Event of Failure to Perform:

(i) In the event Owner has not completed any of the #High Line# Improvement Work (where an agreement for performance of such work has been executed under paragraph (a) of this Appendix, D, Structural Remediation Work (where Owner has exercised the option under paragraph (b)(1) of this Appendix), the At-Grade Plaza Work or Alternate Plaza Work, as applicable, and the Stairway and Elevator Access Work (where required to do so under paragraphs (b)(2) and (b)(3) of this Appendix), by a time at which the City has completed portions of the #High Line# (i.e., such that such portions are open and accessible to the public) immediately on either side of the #High Line# improvement area<u>, as shown in Appendix C of this Chapter,</u> for the #zoning lot#, as shown on Diagram 3 of Appendix C, and a relevant deadline for performance of such work under paragraphs (b)(1), (b)(2) or (b)(3) has passed, subject to the provisions of such sections relating to extension by mutual agreement or delay, the City, at its sole option, may, upon written notice to Owner, notify Owner of its intent to proceed with performance and/or completion of the relevant work at its own expense.

* * *

APPENDIX E

Special Regulations for Zoning Lots Utilizing the High Line Improvement Bonus and Located Partially Within Subareas D, E, G or I

This Appendix sets forth additional requirements governing #zoning lots# located partially within Subareas D, E and G or within Subarea I between West 16th and 17th Streets over which the #High Line# passes with respect to a #development# or #enlargement# which involves an increase in the applicable basic maximum #floor area ratio# of the #zoning lot# up to the amount specified in Section 98-22 (Maximum Floor Area Ratio and Lot Coverage in Subareas), with respect to: (1) the issuance of a building permit for such #development# or #enlargement# pursuant to paragraph (a) of Section 98-25 (High Line Improvement Bonus); and (2) the performance or funding of improvements as a condition of issuance of temporary or permanent certificates of occupancy pursuant to paragraph (c) of Section 98-25 for #floor area# in such #development# or #enlargement# which exceeds the basic maximum #floor area ratio# of the #zoning lot#. The term "parties in interest" as used herein shall mean "parties-in-interest," as defined in paragraph (f)(4) of the definition of #zoning lot# in Section 12-10.

(a) Requirements for Issuance of Building Permit Pursuant To Paragraph (a) of Section 98-25

* * *

(2) Upon the request of Owner, the City in its sole discretion, may elect to have Owner perform all #High Line# improvements (i.e., non-structural and non-remediation work) at its own expense within the #High Line# improvement area, as shown in Appendix C of this Chapter, on such #zoning lot # and over #streets# contiguous to such #zoning lot#. In that event, certification under Section 98-25, paragraph (a), shall also be made upon execution of an agreement, approved by the Chairperson of the City Planning Commission, to perform such improvements, the cost of which shall be refunded or credited from the #High Line# Improvement Fund contribution to reflect the cost of such improvements. Such agreement may require Owner to reimburse the City for the costs of a full-time resident engineer to supervise such work.

* * *

(b) Requirements for Issuance of Certificates of Occupancy Pursuant To Paragraph (c) of Section 98-25:

(1) Structural Remediation Work Pursuant To Paragraph (c)(2) of Section 98-25

(i) Owner may, at its option, elect to perform Structural Remediation Work on the portion of the #High Line# within the #High Line# improvement area, as shown in Appendix C of this Chapter, on such #zoning lot# and over #streets# contiguous thereto in accordance with the provisions of this paragraph. Owner may exercise such option following receipt of the City's specifications for the Structural Remediation Work or upon the City's failure to provide such specifications, as set forth in paragraphs (b)(1)(iv) and (b)(1)(v), (unless such dates are extended by mutual agreement of the City and Owner), but in no event may exercise such option later than 90 days following receipt of a notice by the City of its intent to commence improvements to the #High Line# within the #High Line# improvement area applicable to the #zoning lot# within the next twenty-four months. In that event, the amount of contribution to the #High Line# Improvement Fund shall be reduced by $21.00 for each square foot of #floor area# which exceeds the basic maximum #floor area ratio# of the #zoning lot# up to the amount specified in Section 98-22 and the City shall refund or credit the Owner, as applicable, for any excess from or against the #High Line# Improvement Fund. In the event of exercise of such option, certification pursuant to Section 98-25, paragraph (c)(2), with respect to the Structural Remediation Work shall be of substantial completion with respect to issuance of temporary certificates of occupancy, and of final completion with respect to issuance of final certificates of occupancy.

* * *

(2) Stairway and Elevator Access Work Pursuant To Paragraph (c)(3) of Section 98-25:

* * *

(iv) In no event however shall Owner be required to complete the Stairway and Elevator Access Work until the #High Line# improvements in the portion of the #High Line# improvement area, as shown in Appendix C of this Chapter, adjacent to the #zoning lot#, as shown on Diagram 4 or 5 of Appendix C, are substantially complete. Notwithstanding the foregoing, in no event shall Owner be entitled to certification pursuant to Section 98-25, paragraph (c)(3), until the Chairperson determines that the Stairway and Elevator Access Work is substantially complete.

(3) #High Line# Service Facility Work Pursuant To Paragraph (c)(4) of Section 98-25:

* * *

(iv) In no event however shall Owner be required to complete the #High Line# Facility Work until the #High Line# improvements in the portion of the #High Line# improvement area, as shown in Appendix C of this Chapter, adjacent to the #zoning lot#, as shown on Diagram 5 of Appendix C, are substantially complete. Notwithstanding the foregoing, in no event shall Owner be entitled to certification pursuant to Section 98-25, paragraph (c)(4), until the Chairperson determines that the Stairway and Elevator Access Work is substantially complete.

* * *

(c) City Performance in the Event of Failure to Perform

(1) In the event Owner has not completed any of the #High Line# Improvement Work (where an agreement for performance of such work has been executed under paragraph (a)(1) of this Appendix), Structural Remediation Work (where Owner has exercised the option under paragraph (b)(1) of this Appendix) and the Stairway and Elevator Access Work (under paragraph (b)(3), by a time at which the City has completed portions of the #High Line# (i.e., such that such portions are open and accessible to the public) immediately on either side of the #High Line# improvement area, as shown in Appendix C of this Chapter, for the #zoning lot#, as shown on Diagram 4 or 5 of Appendix C, and a relevant deadline for performance of such work under paragraphs (b)(1), (b)(2) or (b)(3) of this Appendix, as applicable, has passed, subject to the provisions of such paragraphs relating to extension by mutual agreement or delay, the City, at its sole option, may, upon written notice to Owner, notify Owner of its intent to proceed with performance and/or completion of the relevant work at its own expense.

* * *

Article IX - Special Purpose Districts
Chapter 9
Special Madison Avenue Preservation District

99-00
GENERAL PURPOSES

* * *

99-01
Definitions

Development

For purposes of this Chapter, a "development" includes the construction of a new #building or other structure# on a #zoning lot#, the relocation of an existing #building# on another #zoning lot#, and an #enlargement#. ~~However, the height and setback regulations of Section 99-05 shall only apply to the #enlarged# portion of a #building#.~~

Landmark building

A "landmark building" is any #building# designated as a landmark by the Landmarks Preservation Commission ~~and the Board of Estimate~~ pursuant to procedures set forth in ~~Section 534~~ Section 3020 of the New York City Charter and other applicable laws ~~and Chapter 8-A of the New York City Administrative Code~~.

~~Special Madison Avenue Preservation District~~
~~(repeated from Section 12-10)~~

~~The "Special Madison Avenue Preservation District" is a Special Purpose District designated by the letters "MP" in which special regulations set forth in Article IX, Chapter 9 apply to all #developments#. The #Special Madison Avenue Preservation District# and its regulations supplement or supersede those of the district on which it is superimposed.~~

* * *

99-03
Special Use Regulations

In order to retain the existing #residential# and retail character of the area, #commercial uses# shall occupy at least the first #story# that has a floor level within five feet of ~~above~~ #curb level#. Such #commercial uses# shall be limited to #uses# listed in Section 99-031 (Use Group MP). Notwithstanding the provisions of Article V, Chapter 2, #non-conforming uses# may only be changed to #uses# listed in Section 99-031 (Use Group MP). Such #commercial uses# shall occupy a minimum linear frontage of 75 percent of the frontage of a #zoning lot# on Madison Avenue, except that lots with a frontage of 100 feet or less on Madison Avenue may have a #commercial# frontage of less than 75 percent in order to provide a maximum 25 foot wide entrance to the #residential# portion of the #building#.

The mandatory #use# regulations of this Section may be modified for a #community facility# ~~#developments#~~ pursuant to the certification provisions of Section 99-032 (Modifications of use regulations for a #community facility# ~~development~~).

99-031
Use Group MP

Use Group MP comprises a group of #commercial# establishments selected to promote and strengthen the existing #commercial# character of the Special District. The #commercial uses# listed in Table A of this Section are permitted in any portion of the Special District located within a C1 District. The #commercial uses# listed in Tables A and B of this Section are permitted in any portion of the Special District located within a C5 District.

Table A

* * *

D. #Accessory uses#

* #Uses# marked with an asterisk (*), shall not be located ~~on the ground floor of a #building#~~ within #stories# that have a floor level within five feet of #curb level# unless such #use# is at least 50 feet from the #street wall# of the #building# in which it is located, and with no #show window# facing on the #street#.

** #Uses# in Use Group MP, marked with a double asterisk (**), are permitted only by special permit of the Board of Standards and Appeals pursuant to the provisions of Section 73-36.

99-032
Modifications of use regulations for a community facility ~~development~~

The mandatory #use# regulations of Section 99-03 (Special Use Regulations) may be modified for a #community facility# provided the City Planning Commission certifies that the treatment of the facade preserves and enhances street life on Madison Avenue compatible with the character of the surrounding area.

* * *

99-05
Special Height and Setback Regulations

* * *

99-051
Location, height and setback of street wall

(a) #Street walls# along Madison Avenue

For ~~#buildings developed# or #enlarged#~~ #developments# or #enlarged# portions of #buildings# with frontage on Madison Avenue or on a side #street# within 50 feet of its intersection with Madison Avenue, the following regulations shall apply:

* * *

(b) #Street walls# along side #streets#

For ~~#buildings developed# or #enlarged#~~ #developments# or #enlarged# portions of #buildings# with frontage on a side #street# beyond 50 feet of its intersection with Madison Avenue, the following regulations shall apply:

(1) The #street wall# of the base of such #building# shall be located on the #street line# or, if there is an existing abutting #building# fronting on the same #street line# that is set back from such #street line#, the #street wall# of the base shall be aligned with the #street wall# of the abutting #building# for a distance of not less

than 10 feet measured horizontally from the side wall of such abutting #building#. However, such setback distance need not exceed 10 feet from the #street line#. All #street walls# built pursuant to this paragraph shall extend along the full length of the #street line# and rise vertically without setback for:

(i) a height of 60 feet above #curb level#; or

(ii) the height of a #street wall# before setback, if applicable, of that portion of an existing #building# nearest the ~~new~~ #development# or #enlargement#, fronting on the same #street line#, and located on the same or an adjoining #zoning lot#;

whichever is higher.

* * *

99-052
Recesses, balconies and dormers

(a) Recesses

Recesses are permitted to provide #outer courts#, balconies or articulation of #street walls# at the intersection of two #street lines#. In addition, recesses may be required or prohibited due to the width of the #zoning lot# or the location of the #street wall# of an adjacent #building#. For the purposes of this Section, the provisions of Section 23-842 (Wide outer courts) shall not apply. In lieu thereof, the width of any such #court# shall be at least one and one-third times its depth. All recesses shall be provided in accordance with the following provisions:

(1) Above a height of 20 feet above #curb level#, or above the level of the second #story#, whichever is lower, up to 30 percent of the #street wall# of a base may be recessed from the #street line#. However, no recesses shall be permitted within 30 feet of the intersection of two #street lines#, unless such recesses are provided within an area bounded by the two #street lines# and a line connecting such #street lines# at points 15 feet from their intersection.

(2) Where the #development# <u>or #enlarged# portion of a #building#</u> is adjacent to an existing #building# located on a #zoning lot# having frontage on the same #street line#, no recesses shall be provided in the #street wall# of the #development# <u>or #enlargement#</u> for a distance of 10 feet from the adjacent corner of the existing #building# to a height equal to the height of the existing #building#.

* * *

99-053
Special provisions for narrow buildings

If the width of ~~the~~ <u>a</u> #street wall# ~~of a #development#,~~ built pursuant to Section 99-051 or 99-052, is 45 feet or less ~~or if the width of the #street wall# of an #enlargement# is 45 feet or less,~~ then ~~such #development# or #enlargement#~~ <u>the #building#</u> shall comply with the provisions of Section 23-692 (~~Additional regulations~~ <u>Height limitations</u> for narrow buildings or enlargements).

99-054
Maximum building height

The height of all ~~#developments# or #enlargements#~~ <u>#buildings or other structures#</u> shall comply with the following provisions:

(a) Except as otherwise provided in paragraph (b) of this Section, the height of all ~~#developments# or #enlargements#~~ #buildings or other structures# shall not exceed 170 feet above #curb level#. However, such ~~#developments# or #enlargements#~~ #buildings or other structures# may exceed 170 feet, to a height of 19 #stories# or 210 feet, whichever is less, provided that the gross area of each #story# located above 170 feet does not exceed 80 percent of the gross area of the #story# directly below it.

(b) For the purposes of this Section, the Midblock Transition Portion shall be that portion of a #zoning lot# located within the area between 70 feet and 100 feet from the Madison Avenue #street line#, except for a #zoning lot# which has frontage on a #wide street# not located in a historic district. Within the Midblock Transition Portion, a #building or other structure# shall not penetrate an imaginary plane that begins above a line 100 feet from the Madison Avenue #street line# at a height of 20 feet above the height of a #street wall# built pursuant to Section 99-051, paragraph (b), and rises over the Midblock Transition Portion to a height of 120 feet above #curb level# at a distance of 70 feet from the Madison Avenue #street line#.

99-06
Off-Street Parking Regulations

Where #accessory# off-street parking is provided, in no case shall curb cuts for vehicular access be located on Madison Avenue or on a #street# within 50 feet of its intersection with the #street line# of Madison Avenue. No off-site #accessory# off-street parking facilities for any #use# shall be permitted within the Special District.

The maximum number of permitted, and the minimum number of required, #accessory# off-street parking spaces for ~~new~~ #developments# or #enlargements# in the area of the Special District located within Community District 8 are set forth in Article I, Chapter 3.

99-07
Authorization to Waive Midblock Transition Portion Height Limitation

~~Where the #development# is located on a~~ For #zoning lots# in the Upper East Side Historic District, which #zoning lot# also contains a #landmark building# or #style building# to be preserved or, where a #zoning lot# is not located in the Upper East Side Historic District and the #zoning lot# contains a #building# to be preserved which the Landmarks Preservation Commission has designated as a landmark or certifies in a report by the staff or the Commission to be comparable to a #style building#, the City Planning Commission may authorize the waiver of the requirements of Section 99-054 (Maximum building height), paragraph (b), provided the City Planning Commission finds that:

(a) the #development# or #enlargement# complies with the goals and purposes of the #Special Madison Avenue Preservation District# as specified in Section 99-00 (GENERAL PURPOSES);

(b) the #development# or #enlargement# will not alter either the character of the neighborhood or the character sought to be achieved by the Special District;

(c) the #development# or #enlargement# will have a harmonious relationship with the #building# to be preserved; and

(d) the Landmarks Preservation Commission reports that a program for continued maintenance of the #building# to be preserved has been established.

Article X - Special Purpose Districts
Chapter 1
Special Downtown Brooklyn District

101-00
GENERAL PURPOSES

The "Special Downtown Brooklyn District" established in this Resolution is designed to promote and protect public health, safety and general welfare. These general goals include, among others, the following specific purposes:

(a) to strengthen the business core of Downtown Brooklyn by improving the working and living environments;

(b) to foster development in Downtown Brooklyn and provide direction and incentives for further growth where appropriate;

(c) to create and provide a transition between the Downtown commercial core and the lower-scale residential communities of Fort Greene, Boerum Hill, Cobble Hill and Brooklyn Heights;

(d) to encourage the design of new ~~development~~ buildings that is in character with the area;

(e) to preserve the historic architectural character of development along certain streets and avenues and the pedestrian orientation of ground floor uses, and thus safeguard the vitality of Downtown Brooklyn;

(f) to improve the quality of ~~new~~ development in Downtown Brooklyn by fostering the provision of specified public amenities in appropriate locations;

(g) to improve visual amenity by establishing special sign regulations within the Fulton Mall and Atlantic Avenue Subdistricts; and

(h) to promote the most desirable use of land and building development for Downtown Brooklyn and thus conserve the value of land and buildings and thereby protect the City's tax revenues.

101-01
Definitions

For purposes of this Chapter, matter in italics is defined in Section 12-10 (DEFINITIONS), Section 101-302 (Definitions Specific to the Atlantic Avenue Subdistrict) or in this Section.

Development or to develop

For purposes of this Chapter, a "development" includes ~~the construction of a new #building or other structure# on a #zoning lot#, the relocation of an existing #building# on another #zoning lot#, the #use# of a tract of land for a new #use#~~ #development# as defined in Section 12-10, an #enlargement# or an #extension#.

To "develop" is to create a #development#.

101-02
General Provisions

The provisions of this Chapter shall apply ~~to all #developments#, #enlargements#, #extensions#, alterations and changes of #use#~~ within the #Special Downtown Brooklyn District#. The regulations of all other Chapters of this Resolution are applicable, except as superseded,

supplemented or modified by the provisions of this Chapter. In the event of a conflict between the provisions of this Chapter and other regulations of this Resolution, the provisions of this Chapter shall control.

Whenever a #zoning lot# is divided by the boundary of the #Special Downtown Brooklyn District#, the requirements set forth in this Chapter shall apply, and shall apply only to that portion of the #zoning lot# within the #Special Downtown Brooklyn District#.

* * *

101-10
SPECIAL USE REGULATIONS

101-11
Special Ground Floor Use Regulations

Map 2 (Ground Floor Retail Frontage) in Appendix E of this Chapter specifies locations where the special ground floor #use# regulations of this Section apply.

#Uses# ~~located on the ground floor level or~~ within #stories# that have a floor level within five feet of #curb level#, and within 50 feet of the #street line#, shall be limited to #commercial uses# listed in Use Groups 5, 6A, 6C, 6D, 7A, 7B, 8A, 8B, 8D, 9, 10, 11, 12A, 12B and 12C, where such #uses# are permitted by the underlying district. In addition, libraries, museums and non-commercial art galleries shall be permitted. A #building's# #street# frontage shall be allocated exclusively to such #uses#, except for lobby space, entryways or entrances to subway stations. However, loading berths serving any permitted #use# in the #building# may occupy up to 40 feet of such #street# frontage provided such #street# frontage is not subject to curb cut restrictions as shown on Map 5 (Curb cut restrictions) in Appendix E of this Chapter.

In no event shall the length of #street# frontage occupied by lobby space or entryways exceed, in total, 30 feet or 50 percent of the #building's# total #street# frontage, whichever is less.

The regulations of this Section are modified as follows:

(a) Fulton Mall Subdistrict

For #buildings# in the Fulton Mall Subdistrict, Use Group 6A shall not include post offices, dry cleaning, laundry, or shoe and hat repair establishments. Use Group 6C shall not include automobile supply establishments, electrolysis studios, frozen food lockers, loan offices or locksmiths. Use Group 8A shall not include billiard parlors, pool halls, bowling alleys or model car hobby centers. Use Group 9 shall be prohibited except for typewriter stores. Use Group 10 shall not include depositories for office records, microfilm or computer tapes. Use Groups 6D, 7A, 7B, 8B, 8D, 11, 12A and 12C shall be prohibited. Furthermore, no bank or off-track betting establishment shall occupy more than 30 feet of frontage at the ground floor of any ~~#development#~~ #building# along the #street line# of Fulton Street. Any establishment that fronts on the #street line# of Fulton Street for a distance greater than 15 feet shall provide an entrance on Fulton Street.

(b) Atlantic Avenue Subdistrict

Automotive service stations are not permitted. No bank, loan office, business or professional office or individual #use# in Use Group 9 shall occupy more than 50 feet of linear frontage on Atlantic Avenue. Moving and storage uses in Use Group 7 are permitted on the ground floor of a #building# only if such #use# is located at least 50 feet from the front wall of the #building# in which the #use# is located. Any ~~new #development# or #enlargement#~~ #buildings developed# after June 28, 2004, or portions of #buildings enlarged# on the ground floor level after June 28, 2004 on a #zoning lot# of 3,500 square feet or more shall have a minimum of 50 percent of the ground #floor area# of the #building# devoted to permitted #commercial uses# in Use Groups 6, 7 or 9, except that this requirement shall not apply to any ~~new~~ #development# ~~or #enlargement#~~

occupied entirely by #community facility use#.

In any ~~#development# or #enlargement#~~ #building# within the Atlantic Avenue Subdistrict, the provisions of Section 32-421 (Limitation on floors occupied by non-residential uses) restricting the location of non-#residential uses# listed in Use Groups 6, 7, 8, 9 or 14 to below the level of the first #story# ceiling in any #building# occupied on one of its upper stories by #residential# or #community facility uses#, shall not apply. In lieu thereof, such non-#residential uses# shall not be located above the level of the second #story# ceiling.

101-12
Transparency Requirements

Map 3 (Ground Floor Transparency Requirements) in Appendix E of this Chapter specifies locations where the following transparency requirements apply.

For any ~~new #development# or #enlargement#~~ #buildings developed# after June 28, 2004, or portions of #buildings enlarged# on the ground floor level after June 28, 2004, each ground floor #street wall# shall be glazed with transparent materials which may include #show windows#, glazed transoms or glazed portions of doors. Such glazed area shall occupy at least 50 percent of the area of each such ground floor #street wall#, measured to a height of 10 feet above the level of the adjoining sidewalk. Where such glazed area is required to occupy at least 70 percent of the area of the ground floor #street wall#, up to 20 percent of the area of the ground floor #street wall# may be glazed with translucent materials. #Show windows# shall have a sill height not more than 2 feet, 6 inches above #curb level#.

For all locations specified on Map 3 in Appendix E of this Chapter, security gates installed after June 28, 2004, that are swung, drawn or lowered to secure #commercial# or #community facility# premises shall, when closed, permit visibility of at least 75 percent of the area covered by such gate when viewed from the #street#.

* * *

101-20
SPECIAL BULK REGULATIONS

101-21
Special Floor Area and Lot Coverage Regulations

R7-1
C5-4 C6-1 C6-4.5

* * *

(b) In C6-1 Districts

In C6-1 Districts, the #floor area ratio# and #open space ratio# provisions applicable to #residential buildings# and #residential# portions of #mixed buildings# pursuant to Sections 23-142, 23-143 and 23-144 shall not apply. In lieu thereof, the maximum #floor area ratio# for #residential buildings# or #residential# portions of #mixed buildings# shall be 3.44, except that for #non-profit residences for the elderly# the maximum #floor area ratio# shall be 5.01. The maximum #lot coverage# for #residential buildings# or #residential# portions of #mixed buildings# shall be 65 percent for #interior lots#, except that for #non-profit residences for the elderly# the maximum #lot coverage# for #interior lots# shall be 70 percent. For all #residential buildings# or #residential# portions of #mixed buildings#, the maximum #lot coverage# for #corner lots# shall be 80 percent. For ~~#buildings developed# or #enlarged# pursuant to the~~ #Quality Housing buildings# ~~Program~~, the underlying #floor area ratio# and #lot coverage# regulations shall apply.

* * *

101-211
Special permit for subway station improvements

Within the #Special Downtown Brooklyn District#, the City Planning Commission may grant, by special permit, a #floor area# bonus for #buildings# that provide subway station improvements, pursuant to the provisions of Section 74-634 (Subway station improvements in Downtown Brooklyn and in commercial zones of 10 FAR and above in Manhattan).

The total additional #floor area# permitted on the #zoning lot# shall not exceed 20 percent of the basic maximum #floor area ratio# permitted by the underlying district regulations.

For the purposes of the Special District, the #zoning lot# for the #development# ~~or #enlargement#~~ that will receive the #floor area# bonus shall be adjacent to a subway station where major improvements have been provided. Upon completion of the improvement, the #zoning lot# will physically adjoin a subway station mezzanine, platform, concourse or connecting passageway.

The subway stations where such improvements are permitted are listed in the following table and shown on Map 7 (Subway Station Improvement Areas) in Appendix E of this Chapter.

Station	Line
Borough Hall	~~Broadway-7th Ave. IRT~~ Eastern Parkway
Court Street~~.~~	~~Broadway BMT~~ Montague Street Tunnel
Dekalb Avenue~~.~~	~~6th Ave. IND~~ ~~Broadway BMT~~ 4th Avenue Brighton
Hoyt Street~~.~~	~~Broadway-7th Ave. IRT~~ ~~Lexington Ave. IRT~~ Eastern Parkway
Hoyt-Schermerhorn Street~~.~~	~~8th Ave. IND~~ ~~Brooklyn-Queens IND~~ Crosstown Fulton Street
Jay Street~~.~~-Borough Hall	~~6th Ave. IND~~ ~~8th Ave. IND~~ Culver Fulton Street
Lawrence Street~~.~~	~~Broadway BMT~~ Montague Street Tunnel
Nevins Street~~.~~	~~Broadway-7th Ave. IRT~~ ~~Lexington Ave. IRT~~ Eastern Parkway
Atlantic Avenue-Pacific Street~~.~~	~~Broadway BMT~~ 4th Avenue Brighton Eastern Parkway

101-22
Special Height and Setback Regulations

The height of all #buildings or other structures# shall be measured from the #base plane#. The provisions of Section 101-221 (Permitted Obstructions) shall apply to all #buildings# within the #Special Downtown Brooklyn District#.

In R7-1, C5-4, C6-1 and C6-4 Districts, except C6-1A Districts, the underlying height and setback regulations shall not apply. In lieu thereof, all ~~#developments# or #enlargements#~~ #buildings or other structures# shall comply with the provisions of Section 101-222 (Standard height and setback regulations) or, as an option where applicable, Section 101-223 (Tower regulations). ~~#Developments# or #enlargements#~~ #Buildings or other structures# within the Flatbush Avenue Extension and Schermerhorn Street Height Limitation Areas shall comply with the provisions of Section 101-30 (SPECIAL PROVISIONS WITHIN HEIGHT LIMITATION AREAS). However, the underlying height and setback regulations shall apply to any ~~#building developed# or #enlarged# pursuant to the~~ #Quality Housing building# ~~Program~~, except that the Quality Housing Program shall not be applicable within any R7-1 District mapped within a C2-4 District.

* * *

101-223
Tower regulations

C5-4 C6-1 C6-4

In the districts indicated, except C6-1A Districts, the provisions of this Section shall apply as an alternative to the provision of Section 101-222 (Standard height and setback regulations).

(a) Setback requirements for residential towers

For ~~#developments# or #enlargements#~~ #buildings# that contain #residential floor area# above a height of 85 feet, a setback is required for all portions of such #buildings# that exceed a height of 85 feet. Such portions of #buildings# shall be set back at least 10 feet from a #wide street line# and at least 15 feet from a #narrow street line#.

(b) Setback requirements for #commercial# or #community facility# towers

For ~~#developments# or #enlargements#~~ #buildings# that contain #commercial# or #community facility~~#~~floor area# above a height of 85 feet, a setback is required for all portions of such #buildings# that exceed a height of 85 feet.

For #zoning lots# that do not exceed a #lot area# of 15,000 square feet, such portions of #buildings# shall be set back at least 10 feet from a #wide street line# and at least 15 feet from a #narrow street line#. For #zoning lots# that exceed an area of 15,000 square feet, such portions shall be set back at least 20 feet from any #street line#.

However, setbacks shall not be required for any portion of a #building# fronting upon the south side of Willoughby Street between Gold Street and the Flatbush Avenue Extension, or upon that portion of the Flatbush Avenue Extension between Willoughby Street and DeKalb Avenue within 250 feet of Willoughby Street, provided that this exemption shall not be applicable to portions of #buildings# above 85 feet that contain #residential floor area#.

(c) Lot coverage requirements for towers

All ~~#developments# or #enlargements#~~ #buildings#, or portions thereof, shall have a maximum #lot coverage# of 65 percent of the #lot area# of the #zoning lot# above a height of 150 feet, up to a height of 300 feet. Above a height of 300 feet, all ~~#developments# or #enlargements#~~ #buildings#, or portions thereof, shall have a maximum #lot coverage# of 50 percent of the #lot area# of the #zoning lot#. However,

any ~~#developments# or #enlargements#~~ portion of a #building# containing #residential floor area# ~~shall have,~~ above a height of 150 feet~~,~~ shall have a maximum #lot coverage# of 40 percent of the #lot area# of the #zoning lot# or, for #zoning lots# less than 20,000 square feet, the percentage set forth in the table in this Section:

LOT COVERAGE OF TOWERS ON SMALL ZONING LOTS

Area of #Zoning Lot# (in sq. ft.)	Maximum Percentage of #Lot Coverage#
10,500 or less	50
10,501 to 11,500	49
11,501 to 12,500	48
12,501 to 13,500	47
13,501 to 14,500	46
14,501 to 15,500	45
15,501 to 16,500	44
16,501 to 17,500	43
17,501 to 18,500	42
18,501 to 19,999	41

(d) Maximum building height

In C6-1 Districts, the maximum height of a #building or other structure~~ developed# or #enlarged# pursuant to this Section~~ shall be 495 feet. No height limit shall apply within a C5-4 or C6-4 District.

101-30
SPECIAL PROVISIONS WITHIN HEIGHT LIMITATION AREAS

The provisions of this Section shall apply within the Flatbush Avenue Extension and Schermerhorn Street Height Limitation Areas, as shown on Map 6 in Appendix E of this Chapter.

* * *

(2) Height and setback regulations

The tower provisions of Section 101-223 shall not apply. The standard height and setback regulations of Section 101-222 shall apply within Area A of Map 6, and are modified to limit maximum building height to 140 feet within Area B, and to permit a maximum building height of 250 feet within Area C of Map 6. For ~~#buildings developed# or #enlarged# pursuant to the~~ #Quality Housing buildings# ~~Program~~, the underlying height and setback regulations shall apply, except that the maximum height of a #building# shall be as specified on Map 6 or as specified pursuant to the Quality Housing Program, whichever is less.

* * *

101-40
MANDATORY DISTRICT PLAN ELEMENTS

101-41
Special Street Wall Location Regulations

Map 4 (Street Wall Continuity and Mandatory Sidewalk Widenings) in Appendix E of this Chapter specifies locations where the special #street wall# location regulations of this Section apply. However, such regulations shall not apply along the #street# frontage of that portion of any #zoning lot# occupied by existing #buildings# to remain.

(a) Fulton Mall Subdistrict

Within the Fulton Mall Subdistrict, the #street wall# of any #building# shall be located on the #street line# and shall extend along the full length of the #street line# for that portion of the ~~#development#~~ #building# within the Subdistrict, except that on #corner lots#, no #street wall# shall be required within 100 feet of the intersection of two #street lines# where the interior angle formed by such intersecting #street lines# is 45 degrees or less. Such required #street walls# shall extend to a minimum height of 60 feet above #curb level# or the height of the #building#, whichever is less, and a maximum height of 85 feet. Above a height of 85 feet, the provisions of Section 101-222 (Standard height and setback regulations) or 101-223 (Tower regulations) shall apply.

(b) Atlantic Avenue Subdistrict

Within the Atlantic Avenue Subdistrict, the underlying height and setback regulations shall apply, except that the front wall of any ~~#development# or #enlargement#~~ #building# shall be coincident with the #street line# for a minimum height of 16 feet above #curb level# and, in a C2-4 District mapped within an R6A District, a maximum height of 50 feet above #curb level# or, in a C2-4 District mapped within an R7A District, a maximum height of 60 feet above #curb level#.

(c) Willoughby Square

For ~~#developments# or #enlargements#~~ #buildings# fronting upon Willoughby Square, at least 70 percent of the #street wall# of that portion of the #building# fronting upon Willoughby Square shall be located on the #street line# and extend to a minimum height of 80 feet and a maximum height of 85 feet. Above a height of 85 feet, the provisions of Section 101-223 shall apply.

(d) All other areas

On all other #streets# shown on Map 4, at least 70 percent of the #aggregate width of street walls# of any ~~#development# or #enlargement#~~ #building# shall be located within eight feet of the #street line# and extend to at least a height of 40 feet in R7-1 Districts mapped within C2-4 Districts and at least a height of 60 feet in all other districts, or the height of the #building#, whichever is less, except that on #corner lots#, no #street wall# shall be required within 100 feet of the intersection of two #street lines# where the interior angle formed by such intersecting #street lines# is 45 degrees or less.

101-42
Mandatory Sidewalk Widenings

Map 4 (Street Wall Continuity and Mandatory Sidewalk Widenings) in Appendix E of this Chapter specifies locations where the sidewalk widening regulations of this Section apply. Such regulations shall apply to all #developments# and to those horizontal #enlargements# where the #enlarged# portion of the #building# contains a #floor area ratio# of 3.0 or more.

All #buildings# that front upon the southerly #street line# of Willoughby Street between Adams Street and the Flatbush Avenue Extension shall provide a five foot deep sidewalk widening along the full frontage of the #zoning lot# along Willoughby Street. Such sidewalk widening shall be improved as a sidewalk to Department of Transportation standards, be at the same level as the adjoining public sidewalk and be accessible to the public at all times. For the purposes of applying the height and setback regulations of Section 101-22, inclusive, and the #street wall# location requirements of Section 101-41, the sidewalk widening line shall be considered to be the

#street line#.

101-43
Off-Street Relocation or Renovation of a Subway Stair

Where a #development# ~~or #enlargement#~~ is constructed on a #zoning lot# that contains at least 5,000 square feet of #lot area# and fronts on a sidewalk containing a stairway entrance or entrances into a subway station, the existing entrance or entrances shall be relocated from the #street# onto the #zoning lot#. For the purposes of this Section, a #development# shall not include an #extension#. The new entrance or entrances shall be provided in accordance with the provisions of Section 37-40 (OFF-STREET RELOCATION OR RENOVATION OF A SUBWAY STAIR). The subway stations where such improvements are required are listed in the following table and shown on Map 7 (Subway Station Improvement Areas) in Appendix E of this Chapter.

Station	Line
Court Street-Borough Hall	~~Broadway-7th Ave. IRT~~ Eastern Parkway Montague Street Tunnel
~~Court St.~~	~~Broadway BMT~~
DeKalb Avenue~~.~~	~~6th Ave. IND~~ ~~Broadway BMT~~ 4th Avenue Brighton
Hoyt Street~~.~~	~~Broadway-7th Ave. IRT~~ ~~Lexington Ave. IRT~~ Eastern Parkway
Hoyt-Schermerhorn Streets~~.~~	~~8th Ave. IND~~ ~~Brooklyn-Queens IND~~ Crosstown Fulton Street
Jay Street~~.~~-Borough Hall	~~6th Ave. IND~~ ~~8th Ave. IND~~ Culver Fulton Street
Lawrence Street~~.~~	~~Broadway BMT~~ Montague Street Tunnel
Nevins Street~~.~~	~~Broadway-7th Ave. IRT~~ ~~Lexington Ave. IRT~~ Eastern Parkway
Atlantic Avenue-Pacific Street~~.~~	~~Broadway BMT~~ 4th Avenue

* * *

101-612
Sign band

(a) #Sign# located within the #sign# band

A #commercial# establishment located on the ground floor of a #building# may have one #sign# located on each #street# frontage within a #sign# band as defined in this Section.

* * *

If more than one #commercial# establishment is located on the ground floor of a #building#, the #signs# located within the #sign# band #accessory# to each such establishment shall consist of letters and symbols of approximately the same size for each establishment, either applied directly to the surface of the #building# or to a common #sign# board affixed to the surface of a #building#.

* * *

(b) #Signs# located below the #sign# band

#Signs accessory# to #commercial# establishments located on the ground floor of a #building# may be located between #curb level# and 10 feet, 0 inches above #curb level#. #Signs# in #show windows#, on doors, or on transoms above doors shall not occupy more than 20 percent of the total area of such #show windows#, doors or transoms above doors in which they are displayed, and are limited to writing (including letter, word or numeral) not more than eight inches high. Such #sign# shall be applied directly to #show windows#, doors or transoms above doors, without background, or to a transparent panel hung behind the plane of the #show window# surface, door or transom above a door. Non-flashing #illuminated signs# (such as neon, etc.) shall be permitted providing that such #signs# are essentially transparent, i.e., without background or enclosure.

Incidental #signs#, identifying store name, address and hours of operation shall not exceed ten square feet (including background) for an individual #sign# and shall not exceed, in aggregate (square feet), one-fifth the #street# frontage of the establishment but in no event more than 50 square feet for #interior# or #through lots# or 50 square feet on each frontage for #corner lots#.

An establishment located above the ground floor of a #building# that has an entrance on the ground floor may have one #sign# directing attention to the entrance.

(c) #Signs# located above the #sign# band

#Signs accessory# to #commercial# establishments which occupy space above the ground floor of a #building# may be located between 20 feet, 0 inches and 40 feet, 0 inches above #curb level#. Such establishments may have #signs# in windows provided that such #sign# does not occupy more than 30 percent of the window to which it is applied, that the remainder of the window is transparent, and that all such #signs# for an establishment have similar size and style of writing, pictorial representation, emblem or any other figure of similar character. #Commercial# establishments which occupy space above the ground floor may have one #sign# located above the #sign# band which is applied directly to the surface of a #building# or to a #sign# board affixed to the surface of a #building#. If a #sign# board is employed, such #sign# board shall be mounted horizontally, shall have a uniform color over its entire surface, excluding perimeter frame and trim, and shall not be located between windows. The total #surface area# of all #signs# located above the #sign# band shall not exceed three times the #street# frontage of the #zoning lot# (in feet) but in no event more than 200 square feet on each frontage.

No #sign# or #sign# board shall extend above the parapet wall or shall obscure any cornice or window.

* * *

101-712
Area of non-illuminated signs

The total #surface area# (in square feet) of non-#illuminated signs# on a #zoning lot# shall not exceed three times the #street# frontage of the #zoning lot# (in feet), and in no event shall exceed 150 square feet for #interior# or #through lots# or 150 square feet on each frontage for #corner lots#. Each #commercial# establishment shall be permitted not more than one #sign#. The vertical dimension of any #sign# shall not exceed 3 feet, 0 inches. The provisions of this Section shall not apply to projecting #signs# that comply with the provisions of Section 101-131 (Permitted projection).

* * *

101-721
Height and setback

The underlying height and setback regulations shall apply, except that the front wall of any ~~#development# or #enlargement#~~ #building# shall be coincident with the #street line# for a minimum height above #curb level# of 16 feet and, in a C2-4 District mapped within an R6A District, a maximum height above #curb level# of 50 feet or, in a C2-4 District mapped within an R7A District, a maximum height above #curb level# of 60 feet.

101-73
Special Provisions

101-731
Special provisions for certain existing buildings

Any alteration, #incidental alteration# or minor work (including any change in, addition to or removal from the parts or materials of a #building#, including finishes) done to the front wall of any #building# of the #specified building type# shall comply with the following standards:

(a) Alteration or reconstruction of storefronts shall comply with the provisions of Section 101-734.

(b) Front walls which are replaced shall be erected to the same height and at the same location as the original walls. Replacement or repair of front walls shall be done with the same material as the original walls, except that stone may be replaced by another material finished in such a manner as to match the appearance of the original walls. Finishes and colors of front walls shall be of an approved type, as indicated in Appendix C of this Chapter.

(c) Front walls which are replaced shall have windows at each floor, the area of which shall comply with the provisions of Section 101-733 (Special provisions for ~~new~~ development and enlargement). Such windows shall have stone or precast lintels and sills having a minimum height of six inches and extending at least four inches beyond the window opening on either side. Existing window openings above the ground floor may not be reduced in size but may be completely sealed if the window area provisions of Section 101-733 are met. Such openings shall be completely sealed with masonry recessed at least two inches behind the wall and finished to match the wall. New windows shall be double-hung, fixed or casement sash finished in an approved manner, as indicated in Appendix D of this Chapter.

(d) No existing cornice shall be removed unless required by the Department of Buildings. A cornice that must be removed shall be replaced by a new cornice having the same height, length and projection beyond the surface of the wall and finished in an approved color, as indicated in Appendix D of this Chapter.

101-732
Special provisions for other existing buildings

Any alteration, #incidental alteration# or minor work done to the front wall of any #building# not of the #specified building type#, shall comply with the following standards:

(a) alteration or replacement of storefronts shall comply with the provisions of Section 101-734; and

(b) alteration or replacement of front walls shall comply with the provisions of Sections 101-721 (Height and setback) and 101-733 (Special provisions for ~~new~~ development and enlargement).

101-733
Special provisions for ~~new~~ development and enlargement

The front wall of any ~~new~~ #development# or #enlargement#, or the front wall of any #building# where the height or width of a #street wall# is proposed to be increased, shall be built to comply with the following standards:

* * *

101-734
Special provisions for storefronts

No storefront of the #specified storefront type# shall be demolished unless its demolition is required by the Department of Buildings. Reconstruction or repair of storefronts of the #specified storefront type# shall be done in such a manner as to retain or restore the original design and materials, except that plate glass may be replaced by transparent plastic. Such storefronts shall be finished in an approved manner, as indicated in Appendix D of this Chapter.

~~In addition to the transparency requirements of Section 101-12, new~~ New storefronts installed in any existing or new #building# shall comply with Section 101-12 (Transparency Requirements) and the following standards:

* * *

101-74
Modification of Accessory Off-Street Parking and Loading Requirements

101-741
Accessory off-street parking

No #accessory# off-street parking facilities are required for any #residential# or #commercial-#development# ~~or #enlargement#~~, or portion thereof, within the Atlantic Avenue Subdistrict. In no case shall the number of permitted #accessory# off-street parking spaces for #residential use# exceed 40 percent of the number of #dwelling units#. All #accessory# parking spaces shall be designed and operated exclusively for the long term storage of private passenger motor vehicles used by the occupants of such #residences#.

In no case shall curb cuts for vehicular access be located on Atlantic Avenue or on a #street# within 50 feet of its intersection with the #street line# of Atlantic Avenue. No off-site #accessory# off-street parking facilities for any #use# shall be permitted within the Atlantic Avenue Subdistrict.

The parking requirements set forth in Section 25-31 or 36-21 shall not apply to any #development# ~~or #enlargement#~~ for which the Commissioner of Buildings has certified that there is no way to provide the required parking spaces with access to a #street# in conformity with the provisions of this Section.

* * *

101-743
Accessory off-street loading

Curb cuts for vehicular access to #accessory# off-street loading berths shall not be located on Atlantic Avenue or on a #street# within 50 feet of its intersection with the #street line# of Atlantic Avenue. However, the City Planning Commission may, by authorization, permit a curb cut on Atlantic Avenue, provided that:

(a) such curb cut is a relocation of an exiting curb cut on the #zoning lot#; and

(b) such curb cut will not unduly inhibit surface traffic and pedestrian flow along Atlantic Avenue.

The loading berth requirements of Section 25-72 or 36-62 shall not apply to any #development# ~~or #enlargement#~~ for which the Commissioner of Buildings has certified that there is no way to provide the required loading berths with access to a #street# in conformity with the provisions of this Section.

All #accessory# off-street loading berths shall be enclosed within a #building#.

101-744
Special permit for public parking garages or public parking lots

The City Planning Commission may grant a special permit for #public parking garages# or #public parking lots# with a capacity of not more than 100 spaces, provided that the regulations set forth in Sections 36-53 (Width of Curb Cuts and Location of Access to the Street), 36-55 (Surfacing) and 36-56 (Screening), are met and that no roof parking is permitted. The Commission may permit floor space on one or more #stories#, and up to a height of 23 feet above #curb level#, to be exempted from the definition of #floor area# set forth in Section 12-10 (DEFINITIONS). As a condition of permitting such #use#, the Commission shall make the following findings:

(a) such #use# is so located as to draw a minimum of vehicular traffic to and through local #streets# in nearby ~~#residential#~~ residential areas;

(b) such #use# has adequate reservoir space at the vehicular entrance to accommodate a minimum of 10 automobiles or 20 percent of the spaces so provided, whichever amount is less; and

(c) where any floor space is exempted from the definition of #floor area#, such additional floor space is needed in order to prevent excessive on-street parking demand and relieve traffic congestion.

101-75
Special Provisions for Demolition of Buildings

Except in the case of #buildings# that are unsafe and the demolition of which is required pursuant to the provisions of Chapter 26, Title C, Part I, Article 8, or its successor, of the New York City Administrative Code, no demolition permit shall be issued by the Department of Buildings for any #development# ~~or #enlargement#~~ within the Special District until:

(a) the owner of the property has obtained a building permit for the new #development# or #enlargement#; and

(b) the owner shall have presented evidence of having a commitment from a domestic bank, insurance company or real estate investment company for construction financing, which shall be in the form of a letter trust.

* * *

Appendix C
Atlantic Avenue Subdistrict: Permitted Wall Finishes for Street Walls

Brick: New brick shall be red or dark brown, unglazed, with normal variation in color permitted. Existing brick shall either be cleaned and left unfinished or painted one of the colors listed below.

Stucco: Stucco shall have a smooth troweled finish and shall be painted one of the colors listed below.

Stone: Stone shall be left natural or painted one of the colors listed below.

Paint Colors

Paints shall be limited to the colors listed. ~~Specific brands of paint are listed only as examples of proper colors; paints of any manufacture may be used if they match the sample paints in hue and intensity.~~

White Limestone ~~- similar to Luminall "S226 Limestone" or Moorgard "16-14 Limestone Gray"~~

Brownstone ~~- similar to Luminall "S227 Brownstone" or Dutch Boy "17-34 Rustic Brown"~~

Red Brick ~~- Similar to Moortone "026-21 Red Brick" or Luminall "S210 Brick Red"~~

Green ~~- similar to Lucite "1300c Live Oak Green," Moorgard "103- 45 Provincial Sage" or Dutch Boy "17-86 Lexington Green"~~

Blue ~~- similar to Moorgard "8-72 Newport Blue"~~

Light Yellow ~~- similar to Lucite "1317c Colonial Gold" or Moorgard "103-10 Colonial Yellow"~~

Dark Yellow ~~- similar to Lucite "1319c Salem Gold," Moorgard "18-16 Salem Gold" or Dutch Boy "17-48 Golden Eagle"~~

Appendix D
Atlantic Avenue Subdistrict: Permitted Trim Finishes (for storefronts, cornices, window sash, shutters or trim)

Wood: All wood should be painted one or more of the colors listed below.

Metal: All metal should be painted one or more of the colors listed below, except that aluminum may have a dark bronze or black duranodic finish.

Paint Colors
Paints shall be limited to the colors listed, and should be of the semi-gloss low luster variety. ~~Specific brands of paint are listed only as examples of proper colors; paints of any manufacture may be used if they match the sample paints in hue and intensity.~~

White Cream ~~- similar to Red Devil "24 Bone White" or Moorgard "103-18 Ivory"~~

Dark Red ~~- similar to Red Devil "29 Red" or Lucite "1807c Autumn Red"~~

Ochre ~~- similar to Lucite "1804c Antique Gold" or Moorgard "103-13 Harvest Gold"~~

Dark Blue ~~- similar to Lucite "1803c Raven Green," Red Devil "25 Wintergreen" or Moorgard "103-44 Forest Green"~~

Dark Brown ~~- similar to Lucite "1808c Nutmeg," Moorgard "103-60 Manor Brown" or Red Devil "14 Walnut"~~

Appendix E
Special Downtown Brooklyn District Maps

* * *

Map 7 Subway Station Improvement Areas

Article X - Special Purpose Districts
Chapter 2
Special Scenic View District

* * *

102-01
Definitions

Definitions specially applicable to this Chapter are set forth in this Section. The definitions of other defined terms are as set forth in Section 12-10 (DEFINITIONS).

Scenic view

A "scenic view" is an outstanding or unique view from a mapped #public park# or an esplanade or a mapped public place which is protected by the regulations of this Chapter. #Scenic views# shall be limited to:

(a) distant landscapes of scenic grandeur which contain natural features such as hills, palisades or similar features;

(b) outstanding views of large bodies of water such as rivers, streams, lakes, harbors, waterfalls or similar aquatic features; or

(c) panoramic views of the waterfront profile of the skyline formed by built and natural elements.

The minimum horizontal distance between the #scenic view# and a #view reference line# shall be at least 1,500 feet and shall not contain distractions which reduce the quality of such view. The specific view to be preserved under the regulation of this #Special Scenic View District# shall be described and made part of this Chapter.

~~Special Scenic View District~~
~~(repeated from Section 12-10)~~

~~The "Special Scenic View District" is a Special Purpose District designated by the letters "SV", in which special regulations set forth in this Chapter apply to all #developments#, #enlargements# and #signs#. Each #Special Scenic View District# shall appear on the #zoning maps# superimposed on other districts, when designated, and its regulations supplement or modify those of the districts on which it is superimposed. The #Special Scenic View District# is that portion of the area, as specified in Section 102-60, beneath a #view plane# where the regulations of this Chapter shall apply. The #Special Scenic View District# includes any district whose designation begins with the letters "SV". The boundaries of each #Special Scenic View District# shall be described and made part of this Chapter.~~

~~#Special Scenic View Districts# may be mapped only in areas where the control of the height of a #building or other structure# or #signs# is necessary to preserve outstanding #scenic views# from a mapped #public park# or an esplanade or a mapped public place.~~

* * *

102-02
General Provisions

In harmony with the general purpose and intent of this Resolution and the general purposes of the #Special Scenic View District#, the regulations of the districts upon which this Special District is superimposed are supplemented or modified in accordance with the provisions of this Chapter. Except as so modified, ~~each #development# or #enlargement# within a Special District shall be subject to~~ all the applicable regulations of the underlying districts shall be in effect.

#Special Scenic View Districts# may be mapped only in areas where the control of the height of a #building or other structure#, including #signs#, is necessary to preserve outstanding #scenic views# from a mapped #public park# or an esplanade or a mapped public place.

102-021
Requirement for application

An application to the City Planning Commission for a special permit ~~respecting any #development#, or #enlargement#~~, pursuant to Section 102-30 ~~within the Special District~~, shall include maps, plans or other documents showing topography, elevations, and site plans showing arrangement and spacing of #buildings or other structures#, and other information necessary to determine the impact of ~~this #development#~~ the proposal on the #scenic view# to be protected.

102-023
Relationship to public improvement projects

In all cases, the City Planning Commission shall deny a special permit application whenever the ~~#development#~~ proposal will interfere with a public improvement project (including highways, public #buildings# and facilities), redevelopment or renewal projects, or rights-of-way for sewers, transit, or other public facilities) which is approved by or pending before the Board of Estimate, the City Planning Commission, or the Site Selection Board as determined from the calendar of each such agency issued prior to the date of the public hearing on the application for a special permit.

102-10
HEIGHT REGULATIONS FOR BUILDINGS, SIGNS OR STRUCTURES

Notwithstanding any other provisions of this Resolution, ~~the highest projection~~ no portion of any #building or other structure# hereafter constructed, or of any #sign# hereafter erected, or of any existing #building or other structure# hereafter relocated, #enlarged# or reconstructed, shall ~~not~~ penetrate a #view plane# unless authorized by the City Planning Commission pursuant to Section 102-30 (SPECIAL PERMIT PROVISIONS).

* * *

102-30
SPECIAL PERMIT PROVISIONS

On all #zoning lots# located entirely or partially within a #Special Scenic View District#, the City Planning Commission, by special permit, may allow penetration by a #sign# or #building or other structure# of a #view plane#; ~~allow, in R1 and R2 Districts, #attached# and #semi-attached detached# #single-family residences#; and allow, in R3-1 Districts, #attached# #single-family# or #two-family residences#;~~ and grant minor modifications of #open space#, #lot coverage#, #yards# and height and setback regulations of the underlying district. As a condition for such modifications, the Commission shall find:

(a) that any penetration of a #view plane# shall not significantly obstruct the #scenic view# which is to be protected by the provisions of this Chapter;

(b) that any penetration of a #view plane# will cause the minimal obstruction consistent with reasonable ~~#development#~~ development and #bulk# distribution on the #zoning lot#; and

(c) that any ~~#use# and~~ #bulk# modifications on a #zoning lot# will not affect adversely any other #zoning lots# outside the ~~#development#~~ development, by restricting access of light and air.

In reaching a determination for such modifications, the Commission shall be guided by the

description of the #scenic view# to be made part of this Chapter at the time of the designation of a #Special Scenic View District#.

The Commission may prescribe appropriate conditions and safeguards to protect the #scenic view# and to minimize the adverse effects on the character of the surrounding areas.

* * *

Article X - Special Purpose Districts
Chapter 3
Special Planned Community Preservation District

* * *

103-01
Establishment of Special Planned Community Preservation District

The City Planning Commission has established the #Special Planned Community Preservation District# in areas that:

(a) have a land area of at least 1.5 acres;

(b) contain a minimum of three #buildings#;

(c) were designed and substantially #developed# as a unit under the regulations of the Zoning Resolution prior to December 15, 1961; and

(d) include considerable clustered #open space# and related #commercial uses# available to all residents of the District.

The Commission has found that existing site plans resulted in superior functional relationships of #buildings#, #open spaces#, pedestrian and vehicular circulation systems, including parking facilities, and other amenities all together creating an outstanding planned ~~#residential#~~ residential community.

* * *

103-10
GENERAL PROVISIONS

In harmony with the general purpose and intent of this Resolution and the general purposes of the #Special Planned Community Preservation District#, no ~~new~~ #development#, #enlargement#, ~~which may include demolition of #buildings#~~, or substantial alteration of landscaping or topography, shall be permitted within the Fresh Meadows, Harlem River Houses and Parkchester areas, except by special permit of the City Planning Commission, pursuant to Sections 103-11 (Special Permits for Bulk and Parking Modifications) and 103-12 (Special Permit for Landscaping and Topography Modifications). No demolition of #buildings# shall be permitted within the Fresh Meadows, Harlem River Houses and Parkchester areas, unless it is an unsafe #building# and demolition is required pursuant to the provisions of Chapter 26, Title C, Part I, Article 8, of the New York City Administrative Code, or its successor, except that such demolition may be permitted pursuant to a development plan for which a special permit has been granted under the provisions of Section 103-11 (Special Permits for Bulk and Parking Modifications) and Section 103-12 (Special Permit for Landscaping and Topography Modifications).

Special regulations for the Sunnyside Gardens area are set forth in Section 103-20, inclusive.

103-11
Special Permits for Bulk and Parking Modifications

(a) For any ~~new~~ #development#, or #enlargement#, either of which may include demolition, within a #Special Planned Community Preservation District#, the City Planning Commission, by special permit, may allow:

(1) the unused total #floor area#, #dwelling units# or #rooming units# permitted by the applicable district regulations for all #zoning lots# within the ~~#development#~~ development to be distributed without regard for #zoning lot lines#;

(2) the total #open space# or #lot coverage# required by the applicable district regulations for any #zoning lots# within the ~~#development#~~ development to be distributed without regard for #zoning lot lines#;

(3) minor variations in the #yard# regulations required by the applicable district regulations;

(4) minor variations in the height and setback regulations required by the applicable district regulations;

(5) modifications of the minimum spacing requirements consistent with the intent of the provisions of Section 23-71 (Minimum Distance Between Buildings on a Single Lot); or

(6) permitted or required #accessory# off-street parking spaces, driveways or curb cuts to be located anywhere within the ~~#development#~~ development, without regard to #zoning lot lines# or the provisions of Sections 25-621 (Location of parking spaces in certain districts) and 25-631 (Location and width of curb cuts in certain districts), subject to the findings of Section 78-41 (Location of Accessory Parking Spaces).

(b) In order to grant such special permits, the City Planning Commission shall make the following findings:

(1) that the ~~new~~ #development# or #enlargement# relates to the existing #buildings or other structures# in scale and design, and that the ~~new~~ #development# will not seriously alter the scenic amenity and the environmental quality of the community;

(2) that the ~~new~~ #development# or #enlargement# be sited in such a manner as to preserve the greatest amount of #open space# and landscaping that presently exists, consistent with the scale and design of the existing ~~#development#~~ development, the landscaping surrounding the new landscaping arrangement, and conditions of the community;

(3) that the ~~new~~ #development# or #enlargement# be sited in such a manner that it will not require at that time, or in the foreseeable future, new access roads or exits, off-street parking or public parking facilities that will disrupt or eliminate major portions of #open space# and landscaping or will generate large volumes of traffic that will diminish the environmental quality of the community; and

(4) that minimal landscaping be removed during construction and such areas will be fully restored upon completion of construction.

(c) Notwithstanding the provisions of paragraph (a)(6) of this Section, where the requirement for #accessory# off-street parking spaces, driveways or curb cuts can only be accommodated in such a manner that the functioning of the existing planned community is substantially injured, the City Planning Commission shall authorize waiver of all or part of the required parking.

~~(d) No demolition permit shall be issued by the Department of Buildings for any #building# within the Special District after July 18, 1974, unless it is an unsafe #building# and demolition is required pursuant to the provisions of Chapter 26, Title C, Part I, Article 8, of the New York City Administrative Code, or its successor, except pursuant to a #development# plan for which a special permit has been granted under the provisions of this Section and Section 103-12.~~

The City Planning Commission may prescribe appropriate conditions and safeguards, including covenants running with the land which shall permit public or private enforcement reflecting terms, conditions and limitations of any special permit in order to minimize adverse effects on the character and quality of the community. The Commission may advise and recommend special

conditions or modifications in the plans submitted by applicants in order to conform to the intentions of the #Special Planned Community Preservation District#.

* * *

103-13
Requirements for Application

An application to the City Planning Commission for the grant of a special permit respecting any #development# or #enlargement# or substantial modification of landscaping or topography to be made within the Special District, shall include the existing and proposed site plan showing the location and the scale of the existing and proposed #buildings or other structures#, the location of all vehicular entrances and exits and off-street parking facilities, the changes that will be made in the location and size of the #open space#, and such other information as may be required by the Commission. The submission shall include a landscaping plan, #building# sections and elevation and an appropriate model of the planned community.

103-14
Recordation

At the time of any transfer of development rights which has been authorized by special permit under Section 103-11, the owners of #zoning lots# to which and from which development rights are transferred shall submit to the City Planning Commission a copy of the transfer instrument legally sufficient in both form and content to effect such a transfer.

Notice of the restrictions upon further ~~#development#~~ development of the lots to which development rights and from which development rights are transferred shall be filed by the owners of the respective lots in the place and county designated by law for the filing of deeds and restrictions on real property, a certified copy of which shall be submitted to the Commission.

Both the instrument of transfer and the notice of restrictions shall specify the total amount of #floor area# to be transferred, and shall specify, by lot and #block# numbers, the lots from which and the lots to which such transfer is made.

* * *

103-21
Special Bulk Regulations

Notwithstanding any other provisions of this Resolution, #bulk# regulations applicable to the underlying ~~#Residential#~~ #Residence# and #Commercial Districts# or modified within the Special District are hereby further modified to the extent set forth in this Section, inclusive.

103-211
Special floor area regulations

In the Sunnyside Gardens area of the Special District, the #floor area# regulations of the underlying ~~#Residential#~~ #Residence# and #Commercial Districts# shall not apply. In lieu thereof, the maximum #floor area ratio# permitted for #residential#, #commercial# and #community facility uses#, separately or in combination, shall be 0.75, which may be increased by up to 20 percent to a maximum #floor area ratio# of 0.9, provided that any such increase in #floor area# is located under a sloping roof which rises at least three and one half inches in vertical distance for each foot of horizontal distance, and the structural headroom of such #floor area# is between five and eight feet.

103-212
Special density regulations

In the Sunnyside Gardens area of the Special District, the density regulations of the underlying ~~#Residential#~~ #Residence# and #Commercial Districts# shall not apply. In lieu thereof, ~~for all #residential developments# or #enlargements#,~~ the density factor for #dwelling units# shall be 900.

103-213
Special height regulations

In the Sunnyside Gardens area of the Special District, the height and setback regulations for R4 Districts as set forth in Article II, Chapter 3, shall apply ~~to all #developments# or #enlargements#~~ in ~~#Residential#~~ #Residence# and #Commercial Districts#.

103-214
Special yard regulations

In the Sunnyside Gardens area of the Special District, the #yard# regulations for R4 Districts as set forth in Article II, Chapter 3, shall apply ~~to all #developments# or #enlargements#~~ in ~~#Residential#~~ #Residence# and #Commercial Districts#

* * *

Article X - Special Purpose Districts
Chapter 4
Special Manhattanville Mixed Use District

* * *

104-02
General Provisions

In harmony with the general purposes and content of this Resolution and the general purposes of the #Special Manhattanville Mixed Use District#, the regulations of this Chapter shall apply ~~to all #developments#, #enlargements#, #extensions#, alterations and changes of #use#~~ within the Special District. The regulations of all other Chapters of this Resolution are applicable, except as superseded, supplemented or modified by the provisions of this Chapter. In the event of a conflict between the provisions of this Chapter and other regulations of this Resolution, the provisions of this Chapter shall control.

* * *

104-11
Residential Use Modifications

The #residential use# regulations of the underlying C6-1 District are modified, as follows.

In Subdistrict A, a #residential use# may locate in the same #building#, or ~~share a common wall with~~ #abut#~~,~~ a #building# containing a #use# listed in Section 104-132 (Use Groups 16, 17 and 18) only in accordance with the certification provisions of Section 104-14.

104-12
Community Facility Use Modifications

The #community facility use# regulations of the underlying C6-1 and M1-2 Districts are modified, as follows:

(a) in Subdistrict A, a #community facility use# with sleeping accommodations, as listed in this Section, may locate in the same #building#, or ~~share a common wall with~~ #abut#, a #building# containing a #use# listed in Section 104-132 (Use Groups 16, 17 and 18), only in accordance with the certification provisions of Section 104-14:

* * *

104-132
Use Groups 16, 17 and 18

In Subdistricts A and C, the following #uses# in Use Groups 16, 17 and 18 are permitted, subject to the performance standards for an M1 District set forth in Section 42-20 (PERFORMANCE STANDARDS).

Such #uses# may locate in the same #building#, or ~~share a common wall with,~~ #abut# a #building# containing a #residential use# or a #community facility use# with sleeping accommodations listed in Section 104-12 (Community Facility Use Modifications), only in accordance with the certification provisions of Section 104-14.

* * *

104-14
Certification Requirements

In Subdistrict A, a #use# listed in Section 104-132 (Use Groups 16, 17 and 18) and a #residential use# or a #community facility use# with sleeping accommodations listed in Section 104-12 (Community Facility Use Modifications) may locate in the same #building# or ~~share a common~~

~~building wall~~ in an #abutting building# only upon certification by a licensed architect or a professional engineer to the Department of Buildings stating that the #commercial# or #manufacturing use#:

* * *

104-20
SPECIAL BULK REGULATIONS

In Subdistricts A, B and C, the #bulk# regulations of the underlying C6 and M1 Districts, as modified in this Chapter, shall apply ~~to any #development#, #enlargement# or change of #use#, pursuant to Section 104-26 (Change of Use)~~.

* * *

104-25
Maximum Floor Area Ratio for ~~Mixed Buildings~~ Multiple Uses on a Zoning Lot

When more than one #use# is located on a #zoning lot#, the maximum #floor area ratio# permitted for any #use# on such #zoning lot# shall not exceed the maximum permitted for such #use# as set forth in Sections 104-21 through 104-24, inclusive, provided that the total of all such #floor area ratios# does not exceed the greatest #floor area ratio# permitted for any such #use# on the #zoning lot#.

104-26
Change of Use

(a) Change to #residential use#

Notwithstanding the provisions set forth in Section 34-222 (Change of use) and in the last paragraph of Section 35-31 (Maximum Floor Area Ratio ~~for Mixed Buildings~~) regarding the applicability of #floor area ratio# and #open space ratio# regulations to a change from a non-#residential use# to a #residential use# in a #building# in existence on December 15, 1961, such #conversions# of #non- ~~#~~ residential buildings# shall be permitted only if such #buildings# comply with all of the #bulk# regulations for #residential# or #mixed buildings#.

* * *

104-31
Maximum Building Height

In Subdistrict A, the maximum #building# height, by Parcel, is shown on Map 5 (Parcel Designation and Maximum Building Heights) in Appendix A of this Chapter and specified in Appendix B of this Chapter. In Subdistricts B, C and the Other Area east of Broadway, the maximum #building# heights are shown on Map 5. No #building# shall exceed the maximum #building# height set forth in such Map or Appendix B of this Chapter.

* * *

104-321
Mechanical equipment

Mechanical equipment, open or enclosed, may be located on the roof of a #building# in accordance with the following provisions:

(a) Mechanical equipment shall not exceed the maximum height of mechanical equipment specified for each Parcel as set forth in Appendix B of this Chapter and shall be measured from the roof level of the highest #story# of the #building#. Such mechanical equipment may penetrate the maximum #building# height specified for each Parcel as set forth in Appendix B.

(b) Such mechanical equipment shall be set back at least 10 feet from the #upper street wall# of the #building#. In addition, such equipment shall not penetrate a #sky exposure plane# that begins at the point of intersection of the roof and the #upper street wall# of the #building#, and rises over the #building# at a slope of 2.7 feet of vertical distance for each foot of horizontal distance, except for permitted obstructions set forth in Section 104-322. Where portions of the #upper street wall# are located at different distances from the #street line# or #mandatory widened sidewalk line#, whichever is applicable, the portion used to establish such reference line shall be the portion that occupies the greatest area of such #upper street wall#.

(c) Such mechanical equipment shall not overhang any recess in the #building# wall that is open to the sky.

104-322
Permitted Obstructions

The following shall not be considered obstructions and thus may penetrate the applicable maximum #building# height and the applicable maximum height for mechanical equipment set forth in Appendix B of this Chapter, and may also penetrate the #sky exposure plane# set forth in Section 104-321 (Mechanical equipment). Within 50 feet of the #upper street wall#, the width of such obstructions shall be limited in total to 10 percent of the #aggregate width of street walls# of a #building#, per #street# frontage, at any level above the maximum level of mechanical equipment as set forth in Section 104-321. Beyond 50 feet from the #upper street wall#, the permitted obstructions may occupy an area not to exceed 30 percent of the building coverage at the ground level. Where portions of the #upper street wall# are located at different distances from the #street line# or #mandatory widened sidewalk line#, whichever is applicable, the portion used to establish such reference line shall be the portion that occupies the greatest area of such #upper street wall#. However, in no event shall such obstructions be located within 10 feet of the #upper street wall#.

* * *

104-33
Mandatory Street Walls

* * *

(e) ~~For any development located on~~ On Parcels C3 and C4, ~~any~~ the applicable #lower street wall# provision may ~~apply~~ be applied to the entire #building#.

* * *

104-422
Midblock Open Areas

* * *

For #buildings# adjacent to the Midblock Open Areas, other than a #building# located on Parcel E2 as shown on Map 5 (Parcel Designation and Maximum Building Heights) in Appendix A of this Chapter, #building# walls fronting on such Midblock Open Areas shall be transparent for at least 50 percent of the area of each such wall, measured from the finished level of the adjacent pavement to the height of the ceiling of the second #story#.

104-423
East/West Open Area

An East/West Open Area shall be provided as shown on Map 7 (Mandatory Open Areas) in Appendix A of this Chapter. The East/West Open Area shall have:

(a) a minimum width of 60 feet and shall be open to the sky;

(b) a minimum clear path of 15 feet, which shall be improved as a paved surface of a non-skid material, whether wet or dry; and

(c) a minimum of 20 percent of its area improved with landscape treatment, including planting and other amenities. No walls or planters shall be higher than two feet above the finished level of the adjacent sidewalk.

Air intake grilles, flush to grade, shall be permitted, provided such intake grilles do not exceed 10 percent of the area of the East/West Open Area, and are concealed from public view by planting or other design features.

The full width of the East/West Open Area shall be improved and open to the public, prior to applying for and receiving a temporary certificate of occupancy for any ~~new #building#~~ #development# adjacent to such area.

104-424
The Square

Area of the Square

If Block D is developed as a single #zoning lot#, an open area known as "the Square," with a minimum area of 40,000 square feet, shall be provided, connecting West 130th and West 131st Streets, as shown on Map 7 (Mandatory Open Areas) in Appendix A of this Chapter. This minimum area shall not include either the Midblock Open Area on Block D, or the area of the #mandatory widened sidewalks# on the West 130th and 131st Street frontages adjacent to the Square.

The Square shall be used for open space accommodating both passive recreation and limited active recreation.

Building transparency

The bounding #building# wall on the west side of the Square shall be transparent for 50 percent of the area of such wall, measured from the finished level of the adjacent pavement to the height of the ceiling of the second #story#.

* * *

On any #building# wall adjacent to and facing the Square, exhaust or air intake vents shall be located higher than 15 feet above the level of the Square.

* * *

104-425
The Small Square

If Block C is developed as a single #zoning lot#, an open area known as the "Small Square," with a minimum area of 10,000 square feet, shall be provided as a passive open space, connecting West 129th and West 130th Streets. It shall be improved with paved surfaces of a non-skid material, whether wet or dry. No fences or walls shall be permitted in the Small Square.

The bounding building walls on all #buildings#~~-~~ abutting# the Small Square shall be transparent for 50 percent of the area of the portion of each such wall measured from the finished level of the adjacent pavement to the height of the ceiling of the second #story#.

The Small Square shall be landscaped with a minimum of eight trees. Such trees shall measure at least four inches in caliper at the time of planting, except that trees which are multi-stem varieties shall have a minimum height of eight feet, and shall be planted in soil with a minimum depth of four feet. All trees shall be planted flush to grade.

A minimum of 30 moveable seats shall be provided at all times; additional moveable or fixed seating may be provided.

104-426
The Grove

If Block A is ~~#developed#~~ developed as a single #zoning lot#, an open area known as "the Grove," with a minimum area of 400 square feet, shall be provided as a passive open space connecting West 125th and West 129th Streets. It shall contain seating at the western portion of the Block and a grove of trees with a minimum of four trees. Such trees shall measure at least four inches in caliper at the time of planting, except that trees which are multi-stem varieties shall have a minimum height of eight feet, and shall be planted in soil with a minimum depth of four feet.

The Grove shall be improved with paved surfaces of a non-skid material, whether wet or dry. It shall be landscaped with trees planted flush to grade and may include additional planting. The Grove may contain fixed or moveable seating.

No fences, walls or planters are permitted in the Grove.

* * *

104-50
PERMITTED TRANSFER OF FLOOR AREA

Transfers of #floor area# may be made from granting sites to receiving sites, within Subdistrict A, subject to the requirements of this Section.

For the purposes of this Section, a "granting site" shall mean any #zoning lot# in Subdistrict A that comprises a #block# as identified by letter on Map 2 (Subdistrict A Block Plan) in Appendix A of this Chapter, or the portion of the #block# identified as Block H on Map 2, from which #floor area# is to be transferred pursuant to the provisions of this Section, and a "receiving site" shall mean a #zoning lot# in Subdistrict A that comprises a #block#, as identified by letter on Map 2, or the portion of the #block# identified as Block H on Map 2, to which #floor area# is transferred.

#Floor area# may be transferred as follows:

(a) by notice, in accordance with the provisions of Section 104-52 (Transfer of Floor Area by Notice);

(b) by authorization, in accordance with the provisions of Section 104-53 (Transfer of Floor Area by Authorization); or

(c) by special permit, in accordance with the provisions of Section 104-60 (MODIFICATION OF SPECIAL BULK REQUIREMENTS AND TRANSFER OF FLOOR AREA BY SPECIAL PERMIT), where the proposed #development# or #enlargement# on the receiving site requires modification of the #bulk# regulations of Section 104-30 (SPECIAL HEIGHT AND SETBACK REQUIREMENTS).

* * *

Article X - Special Purpose Districts
Chapter 5
Special Natural Area District

* * *

105-01
Definitions

Definitions specially applicable to this Chapter are set forth in this Section. The definitions of other defined terms are set forth in Section 12-10 (DEFINITIONS).

* * *

Average percent of slope

The "average percent of slope" of a #zoning lot# is the average slope of all portions of a #zoning lot# excluding #steep slopes# and shall be determined according to the following equation:

$$S = \frac{IL}{A} \times 100$$

Where: S - #average percent of slope#

I - contour interval in feet

L - combined length of contour lines in feet, excluding those portions bordering or lying within areas having a slope of 25 percent or greater and meeting the definition of #steep slope#

A - gross area in square feet of the #zoning lot#, excluding those portions of the #zoning lot# having a slope of 25 percent or greater and meeting the definition of #steep slope#. For a proposed #site alteration# on a tract of land not within a #zoning lot#, the portion of such tract of land owned by the applicant shall be considered to be part of the #zoning lot#.

100 - factor which yields slope as a percentage

CALCULATING AREAS HAVING
A SLOPE EQUAL TO OR GREATER THAN 25 PERCENT
ILLUSTRATIVE EXAMPLE

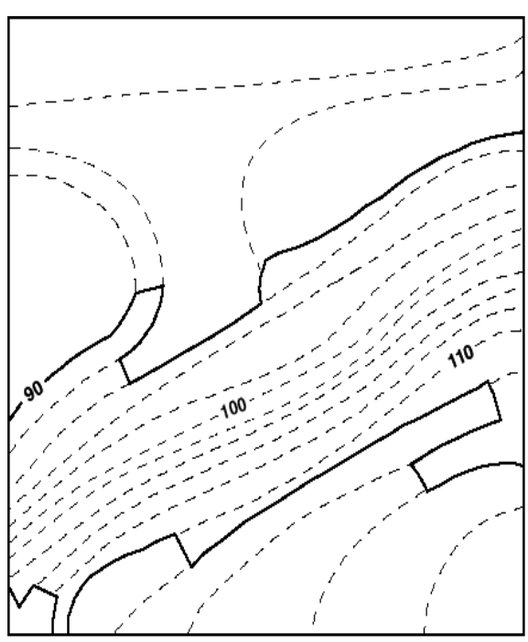

Example:

$$X = \frac{\text{Contour interval in feet}}{0.25} = \frac{2}{0.25} = 8.0 \text{ feet}$$

Where:

X - distance between contour lines which indicates a slope of 25 percent

In order to calculate the area having a slope equal to or greater than 25 percent, one can use a map with two-foot contour intervals and a scale of one inch equals 20 feet, as shown in the map in this Section. A 25 percent slope, on a map with two-foot contour intervals, is indicated by contour lines that are 8.0 feet apart, rounded to the nearest tenth (0.1) of a foot. On a map whose scale is one inch to 20 feet, 8.0 feet is represented by 0.4 of an inch, rounded to the nearest tenth (0.1) of an inch. Identify where the contour lines are 0.4 of an inch or less apart. Connect these contour lines (as indicated by the heavy lines on the map) and calculate the area.

* * *

Tier I site

A "Tier I site" ~~#development#, #enlargement# or #site alteration#~~ is ~~any #development#, #enlargement# or #site alteration# that occurs on~~ a #zoning lot# or other tract of land having an #average percent of slope# of less than 10 percent.

Tier II site

A "Tier II site" ~~#development#, #enlargement# or #site alteration#~~ is ~~any #development#, #enlargement# or #site alteration# that occurs on~~ a #zoning lot# or other tract of land having an #average percent of slope# equal to or greater than 10 percent.

* * *

105-022
Requirements for application

An application to the City Planning Commission for certification, authorization or special permit and to the Department of Buildings respecting any #development#, #enlargement# or #site alteration#, to be made within any #Special Natural Area District#, shall include the following:

* * *

(c) a site plan prepared by a registered architect or professional engineer indicating the location of all existing #buildings or other structures#; the location of all proposed #buildings or other structures#; the location of existing and proposed patios, decks, swimming pools, walkways, driveways and #private roads#, including sidewalks and other impervious surfaces; the location of any #steep slopes#, #steep slope buffer# areas and the #staging area#; and the location, #caliper# and species of all trees of six-inch #caliper# or more on the #zoning lot# and in the sidewalk area of the adjacent #streets#. The site plan shall identify those trees proposed to be removed and those trees proposed to be preserved, indicating, for the latter, the #critical root zone# and in addition, for #Tier II sites# ~~#developments#, #enlargements# and #site alterations#~~, the location of any other #area of no disturbance#;

* * *

(g) any other information necessary to evaluate the request; and

(h) for #developments#, #enlargements# and #site alterations# on #Tier II ~~#~~sites#, the application shall also include:

* * *

105-34
Grading Controls for Tier II Sites

With the exception of #private roads# and driveways, no grading shall take place beyond 15 feet of the location of a building foundation, measured from the foundation perimeter. The following grading requirements shall apply to all #Tier II sites# ~~developments#, #enlargements# or #site alterations#~~.

* * *

105-35
Tier II Requirements for Driveways and Private Roads

The provisions set forth in this Section and Section 105-34 (Grading Controls for Tier II Sites) shall apply to driveways and to #private roads# that provide access to #buildings ~~#~~developed# after February 2, 2005. The provisions for #private roads# set forth in Article II, Chapter 6, shall not apply.

* * *

105-37
Special Erosion and Sedimentation Prevention Requirements for Authorizations for Tier II Sites

Any #development#, #enlargement# or #site alteration# that is on a #Tier II ~~#~~site# and requires an authorization shall be subject to the provisions of this Section. The requirements of this Section shall supplement any other requirements set forth in Section 105-40 (SPECIAL REVIEW PROVISIONS) that also must be met.

* * *

105-38
Special Submission Requirements for Authorizations on Tier II Sites

When a #development#, #enlargement# or #site alteration# is on a #Tier II ~~#~~site#, an application to the City Planning Commission for an authorization shall include the following submission requirements. These requirements shall be in addition to the requirements set forth in Section 105-40 (SPECIAL REVIEW PROVISIONS).

* * *

105-40
SPECIAL REVIEW PROVISIONS

The provisions of this Section shall apply to all #developments#, #enlargements# or #site alterations# located within a #Special Natural Area District#.

Prior to the issuance by the Department of Buildings of any permit for a #development#, #enlargement# or #site alteration# within a #Special Natural Area District#, the City Planning Commission shall certify to the Department of Buildings that the #development#, #enlargement# or #site alteration# is approved pursuant to Sections 105-41, 105-42, 105-43 or 105-44, inclusive.

The provisions of Article VII, Chapter 8 (Special Regulations Applying to Large-Scale Residential Developments) shall apply to ~~all #developments# and #enlargements#, where any~~

~~such #development# or #enlargement# is~~ a #large-scale residential development#, ~~except~~ as modified by the provisions of Section 105-701 (Applicability of large-scale residential development regulations).

* * *

105-422
Authorization of a development, enlargement or site alteration on a Tier II zoning lot or portion of a zoning lot having a steep slope or steep slope buffer

The City Planning Commission may authorize #developments#, #enlargements# and #site alterations# on a #Tier II ~~zoning lot~~ site# or on portions of a #zoning lot# having a #steep slope# or #steep slope buffer#.

* * *

105-43
Authorizations to Modify Bulk, Parking, Grading and Private Roads Regulations

For a #development#, #enlargement# or #site alteration# located within the #Special Natural Area District#, the City Planning Commission may authorize:

(a) modification of #lot coverage# controls in accordance with the provisions of Section 105-431;

(b) modification of underlying district regulations relating to #bulk# or #parking# in accordance with the provisions of Section 105-432 (Modification of yard, height and setback regulations, and parking location regulations);

(c) modification of grading controls in accordance with the provisions of Section 105-433; and

(d) modification of requirements for driveways and private roads on #Tier II sites# in accordance with the provisions of Section 105-434.

105-431
Modification of lot coverage controls

For any #development# or #enlargement# on a #Tier II site ~~zoning lot~~# or within a #steep slope# or a #steep slope buffer# on a #Tier I site ~~zoning lot~~#, the City Planning Commission may authorize variations in the #lot coverage# controls set forth in Section 105-33.

* * *

105-432
Modification of yard, height and setback regulations, and parking location regulations

For any #development# or #enlargement# that does not qualify under provisions of Section 105-701 (Applicability of large-scale residential development regulations), the City Planning Commission may authorize variations in required #front#, #rear# or #side yards#, parking lot landscaping or maneuverability requirements, location of parking, driveways or curb cuts and required space between #buildings# on the same #zoning lot#, and may modify height and setback regulations for the purpose of preserving #natural features#, provided the Commission finds that:

(a) the proposed placement of #buildings# and arrangement of #open space# will not have significant adverse effects upon the light, air and privacy for existing ~~#development#~~ #buildings# in adjacent areas or the opportunities therefore in future #development#; and

(b) will preserve significant #natural features#.

The Commission may condition such authorizations upon the joint submission of acceptable plans for #development# or #enlargement# of two or more adjacent #zoning lots# by the owners thereof.

105-433
Modification of grading controls

For any #development#, #enlargement# or #site alteration# on a #Tier II site ~~zoning lot~~#, the City Planning Commission may authorize variations in the grading controls set forth in Section 105-34.

In order to grant such authorization, the Commission shall find that:

* * *

105-434
Modification of requirements for private roads and driveways

For any #development#, #enlargement# or #site alteration#, the City Planning Commission may authorize variations in the requirements for #private roads# and driveways on any #Tier II site ~~zoning lot~~# as set forth in Section 105-35 (Tier II Requirements for Driveways and Private Roads) as well as the requirements of Sections 25-621 (Location of parking spaces in certain districts) and 25-631 (Location and width of curb cuts in certain districts).

* * *

105-441
Modification of use regulations

In addition to any #use# modifications which may be granted under the provisions of Section 105-701 (Applicability of large-scale residential development regulations), the City Planning Commission may permit #semi-detached# or #attached single-family residences# in R2 Districts and #attached single-# or #two-family residences# in R3-1 Districts.

Furthermore, except in the #Special Natural Area District#-1 (NA-1), the Commission may permit #semi-detached# or #attached single-family residences# in R1-2 Districts provided that the #development# or #enlargement# is on a tract of land of at least four acres, and provided the Commission finds that:

* * *

(e) the proposed #street# system for the ~~#development#~~ tract of land to be #developed# is so located as to draw a minimum of vehicular traffic to and through #streets# in the adjacent area; and

(f) the existing topography, vegetation and proposed planting effectively screen all #attached single-family residences# from the #lot lines# along the ~~#development#~~ perimeter of the tract of land to be #developed#.

* * *

105-50
REGULATIONS FOR PROTECTION OF NATURAL FEATURES

* * *

(l) For a #steep slope#, these additional requirements apply:

(1) In all #Residence Districts#, for #residential developments# on individual #zoning lots# substantially within a #steep slope# area, the #lot area per dwelling unit# requirement shall not be less than 12,500 feet. Except in R1 Districts located in #Special Natural Area District#-1 (NA-1), the Commission may, for a tract of land of at least four acres substantially within the #steep slope# area, modify, by authorization, the #lot area per dwelling unit# requirement set forth in this paragraph, (l)(1), for the #steep slope# area, and may allow #development# to be concentrated in clusters to preserve the #steep slope# areas in their natural state, provided that such clusters are located to the extent feasible in areas of comparatively flat topography and will not require unnecessary grading on adjacent slopes or the creation of new #steep slopes#.

(2) In no event shall the #lot area per dwelling unit# requirement be less than the amount required by the underlying district regulations.

(3) Existing vegetational cover in steep areas shall not be removed, destroyed or damaged except pursuant to ~~#development#~~ development and grading plans approved by the Commission. An objective of such plans shall be to fit #street# layouts and building designs to the natural terrain, limit grading to a practical minimum and provide for maximum preservation of the natural terrain and vegetational cover.

* * *

105-70
SPECIAL REGULATIONS FOR RESIDENTIAL DEVELOPMENT

In order to carry out the purposes of this Chapter, all ~~#developments# used~~ #zoning lots developed# predominantly for #residential use# may be subject to the provisions of this Section.

105-701
Applicability of large-scale residential development regulations

The provisions of Article VII, Chapter 8 (Special Regulations Applying to Large-Scale Residential Developments) shall apply except as modified by the provisions of this Section.

Any ~~#development# used~~ #zoning lot developed# predominantly for #residential uses# may be treated as a #large-scale residential development#, and authorizations or special permits for such ~~#development#~~ #zoning lot# may be granted in accordance with the provisions of Article VII, Chapter 8, as modified herein or in Section 105-80 (JOINT APPLICATIONS), regardless of whether such ~~#development#~~ #zoning lot# will have the area, number of #buildings# or number of #dwelling units# specified in the definition of #large-scale residential development# as set forth in Section 12-10 (DEFINITIONS).

However, in R1 Districts located in the #Special Natural Area District#-1 (NA-1), no modification of minimum required #lot area# as set forth in Section 23-32 (Minimum Lot Area or Lot Width for Residences) shall be allowed for any #development# pursuant to paragraph (c) of Section 78-311 (Authorizations by the City Planning Commission) or Section 78-32 (Bonus for Good Site Plan) but modifications of required #front# or #rear yards# and height and setback regulations on the periphery of such ~~#development#~~ #zoning lot#, pursuant to paragraphs (c) and (d) of Section 78-312 (Special permits by the City Planning Commission) shall apply. Modification of #side yards# of all ~~#developments#~~ #zoning lots#, including ~~#developments#~~ #zoning lots# in R1 Districts, shall be subject to the provisions of Section 105-432 (Modification of yard, height and setback regulations, and parking location regulations).

Bonuses which may be granted for #large-scale residential developments#, pursuant to Section 78-32 through Section 78-35 (Special Bonus Provisions), may not be granted for ~~#developments#~~ #zoning lots# which have less than 10 acres and less than the number of #buildings# or number of #dwelling units# required by the definitions of a #large-scale residential development#. Commonly- or separately-owned areas containing #natural features# may qualify as common

#open space# for purposes of satisfying #open space# requirements ~~in #residential developments#~~.

Approval by the Commission of a development plan incorporating #natural features# as common #open space# shall be conditioned upon the findings required in Sections 78-313 (Findings) and 78-52 (Common Open Space) with respect to the qualification of areas as common #open space# and upon additional findings that appropriate safeguards are provided for the protection and preservation of such #natural features#. In the case of #natural features# that are determined to have qualities of exceptional recreational, cultural or educational value to the public and that are directly accessible to the public from a public right-of-way, the applicant may request the City to take title or a less than fee interest in the property occupied by such a #natural feature# without any cost to the City or its designee for #use# and enjoyment by the public subject to the provisions of Section 105-60 (MAINTENANCE OF NATURAL FEATURES).

105-702
Applicability of lower density growth management area regulations

The regulations for #developments# or #enlargements# within #lower density growth management areas# are modified as follows:

(a) Parking location regulations

#Accessory# parking spaces shall be permitted within a #front yard#.

(b) Private road regulations

The provisions of paragraph (b) of Section 105-35 (Tier II Requirements for Driveways and Private Roads) shall apply to #Tier II sites# ~~developments# or #enlargements#~~ accessed by #private roads#.

* * *

105-90
FUTURE SUBDIVISION

Within a #Special Natural Area District#, any #zoning lot# existing on the effective date of the Special District designation may be subdivided into two or more #zoning lots#, provided that #natural features# are preserved to the greatest extent possible under future ~~#development#~~ development options.

* * *

105-92
Special Provisions for City-owned Land

~~For any #development# or #site alteration# on City-owned land located within a #Special Natural Area District#, the~~ The provisions of Section 105-40 (SPECIAL REVIEW PROVISIONS) shall apply on City-owned land, except that modifications permitted under Section 105-44 (Special Permits) may be approved by the City Planning Commission.

Furthermore, provisions of Section 105-93 (Inter-agency Coordination) shall apply ~~to all #developments# or #site alterations#~~ on City-owned land. However, the provisions of this Chapter shall not apply to any public improvement project approved by the Board of Estimate prior to the effective date of the Special District designation.

* * *

105-944
Special Fort Totten Natural Area District-4

* * *

(c) General requirements

* * *

(2) Pier development

The Commission may permit, by special permit, pier #development#, only upon finding that the proposed #development# shall have no significant adverse impact on the Special District or surrounding environment. The Commission may prescribe appropriate conditions and safeguards to minimize possible adverse effects on the surrounding area.

(d) Special regulations

* * *

(7) Planned community area (Area B)

In order to protect the unique scale, character and design relationships between the existing #buildings# and public #open spaces# and parade grounds, no #development#, #enlargement# nor alteration of landscaping or topography shall be permitted, except as set forth herein and as provided by paragraph (d)(1) of this Section.

(i) Special permit

For any #development#, #enlargement# or alteration of landscaping or topography, the Commission may, by special permit, allow:

(a) the unused total #floor area#, #dwelling units# or #rooming units# permitted by the applicable district regulations for all #zoning lots# within the ~~#development#~~ development to be distributed without regard for #zoning lot lines#;

(b) the total #open space# or #lot coverage# required by the applicable district regulations for any #zoning lot# within the ~~#development#~~ development to be distributed without regard for #zoning lot lines#;

* * *

(ii) Findings

As a condition precedent to the granting of a special permit under the provisions of paragraph (d)(7)(i) of this Section, the Commission shall make the following findings:

(a) that the ~~new~~ #development#, #enlargement# or said alteration is related to the existing #buildings or other structures# in the Planned Community Area (Area B) in scale and design, and that the ~~new~~ #development# will not seriously alter the scenic amenity and the environmental quality of the area;

(b) that the ~~new~~ #development# or #enlargement# be sited in such a manner as to preserve the greatest amount of #open space# and landscaping that presently exists, consistent with the scale and design of the existing ~~#development#~~ #buildings# and the landscaping surrounding the new landscaping arrangement and conditions of the community;

(c) that the ~~new~~ #development# or #enlargement# is sited such that it will not require at the same time or in the foreseeable future new access roads or exits, off-street parking or public parking facilities that will disrupt or eliminate major portions of #open space# and landscaping or will generate large volumes of traffic which will diminish the environmental quality of the community;

(d) that minimal landscaping is to be removed during construction and such areas will be fully restored upon completion of construction.

The Commission may prescribe appropriate conditions and safeguards, including covenants running with the land which shall permit public or private enforcement reflecting terms, conditions, and limitations of any special permit hereunder to minimize adverse effects on the character and quality of the community.

* * *

(10) Development area (Area E)

Any ~~#development# used~~ #zoning lot developed# predominantly for #residential uses# may be considered a #large-scale residential development#, and authorizations or special permits for such ~~#development#~~ #zoning lot# may be granted in accordance with the provisions of Article VII, Chapter 8, except that the #accessory uses# of 78-22 (Accessory Uses in Large-Scale Residential Developments) shall not apply.

Any ~~#development# used~~ #zoning lot developed# predominantly for #community facility uses# may be treated as a #large-scale community facility development#, and authorizations or special permits for such ~~#development#~~ #zoning lot# may be granted in accordance with the provisions of Article VII, Chapter 9.

* * *

Article X - Special Purpose Districts
Chapter 6
Special Coney Island Mixed Use District

106-00
GENERAL PURPOSES

The "Special Coney Island Mixed Use District" established in this Resolution is designed to promote and protect the public health, safety and general welfare. These general goals include, among others, the following specific purposes:

(a) to stabilize the residential future of this mixed residential and industrial area by permitting expansion and ~~new~~ development of residential and light manufacturing uses where adequate environmental standards are assured;

* * *

~~**106-01**~~
~~**Definition**~~

~~Special Coney Island Mixed Use District~~
~~(repeated from Section 12-10)~~

~~The "Special Coney Island Mixed Use District" is a Special Purpose District designated by the letters "CO" in which special regulations set forth in Article X, Chapter 6, shall apply.~~

106- ~~02~~ 01
General Provisions

In harmony with the general purpose and intent of this Resolution and the general purpose of the #Special Coney Island Mixed Use District# and in accordance with the provisions of this Chapter, regulations of the #Special Coney Island Mixed Use District# shall replace and supersede the existing district regulations.

All #residences#, #community facilities#, and Use Group 4B open #uses# shall be subject to all the provisions applicable in R5 Districts, except as otherwise specifically provided in this Chapter. The special regulations relating to #predominantly built-up areas#, as defined in Section 12-10 (DEFINITIONS), shall apply to all ~~new~~ ~~#residential~~ buildings# containing #residences# ~~or #enlargements#~~, except that #front yards# shall ~~be optional~~ not be required.

* * *

106-10
SPECIAL REGULATIONS FOR RESIDENTIAL USES

106-11
Special Provisions for As-of-Right ~~New~~ Residences

~~New~~ #Developments# or #enlargements# containing #residences# are allowed as-of-right, provided that:

(a) the #zoning lot# shares a common #side lot line# on at least one side with a #residential# or #community facility use#;

* * *

106-12
Special Permit Provisions for Residential Uses

The City Planning Commission may permit within the #Special Coney Island Mixed Use District#:

(a) change of #commercial# or #manufacturing use# to #residential use#; and

(b) modification in #yard# and off-street parking regulations for #residential uses# in ~~new #buildings#~~ #developments# or #enlargements#;

provided that the following findings are made:

* * *

106-20
SPECIAL REGULATIONS FOR COMMUNITY FACILITY USES

106-21
Special Permit Provisions for Community Facility Uses

The City Planning Commission may permit within the #Special Coney Island Mixed Use District#:

(a) ~~new~~ #development# of #community facility buildings#; and

(b) change of #use# of a #residential, manufacturing# or #commercial building# to a #community facility use#;

provided that the following finding are made:

* * *

106-30
SPECIAL REGULATIONS FOR MANUFACTURING OR COMMERCIAL USES

* * *

106-32
Special Permit Provisions for Manufacturing and Commercial Uses

The City Planning Commission may permit within the #Special Coney Island Mixed Use District#:

(a) #uses# listed in Section 106-311 (Use Group M) or #commercial uses# in ~~new~~ #developments# not permitted by the provisions of Section 106-31 (Special Provisions for As-of-Right New Buildings for Use Group M or Commercial Use);

(b) change of #use# ~~of~~ from a #residential ~~building~~ use# to Use Group M or #commercial use#; and

(c) modifications in #yard# regulations for Use Group M or #commercial uses# in ~~new #buildings#~~ #developments# or #enlargements#;

provided that the following findings are made:

(1) that such ~~new #development# or #enlargement#~~ #use# will comply with the regulations on performance standards of M1 Districts;

(2) that additional truck traffic generated by ~~expanded or new #development#~~ such #use#, or the modification of #yard# regulations, will not create harmful, congested or dangerous conditions; and

(3) that a change of #use# from #residential# to Use Group M or #commercial use# shall not displace or preempt any #building# which is essential to the functioning and growth of existing residences within the district.

The City Planning Commission may prescribe additional appropriate conditions and safeguards to minimize adverse effect on the character of the surrounding area.

* * *

106-34
Special Yard Regulations

Where a #side lot line# of a #zoning lot# containing #manufacturing# or #commercial uses# coincides with the #side# or #rear lot line# of a #zoning lot# containing #residential uses#, #enlargements# or ~~new~~ #developments# shall provide an open area not at any point more than 5 feet above nor 5 feet below #curb level#, and at least 15 feet wide.

Where the #rear lot line# of a #zoning lot# containing #manufacturing# or #commercial uses# coincides with a #side lot line# of a #zoning lot# containing #residential uses#, #enlargements# or ~~new~~ #developments# shall provide an open area not at any point more than 5 feet above nor 5 feet below #curb level#, and at least 20 feet in depth.

Where a #zoning lot# containing #manufacturing# or #commercial uses# shares a common #rear lot line# with a #zoning lot# containing #residential uses#, #enlargements# or ~~new~~ #developments# shall provide an open area not at any point more than 5 feet above nor 5 feet below #curb level#, and at least 30 feet in depth. Such open areas shall not be used for #accessory# off-street parking, #accessory# off-street loading, or for storage or processing of any kind.

106-40
SPECIAL REGULATIONS FOR BUILDINGS CONTAINING BOTH RESIDENTIAL AND COMMERCIAL USE

106-41
Use Regulations

~~New #buildings#~~ #Developments# containing ~~for~~ both #residential# and #commercial uses# are allowed ~~with~~ in the #Special Coney Island Mixed Use District#, provided that the regulations of this Chapter are met. No #buildings#, however, shall contain both #residential uses# and #uses# listed in Use Group 16.

* * *

106-52
Requirements for Applications

An application to the City Planning Commission for the grant of a special permit under the provisions of this Chapter shall include a site plan showing the location and proposed #use# of all #buildings or other structures# on the site, the location of all vehicular entrances and exits, and such other information as may be required by the City Planning Commission.

Special permit applications for ~~new~~ #development# pursuant to Section 106-32 (Special Permit Provisions for Manufacturing and Commercial Uses) shall be referred to the Department of ~~Traffic~~ Transportation for its report pursuant to Section 74-31, paragraph (d).

* * *

Article X - Special Purpose Districts
Chapter 7
Special South Richmond Development District

* * *

107-01
Definitions

Definitions specially applicable in this Chapter are set forth in this Section. The definitions of other defined terms are set forth in Section 12-10 (DEFINITIONS).

* * *

Development

For the purposes of this Chapter, a "development" includes ~~the construction of a new #building or other structure# on a #zoning lot#, the relocation of an existing #building# on another building lot, or the #use# of a tract of land for a new #use#~~ a #development# as defined in Section 12-10 (DEFINITIONS), ~~or~~ the #enlargement# of a non-#residential building#, or the #enlargement# of a #residential use# that involves the addition of one or more #dwelling units#.

To "develop" is to create a #development#.

* * *

~~Special South Richmond Development District~~
~~(repeated from Section 12-10)~~

~~The "Special South Richmond Development District" is a Special Purpose District designated by the letters "SRD" in which special regulations set forth in Article X, Chapter 7 apply to all #developments# or #site alterations# or subdivision of #zoning lots#. The #Special South Richmond Development District# appears on the #zoning maps# superimposed on other districts, and its regulations supplement or modify those of the districts on which it is superimposed.~~

* * *

107-02
General Provisions

In harmony with the general purpose and intent of this Resolution and the general purpose of the #Special South Richmond Development District#, the regulations of the districts upon which this Special District is superimposed are supplemented or modified in accordance with the provisions of this Chapter. Except as modified by the express provisions of this Chapter, the regulations of the underlying districts remain in effect.

In addition to applicability as provided in Section 11-10 (ESTABLISHMENT AND SCOPE OF CONTROLS, ESTABLISHMENT OF DISTRICTS, AND INCORPORATION OF MAPS), the ~~The~~ provisions of this Chapter shall apply to ~~all #developments#,~~ #site alterations# or subdivision of #zoning lots#, except:

(a) public improvement projects for which preliminary design contracts were approved by the Board of Estimate prior to January 2, 1975, or for which title was vested by the City prior to September 11, 1975; and

(b) any #large-scale ~~#~~ development# for which an authorization or special permit was granted prior to September 11, 1975. For the purposes of this Chapter, the City Planning Commission may extend such authorization or special permit for a renewable term of one year provided that the Commission finds that the facts upon which the authorization or special permit was granted have not substantially changed and that the adoption of this amendment shall not constitute a substantial change of fact.

~~The provisions of Sections 107-123 (Public Schools), 107-312 (Areas not within designated open space), 107-42 (Minimum Lot Area and Lot Width for Residences) and 107-46 (Yard and Court Regulations) shall not apply to any #development# on a #zoning lot# which has received #drainage scheme# approval or #sewer acceptance# after January 1, 1972, but prior to January 1, 1975, from the Department of Environmental Protection. Such exemption as set forth in this Section shall remain valid so long as the #drainage scheme# approval remains effective.~~

~~Any #zoning lot# which is exempted from the provisions of Sections 107-42 and 107-46 may be governed by the minimum #lot area# and #lot width# regulations for #residences# and the #yard# and #court# regulations of the underlying district.~~

For all #developments# located within areas D, F, or K as shown on the District Plan, the applicant shall obtain from the City Planning Commission a certification indicating that the #development# complies with the approved South Richmond Development Plan. As a condition for such certification, the Commission shall find that:

(1) the minimum #lot area# for any #commercial~~-~~#development# is at least 2 acres;

(2) vehicular access and egress for the #development# is arranged so that it affords the best means of controlling the flow of traffic generated by such #development#; and

(3) due consideration has been given to relate the proposed #development# to the character of the surrounding area by providing suitable buffering, landscaping and #building# setbacks.

For such certification, the applicant shall submit to the Commission a site plan and drawings depicting the proposed #buildings# and location of off-street parking facilities, curb cuts and pedestrian walkways. For #residential uses# within Area K, the #bulk# and parking regulations of R3-2 Districts, as modified by this chapter, shall apply.

* * *

107-08
Future Subdivision

Within the Special District, any #zoning lot# existing on September 11, 1975 may be subdivided into two or more #zoning lots# provided that the existing topography, all individual trees of six inch caliper or more and all land located within a #designated open space#, to the greatest extent possible, are preserved under future #development# options. Any subdivision that is proposed to take place within the Special District after September 11, 1975 shall be filed with the City Planning Commission, and the Commission shall certify that such subdivision complies with the approved South Richmond Plan and the above objective. In the case of a subdivision of a tract of land containing #designated open space#, a site plan indicating the distribution of #bulk# for the individual #zoning lots# shall be submitted to the Commission. Such approved subdivision shall then be recorded in the land records and indexed against all #zoning lots#. The subdivision plan shall include a survey map indicating existing topography at two foot contour intervals, all individual trees of six inch caliper or more, and the location of #designated open space# within the area. When a #zoning lot# existing on September 11, 1975 is more than five acres and is intended to be subdivided, an area plan of the entire subdivision shall be filed with the Commission. The area plan shall include the proposed ~~#street#~~ vehicular circulation system within the area, #block# and lot layouts and any other information required by the Commission.

* * *

107-12
Public Facilities

~~**107-121**~~
~~**Street access**~~

~~For any #development#, the Department of Buildings shall be in receipt of a report from the appropriate City agency specified by statute, certifying that the #development# as proposed will comply with the requirements of law concerning access to a mapped #street#.~~

~~107-122~~
~~Sewers~~

~~For any #development#, the Department of Buildings shall be in receipt of a report from the appropriate City agency or agencies specified by statute, certifying that adequate and available storm and sanitary disposal facilities, as required by law, are in place or will be provided to serve the proposed #development#.~~

107-123
Public schools

For any #development# containing #residential uses#, the Department of Buildings shall be in receipt of a certification from the Chairperson of the City Planning Commission which certifies that sufficient #school# capacity exists to accommodate the anticipated primary and intermediate public school children of the #development#. All applications for certification pursuant to this Section shall be referred by the Chairperson of the Commission to the Board of Education.

* * *

No certification concerning the availability of #school# capacity shall be required for any #development# ~~or #enlargement#~~ within a predominantly built up area or within an area for which #drainage schemes# were approved prior to January 1, 1975. For the purposes of this Chapter, a "predominantly built up area" is a #block# having a maximum of four acres which is #developed# with #buildings# on #zoning lots# comprising 75 percent or more of the area of the #block#. All such #buildings# shall have a certificate of occupancy or other evidence acceptable to the Commissioner of Buildings issued not less than three years prior to the date of application for a building permit.

* * *

107-221
Active recreational facilities

* * *

If the City of New York acquires an easement for public access to any #designated open space# on which a ~~#development#~~ #building# has been, is being or could be in the future, constructed in accordance with the provisions of this Chapter, the City's acquisition of an easement shall not affect the qualifications of the #designated open space# for satisfying #lot area# requirements, #yard# requirements, #floor area# or #lot coverage# restrictions or #open space# requirements as provided in Section 107-224 (Qualification of designated open space as lot area for bulk computations) and shall not be deemed to create a #non-compliance#.

107-222
Public pedestrian ways

For any #site alteration# or #development# on a #zoning lot# which contains #designated open space#, the City Planning Commission shall certify whether or not the applicant shall be required to provide a public pedestrian way through a portion of the #designated open space#.

* * *

The location and dimension of such pedestrian way shall be determined by the Commission. The

owner of the #zoning lot# may request the City to take an easement on his property. If the City of New York acquires an easement for public access to any #designated open space# on which a ~~#development#~~ #building# has been, is being or could be in the future, constructed in accordance with the provisions of this Chapter, the City's acquisition of an easement shall not affect the qualifications of the #designated open space# requirements as provided in Section 107-224 (Qualification of designated open space as lot area for bulk computations) and shall not be deemed to create a non-compliance.

* * *

107-224
Qualification of designated open space as lot area for bulk computations

* * *

Any #designated open space#, or portion thereof, claimed as required #open space# or used to satisfy the #lot coverage# restrictions for a ~~#residential~~ development# containing #residences# shall be accessible to and usable by all residents of the #zoning lot#.

In the case of a #large-scale residential development#, any #designated open space#, or portion thereof, that qualifies as #lot area# may be used as common space.

107-225
Special bulk regulations for developments containing designated open space

This section shall apply to ~~When~~ any tract of land containing #designated open space# that is #developed# as a unit in single ownership and ~~when~~ where the area of the #designated open space# claimed as #lot area# for zoning computation does not exceed the area of that portion of the tract of land not located within #designated open space#~~, the regulations set forth in this Section shall apply~~. Such a tract of land may contain a single #zoning lot# or two or more #zoning lots# which are contiguous or would be contiguous except for their separation by a #street#.

In all #Residence Districts#, except R1-1 Districts, for all permitted #residential uses# on such tract of land, the total #floor area# or #dwelling units# generated by that portion of the #designated open space# claimed as #lot area# by the applicable district regulations may be distributed without regard for #zoning lot lines#, for all #zoning lots# wholly within ~~the #development#~~ such tract of land. The total #open space# required or #lot coverage# permitted for such ~~#development#~~ tract of land may be located anywhere within the ~~#development#~~ tract of land without regard for #zoning lot lines#.

No transfer of #floor area# or #dwelling units# shall be permitted from a #zoning lot# not containing any #designated open space#.

The site plan and #bulk# distribution for the entire ~~#development#~~ tract of land shall be recorded in the land records and indexed against all #zoning lots# in ~~the #development#~~ such tract of land.

Furthermore, the minimum #lot area# and #lot width# regulations, #yards# and spacing between #buildings# regulations shall not apply along portions of #streets# or #lot lines# wholly within such ~~#development#~~ tract of land, provided that:

* * *

107-226
Zoning lots entirely or substantially within designated open space

When a #zoning lot# owned separately or individually from all adjoining #zoning lots# prior to January 2, 1975, is located entirely or substantially within #designated open space# and no reasonable ~~#development#~~ development is possible on the #zoning lot#, the owner may request the City to provide, in exchange, a City-owned #zoning lot#.

* * *

If such exchange of #zoning lots# is not feasible under this Section or Section 384-7.0 of the New York City Administrative Code, the City may either acquire such #zoning lot# or permit ~~#development#~~ development to proceed thereon with the minimal modification of the #designated open space# necessary to permit ~~#residential~~ development# containing #residences#.

107-23
Waterfront Esplanade

When a #zoning lot# containing a portion of the #waterfront esplanade#, as shown on the District Plan is #developed#, the location and design of the #waterfront esplanade# shall be certified by the City Planning Commission and ~~its #development#~~ such #waterfront esplanade# shall conform to the guidelines and standards established by the Department of City Planning in consultation with the Department of Transportation and the Department of Parks and Recreation.

* * *

The owner of a #zoning lot# may request the City to take an easement on the property. If the City of New York acquires an easement for public access to any #designated open space# on which a ~~#development#~~ #building# has been, is being or could be in the future constructed in accordance with the provisions of this Chapter, the City's acquisition of an easement shall not affect the qualifications of the #designated open space# for satisfying #lot area# requirements, #yard# requirements, #floor area# or #lot coverage# restrictions or #open space# requirements as provided in Section 107-224 (Qualifications of designated open space as lot area for bulk computations) and shall not be deemed to create a #non-compliance#.

107-24
Performance Bond

When the ~~#development#~~ provision of the required improvement is to be delayed for a period not to exceed 5 years from the date of the City Planning Commission certification, the owner of the #zoning lot# shall, prior to obtaining any certificate of occupancy, provide to the Comptroller of the City of New York a performance bond or City securities to ensure the future ~~#development#~~ provision of either the #waterfront esplanade# or the public pedestrian way.

When the required improvement has been constructed, the Comptroller of the City of New York may release the bond or City securities posted to ensure such construction, provided an amount of the bond or City securities to ensure maintenance of the improvement, as set forth in the paragraph above, remains with the Comptroller.

The value of the bond or City securities tendered to ensure the future ~~#development#~~ provision of the improvement shall be at the rate of $400 per 100 square feet of #waterfront esplanade# and at $200 per 100 square feet of public pedestrian way, if such bond or securities are tendered prior to January 1, 1980.

At five year intervals after January 1, 1980, the Commission, with the approval of the Board of Estimate, shall establish the new rates for the future ~~#development#~~ provision (and maintenance) of the improvement.

* * *

107-251
Special provisions for arterials

Along those #streets# designated as #arterials#, the following regulations shall apply:

* * *

(b) #Building# setback

Along portions of the #arterials#, as indicated on the District Plan, a 20 foot #building# setback shall be provided for the full length of the #front lot line# abutting such #arterial#. The front #building# setback area shall be unobstructed from its lowest level to the sky except as permitted by this Section. Where a front #building# setback area at least 35 feet in depth is provided, such setback area may be used for required #accessory# off-street parking or loading facilities. No portion of such required setback area may be used for open storage.

In the case of the service roads of the West Shore Expressway, a 30 foot #building# setback shall be provided and required off-street parking and loading facilities are permitted within such setback. Within the required front #building# setback, there shall be provided one tree of three-inch caliper or more, pre-existing or newly planted, for each 400 square feet of such front open area. The trees shall be selected in accordance with the table set forth in APPENDIX B.

107-252
Special provisions for park streets

For those #streets# designated as #park streets#, the following regulations shall apply:

* * *

(c) Development and maintenance responsibility

The owner of each ~~new~~ #development# abutting a #park street# shall have responsibility for landscaping and maintenance of that portion of the #park street# located between the #front lot line# and the curb.

* * *

107-312
Areas not within designated open space

On any portion of a #zoning lot# not within #designated open space#, alteration of topography shall be permitted only in accordance with the provisions of this Section.

The ground elevation of land existing on September 11, 1975, may be modified by up to two feet of cut or fill, provided that such modification shall not result in the destruction of trees of six-inch caliper or more, unless authorized pursuant to other provisions of this Chapter. Modification of topography to a greater extent is permitted:

(a) in an area designated for #building# foundations, driveways or utilities for a proposed #building or other structure# whose location is approved by the Department of Buildings in accordance with the provisions of this Chapter; and

* * *

107-321
Tree preservation

No trees of six-inch caliper or more shall be removed, or land operations affecting their survival undertaken, in connection with any #site alteration# or #development#, except in compliance with the provisions of this Section.

Prior to any such removal or land operations, plans shall be filed with the Department of Buildings showing the locations of all trees of six inch caliper or more on the #zoning lot# and in the public sidewalk area of the #street# or #streets# adjacent thereto, and identifying those which

are proposed to be removed. Removal of live trees of six-inch caliper or more will be permitted only under the following circumstances:

* * *

(c) where continued presence of the trees would interfere with ~~the development of~~ another tree of six-inch caliper or more designated for preservation and belonging to a species listed in APPENDIX B (Tree Selection Tables); or

* * *

107-322
Tree requirements

~~All #developments# within the #Special South Richmond Development District# shall provide n~~New trees shall be provided in accordance with the table set forth in Appendix B. For any existing tree of at least six inch caliper which is preserved, credit for one tree shall be given for the first six inches of caliper and, for each additional four inches of caliper, credit for an additional tree shall be given.

(a) On site

In connection with any #development#, #site alteration# or #enlargement# involving the addition of at least 1,000 square feet of #floor area#, trees of at least three-inch caliper, pre-existing or newly planted, shall be provided on the #zoning lot# at the rate of one tree for each 1,000 square feet of #lot area# or portion thereof.

(b) Planting for open parking areas

~~In underlying #Residence#, #Commercial# or #Manufacturing Districts#, all~~ Any #development# with open off-street parking areas with ten spaces or more shall be subject to the tree planting and screening requirements of Section 107-483.

* * *

107-42
Minimum Lot Area and Lot Width for Residences

For all #zoning lots# containing #residences#, the minimum #lot area# and #lot width# requirements set forth in the table in this Section shall apply, which shall vary by #building# height. Where two or more #buildings# that are #single-# or #two-family detached# or #semi-detached residences# are located on a #zoning lot#, the applicable minimum #lot area# requirement shall be multiplied by the number of such #buildings# on the #zoning lot#.

The #lot width# requirements set forth in this Section shall be applied as set forth in the definition of #lot width# in Section 12-10 (DEFINITIONS), provided that the applicable #lot width#, in feet, set forth in the table shall be met along at least one #street line# of the #zoning lot# or, for #corner lots#, along each intersecting #street line#. No #residence#, or portion thereof, shall be permitted between opposing #side lot lines# where such #lot lines# would be nearer to one another at any point where such #residence# is located than the applicable minimum lot width, in feet, set forth in the table.

However, one #single-family detached residence# or, where permitted, one #single# or #two-family residence#, may be built upon a #zoning lot# consisting entirely of a tract of land, that:

(a) has less than the minimum #lot area# or #lot width# required pursuant to this Section; and

(b) was owned separately and individually from all other adjoining tracts of land, both on December 8, 2005 and on the date of application for a building permit.

In all cases, the density regulations of the applicable district shall remain in effect, except that the factor for determining the maximum number of #dwelling units# shall be 1,000 in R3A and R4A Districts, 1,140 in R3X Districts, and 685 for #semi-detached residences# in R3-1 and R3-2 Districts.

District	Type of #Residence#	~~Minimum~~ Height (in #stories#)	Minimum #Lot Area# (in sq. ft.)	Minimum #Lot Width# (in feet)
R1-1	#detached#	1-4	9,500	100
R1-2	#detached#	1-2	5,700	40
		3	5,700	50
		4	5,700	60
R2	#detached#	1-4	3,800	40
R3-1	#detached#	1-2	3,800	40
		3-4	3,800	45
R3-1 R3-2	#semi-detached#	1-2	2,375	24
		3-4	3,800	40
R3-2	#detached#	1-2	3,800	40
		3-4	4,275	45
	#attached#	1-2	1,700	18
		1-2	2,375*	24*
		3-4	2,280	24
		3-4	3,800*	40*
R3A	#detached#	1-3	3,325	35
R3X**	#detached#	1-2	3,800	40
		3	4,750	50
		4	5,700	60
R4A	#detached#	1-3	3,325	35
R4-1	#semi-detached#	1-3	2,375	24
	#detached#	1-3	3,325	35

* For #attached buildings# that #abut# an #attached building# on a separate #zoning lot# on one side and on the other side are bounded by #yards# or open area.

** In Area LL as shown on the District Plan in Appendix A of this Chapter, all #residences# shall have a minimum #lot area# of 5,700 square feet and a minimum #lot width# of 50 feet. However, the minimum #lot area# and minimum #lot width# set forth in this table shall apply to any #development# on a #zoning lot# having an area of at least 1.5 acres for which applications for certifications pursuant to Sections 107-08 (Future Subdivision) and 107-123 (Public schools) have been filed prior to March 1, 2003.

By Special Permit
(pursuant to Section 107-74)

District	Type of #Residence#	~~Minimum~~ Height (in #stories#)	Minimum #Lot Area# (in sq. ft.)	Minimum #Lot Width# (in feet)
R2	#semi-detached#	1-4	3,800	30

	#attached#	1-4	3,800	22
R3-1	#attached#	1-2	1,700	20
		3-4	2,280	24

* * *

107-45
Required Open Space for Residences

Any required #open space# on a #zoning lot# which includes #designated open space# is subject to the special regulations set forth in Section 107-22 (Designated Open Space).

For ~~#residential developments#~~ #buildings# containing #residences# on #zoning lots# that include #designated open space#, driveways, private streets, open #accessory# parking spaces or open #accessory# off-street loading berths may occupy not more than the area set forth for the following districts:

(a) in R1, R2, R3-1, R3-2 and R4 Districts, not more than 50 percent of the required #open space# not within the #designated open space#; or

(b) in R3A, R3X, R4A and R4-1 Districts, not more than 50 percent of the #lot area# not occupied by ~~#residential buildings#~~ #buildings# containing #residences# and not within the #designated open space#.

However, in all districts, a greater percentage may be so occupied if authorized by the City Planning Commission in accordance with the provisions of Section 107-661 (Modification of Permitted Obstructions).

107-46
Yard and Court Regulations

107-461
Front yards

In all ~~underlying~~ #Residence Districts#, the #front yard# requirements of the underlying districts shall apply, except ~~R1 Districts and those districts subject to paragraph (b) in Section 23-45~~ that in R2 districts without a letter suffix, R3-1, R3-2, R4 districts without a letter suffix and R5 districts without a letter suffix, #front yards# shall be at least 18 feet in depth. On #corner lots# one #front yard# may have a lesser depth as permitted by the underlying district regulations.

* * *

107-463
Side yard regulations for other residential buildings

For all #residential buildings# other than #single-#, or #two-family detached# or #semi-detached residences#, the provisions of Section 23-462 (Side yards for all other residential buildings) shall apply, except that no #side yard# shall have a width less than ten feet.

Furthermore, for #attached residences# that #abut# an #attached building# on a separate #zoning lot# on one side and are bounded by open area on the other side, one #side yard# with a minimum width of 9 feet shall be required for such one or two #story residences#, and one #side yard# with a minimum width of 15 feet shall be required for such three or four #story residences#.

107-464

Side yards for permitted non-residential use

For #community facility buildings# or other #buildings# used for permitted non-#residential uses# in #Residence Districts#, the provisions of Section 24-35 (Minimum Required Side Yards) shall apply to such #community facility buildings# or the provisions of Section 23-464 (Side yards for buildings used for permitted non-residential uses) shall apply to such other ~~non-#residential~~ #non-residential buildings#, except that no #side yard# shall have a width less than 10 feet and, in the case of #buildings# more than three #stories# in height, the required total width of both #side yards# shall not be less than 25 feet.

Where greater widths of #side yards# are required by the provisions of Sections 23-464 or 24-35 than by the provisions of this Section, such requirement of greater width shall apply.

~~**107-466**~~
~~**Special yard regulations for certain zoning lots**~~

~~In all #Residence Districts#, except R1-1 Districts, when a tract of land containing two or more #zoning lots# which are contiguous or would be contiguous but for their separation by a #street#, which tract of land is to be #developed# as a unit regardless of ownership, the underlying district #yard# requirements may be modified as-of-right along portions of #streets# or #lot lines# wholly within such #development# provided that the site plan for the entire #development# shall be recorded in the land records and indexed against all #zoning lots# in the #development#.~~

~~The permitted modifications are as follows:~~

~~(a) No #front yards# are required; however, if a #front yard# is provided it shall be either 10 feet or less or 18 feet or more in depth. To determine the maximum height of the front #building# wall, the #front lot line# shall be used for measurement of the #sky exposure plane#.~~

~~(b) For #single-# or #two-family residences# a #side yard# equivalent may be substituted for the #side yards# required by Section 107-462 (Side yards) and side setback required by Section 23-664. A #side yard# equivalent is that area bounded by the #side lot line#, the prolongation of the front #building# wall, the side #building# wall and the prolongation of the rear #building# wall. The #side yard# equivalent permits the same obstructions as does a #side yard#. When the underlying district regulations would require two #side yards#, the total #side yard# equivalent shall be divided along both #side lot lines# of the #zoning lot#.~~

~~For a one- or two-#story detached residence#, the #side yard# equivalent shall have an area of at least 15 times the depth of the #building# measured perpendicular to the #street# and shall have an area of at least 20 times the depth of the #building# for a three- or 4-#story detached residence#.~~

~~For all other #residential buildings# the #side yard# equivalent shall be an area of not less than 10 times the depth of the #building# for a one- or two-#story building# and an area of not less than 15 times the depth of the #building# for a three- or four-#story building#.~~

~~In all cases where a #side yard# equivalent is provided, it shall have a minimum width of not less than 5 feet.~~

107-467
Modifications of special yard regulations for certain zoning lots

On application, the City Planning Commission may, by certification, modify the underlying #rear yard# regulations and the requirements of Section 107-466 (Special yard regulations for certain zoning lots) and thereby allow #single-# or #two-family residences# to be built on the #side# or #rear lot line#, provided the following conditions are satisfied:

(a) When a #building# is located on the #side lot line#, the entire required #side yard# equivalent shall be provided along the other #side lot line# of the same #zoning lot#. On the adjacent #zoning lot# there shall be a #side yard# of at least 10 feet, abutting the #building# wall which is located on the #side lot line#.

* * *

The City Planning Commission shall also find that:

(1) such modifications of #side# or #rear yards# or equivalents blend harmoniously with the entire ~~#development#~~ development;

(2) there is no adverse effect with regard to adequate light and air to the #residences#;

(3) such modification results in the maximum preservation of trees;

(4) there is an agreement which provides access for maintenance of the #building# wall located on the #lot line#; and

(5) a condition to the grant of any certification shall be that the requirements of Section 107-92 (Recordation) have been satisfied.

107-468
Court regulations

For any ~~#residential~~ building# containing #residences# not more than one #story# in height, the area of an #inner court# shall not be less than 225 square feet and the minimum dimension of such #inner court# shall not be less than 15 feet.

For any ~~#residential~~ building# containing #residences# more than one #story# in height, the area of an #inner court# shall not be less than 400 square feet and the minimum dimension of such #inner court# shall not be less than 20 feet.

~~This #court# provision may~~ No court regulations shall apply to #single-# and #two-family detached residences#.

* * *

107-481
Planting provisions along Residence District boundaries

For any #commercial# or #manufacturing-#development# on a #zoning lot# adjoining a #Residence District# boundary, there shall be in the open area required by the provisions of Sections 33-29 and 43-30 (SPECIAL PROVISIONS APPLYING ALONG DISTRICT BOUNDARIES), along the #lot line# adjoining the #Residence District#, a strip at least four feet wide, densely planted with evergreen shrubs at least four feet high at the time of planting and complying with the provisions applicable to screening for parking areas as set forth in Section 107-483 (Planting and screening for open parking areas).

107-482
Landscaped buffer for manufacturing development adjacent to residences

Where an existing #residential use# is located adjacent to a proposed #manufacturing# or #commercial-#development#, the developer shall plant along that part of the #side# or #rear lot line# adjacent to a #residential use#, a row of evergreen shrubs at least four feet high at the time of planting and which are of a type which may be expected to form a year-round dense screen at least six feet high within three years, or trees selected from APPENDIX B and spaced at 10 feet on center. Such screening shall be maintained in good condition at all times.

* * *

107-62
Yard, Court and Parking Regulations

For any ~~#development#~~ #zoning lot#, the City Planning Commission may authorize variations in the #yard# or #court# regulations as set forth in Section 107-46 or in the location of parking, driveway or curb cut regulations as set forth in Sections 23-44 (Permitted Obstructions in Required Yards or Rear Yard Equivalents), 25-621 (Location of parking spaces in certain districts), 25-622 (Location of parking spaces in lower density growth management areas)and 25-631 (Location and width of curb cuts in certain districts) for the purpose of allowing proper arrangements of #buildings#, driveways or required parking areas so as to avoid the destruction of existing topography and individual trees of six-inch caliper or more. #Rear yard#, #side yard# or #side yard# equivalent variations shall not be authorized on the periphery of a ~~#development#~~ development unless acceptable agreements are jointly submitted for #development# of two or more adjacent #zoning lots# by the owners thereof, incorporating the proposed #yard# or #side yard# equivalent variations along their common #lot lines#.

As a condition for granting such authorizations, the Commission shall find that the proposed placement of #buildings# and arrangement of #open spaces# will not have adverse effects upon light, air and privacy on adjacent #zoning lots#.

107-63
Minimum Distance between Buildings

For any ~~#residential~~ development# containing #residences#, the City Planning Commission may authorize the location of #buildings#, on a single #zoning lot# without regard for spacing between #buildings# regulations, provided that the resultant spacing will not be reduced beyond an amount considered appropriate by the Commission and in no case by more than 15 percent of that required by Section 23-71 (Minimum Distance between Buildings on a Single Zoning Lot).

* * *

107-65
Modifications of Existing Topography

For any #development# or #site alteration#, the ~~The~~ City Planning Commission may authorize modifications of the natural topography existing on September 11, 1975 beyond the amount specified in Section 107-31 (Topographic Regulations), provided that the Commission finds that:

(a) #development# on the #zoning lot# is not feasible without such modifications;

(b) such modification of topography is necessary to accommodate public amenities, such as public pedestrian ways, the #waterfront esplanade# or active recreational facilities within a #designated open space# as required under the provisions of this Chapter;

(c) such modification will not cause unnecessary disturbance of the drainage pattern in the area; and

(d) such modified topography will have minimal impact on the existing natural topography of the surrounding area and will blend harmoniously with it.

Where a permit for land contour work or topographic modification is required from the Department of Transportation or the Department of Buildings, the City Planning Commission and other such agencies shall jointly determine the conditions under which such topographic modification may be permitted so as best to serve the purposes of the Special District, in accordance with the provisions of Section 107-91 (Inter-agency Coordination).

107-66

Developments Partly within Designated Open Space

107-661
Modification of permitted obstructions

For #~~residential~~ developments# containing #residences# on #zoning lots# partly within #designated open space#, the City Planning Commission, on application, may modify the requirements of Section 107-45 (Required Open Space for Residences) to permit more than 50 percent of the required #open space#, not within the #designated open space#, to be occupied by driveways, private streets, open #accessory# off-street parking spaces or open #accessory# off-street loading berths, if the Commission finds that such facilities are so arranged and landscaped as to afford an acceptable standard of amenity for the #development# ~~or #enlargement#~~ and its surroundings.

107-662
Modification of required yards of building setbacks

On application, the City Planning Commission may grant an authorization modifying the #building# setback requirements of Section 107-251 (Special provisions for arterials), provided that the Commission finds that:

(a) the area of that portion of the #zoning lot# which is designated as #designated open space# on the District Plan in Appendix A of this Chapter, is at least equal to the area of the required #building# setback #front yard# or #yards#, or portion thereof, which is waived;

(b) along any #front lot line# abutting an #arterial#, a front setback shall be provided having a depth to be determined by the Commission and which shall be improved in accordance with a landscape plan approved by the Commission; and

(c) #building# placement leaves adequate spaces for the provision of #street# trees.

107-67
Uses and Bulk Permitted in Certain Areas

107-671
In Areas F and K

In Areas F and K, as shown in the District Plan in Appendix A of this Chapter, the City Planning Commission may authorize one or more #uses# in the Use Groups specified in this Section not permitted by the underlying district regulations.

As a condition for such authorization, the Commission shall find that:

(a) such #uses# are so located as not to impair the essential character of the surrounding area for its future ~~#development#~~ development;

(b) the minimum #lot area# of a #zoning lot# on which such #uses# are located is at least 20 acres;

(c) vehicular access and egress for such ~~#development#~~ proposed #uses# are located and arranged so as to draw a minimum of vehicular traffic to and through local #streets# in nearby ~~#residential#~~ residential areas; and

(d) where vehicular access and egress are located on an #arterial#, such location affords the best means for controlling the flow of traffic generated by such ~~#development#~~ proposed #uses# to and from such #arterial#.

In each case the Commission may prescribe additional conditions and safeguards, including requirements for adequate screening, planting or landscaping.

Areas (as designated on the District Map)	Permitted Use Groups
F	12
K	7A 7B 7D 7E

107-672
In Area SH

The City Planning Commission may authorize #developments# ~~or #enlargements#~~ that will result in more than 250 #dwelling units# of #non-profit residences for the elderly# in Area SH, as shown on the District Plan in Appendix A of this Chapter, provided such #developments# ~~or #enlargements#~~ comply with the #use# and #bulk# regulations of R3-2 Districts, except that the maximum #floor area ratio#, maximum #lot coverage# and minimum required #open space# shall be as set forth for R3-2 Districts in Section 23-141 (Open space and floor area regulations in R1, R2, R3, R4 and R5 Districts), as modified by this Chapter. The provisions of Section 23-147 (For non-profit residences for the elderly) shall not apply.

In order to grant such authorization, the Commission shall find that:

(a) such #developments# ~~or #enlargements#~~ are part of a superior site plan;

(b) such #residences# are compatible with the character of the surrounding area; and

(c) the #streets# providing access to such #residences# are adequate to handle the traffic generated thereby or provision has been made to handle such traffic.

107-68
Modification of Group Parking Facility and Access Regulations

For a permitted #commercial#, #community facility# or #manufacturing use#, the City Planning Commission may authorize more than 30 #accessory# off-street parking spaces, and for any #use#, may modify access restrictions with regard to curb cuts as set forth in paragraph (a) of Section 107-251 (Special provisions for arterials) or paragraph (a) of Section 107-252 (Special provisions for park streets). In order to grant such authorization, the Commission, upon a review of the site plan, shall find that:

(a) vehicular access and egress are located and arranged so as to draw a minimum of vehicular traffic to and through local #streets# in nearby ~~#residential#~~ residential areas;

* * *

107-72
Qualification of Designated Open Space as Lot Area

For any #development# containing #designated open space#, the City Planning Commission may allow the amount of #designated open space# to be counted as #lot area# for #bulk# computations to exceed the amount permitted under Section 107-224.

As a condition for granting a permit for such modifications, the Commission shall find that:

(a) that for the occupants of the site itself, the ill effects of concentration of #buildings# or #accessory# off-street parking are avoided or overcome by the manner in which the #buildings# are sited and #yards# and other open areas arranged; and

(b) that the concentration of #buildings# or activities will not adversely affect any other #zoning lot# outside the ~~#development#~~ development by restricting access of light and air, impairing privacy or creating traffic congestion.

* * *

107-74
Modification of Permitted Use Regulations

For any #development# ~~within the Special District~~, the Commission may grant special permits to allow #semi-detached# or #attached single-family residences# in R2 Districts and #attached single-# or #two-family residences# in R3-1 Districts. As a condition for granting such special permits, the Commission shall find that:

* * *

107-75
Modification of Underlying R1-1 District Regulations

For any #development#, the ~~The~~ Commission may grant special permits for the modifications of underlying R1-1 District regulations on #yards# or #courts# where such modifications are appropriate in order to:

* * *

107-77
Community Facility Buildings or Treatment Plants Permitted in Designated Open Space

The City Planning Commission may grant special permits for the construction of sewage disposal plants or pumping stations or #community facility uses# listed in Section 78-352 (Bonus for community facility space) in #designated open space# where such #uses# are permitted by the underlying district regulations provided the Commission finds that:

* * *

(c) such added open area shall contain natural (aquatic, botanic, geologic or topographic) features that are equal or better in quality to those displaced by the ~~new~~ #development#; and

(d) sewage disposal plants and sewage pumping stations meet the requirements of Section 74-731 (Sewage disposal plants and pumping stations).

The City Planning Commission may prescribe appropriate conditions and safeguards to enhance the character of the #designated open space#.

* * *

107-823
Common open space

Approval by the City Planning Commission of a development plan incorporating #designated open space# as common #open space# shall be conditioned upon the findings required in Section 78-52 (Common Open Space), except that the Commission may waive or modify any requirements of paragraph (g) of Section 78-52.

Notwithstanding any provision in Article VII, Chapter 8 or elsewhere in this Zoning Resolution, if the City of New York acquires title or a less than fee interest in any #designated open space# which serves as required #open space# for a ~~#residential~~ development# and the acquisition occurs while the #development# is under construction or after it is completed, it shall not affect the area's qualifications for satisfying #open space# requirements for #zoning lots# in the

~~#development#~~ development.

* * *

107-90
SPECIAL ADMINISTRATIVE PROVISIONS

107-91
Inter-agency Coordination

Where an authorization or permit for a #site alteration# or #development# is required from the City Planning Commission pursuant to this Chapter and where a permit is required from the Department of Transportation or Department of Buildings for land contour work, or from the Department of Environmental Protection for a storm water drainage system for #buildings# or adjacent areas, or where construction of a public improvement project is undertaken by a City agency, the Department of City Planning and the agencies involved shall jointly determine the conditions under which such proposed #development# or #site alteration# will best meet the purposes of the #Special South Richmond Development District#. Applications for any required permit or authorization shall be filed simultaneously with each agency from which the permit or authorization is required. ~~Where differences exist among agencies concerning proposed #development# or #site alteration# within the Special District, an Inter-agency Board of Coordination for South Richmond shall arbitrate prior to the issuance of any permit.~~

~~Such Board shall consist of the following:~~

~~the Deputy Mayor;~~

~~the Chairperson of the City Planning Commission;~~

~~the Commissioner of the City agency or agencies directly involved; and~~

~~the Borough President.~~

~~The Deputy Mayor shall be the Chairperson of the Board.~~

* * *

Article X - Special Purpose Districts
Chapter 9
Special Little Italy District

* * *

109-01
Definitions

For the purposes of this Chapter, matter in italics is defined in Section 12-10 (DEFINITIONS) or Section 109-01 (Definitions).

~~Special Little Italy District~~
~~(repeated from Section 12-10)~~

~~The "Special Little Italy District" is a Special Purpose District, designated by the letters "LI", in which special regulations set forth in Article X, Chapter 9 apply to all #developments#, #enlargements#, changes of #use#, #extensions# and alterations as set forth therein. The #Special Little Italy District# and its regulations supplement or supersede those of the districts on which it is superimposed.~~

Open recreation space

"Open recreation space" is that part of a #zoning lot#, including #courts#, #yards# and roof areas, which is unobstructed from its lowest level to the sky except for landscaping and planting requirements pursuant to Sections 109-14, 109-34 and 109-42.

109-02
General Provisions

In harmony with the general purposes and intent of this Resolution and the general purposes of the #Special Little Italy District# and in accordance with the provisions of this Chapter, certain specified regulations of the districts on which the #Special Little Italy District# are superimposed are made inapplicable, and special regulations are substituted therefore in this Chapter.

Except as modified by the express provisions of this Special District, the regulations of the underlying zoning district remain in effect. For the purposes of this Chapter, the provisions of Sections 23-14, 23-20 and 33-13 are made inapplicable ~~for any #development# or #enlargement# within the #Special Little Italy District#~~.

The use of the public #streets# and sidewalks for the maintenance of #sidewalk cafes#, outdoor cafes or any other structures shall require the separate approval of the Board of Estimate, which may be granted upon such terms and conditions as the Board of Estimate may deem appropriate.

<u>Within the Special District, in accordance with a comprehensive survey of its structures, #buildings# of special significance to the community and City as a whole, have been identified and are listed in Appendix B. Such #buildings# are unique either because they are socially or traditionally significant or because they are important physical influences in the life and image of the community. Such #buildings# shall not be demolished or have their external architectural features altered except as set forth in Section 109-52 (Special Permit Provisions). No demolition permit or alteration permit for alterations which may affect the exterior of such #buildings# shall be issued by the Department of Buildings for any such #building# except as permitted by the City Planning Commission pursuant to Section 109-52 (Special Permit Provisions) unless it is an unsafe #building# and demolition is required pursuant to the provisions of Title 28, Chapter 2, Article 216 of the New York City Administrative Code.</u>

* * *

109-10
PRESERVATION AREA (Area A)

The provisions of ~~the~~ this Section shall apply ~~to all #developments#, #enlargements#, #extensions#, alterations, or changes of #use# as set forth herein~~ within Area A (Preservation Area) as shown on the District Plan (APPENDIX A).

* * *

109-112
Special use regulations for ~~new~~ developments

For any ~~new #development#~~ #building# or portion of a #building developed# or #enlarged# after February 3, 1977 within Area A, #uses# listed in the underlying district regulations are permitted except that such #uses# shall not include those listed in Use Groups 6D, 8C, 10, and 12D, unless authorized by the City Planning Commission pursuant to Section 109-514 (Modifications by authorization).

109-12
Bulk Regulations

109-121
Floor area regulations

~~For any #development# or #enlargement# w~~ Within Area A, the maximum #floor area ratio# for a #zoning lot# ~~#residential#, #commercial#, #community facility# or #mixed buildings#~~ shall not exceed the following:

Lot Type	Maximum Permitted #Floor Area Ratio#
#Corner lots#	4.8
#Interior# or #through lots#	4.1

109-122
Lot coverage, through lot and rear yard regulations

~~For any #development# or #enlargement# w~~ Within Area A, the maximum #lot coverage# for a #zoning lot# shall not exceed the following percentages:

Lot Type	Maximum #Lot Coverage# (in percent)
#Corner lot#	70
#Interior lot#	60
#Through lot#, except as provided below	60

However, when a #through lot# is #developed# with more than one #building#, the maximum #lot coverage# on such #through lot# may be increased from 60 percent to 70 percent, provided that no portion of any #building# ~~location~~ on such #zoning lot# penetrates the "Rear Height Limit Plane," as set forth in this Section. The Rear Height Limit Plane shall begin at a point 23 feet above #curb level# and shall be located 30 feet away from, and on both sides of, the line equidistant from the two #street lines#. The slope of the Rear Height Limit Plane shall be 2.7 feet vertical to 1 foot horizontal. All ~~new~~ #buildings developed# after February 3, 1977 shall have a

~~minimum 30 foot~~ #rear yard# with a depth of not less than 30 feet.

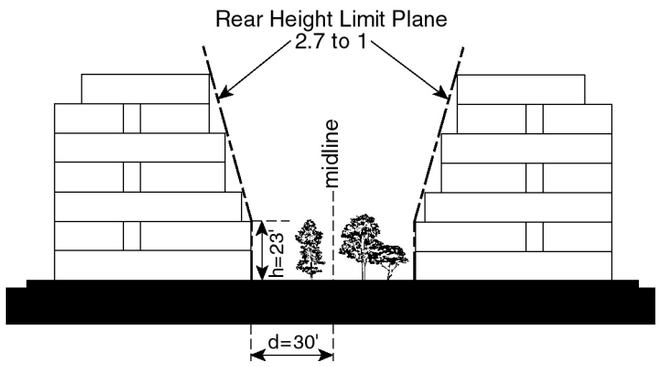

REAR HEIGHT LIMIT PLANE

* * *

109-124
Height and setback regulations

The maximum height of any ~~new~~ #building or other structure# ~~or portion thereof~~ shall not exceed 75 feet or seven #stories# above the #curb level#, whichever is less, unless allowed by the City Planning Commission pursuant to Section 109-514.

However, the provisions of this Section shall not apply to #enlargements# if, prior to (date of amendment), a building permit has been lawfully issued authorizing such construction.

109-13
Special Front Wall Regulations

109-131
Building facades

The front building wall of any ~~#development# or #enlargement#~~ #building# shall extend along the full length of its #front lot line# not occupied by existing #buildings# to remain and shall rise without setback up to ~~the~~ a height of six #stories# or 65 feet, or the height of the #building#, whichever is less. Above that height, the front building wall shall set back at least 10 feet. Front wall recesses are permitted provided that the aggregate length of such recesses, excluding window fenestration, at the level of any #story# does not exceed 25 percent of the length of the front wall where such recesses are permitted. In the event that a #development# occupies an entire ~~#street#~~ #block# frontage, additional recesses are permitted provided that there are no front wall recesses within 10 feet of the intersection of two #street lines#. The exterior building materials of the front wall shall be predominantly of masonry.

109-132
Treatment of the ground level wall

For #buildings developed# after February 3, 1977, and for #buildings enlarged# on the ground floor level after February 3, 1977, at ~~At~~ least 25 percent of the total surface area of the entire front wall of a #development# or the #enlarged# portion, up to a height of 12 feet above #curb level# or to the ceiling of the ground #story#, whichever is higher, shall be transparent. Transparent areas may include storefronts subject to Section 109-50. Door or window openings within such surface areas shall be considered transparent. Such opening shall have a minimum width of two feet. In addition, any portion of such building wall 20 feet or more in length, which contains no transparent areas at ground floor level, shall be covered with vines or similar planting in permitted front wall recesses, or be treated so as to provide visual relief from large expanses of

blank walls. Planting shall consist of shrubs, ivy or creepers and shall be planted in soil having a depth of not less than 2 feet, 6 inches, and a minimum width of 24 inches.

109-14
Open Recreation Space and Landscaping Regulations

109-141
Open recreation space regulations

For any ~~new #development# or #enlargement#~~ #building# or portion of a #building developed# or #enlarged# after February 3, 1977, a minimum of 20 percent of the #lot area# of the #zoning lot# shall be provided as usable landscaped #open recreation space# accessible to the occupants of such #development# or #enlargement#. Such #open recreation space# may be accessible to the public.

Such #open recreation space# shall be located at the ground level and/or the roof level. However, if such #open recreation space# is located both at the ground level and at the roof level, not less than 40 percent may be located at either location. Such #open recreation space# shall be landscaped and properly maintained in accordance with the provisions of Section 109-142.

109-142
Landscaping regulations

The required #open recreation space#, as provided in Section 109-141, on a #zoning lot# containing a #development# or #enlargement# shall be landscaped and maintained in the following manner.

Ground level #open recreation space# shall:

(a) have a minimum dimension of 20 feet for a ~~new~~ #development# and 10 feet for an #enlargement#, measured perpendicular to its perimeter;

* * *

109-15
Regulations for Rehabilitation or Conversion of Existing Buildings

When #residential buildings# or #residential# portions of #mixed buildings# are rehabilitated, the density regulations of the underlying districts shall not apply. In lieu thereof, there shall be not more than one #room# for each 230 square feet of gross #floor area# within the rehabilitated #residential building# or #residential# portion of a #mixed building#.

Furthermore, when a #non-~~#~~ residential building#, or portion thereof, is #converted# for #residential use#, the density regulations of the underlying districts shall not apply to that portion of the #building# containing #dwelling units#. In lieu thereof, there shall be not more than one #room# for each 230 square feet of gross #floor area# provided within the #converted~~-~~#building# or portion thereof.

* * *

109-21
Use Regulations

The provisions of Section 109-11 (Special Use Regulations) shall apply, except that in order to retain the existing retail character of the area, the ground floor of any ~~new #development# or #enlargement#~~ #building# shall be limited to #uses# listed in Section 109-211 (Use Group LI). Any #street# frontage occupied by entrances to other #uses# such as #residential# lobbies shall be no wider than 25 feet. A change of #use# on the ground floor of a~~n existing~~ #building# shall

be subject to the provisions of this Section.

109-211
Use Group LI

Use Group LI comprises a group of specially selected #uses# to strengthen the existing #commercial# character of the area.

* * *

---

* A change of #use# in an ~~existing~~ #building# constructed prior to February 3, 1977 which does not comply with the frontage requirements is permitted provided the degree of #non-compliance# of the frontage is not increased.

109-22
Bulk Regulations

109-221
Floor area regulations

~~For any #development# or #enlargement# w~~ Within Area A1, the maximum #floor area ratio# on a #zoning lot# shall not exceed the following:

	#Floor Area Ratio#	
#Use#	#Corner Lot#	#Through Lot# or #Interior Lot#
#Commercial ~~building# or #commercial# portion of a #mixed building# or any #building# containing #commercial# and #community facility uses#~~	5.1	4.5
#Community facility ~~building# or #community facility# portion of a #mixed building#~~	~~4.1~~	~~3.5~~
~~#Residential building#~~ or #residential# ~~portion of a #mixed building#~~	4.1	3.5

The maximum #floor area# in a #mixed building# shall be the maximum #floor area# permitted for either the #commercial# portion of such #building#, or the #community facility# portion of such #building# or the #residential# portion of such #building# as set forth in this Section, whichever permits the greatest amount of #floor area#.

* * *

109-23
Storefronts in New Buildings and Alterations of Existing Storefronts

Storefronts ~~installed~~ in ~~new~~ #buildings##developed# after February 3, 1977, in portions of

#buildings# located on the ground floor that are #enlarged# after February 3, 1977, and ~~any alteration done to~~ any existing storefronts that are altered, shall comply with the following standards:

(a) #show windows# shall have a sill height of not more than 2 feet, 6 inches above #curb level# and extend to a maximum height between 8 feet, 0 inches and 10 feet, 0 inches above #curb level#.

(b) the storefront shall have transparent areas no more than 10 feet in width, measured horizontally, and which transparent areas shall be separated by a mullion of no less than 6 inches in width; and

(c) storefront entrance doors shall be set back a minimum of 2 feet, 0 inches behind the vertical surface of the #show windows#.

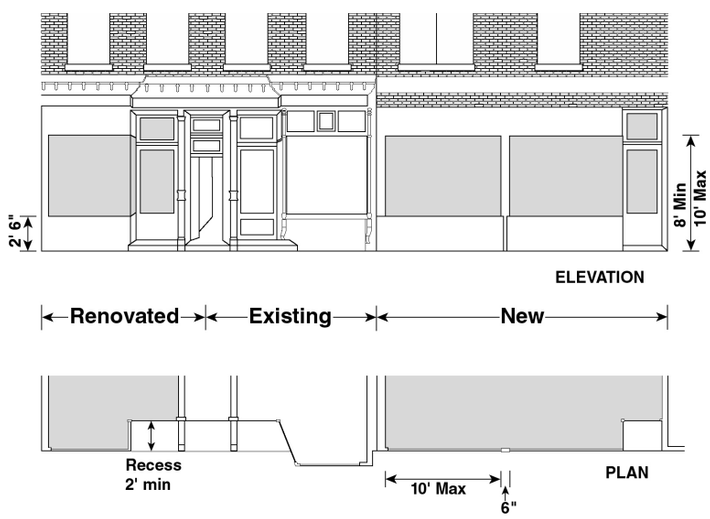

STOREFRONT ILLUSTRATION

* * *

109-312
Special use regulations for new development

For any ~~new #development#~~ #building# or portion of a #building developed# or #enlarged# after February 3, 1977 within Area B, #uses# listed in the underlying district regulations are permitted, except that such #uses# shall not include those listed in Use Groups 6D, 8C and 12D.

109-32
Bulk Regulations

The #bulk# regulations of the underlying district shall apply to ~~any #development# or #enlargement# in~~ the Houston Street Corridor (Area B) except as set forth in this Section.

109-321
Floor area regulation

~~For any #development# or #enlargement#, the~~ The maximum #floor area ratio# permitted on a #zoning lot# is 7.52 for #residential use#, 6.0 for #commercial use# and 7.5 for #community facility use#. In no event shall the total #floor area ratio# for all #uses# exceed 7.52.

109-322
Lot coverage regulations

For any ~~#residential#, #commercial# or community facility #development# or #enlargement#~~ #zoning lot# within Area B, the maximum #lot coverage# shall not exceed the following percentages:

Lot Type	Maximum #Lot Coverage# (in percent)
#Corner lot#	80
#Interior# or #through lot#	70

109-323
Height and setback regulations

The #street wall# of any ~~#development# or #enlargement#~~ #building# for the first two #stories# or 23 feet, whichever is greater, shall be located on the #street line# and extend the entire length of the #street line# of the #zoning lot# not occupied by existing #buildings# to remain. However, at the intersection of two #street lines#, the #street wall# may be located anywhere within an area bounded by the two #street lines# and lines parallel to, and 10 feet from each #street line#. No #street wall# shall be required along a #street line# bounding any portion of a #zoning lot# which is less than 25 feet in depth measured from the #street line# of a #wide street#.

* * *

109-34
Open Recreation Space and Landscaping Requirements

~~Except as provided in this Section, for~~ For any ~~new #development# or #enlargement#~~ #building developed# or #enlarged# after February 3, 1977, a minimum of 20 percent of the #lot area# of the #zoning lot# shall be provided as usable, landscaped #open recreation space#, accessible to the occupants of such #development# or #enlargement# or to the public. Such #open recreation space# shall be located either at the ground level and/or roof level, and shall be landscaped and properly maintained in accordance with the provisions of Section 109-142 (Landscaping regulations).

* * *

109-352
Curb cut regulations

~~For any #development#, there~~ There shall be not more than one curb cut on each #street line# frontage of ~~the~~ a #zoning lot#.

* * *

109-40
BOWERY, CANAL, KENMARE STREET CORRIDOR (AREA C)

~~The Bowery, Canal, Kenmare Street Corridor, as shown on the District Plan in Appendix A, has a substantial concentration of industrial and commercial activities which generate heavy truck traffic. Therefore, the regulations of the underlying district shall apply to Area C except as hereinafter modified.~~ The provisions of this Section are applicable within Area C, as shown on the District Plan (APPENDIX A).

109-41
Bulk Regulations

109-411
Height and setback regulations

The maximum height of any ~~new~~ #building or other structure# ~~or portion thereof~~ shall not exceed 85 feet or eight #stories# above #curb level#, whichever is less, ~~and~~ unless authorized by the City Planning Commission pursuant to Section 109-514. The front building wall ~~of any #development# or #enlargement#~~ shall extend along the full length of ~~its~~ the #front lot line# not occupied by existing #buildings to remain and shall rise without setback.

109-412
Lot coverage regulations

~~For any #development# or #enlargement# within~~ Within Area C, the maximum #lot coverage# for any #zoning lot# shall be:

	Above Ground Floor (in percent)	At Ground Floor Only (in percent)
#Residential Use#	60	60
#Commercial Use#	70	100

109-42
Open Recreation Space and Landscaping Requirements

All ~~#residential developments#~~ #buildings developed# after February 3, 1977 that contain #residences# shall provide a minimum of 20 percent of the #lot area# of the #zoning lot# as usable landscaped #open recreation space# in conformance with the requirements of Section ~~109-14~~ 109-142 (~~Open Recreation Space and~~ Landscaping Regulations).

109-43
Additional Requirements

Any #zoning lots# partially located within 100 feet of the #street line# of Mulberry Street (Area A1) shall comply with the requirements set forth in Sections 109-211 (Use Group LI), 109-23 (Storefronts in New Buildings and Alterations of Existing Storefronts) and 109-24 (Sign Regulations).

* * *

109-514
Modifications by authorization

Modifications of the provisions of this Chapter may be authorized by the City Planning Commission based upon receipt of an ~~development~~ application, ~~subject to approval by the Board of Estimate, or its successor,~~ except that there shall be no modifications of any provision of Section 109-12, 109-22, 109-32, or 109-41 unless specifically allowed therein, provided that the Commission, after notification to the affected Community Board, certifies to the Commissioner of Buildings that there exists a compelling need for such modification and that such modifications are consonant with the objectives of the #Special Little Italy District#. The Commission may prescribe other appropriate conditions and safeguards to minimize adverse effects on the surrounding area.

* * *

109-522
Special provisions for the preservation of certain existing buildings

~~Within the Special District, in accordance with a comprehensive survey of its structures, #buildings# of special significance to the community and City as a whole, have been identified and are listed in Appendix B. Such #buildings# are unique either because they are socially or traditionally significant or because they are important physical influences in the life and image of the community. Such #buildings# shall not be demolished or have their external architectural features altered except as set forth in this Section. No demolition permit or alteration permit for alterations which may affect the exterior of such #buildings# shall be issued by the Department of Buildings for any such #building# except as permitted by the City Planning Commission unless it is an unsafe #building# and demolition is required pursuant to the provisions of Chapter 26, Title C, Part I, Article 8 of the New York City Administrative Code.~~

#Buildings# listed in Appendix B shall not be demolished or have their external architectural features altered except as set forth in this Section.

* * *

109-523
Applications for special permit

An application to the City Planning Commission for the grant of a special permit respecting provisions of Sections 109-16 and 109-351 of this Chapter, shall include: a site plan showing the location and proposed #use# of all #buildings or other structures# on the site; the location of all vehicular entrances and exits and off-street parking and loading spaces; the amount and nature of traffic to be generated by such #development# or #enlargement# and an indication of the routes that will provide vehicular access to a #manufacturing#, #commercial#or #community facility# establishment; and such other information as may be required by the Commission.

* * *

Article XI - Special Purpose Districts
Chapter 2
Special City Island District

112-00
GENERAL PURPOSES

The "Special City Island District" established in this Resolution is designed to promote and protect public health, safety, general welfare and amenity. These general goals include, among others, the following specific purposes:

(a) to promote and strengthen the unique character of the Special City Island District for nautical and waterfront activities by limiting permitted uses to those which complement and enhance the existing character of the Special District;

(b) to maintain the existing low-rise residential and commercial character of the district by regulating the height of ~~new~~ buildings;

(c) to maintain and protect the environmental quality and "village" character of City Island Avenue by imposing special controls on building setbacks and signs; and

(d) to promote the most desirable use of land in this area and thus to conserve the value of land and thereby protect the City's tax revenue.

112-01
Definitions

Development

For purposes of this Chapter, a "development" includes both #development# and ~~the construction of a new #building or other structure# on a #zoning lot#, the relocation of an existing #building# on another #zoning lot#, the #use# of a tract of land for a new #use#, or an~~ #enlargement# as defined in Section 12-10 (DEFINITIONS). ~~A change of #use# in an existing #building# to another #use# listed in the same or another Use Group shall be considered a #development# only as to that being changed and only for purposes of Section 112-07 (Special Use Regulations).~~

* * *

112-06
District Plan

The District Plan for the #Special City Island District# identifies those areas within the Special District in which there are special height restrictions ~~on #developments# or #enlargements#~~. The District Plan is set forth in Appendix A and is made an integral part hereof.

112-07
Special Use Regulations

Within the Special District, and notwithstanding the provisions of Article V, Chapter 2, where #commercial# or #manufacturing uses# are permitted by the underlying district regulations, such #commercial# or #manufacturing uses# shall be limited to those #uses# set forth in this Section. This Section shall apply to a new #use# in a #development# and to a change of #use# in an existing #building# to another #use# listed in the same or another Use Group.

112-071
Uses permitted in C1 Districts

~~For any #development# within~~ Within a C1 District, all #uses# permitted in Use Groups 1, 2, 3, 4, 5 and 6, as listed in Sections 32-11 to 32-15, are permitted, except:

Court houses

Electric and gas substations

Public utility stations

Telephone exchanges.

Additional permitted #uses# are:

Custom manufacturing and sale of jewelry, ceramics, art and needlework, limited to 10,000 square feet per establishment.

112-072
Uses permitted in C2 Districts

~~For any #development# within~~ Within a C2 District, all #commercial uses# listed in Section 112-071 (Uses permitted in C1 Districts) are permitted as well as all #uses# permitted as-of-right in C2 Districts, as set forth in Section 32-10, except:

Automobile sales, including motorcycle and #trailer#

Prisons

Refreshment stands, drive in

Wholesale establishments.

112-073
Uses permitted in C3 Districts

~~For any #development# within~~ Within a C3 District, Use Groups 1, 2, 3 and 4 in Sections 32-11 to 32-13 and all #commercial uses# listed in Use Group 14 in Section 32-23 are permitted, as well as:

#Boatels#

Eating or drinking places, including those that provide outdoor table service or incidental musical entertainment ~~either by mechanical device or by not more than three persons playing piano, accordion, guitar or any string instrument~~.

112-074
Ground floor use restrictions on certain blocks

For all #buildings# fronting on City Island Avenue between Bay Street and Carroll Street, only non-#residential uses# shall be permitted on the ground floor level or within #stories# that have a floor level within five feet of #curb level#, except for #residential# lobbies.

112-075
Uses permitted in M1 Districts

~~For any #development# within~~ Within an M1 District, all #uses# listed in Use Groups 4B, 5, 6, 7, 9, 10, 11, 12, 13, 14, 15, 16A and 17 are permitted, except:

Automobile sales, including motorcycle and #trailer#

Bottle works

Cotton ginning or cotton wadding or linters

Fuel, ice, coal or wood establishments with open storage

Manufacturing of autos, trucks or #trailers# including parts

Motorcycle manufacturing, including parts

Motorcycle or motor scooter rental

Poultry or rabbit killing establishments

Prisons

Public transit or railroad substations

Public utility stations

Railroads including rights-of-way

Refreshment stands, drive in

Telephone exchanges

Truck weighing scales

Trucking terminals and motor freight stations.

112-08
Uses Permitted by Special Permit

In C1, C2 or C3 Districts, the City Planning Commission may permit #automotive service stations#, auto repair establishments, #public parking garages# or #public parking lots#. As a condition for permitting such #use#, the Commission shall make the following findings:

(a) that such #use# is so located as to draw a minimum of vehicular traffic to and through local #streets# in nearby ~~#residential#~~ residential areas;

(b) that such #use# has adequate reservoir space at the vehicular entrance to accommodate a minimum of 10 cars or 20 percent of the spaces so provided, whichever amount is less; and

(c) that, where roof parking is permitted, such roof parking is so located as not to impair the essential character or future ~~#use# or #development#~~ use or development of adjacent areas.

The Commission may prescribe appropriate conditions and safeguards to minimize adverse effects on the character of the surrounding area, including limitations on #signs# or requirements for the shielding of floodlights or for setback of any roof parking areas from #lot lines#.

* * *

112-103
Special height and setback regulations

The underlying height and setback regulations shall apply, except that no ~~new #development# or~~

~~#enlargement#~~ #building or other structure# shall exceed a height limit of 35 feet, and the height ~~of all #buildings or other structures#~~ shall be measured from the #base plane#. Such height and setback regulations may be modified only by authorization or special permit of the City Planning Commission, as applicable, pursuant to Sections 112-106 or 112-107.

112-104
Special transparency requirements along City Island Avenue

For #buildings# with ground floor #commercial# or #community facility uses# fronting upon City Island Avenue, the provisions of this Section shall apply to any #street wall# of such #building# facing City Island Avenue. At least 50 percent of the total surface area of such wall between #curb level# and 12 feet above #curb level#, or to the ceiling of the ground floor, whichever is less, or to the full height of the wall if such wall is less than 12 feet in height, shall be transparent. The lowest point of any transparency that is provided to satisfy this requirement shall not be higher than two feet, six inches above #curb level#.

In addition, solid security gates that are swung, drawn or lowered to secure #commercial# or #community facility uses# ~~premises~~ shall be prohibited. All security gates installed after September 30, 2003 shall, when closed, permit visibility of at least 75 percent of the area covered by such gate when viewed from the #street#.

112-106
Authorization for modification of height and setback regulations

The City Planning Commission may authorize, within Area B, as shown on the District Plan Map in Appendix A, modifications of the underlying height and setback regulations, provided the Commission finds that:

(a) the distribution of the #bulk# of ~~a #development# or #enlargement#~~ the #building# on the #zoning lot# permits adequate access of light and air to the surrounding #streets# and properties and does not impair the views of and to the water;

(b) the modification of the ~~building~~ height of the #building# permits better site planning and distribution of #open space#; and

(c) the height of the ~~new #development# or #enlargement#~~ #building# does not exceed 35 feet.

The Commission may prescribe appropriate conditions and safeguards to protect the views of and to the water and to minimize adverse effects on the surrounding area. That portion of any ~~#development# or #enlargement#~~ #zoning lot# used for boat sales, manufacture, storage or repair shall be exempt from the provisions of this Section.

112-107
Special permit for modification of height and setback regulations

The City Planning Commission may permit, within Area A, as shown on the District Plan Map in Appendix A, modifications of the underlying height and setback regulations, provided the Commission finds that:

(a) the distribution of the #bulk# of ~~a #development# or #enlargement#~~ the #building# on the #zoning lot# permits adequate access of light and air to the surrounding #streets# and properties and does not impair the views of and to the water;

(b) the modification of the ~~building~~ height of the #building# permits better site planning and distribution of #open space#; and

(c) the height of the ~~new #development# or #enlargement#~~ #building# does not exceed 50

feet.

The Commission may prescribe appropriate conditions and safeguards to protect the views of and to the water and to minimize adverse effects on the surrounding area. That portion of any ~~#development# or #enlargement#~~ #zoning lot# used for boat sales, manufacture, storage or repair shall be exempt from the provisions of this Section.

* * *

112-111
Accessory parking for commercial uses

For any #commercial# or mixed ~~#use~~ use #development# except for eating or drinking establishments, one off-street #accessory# parking space shall be provided for every 300 square feet of #commercial~~-~~#floor area#. The provisions of Section 73-45 (Modification of Off-Site Parking Provisions) are hereby made inapplicable.

112-112
Accessory parking and floor area requirements for eating or drinking establishments

After July 10, 1985, ~~for any application filed with the Department of Buildings or the Department of Business Services,~~ for any #development#, ~~#enlargement#,~~ #extension# or change of #use# involving an eating or drinking establishment that, in the aggregate, results in an increase of more than 150 square feet of #floor area#, one off-street #accessory# parking space shall be provided for each 150 square feet of the total of the existing and new #floor area#.

* * *

112-113
Reservoir space requirements for eating and drinking establishments

All #developments#, #extensions~~#, #enlargements#~~ or changes of #use# involving an eating or drinking establishment with attendant-operated parking services shall provide adequate on-site reservoir space at the vehicular entrances to accommodate automobiles equivalent in number to 10 percent of the total number of spaces, but in no event shall such reservoir space be required for more than 10 automobiles. Reservoir space shall be delineated by painted stripes or lines pursuant to the standards of the Department of Buildings.

* * *

112-13
~~Location of~~ Zoning ~~District Boundaries~~ Applicability at the Shore Line

112-131
Location of zoning district boundary lines

Zoning district boundary lines shall coincide with the shore line lawfully existing on November 13, 1981, or any natural or lawful alteration thereof.

112-132
Naturally or lawfully altered shorelines and development rights on piers

A zoning district boundary line which intersects the shore line lawfully existing on November 13, 1981, shall be prolongated, in a straight line, to such naturally or lawfully altered shore line. Lawfully approved piers or other lawfully approved structural extensions of the shore line, as may be so altered, shall not generate development rights; however, #uses accessory# to the principal upland permitted #use#, except for off-street parking, shall be permitted.

112-14
Special Requirements for Waterfront Access

Except in R1 and R2 Districts, for ~~#residential~~ developments# containing #residences# on #waterfront zoning lots# of 65,000 square feet or more, a publicly accessible waterfront sitting area shall be provided. Such sitting area shall abut the #shoreline#, have a minimum area of 2,500 square feet, a minimum depth of 50 feet measured from the #shoreline# and contain at least one linear foot of seating for every 100 square feet of public access area. ~~Building entrances~~ Entrances of #buildings# may not front upon such sitting area.

Such sitting area shall be accessible by means of either a direct connection to a public sidewalk or a public way through the #zoning lot# directly connecting the sitting area with a public sidewalk. Such public way shall be comprised of a planting strip of at least four feet in width containing one tree of at least three-inch caliper for every 25 linear feet of length of such way, and a paved sidewalk of at least six feet in width or, for #developments# with #private roads#, sidewalks provided in accordance with the requirements for #private roads#, as set forth in Article II, Chapter 6.

Such public access areas shall comply with the provisions of Sections 62-74 (Requirements for Recordation), 62-70 (MAINTENANCE AND OPERATION REQUIREMENTS FOR WATERFRONT PUBLIC ACCESS AREAS), 62-651 (Guardrails, gates and other protective barriers), 62-652 (Seating) and 62-654 (Signage).

The Chairperson of the City Planning Commission shall certify to the Department of Buildings or Department of Business Services, as applicable, that a site plan has been submitted showing compliance with the provisions of this Section.

* * *

Article XI - Special Purpose Districts

Chapter 3
Special Ocean Parkway District

* * *

~~**113-01**~~
~~**Definitions**~~

~~Special Ocean Parkway District~~
~~(repeated from Section 12-10)~~

~~The "Special Ocean Parkway District" is a Special Purpose District designated by the letters "OP" in which special regulations set forth in Article XI, Chapter 3 apply. The #Special Ocean Parkway District# appears on the #zoning map# superimposed on other districts and its regulations supplement or modify those of the districts on which it is superimposed.~~

~~The Subdistrict of the #Special Ocean Parkway District# is identified in Appendix A in Article XI, Chapter 3. In addition to the requirements of Sections 113-10 through 113-40, the special regulations set forth in Sections 113-50 through 113-57, inclusive, shall apply to the subdistrict.~~

113-02
General Provisions

In harmony with the general purposes of the #Special Ocean Parkway District# and in accordance with the provisions of this Chapter, certain specified regulations of the districts on which the #Special Ocean Parkway District# is superimposed are made inapplicable and special regulations are substituted therefor. Except as modified by the express provisions of the Special District the regulations of the underlying districts remain in force.

The Subdistrict of the #Special Ocean Parkway District# is identified in Appendix A in Article XI, Chapter 3. In addition to the requirements of Sections 113-10 through 113-40, the special regulations set forth in Sections 113-50 through 113-57, inclusive, shall apply to the subdistrict.

113-10
SPECIAL BULK REGULATIONS

113-11
Special Bulk Regulations for Community Facilities

All community facility ~~#developments# and #enlargements#~~ #buildings# or portions #buildings# containing #community facility uses# shall be subject to the applicable underlying district #bulk# regulations of Article II, Chapter 3 (Bulk Regulations for Residential Buildings in Residence Districts) except as provided below:

(a) in R2X Districts, the #residential bulk# regulations of an R3-1 District shall apply to #community facility buildings#;

(b) in R6 or R7 Districts with a letter suffix, the applicable #bulk# regulations set forth in Article II, Chapter 4 (Bulk Regulations for Community Facility Buildings in Residence Districts) shall apply;

(c) in the subdistrict the #bulk# regulations of Article II, Chapter 3 shall apply except as set forth in Section 113-503 (Special bulk regulations) ~~shall apply~~; and

(d) in R6 or R7 Districts without a letter suffix, community facility #bulk# regulations of Article II, Chapter 4, may be made applicable by certification of the City Planning

Commission pursuant to Section 113-41 (Certification for Community Facility Uses on Certain Corner Lots).

113-12
Special Front Yard Regulations

For all ~~#developments#~~ #zoning lots# with frontage along Ocean Parkway there shall be 30 foot #front yard#. No obstructions including porches either open or enclosed, canopies or stairs are permitted within the #front yard#. Any driveway within such #front yard# shall be perpendicular to the #street line# or in the case where the #street wall# is not parallel with the #street line# the driveway shall be perpendicular to the #street wall#.

Balconies pursuant to Section 23-13 may, by a depth of not more than 6 feet, penetrate #front yards# except along Ocean Parkway.

113-20
SPECIAL PARKING AND OFF-STREET LOADING REGULATIONS

113-21
Special Parking Regulations

For all ~~new~~ #developments# having frontage on Ocean Parkway all required or permitted #accessory# off-street parking spaces shall be #completely enclosed#.

113-22
Special Off-Street Loading Regulations

(a) For any ~~#development#, #enlargement# or change of #use#, all or part of which is used as~~ #building# containing a #school# for children below grade 7, off-street loading facilities shall be provided in accordance with the requirements of this Section. Such off-street loading facilities shall be so situated and arranged to provide head-in and head-out movement of vehicles on two separate #streets#, and shall have a minimum dimension of 12 feet. All such off-street loading facilities shall be screened from adjacent #zoning lots# by a four foot buffer of shrubbery that is at least four feet high at the time of planting.

(b) For ~~any #development#, #enlargement# or change of #use# which is used as a~~ other #schools# with no children below grade 7, ~~and is not otherwise subject to the provisions of paragraph (a),~~ an off-street loading facility shall be provided with a minimum dimension of 12 by 18 feet.

* * *

113-40
CERTIFICATIONS AND AUTHORIZATIONS FOR COMMUNITY FACILITIES

113-41
Certification for Community Facility Uses on Certain Corner Lots

Within the #Special Ocean Parkway District#, the City Planning Commission may allow, by certification, community facility #developments# or #enlargements# or changes of #use# containing #community facility uses# to exceed the #bulk# regulations of Section 113-11 (Special Bulk Regulations for Community ~~Facility Developments~~ Facilities) when located on #corner lots# one #lot line# of which is the #street line# of a #wide street#, provided that ~~the Commission and the Board of Estimate finds that~~:

(a) the #community facility building# will comply with the #bulk# regulations of Article II,

Chapter 4 (Bulk Regulations for Community Facility Buildings in Residence Districts); and

(b) the scale of the proposed #community facility building# is appropriate to the scale of the surrounding #development#.

The City Planning Commission and the Board of Estimate may prescribe appropriate conditions and safeguards to minimize adverse effects on the character of the surrounding area.

113-42
Authorization for Enlargements of Community Facility Buildings

Within the #Special Ocean Parkway District#, the City Planning Commission may authorize #enlargements# that exceed the #bulk# limitations of Section 113-11 (Special Bulk Regulations for Community ~~Facility Developments~~ Facilities), provided:

(a) the existing #building# is a #community facility building developed# prior to December 19, 1996;

(b) the existing #community facility building# is located partially or wholly on a #corner lot#, one #lot line# of which is the #street line# of a #wide street#;

(c) the #enlarged community facility building# will comply with the #bulk# regulations of Article II, Chapter 4 (Bulk Regulations for Community Facility Buildings in Residence Districts); and

(d) the scale of the proposed #community facility building# is appropriate to the scale of the surrounding ~~#development#~~ area.

The Commission may prescribe appropriate conditions and safeguards to minimize adverse effects on the character of the surrounding area.

113-50
THE SUB-DISTRICT

* * *

113-503
Special bulk regulations

For #single-# and #two-family detached# and #semi-detached residences#, and for #zoning lots# containing both #community facility# and #residential uses#, certain underlying district #bulk# regulations are set forth in Article II, Chapter 3 (Bulk Regulations for Residential Buildings in Residence Districts) ~~are~~ except as superseded by those set forth in Sections 113-51 through 113-55. The regulations applicable to a #predominantly built-up area# shall not apply in the subdistrict.

For #community facility buildings#, ~~certain underlying district~~ the #bulk# regulations of Article II, Chapter 3 ~~set forth in Article II, Chapter 4 (Bulk Regulations for Community Facility Buildings in Residence Districts),~~ are superseded by those set forth in Sections 113-51 (Maximum Permitted Floor Area Ratio), ~~113-52 (Density Regulations)~~, 113-542 (Minimum required front yards), 113-543 (Minimum required side yards), 113-544 (Minimum required rear yards) and 113-55 (Height and Setback Regulations). The provisions of Sections 24-01 (Applicability of this Chapter) and 24-04 (Modification of Bulk Regulations in Certain Districts) pertaining to R4-1 Districts shall not apply in the subdistrict.

* * *

113-53
Lot Area, ~~and~~ Lot Width and Density Regulations

The regulations set forth in Section 23-31 (Minimum Lot Area or Lot Width for Residences) pertaining to R4-1 Districts shall apply to #residential uses#. The regulations set forth in Section 24-20 (APPLICABILITY OF DENSITY REGULATIONS TO ZONING LOTS CONTAINING BOTH RESIDENTIAL AND COMMUNITY FACILITY USES) pertaining to R4 Districts shall apply to #buildings# used partly for #residence# and partly for #community facility use#.

113-54
Yard Regulations

113-541
Permitted obstructions in required yards or rear yard equivalents

For permitted #residential uses#, the provisions of Section 23-44 (Permitted Obstructions in Required Yards or Rear Yard Equivalents) shall apply with the following modifications:

(a) open #accessory# off-street parking spaces shall not be located within a #front yard# unless such spaces are located in a permitted #side lot ribbon#;

(b) ~~the provisions pertaining to projections~~ three-foot overhangs in~~to~~ a required 18 foot #front yard# in R4 or R5 Districts shall ~~be inapplicable~~ not be permitted; and

(c) balconies shall not be a permitted obstruction in #rear yards# or #rear yard equivalents#.

* * *

113-543
Minimum required side yards

The regulations set forth in Section 23-461 (Side yards for single- or two- family residences) pertaining to R4A Districts shall apply to #detached ~~residences# and #community facility~~ buildings#. The regulations in that Section pertaining to R4-1 Districts shall apply to #semi-detached residences#.

For an existing #single-# or #two-family residence# with a #non-complying side yard#, an #enlargement# involving a straight line extension of the existing #building# walls facing such #non-complying side yard# is permitted provided that:

(a) the portion of the #building# which is #enlarged# complies with the height and setback regulations set forth in Section 113-552;

(b) the minimum distance between such #building# wall and the nearest #building# wall or prolongation thereof on an adjoining #zoning lot# across the common #side lot line# is eight feet;

(c) the #enlarged building# does not contain more than two #dwelling units#;

(d) that there is no encroachment on the existing #non-complying side yard# except as set forth in this Section; and

(e) the #enlargement# does not otherwise result in the creation of a new #non-compliance# with the applicable #bulk# regulations.

* * *

113-545
Special provisions for ~~party or~~ side lot line walls

The regulations set forth in Section 23-49 (Special Provisions for ~~Party or~~ Side Lot Line Walls) pertaining to R4-1 Districts shall apply.

113-55
Height and Setback Regulations

The height and setback regulations of a #~~residential~~ building or other structure# in the subdistrict shall be as set forth in Section 23-631, for #buildings or other structures# in R4A Districts, except that paragraph (b)(2) shall be modified as follows:

> Each perimeter wall of the #building or other structure# may have one or more apex points directly above it on the 35 foot high plane. (See Figure B).

* * *

113-562
Parking requirements

One #accessory# off-street parking space shall be provided for each #dwelling unit# created ~~by a #development#, an #enlargement# or a conversion~~ after August 3, 1993. This requirement may be waived for a #single-family residence# on an #interior zoning lot# that has a width of less than 25 feet along a #street#.

* * *

Article XI - Special Purpose Districts

Chapter 4
Special Bay Ridge District

* * *

114-01
General Provisions

In harmony with the general provisions and intent of this Resolution and the general purposes of the #Special Bay Ridge District#, the regulations of the districts upon which this Special District is superimposed are supplemented or modified in accordance with the provisions of this Chapter. The provisions of this Chapter shall apply to all ~~#developments# and #enlargements#~~ #buildings#.

Except as modified by the provisions of this Chapter, the regulations of the underlying districts remain in effect.

* * *

114-11
Special Floor Area Regulations

~~In the #Special Bay Ridge District#,~~ In C8-2 Districts, for any #zoning lot#, the maximum #floor area ratio# for any ~~#community facility buildings# or any portion of a #building# containing a~~ #community facility use# shall not exceed ~~1.65 in R4A, R4-1, R4B and R5B Districts and~~ 3.0 ~~in C8-2 Districts~~.

In R4A, R4-1, R4B or R5B Districts, the #bulk# regulations of Article II, Chapter 4 shall apply only to a #building# that is used entirely for #community facility use#, except that the maximum #floor area ratio# shall not exceed 1.65. For a #building that is used partly for #community facility use# and partly for #residential use#, the #bulk# regulations of Article II, Chapter 3, shall apply to all portions of such #building#, except that where:

(a) such #community facility use# has received tax-exempt status from the New York City Department of Finance, or its successor, pursuant to Section 420 of the New York State Real Property Tax Law, or

(b) such #building# has received an authorization pursuant to Section 24-04 (Modifications of Bulk Regulations in Certain Districts)

the #bulk# regulations of Article II, Chapter 4 shall apply to the #community facility# portion of such #building#, provided that the maximum #floor area ratio# for the #community facility use# shall not exceed 1.65.

* * *

114-122
Maximum building height and setback

In the #Special Bay Ridge District#, the height and setback and the maximum #building# height regulations of the underlying districts have been modified as follows:

(a) In C8-2 Districts

In C8-2 Districts, the maximum height of a #building or other structure# shall be 70 feet. Any portion of a #building or other structure# that exceeds a height of 60 feet shall be set back with a depth of at least ten feet from a #wide street line# and at least 15 feet from a #narrow street line#.

(b) For #Community Facilities# in #~~Residential# Districts~~ #Residence Districts#

In R3A, R3X, R3-2, R4A, R4-1, R4B and R5B Districts, the maximum height of a #building or other structure# containing #community facility uses# shall not exceed 32 feet.

Article XI - Special Purpose Districts

Chapter 5
Special Downtown Jamaica District

115-00
GENERAL PURPOSES

The "Special Downtown Jamaica District" established in this Resolution is designed to promote and protect the public health, safety and general welfare of the Downtown Jamaica community. These general goals include, among others, the following specific purposes, to:

(a) strengthen the business core of Downtown Jamaica by improving the working and living environments;

(b) foster development in Downtown Jamaica and provide direction and incentives for further growth where appropriate;

(c) encourage the development of affordable housing;

(d) expand the retail, entertainment and commercial character of the area around the transit center and to enhance the area's role as a major transportation hub in the City;

(e) provide transitions between the downtown commercial core, the lower-scale residential communities and the transportation hub;

(f) improve the quality of ~~new~~ development in Downtown Jamaica by requiring the provision of specified public amenities in appropriate locations;

(g) encourage the design of new ~~development~~ buildings that ~~is~~ are in character with the area;

(h) enhance the pedestrian environment by relieving sidewalk congestion and providing pedestrian amenities; and

(i) promote the most desirable use of land and thus conserve and enhance the value of land and buildings, and thereby protect the City's tax revenues.

115-01
General Provisions

In harmony with the general purposes and content of this Resolution and the general purposes of the #Special Downtown Jamaica District#, the regulations of ~~the #Special Downtown Jamaica District#~~ this Chapter shall apply ~~to all #developments#, #enlargements#, alterations and changes of #use#~~ within the #Special Downtown Jamaica District~~#, except as otherwise provided in this Chapter~~. The regulations of all other Chapters of this Resolution are applicable except as modified, supplemented or superseded by the provisions of this Chapter. In the event of a conflict between the provisions of this Chapter and other regulations of this Resolution, the provisions of this Chapter shall control.

Any special permit granted by the City Planning Commission before September 10, 2007, may be started or continued, in accordance with the terms thereof, or as such terms may be subsequently modified, pursuant to the regulations in effect at the time such special permit was granted, subject to the provisions of Sections 11-42 (Lapse of Authorization or Special Permit Granted by the City Planning Commission Pursuant to the 1961 Zoning Resolution) and 11-43 (Renewal of Authorization or Special Permit).

* * *

115-13

Ground Floor Use, Frontage and Major Building Entrance Regulations in C4-5X and C6 Districts

On designated #streets#, as shown on Map 2 (Ground Floor Use and Transparency and Curb Cut Restrictions) in Appendix A of this Chapter, the special ground floor #use#, frontage and major #building# entrance regulations of this Section shall apply to any #building or other structure# fronting on such #streets#.

#Uses# within #stories# ~~located~~ on the ground floor or with a floor level ~~or~~ within five feet of the level of the adjoining sidewalk, and within 30 feet of the #street line#, shall be limited to #community facility uses# without sleeping accommodations, as listed in Section 115-15 (Modification of Use Regulations in M1-4 Districts), and #uses# listed in Use Groups 5, 6A, 6B, 6C, 6D, 7A, 7B, 8A, 8B, 8D, 9, 10, 11, 12A, 12B and 12C. A #building's~~–#~~ street# frontage shall be allocated exclusively to such #uses#, except for lobby space, entryways or entrances to subway stations.

In no event shall the length of #street# frontage occupied by lobby space, entrance space and/or a #building# entrance recess exceed, in total, 30 feet or 50 percent of the #building's# total #street# frontage, whichever is less.

For #buildings developed# or #enlarged# after September 10, 2007, where the ground floor of such #development# or #enlarged# portion of the #building# fronts upon
~~Any #development# or any #enlarged# portion of a #building# located on a #zoning lot# with frontage on~~ such designated #street#, such #development# or #enlargement# shall provide a major #building# entrance onto such #street#. However, #developments# or #enlargements# on #zoning lots# with frontage on more than one designated #street#, may provide a major #building# entrance on only one designated #street#.

115-14
Transparency Requirement in C4-5X and C6 Districts

For #buildings developed# or #enlarged# after September 10, 2007, where the ground floor of such #development# or #enlarged# portion of the #building# fronts upon
~~For any #development#, or for the #enlarged# portion of a #building#, on~~ designated #streets# as shown on Map 2 (Ground Floor Use and Transparency and Curb Cut Restrictions) in Appendix A of this Chapter, each ground floor #street wall# shall be glazed with transparent materials which may include #show windows#, glazed transoms or glazed portions of doors. Such glazed area shall occupy at least 50 percent of the area of each such ground floor #street wall# measured to a height of 10 feet above the level of the adjoining sidewalk.

115-15
Modification of Use Regulations in M1-4 Districts

The #use# regulations of the underlying M1-4 District shall apply, except as modified as follows:

* * *

Use Groups 16, 17 and 18

The following #uses# from Sections 32-25 (Use Group 16), 42-14 (Use Group 17) and 42-15 (Use Group 18) shall be permitted, provided that such #uses# are in #completely enclosed ~~-~~# buildings#, except as specifically modified in this Section.

* * *

115-21
Floor Area Ratio, Open Space and Lot Coverage

(a) Maximum #floor area ratio# for #~~buildings~~# #zoning lots# containing non-#residential uses#

In C6-2 and C6-3 Districts, the underlying #floor area ratio# and #open space# provisions shall not apply. In lieu thereof, the maximum #floor area ratio# permitted for #commercial# and #community facility uses#, separately or in combination, shall not exceed 6.0 in C6-2 Districts and 8.0 in C6-3 Districts. No #floor area# bonuses shall be permitted.

In C6-4 Districts, the underlying #floor area ratio# provisions, including #floor area# bonus provisions, shall apply to #community facility uses#. For #commercial uses#, the maximum #floor area ratio# shall be 12.0, and no #floor area# bonuses shall apply.

In M1-4 Districts, the maximum #floor area ratio# permitted for #commercial#, #community facility# or #manufacturing uses#, separately or in combination, shall be 2.0.

(b) Maximum #floor area ratio# for ~~#buildings#~~ #zoning lots# containing #residential uses#

The maximum #floor area ratio# for any ~~#building#~~ #zoning lot# containing a #residential use# shall not exceed the #floor area ratio# set forth in Section 115-211 (Special Inclusionary Housing regulations) for the applicable district.

(c) #Lot coverage#

In C4 and C6 Districts, for #residential buildings# or the #residential# portion of a #mixed building#, the maximum #lot coverage# shall be 80 percent on a #corner lot# and 70 percent on an #interior# or #through lot#. However, no #lot coverage# provisions shall apply to any #zoning lot# comprising an entire #block# or to any #zoning lot# comprising a #corner lot# of 5,000 square feet or less.

115-211
Special Inclusionary Housing regulations

(a) Applicability

R7A, R7X, C4-4A, C4-5X, C6-2, C6-3 and C6-4 Districts within the #Special Downtown Jamaica District# shall be #Inclusionary Housing designated areas#, pursuant to Section 12-10 (DEFINTIONS), for the purpose of making the Inclusionary Housing Program regulations of Section 23-90 (INCLUSIONARY HOUSING), inclusive, applicable as modified, within the Special District.

(b) Maximum #floor area ratio#

The maximum #floor area ratio# for any ~~#building#~~ #zoning lot# containing ~~#residences#~~ a #residential use# shall not exceed the base #floor area ratio# set forth in the following table, except that such base #floor area ratio# may be increased to the maximum #floor area ratio# set forth in Section 23-952 through the provision of #affordable housing#, pursuant to the provisions relating to #Inclusionary Housing designated areas# in Section 23-90, inclusive.

* * *

115-232
Street wall location

C4 C6

In the districts indicated, #street walls# shall be provided in accordance with the provisions of this Section.

* * *

(b) Map 3 (Street Wall Location) in Appendix A of this Chapter, specifies the #street# frontages where the regulations set forth in this paragraph, (b), apply.

* * *

(4) No #street wall# location requirements shall apply to any open space fronting on Sutphin Boulevard between 94th and 95th Avenues ~~#developed#~~ provided pursuant to the Jamaica Gateway Urban Renewal Plan, as shown on Map 3.

(5) For #building# walls facing Archer Avenue on Blocks 9988 and 9994, the #street walls# required pursuant to this paragraph, (b), shall not be located along the Archer Avenue #street line#, but shall instead be located along the northern boundary of the Public Place mapped on each such block. However, if the Public Place is not mapped on Block 9994, then the #street wall# shall be located on a line perpendicular to 147th Place and passing through a point 51.77 feet distant (as measured along the southwesterly #street line# of 147th Place) from the corner of the northeasterly #street line# of Archer Avenue and the southwesterly #street line# of 147th Place. To accommodate the #development# of a one #story building# which may be located within each Public Place, such #street walls# shall have no #building# entrances or windows up to a height of 30 feet within 100 feet of 147th Place on Block 9994 and within 100 feet of 146th Street on Block 9988.

* * *

115-233
Street wall height

C4 C6

Except in the locations indicated on Map 4 (Street Wall Height) in Appendix A of this Chapter, the minimum and maximum heights before setback of a #street wall# required pursuant to Section 115-222 (Street wall location) shall be as set forth in the following table:

District	Minimum #Street Wall# Height	Maximum #Street Wall# Height
C4-4A	40 feet	65 feet
C4-5X	40 feet	85 feet
C6	40 feet	60 feet

Any portion of a #building# that exceeds the maximum height of a #street wall# shall be set back at least 10 feet from a #wide street line# and at least 15 feet from a #narrow street line#.

In the locations indicated on Map 4, required #street walls# shall rise without setback to the minimum height specified for that location on Map 4 or the height of the #building#, whichever is less. Any portion of a #building# that exceeds the maximum #street wall# height specified for that location shall be set back at least 10 feet from a #wide street line# and at least 15 feet from a #narrow street line#.

However, in the locations indicated on Map 4 where no maximum #street wall# height or setback is required, #street walls# required pursuant to Section 115-~~222~~232 shall rise without setback to a minimum height of 40 feet or the height of the #building#, whichever is less. Above a height of 40 feet, no setbacks are required for any portion of the #building#.

115-234
Maximum building height

C4 C6

In C4-4A Districts, no #building or other structure# shall exceed a height of 80 feet.

In C4-5X Districts, no #building or other structure# shall exceed a height of 125 feet.

In C6-2 and C6-3 Districts, no #building or other structure# shall exceed a height of 250 feet. In C6-4 Districts, no #building or other structure# shall exceed a height of 290 feet. However, no maximum #building# height limitation shall apply on Block 9993, shown on Map 5 (Maximum Building Height) in Appendix A of this Chapter, if such #block# is #developed# or if a #building# on such #block# is #enlarged# pursuant to the Jamaica Gateway Urban Renewal Plan.

115-235
Transition area

R6 R7 R8 R9 R10

In the districts indicated, and in #Commercial Districts# where such #Residence District bulk# regulations are applicable, that portion of a ~~#development# or #enlargement#~~ #building# located within 25 feet of an adjacent #zoning lot# in an R1, R2, R3, R4 or R5 District shall not exceed a maximum ~~building~~ height of 35 feet. In addition, an open area not higher than #curb level# shall be provided within eight feet of such adjacent #zoning lot#. Such open area may be used for #accessory# parking.

* * *

115-32
Refuse Storage, Recreation Space and Planting Areas

All #~~residential~~ buildings# containing #residences# shall provide refuse storage space, recreation space and planting areas in accordance with the provisions of Sections 28-23 (Refuse Storage and Disposal) and 28-30 (RECREATION SPACE AND PLANTING AREAS), whether or not they are ~~#developed# or #enlarged# pursuant to the~~ #Quality Housing buildings# ~~Program~~.

115-40
RESIDENTIAL CONVERSIONS

In all #Commercial Districts#, the #conversion# to #dwelling units# of #non-~~#~~residential buildings#, or portions thereof, erected prior to January 1, 1977, shall be permitted subject to Sections 15-11 (Bulk Regulations), 15-12 (Open Space Equivalent) and 15-30 (Minor Modifications), paragraph (b).

#Uses# in #buildings# erected prior to January 1, 1977, containing both #residential# and non-#residential uses# shall not be subject to the provisions of Section 32-42 (Location within Building).

115-50
SPECIAL OFF-STREET PARKING AND OFF-STREET LOADING REGULATIONS

115-51
Parking and Loading Regulations

Within the #Special Downtown Jamaica District#, the off-street parking and loading regulations shall be modified as follows:

(a) Commercial and manufacturing ~~#development#~~ #uses#

* * *

(b) #Residential ~~#development#~~ uses#

(1) The provisions of Section 25-12 (Maximum Size of Accessory Group Parking Facilities) shall be modified to permit an #accessory group parking facility# to contain up to 300 off-street parking spaces. Pursuant to the provisions of Section 25-13 (Modification of Maximum Size of Accessory Group Parking Facilities), the Commissioner of Buildings may permit such #group parking facility# to contain up to 150 additional spaces.

(2) The required accessory off-street parking space regulations ~~for #residential developments# or #enlargements#~~ of the underlying districts in the #Special Downtown Jamaica District# shall be modified as follows: The regulations set forth for an R6A District in Section 25-20 shall apply. The regulations set forth for an R6 District in Sections 25-50 (RESTRICTIONS ON LOCATIONS OF ACCESSORY OFF-STREET PARKING SPACES), inclusive, and 25-60 (ADDITIONAL REGULATIONS FOR PERMITTED OR REQUIRED ACCESSORY OFF-STREET PARKING SPACES), inclusive, shall apply except as modified in paragraphs (b)(3) and (b)(4) of this Section.

(3) In all #Residence Districts#, the provisions of Section 25-26 (Waiver of Requirements for Small Number of Spaces) are modified as follows:

(i) The provisions of Section 25-26 shall only apply to #zoning lots# existing both on September 10, 2007 and on the date of application for a building permit.

(ii) For all ~~new~~ ~~#residential~~ developments# or #enlargements# containing #residences#, the maximum number of #accessory# off-street parking spaces for which requirements are waived shall be five spaces.

* * *

115-51
Parking and Loading Regulations

Within the #Special Downtown Jamaica District#, the off-street parking and loading regulations shall be modified as follows:

(a) #Commercial# and #manufacturing ~~#development#~~uses#

* * *

115-60
SPECIAL PERMIT TO MODIFY USE OR BULK REGULATIONS

For any ~~#development#, #enlargement#, alteration or change of #use# on a~~ #zoning lot# within the #Special Downtown Jamaica District#, the City Planning Commission may permit modification of the #use# or #bulk# regulations, except #floor area ratio# provisions, provided the Commission shall find that such:

(a) #use# or #bulk# modification will aid in achieving the general purposes and intent of the Special District;

(b) #use# modification will encourage a lively pedestrian environment along the #street# or mandatory sidewalk widening, or is necessary for, and the only practicable way to achieve, the programmatic requirements of the ~~#development#~~ development;

(c) #bulk# modifications will enhance the distribution of #bulk# on the #zoning lot#;

(d) #bulk# modifications will permit adequate access of light and air to surrounding #streets# and properties; and

(e) ~~#development# or #enlargement#~~ #use# or #bulk# modification will relate harmoniously to the character of the surrounding area.

The Commission may prescribe appropriate conditions and safeguards to minimize adverse effects on the character of the surrounding area.

* * *

Article XI – Special Purpose Districts
Chapter 6
Special Stapleton Waterfront District

116-00
GENERAL PURPOSES

The "Special Stapleton Waterfront District" established in this Resolution is designed to promote and protect public health, safety and general welfare. These general goals include among others, the following specific purposes:

(a) encourage design of ~~new~~ development that is in character with the neighborhood and surrounding community;

(b) maintain and reestablish physical and visual public access to and along the waterfront;

(c) strengthen the traditional town center of Stapleton by allowing the development of ~~new~~ residential and commercial uses;

(d) encourage the creation of a lively and attractive environment that will provide daily amenities and services for the use and enjoyment of the working population and the new residents;

(e) take maximum advantage of the beauty of the New York Harbor waterfront, thereby best serving the business community, the residential population and providing regional recreation; and

(f) promote the most desirable use of land and thus conserve and enhance the value of land and buildings, and thereby protect City tax revenues.

* * *

116-12
Mandatory Ground Floor Use and Frontage Requirements

The provisions of Section 32-433 (Ground floor use in C1, C2 and C4 Districts in the Borough of Staten Island) shall not apply in the #Special Stapleton Waterfront District#. However, on designated #streets# and #mandatory front building wall lines# in Subareas B3 and C, as shown on Map 2 in the Appendix to this Chapter, the special ground floor #use# and frontage regulations of this Section shall apply to any ~~#development# or #enlargement#~~ #building developed# or #enlarged# after October 25, 2006.

* * *

116-232
Street wall location

In Subarea A, the underlying #street wall# location regulations shall apply.

* * *

If more than one #building# is #developed# in Subareas B1, B2, B3 or B4, the first #building# shall be located along a Type 1 #mandatory front building wall line#. Subsequent #buildings# shall locate along a Type 2 #mandatory front building wall line# until 70 percent of the length of the #mandatory front building wall line# is occupied.

All #mandatory front building walls# shall rise without setback to a maximum height of 40 feet or the height of the #building#, whichever is less. A #building# may exceed a height of 40 feet, up to the maximum #building# height specified in Section 116-233 if a setback is provided at a minimum height of 35 feet. Such setback shall have a minimum depth of 10 feet and shall be measured from the front building wall. Recesses shall be permitted on the ground floor where

required to provide access to the #building#. Above the ground floor, up to 30 percent of the aggregate width of the front building wall may be recessed.

* * *

116-41
Upland Connections

* * *

(c) Permitted obstructions

The provisions of Section 62-611 (Permitted obstructions) shall apply to #upland connections# within the #Special Stapleton Waterfront District#. ~~Certain~~ The permitted obstructions listed in paragraph (b)(~~1~~2) of Section 62-611 are further subject to the tree and planting requirements of Section 62-655. Water-Dependent (WD) #uses# referenced in paragraph (~~e~~a)(6) of Section 62-611 shall be as listed in Section 62-211.

116-42
Visual Corridors

#Visual corridors# shall be provided ~~for #developments#~~ in the locations shown on Map 5 in the Appendix to this Chapter. Such #visual corridors# shall be subject to the requirements of Section 116-512 (Design requirements for visual corridors).

* * *

116-54
Refuse Storage Areas

Refuse shall be stored within a #completely enclosed ~~#~~ building#.

* * *

Article XI - Special Purpose Districts
Chapter 7
Special Long Island City Mixed Use District

117-00
GENERAL PURPOSES

The "Special Long Island City Mixed Use District" established in this Resolution is designed to promote and protect the public health, safety and general welfare of the Long Island City community. These general goals include, among others, the following specific purposes:

(a) support the continuing growth of a mixed residential, commercial and industrial neighborhoods by permitting expansion and ~~new~~ development of residential, commercial, community facility and light manufacturing uses where adequate environmental standards are assured;

(b) encourage the development of moderate to high density commercial uses within a compact transit-oriented area;

(c) strengthen traditional retail streets in Hunters Point by allowing the development of new residential and retail uses;

(d) encourage the development of affordable housing;

(e) promote the opportunity for people to work in the vicinity of their residences;

(f) retain jobs within New York City;

(g) provide an opportunity for the improvement of Long Island City; and

(h) promote the most desirable use of land and thus conserve the value of land and buildings and thereby protect City tax revenues.

* * *

117-02
General Provisions

In harmony with the general purposes and content of this Resolution and the general purposes of the #Special Long Island City Mixed Use District#, the regulations of ~~the Special District~~ this Chapter shall apply ~~to all #developments#, #enlargements#, alterations and changes of #use#~~ within the #Special Long Island City Mixed Use District#~~, except as otherwise provided in this Chapter~~. The regulations of all other Chapters of this Resolution are applicable except as modified, supplemented or superseded by the provisions of this Chapter. In the event of a conflict between the provisions of this Chapter and other regulations of this Resolution, the provisions of this Chapter shall control.

(a) Notwithstanding the provisions of Section 54-40 (DAMAGE OR DESTRUCTION IN NON-COMPLYING BUILDINGS), when a #building# that existed on October 25, 1995, within the Hunters Point or Court Square Subdistricts, is damaged or demolished by any means, it may be reconstructed to its #bulk# prior to such damage or destruction or to the #bulk# permitted by this Chapter, whichever is greater.

(b) For ~~#developments# or #enlargements# containing both #residential# and non-#residential uses#~~ #mixed use buildings#~~, or for changes in #use# that would result in a #building# occupied by #residential# and non-#residential uses#, the #residential use#~~ #dwelling units# or #rooming units# shall be located on a #story# or #stories# above the highest #story# occupied, in whole or in part, by a non-#residential use#. Non-#residential uses# may, however, be located on the same #story#, or on a #story# higher than that occupied by ~~#residential uses#~~ #dwelling units# or #rooming units#, provided

that the non-#residential uses#:

(1) are located in a portion of the #mixed use building# that has separate direct access to the #street# with no access to the #residential# portion of the #building# at any #story#; and

(2) are not located directly over any portion of the #building# containing #dwelling units# or #rooming units#.

(c) Regulations relating to #accessory# parking facilities, #public parking lots# and #public parking garages# within the Hunters Point Subdistrict, the Court Square Subdistrict and the Queens Plaza Subdistrict are set forth in Article I, Chapter 3 (Comprehensive Off-Street Parking Regulations in Community Districts 1, 2, 3, 4, 5, 6, 7 and 8 in the Borough of Manhattan and in Portions of Community Districts 1 and 2 in the Borough of Queens) and such provisions are further modified by Section 117-54 (Off-street Parking and Loading Regulations).

(d) In the granting of special permits or authorizations within the #Special Long Island City Mixed Use District#, the City Planning Commission may prescribe additional appropriate conditions and safeguards to minimize adverse effects on the character of the surrounding uses.

(e) Where references are made to #block# numbers within this Chapter, such numbers are to be found on the maps appended to this Chapter.

(f) In areas within the #Special Long Island City Mixed Use District# that are not within a Subdistrict, the regulations of the underlying zoning district shall apply.

* * *

117-23
Street Wall Location in Certain Designated Districts

R6B M1-4/R6A M1-4/R7A M1-5/R8A M1-4/R6B M1-4/R7X

In the districts indicated, the #street wall# of any ~~#development# or #enlargement#~~ #building# containing #residences# shall be located no closer to nor further from the #street line# than the #street wall# of an adjacent existing #building#. However, the #street wall# of a #building# need not be located further from a #street line# than 15 feet. On #corner lots#, the #street wall# along one #street line# need not be located further from the #street line# than five feet. Recesses, not to exceed three feet in depth from the #street line# or eight feet in depth where ramps for the physically disabled are required, shall be permitted on the ground floor where required to provide access to the #building#.

Existing #buildings# may be vertically enlarged by up to one #story# or 15 feet without regard to the #street wall# location provisions of this Section.

117-30
SPECIAL PROVISIONS FOR C1 AND C2 DISTRICTS

117-31
Special Use Regulations

For ~~#residential developments# or #enlargements#~~ #buildings# containing #residences#, #uses# on the ground floor shall be limited to non-#residential uses# and lobby space. Not more than 8,000 square feet of the ground floor shall be devoted to #uses# listed in Use Group 6B.

117-32

Special Bulk Regulations

~~For #developments# or #enlargements#, any~~ All #street walls# shall be built coincident with the #street line#.

117-40
COURT SQUARE SUBDISTRICT

117-401
General provisions

The regulations governing ~~#developments#, #enlargements#, #extensions# or changes of #use# within~~ the Court Square Subdistrict of the #Special Long Island City Mixed Use District# are contained within Sections 117-40 through 117-45, inclusive. These regulations supplement the provisions of Sections 117-01 through 117-03, inclusive, of the #Special Long Island City Mixed Use District# and supersede the underlying districts.

Mandatory subway improvements are elements of the Subdistrict Plan which shall be built by the developer of the #zoning lot# to which they apply.

~~For the purposes of the mandatory subway improvements in the Subdistrict, the #floor area# of the #development# or #enlargement# shall be the total amount of #floor area# resulting from #developments# or #enlargements# after August 14, 1986.~~

~~For the purposes of the mandatory subway improvements in the Subdistrict, any tract of land consisting of two or more contiguous lots of record under single ownership or control as of March 1, 1986, shall be considered a single #zoning lot#.~~

* * *

117-42
Special Bulk and Use Regulations in the Court Square Subdistrict

~~#Developments# or #enlargements# containing at least 70,000 square feet of #floor area# on~~ #Z~~z~~oning lots# of at least 10,000 square feet with #buildings# containing at least 70,000 square feet of #floor area# are subject to the provisions of the underlying C5-3 District, as modified by Sections 117-40 through 117-45, inclusive.

~~Other #developments# or #enlargements#~~ All other #zoning lots# are subject to the #use# provisions of the underlying C5-3 District and the #bulk# provisions of an M1-4/R6B designated district pursuant to the regulations of Article XII, Chapter 3 (Special Mixed Use District), as modified by Sections 117-00 through 117-22, inclusive.

117-421
Special bulk regulations

(a) #Developments# or #enlargements# on #zoning lots# that meet the ~~minimum #floor area# and #zoning lot#~~ standards of Section 117-44 and provide mandatory subway improvements as required by Section 117-44, may be #developed# or #enlarged# to a #floor area ratio# of 15.0. #Developments# or #enlargements# on #zoning lots# that do not meet the minimum standards of Section 117-44 shall not exceed the maximum #floor area ratio# of the M1-4/R6B designated district for the applicable #use#.

* * *

117-422
Sign regulations

All requirements of Section 32-60 (SIGN REGULATIONS) shall apply, except for Sections 32-642 (Non-illuminated signs), 32-644 (Illuminated or flashing signs in C4, C5-4, C6 or C7 Districts) and 32-655 (Height of signs in all other Commercial Districts).

Non-#illuminated#, #illuminated# or #flashing signs# are permitted with a total #surface area# (in square feet) not exceeding five times the #street# frontage of the #zoning lot#, in feet, but in no event shall the total #surface area# exceed 500 square feet for #interior# or #through lots# or 500 square feet on each frontage for #corner lots#.

No permitted #sign# shall extend above #curb level# at a height greater than 60 feet.

A #non-conforming sign# may be replaced pursuant to Section 52-82 (Non-Conforming Signs other than Advertising Signs), except that the height, location or position of the replacement #sign# may be changed by up to 10 feet, measured from the perimeter of the original #non-conforming sign#.

117-423
Sidewalk widening

For any #development# or #enlargement# on Block 3 with a #building# wall facing 45th Road, a sidewalk widening of five feet shall be provided on 45th Road between 23rd Street and Jackson Avenue. Such sidewalk widening shall be a continuous, paved open area along the #front lot line# of the #zoning lot# at the same elevation as the adjoining sidewalk and directly accessible to the public at all times. Such sidewalk widening shall be unobstructed from its lowest level to the sky except for temporary elements of weather protection, such as awnings or canopies, provided that the total area (measured on the plan) of such elements does not exceed 20 percent of the sidewalk widening area, and that such elements and any attachments thereto are at least eight feet above #curb level#, and that any post or other support for such element or any attachment to the support has a maximum horizontal dimension of six inches. No #street# trees, vehicle storage, parking or trash storage is permitted on such sidewalk widening.

117-44
Mandatory Subway Improvements

For the purposes of mandatory subway improvements, any tract of land consisting of two or more contiguous lots of record under single ownership or control as of March 1, 1986, shall be considered a single #zoning lot#.

Subway improvements are required for qualifying #developments# or #enlargements#, as follows:

(a) #Zoning lots# with at least 5,000 square feet of #lot area#

#Developments# or #enlargements# on #zoning lots# with 5,000 square feet or more of #lot area#~~, which front~~ located on Block 1 and fronting on a sidewalk containing a sidewalk entrance~~(s)~~ to the ~~E and V subway lines~~ Queens Boulevard Line, 23rd Street-Ely Avenue Station, shall relocate the stairway or entrance(s) to such subway onto the #zoning lot# in accordance with the provisions of Section 37-40 (OFF-STREET RELOCATION OR RENOVATION OF A SUBWAY STAIR), with the exception that, in addition to the waivers provided by Section 37-44, the additional standards for location, design and hours of public accessibility contained in Section 37-41 may be waived upon a finding by the Metropolitan Transportation Authority that ~~they~~ such standards are undesirable or unnecessary to ensure a good overall design.

(b) #Zoning lots# with at least 10,000 square feet of #lot area#

For the purposes of this paragraph (b), the #floor area# of the #development# or #enlargement# shall be the total amount of #floor area# constructed after August 14,

1986.

#Developments# or #enlargements# on Blocks 1, 2 or 3, identified in Appendix B (Court Square Subdistrict Plan Map and Description of Improvements) of this Chapter, containing at least 70,000 square feet of #floor area# on #zoning lots# of at least 10,000 square feet of #lot area# shall provide mandatory subway improvements as described, in Appendix B, in paragraph (a) for Block 1, paragraph (b) for Block 2 and paragraph (c)(1) for Block 3.

In addition, on Block 3, any #development# or #enlargement# containing at least 300,000 square feet of #floor area# or any #development# or #enlargement# on a #zoning lot# of at least 30,000 square feet of #lot area# shall provide all the mandatory subway improvements for the Block, as described in paragraphs (c)(1) and (c)(2) for Block 3.

* * *

117-45
Developer's Notice

As a condition to the issuance by the Department of Buildings of an excavation or building permit for a #development# or #enlargement# on a #zoning lot# requiring a mandatory subway improvement:

(a) the developer shall have submitted to the Chairperson of the City Planning Commission:

(1) written notice of its intention to #develop# or #enlarge# on a #zoning lot# in the Court Square Subdistrict, the #floor area# of such #development# or #enlargement#, and the mandatory subway improvements which the developer shall construct;

(2) drawings, including but not limited to plans, sections, elevations, three-dimensional projections or other drawings deemed necessary or relevant by the Chairperson of the City Planning Commission for the mandatory subway improvements within the designated #zoning lot#; and

(3) waivers, consents, agreements or other legal instruments obligating the developer, its heirs and devisees, successors and assigns, ~~#to develop#~~ to develop its property in accordance with the Subdistrict Plan and the provisions of this Chapter; and

(b) within 90 days of such submission by the developer, the Chairperson of the City Planning Commission shall certify to the Department of Buildings and the developer receipt of the aforesaid documents and the developer's compliance, or non-compliance, with the requirements of the Subdistrict Plan.

* * *

117-503
Definitions

Definitions specifically applicable to the Queens Plaza Subdistrict of the #Special Long Island City Mixed Use District# are set forth in this Section. Other defined terms are set forth in Section 117-01 (Definitions) of the #Special Long Island City Mixed Use District# and Section 12-10 (DEFINITIONS).

Accessory use

In addition to those #accessory uses# listed in Section 12-10, for the purposes of this Section, an #accessory use# shall also include a #dwelling unit# in connection with any commercial, manufacturing or community facility establishment permitted in the Queens Plaza Subdistrict of the #Special Long Island City Mixed Use District# pursuant to Section 117-51 (Queens Plaza Subdistrict Special Use Regulations), provided that no more than one such unit shall be permitted

in connection with any establishment, and provided further that each such unit shall not exceed a gross area of 1,200 square feet or contain more than one kitchen.

Home occupation

Within the Queens Plaza Subdistrict, the #home occupation# provisions of Section 12-10 shall apply, except that:

(a) up to 49 percent of the total #floor area# of a #dwelling unit# may be used for a #home occupation#;

(b) such #home occupation# may occupy more than 500 square feet of #floor area#; and

(c) businesses operated as #home occupations# may have up to three ~~non-#residential#~~ employees not residing in the #dwelling unit#.

* * *

117-512
Ground floor use and frontage regulations

On designated #streets# in the Queens Plaza Subdistrict, as shown on Map 2 in Appendix C of this Chapter, the special ground floor #use# and frontage regulations of this Section shall apply to any #building or other structure# fronting on such #streets#.

#Uses# within #stories# ~~located~~ on the ground floor or with a floor level ~~or~~ within five feet of #curb level# shall be limited to #commercial#, #manufacturing# or #community facility uses# permitted by the designated district regulations except as modified by the special #use# provisions of Sections 117-51 and 117-511. A #building's# ground floor frontage shall be allocated exclusively to such #uses#, except for lobby space or entrance space.

In no event shall the length of #street# frontage occupied by lobby space, entrance space and/or a #building# entrance recess exceed in total 50 percent of the #building's# total #street# frontage or 30 feet, whichever is less. However, the total length of #street# frontage occupied by lobby space and/or entrance space need not be less than 25 feet.

117-513
Transparency requirement

Within the Queens Plaza Subdistrict, the transparency requirements of this Section shall apply to all #developments# and to #enlargements# where the #enlarged# portion of the ground floor of the #building# is within eight feet of the #street line#. Transparency requirements shall not apply to any #building# where the ground floor is occupied by #uses# listed in Use Groups 16 or 17.

At least 50 percent of a #building's# #street wall# surface shall be glazed and transparent at the ground floor level. For the purpose of the glazing requirements, the #building's# #street wall# surface at the ground floor level shall be measured from the floor to the height of the ceiling or 14 feet above grade, whichever is less. The lowest point at any point of any transparency that is provided to satisfy the requirements of this Section shall not be higher than four feet above #curb level#. Door or window openings within such walls shall be considered as transparent. Such openings shall have a minimum width of two feet.

In addition, the remaining portion of such #building# wall that is 50 feet or more in length and contains no transparent element between #curb level# and 14 feet above #curb level# or the ceiling of the ground floor, whichever is higher, or to its full height if such wall is less than 14 feet in height, shall be covered with vines or similar planting or contain artwork or be treated so as to provide visual relief. Plantings shall be planted in soil having a depth of not less than 2 feet, 6 inches and a minimum width of 24 inches.

* * *

117-523
Lot coverage and open space ratio requirements

(a) #Lot coverage# requirements for #residential buildings#

In the Queens Plaza Subdistrict, where the designated #Residence District# is an R7 or R9 District, the provisions of Sections 23-142 (In R6, R7, R8 or R9 Districts) through 23-144, inclusive, regulating minimum required #open space ratios# and maximum #floor area ratios# shall not apply. In lieu thereof, all #residential buildings#, regardless of whether they are required to be ~~#developed# or #enlarged# pursuant to the~~ #Quality Housing buildings# ~~Program~~, shall comply with the #lot coverage# requirements set forth for the designated district in Section 23-145, or Section 23-147 for #non-profit residences for the elderly#. For purposes of this Section, #non-profit residences for the elderly# in R7 Districts without a letter suffix shall comply with the provisions for R7A Districts, as set forth in Section 23-147.

Where the designated district is an R7-3 District, the maximum #lot coverage# shall be 70 percent on an #interior# or #through lot# and 80 percent on a #corner lot#.

(b) #Lot coverage# and #open space ratio# requirements for #mixed use buildings#

#Lot coverage# and #open space ratio# requirements shall not apply to any portion of a #mixed use building# in the Queens Plaza Subdistrict.

* * *

117-525
Special yard regulations

The #yard# regulations of the underlying districts shall apply, except as specified in this Section.

(a) ~~#Residential buildings#~~

~~No #front yards# or #side yards# are required in the Queens Plaza Subdistrict. However, if any open area extending along a #side lot line# is provided at any level, such open area shall have a minimum width of eight feet.~~

~~(b)~~(a) #Mixed use buildings#

~~No #front yards# or #side yards# are required in the Queens Plaza Subdistrict.~~ For a #residential# portion of a #mixed use building#, the required #rear yard# shall be provided at ~~any level not higher than~~ the floor level of the lowest #story# containing #dwelling units# or #rooming units#, where any window of such #dwelling units# or #rooming units# faces onto such #rear yard#.

~~(c)~~(b) #Manufacturing# or #commercial buildings#

The #rear yard# provisions of the designated M1 District shall apply, except that such #rear yard# provisions shall not apply to #manufacturing# or #commercial buildings# ~~#developments# or #enlargements#~~ on #through lots#.

~~(d)~~(c) #Zoning lots# adjacent to the Sunnyside Yard

On a #zoning lot# sharing a #lot line# with the Sunnyside Yard, no #yards# are required for any ~~#development#~~ #building# within a distance of 100 feet from the shared #lot line#.

(e) For #zoning lots# occupying an entire #block#

No #rear yard# or #rear yard equivalent# shall be required for ~~any #development# on~~ a

#zoning lot# occupying an entire #block#.

* * *

117-531
Street wall location

(a) On a #wide street#, and on a #narrow street# within 50 feet of its intersection with a #wide street#, the #street wall# of a #building# shall be located on the #street line# and extend along the entire #street frontage# of the #zoning lot# up to at least the applicable minimum base height specified in the table in Section 117-532 (Setback regulations for buildings that exceed the maximum base height) or the height of the #building#, whichever is less. Recesses, not to exceed three feet in depth from the #street line#, shall be permitted on the ground floor where required to provide access to the #building#.

(b) On a #narrow street# within 100 feet of its intersection with a #wide street#, #street walls# shall extend along the entire width of such #narrow street# frontage of the #zoning lot# and shall rise without setback up to at least the applicable minimum base height specified in the table in Section 117-532, or the height of the #building#, whichever is less. Beyond 100 feet of the intersection of a #wide street#, #street walls# shall extend along at least 70 percent of such #narrow street# frontage of the #zoning lot# and shall rise without setback up to at least the applicable minimum base height specified in such table, or the height of the #building#, whichever is less. Beyond 50 feet of the intersection of a #wide street#, all #street walls# required pursuant to this paragraph, (b), shall be located within eight feet of the #street line#.

(c) On a #wide street# above the ground floor level, up to 30 percent of the #aggregate width of street walls# may be located beyond the #street line# in compliance with #outer court# regulations.

(d) On a #narrow street#, recesses are permitted at any level in the #street wall# of a base for #outer courts# or balconies. The aggregate length of such recesses shall not exceed 50 percent of the length of the entire #street wall# at any level. However, not more than 30 percent of the aggregate length of such recesses shall exceed a depth of eight feet.

(e) In the locations specified on Map 3 (Sidewalk Widening, Street Wall Location and Ground Floor Use) of Appendix C of this Chapter, a ~~#development# or #enlargement#~~ #building# shall comply with the provisions of paragraphs (a) through (d) of this Section as applicable, except that #street walls# shall be located as specified on Map 3. The #street wall# of a ~~#development# or #enlargement#~~ #building# may be set back only in the areas indicated on Map 3 as "Permitted #Street Wall# Setback Locations," provided that the additional sidewalk widening resulting from such setback is accessible to the public, ~~developed~~ in accordance with the provisions of Section 117-554, and located adjacent to a public sidewalk or mandatory sidewalk widening.

(f) For any ~~#development# or #enlargement#~~ #building# fronting on Queens Plaza South in Area A-1 or Area B as shown on Map 1 (Designated Districts within the Queens Plaza Subdistrict) of Appendix C, any #street wall# along Queens Plaza South shall be set back five feet from the #street line# except as otherwise specified on Map 3.

(g) For any ~~#development# or #enlargement#~~ #building# on a #zoning lot# located on Jackson Avenue between 42nd Road and Queens Plaza South, the #street wall# fronting on Jackson Avenue may be set back five feet from the #street line# only upon certification of the Chairperson of the City Planning Commission to the Department of Buildings that the Jackson Avenue sidewalk adjacent to the #zoning lot# will be landscaped in accordance with a plan acceptable to the Department of Transportation and the Chairperson. Such plan shall include five planting beds that shall contain a mixture of deciduous and evergreen shrubs, ground covers and flowers. Such planting beds shall be installed and maintained by the owner of the ~~#development# or #enlargement#~~ #building#. The #street wall# of any subsequent #development# or #enlargement# shall be located no closer to nor further from the #street line# than the #street wall# of an

adjacent existing #building#.

* * *

117-533
Special permit to modify use or bulk regulations

For any ~~#development#, #enlargement# or change of #use# on a~~ #zoning lot# within the Queens Plaza Subdistrict of the #Special Long Island City Mixed Use District#, the City Planning Commission may permit modification of the #use# or #bulk# regulations, except #floor area ratio# requirements, provided the Commission shall find that:

(a) such #use# or #bulk# modification will aid in achieving the general purposes and intent of the Special District;

(b) such #use# modification will encourage a lively pedestrian environment along the #street# or mandatory sidewalk widening, or is necessary for the programmatic requirements of the ~~#development#~~ development;

(c) such #bulk# modifications will enhance the distribution of #bulk# on the #zoning lot#;

(d) such #bulk# modifications will permit adequate access of light and air to surrounding #streets# and properties; and

(e) such ~~#development# or #enlargement#~~ #use# or #bulk# modification will relate harmoniously to the character of the surrounding area.

The Commission may prescribe appropriate conditions and safeguards to minimize adverse effects on the character of the surrounding area.

117-54
Off-street Parking and Loading Regulations

(a) The off-street parking provisions of Article I, Chapter 3, shall apply, except that:

(1) the provisions of paragraph (b) of Section 13-142 (Additional regulations for permitted accessory off-street parking spaces) shall also apply to Northern Boulevard, Crescent Street and 23rd Street; and

(2) the provisions of Section 13-133 (Community facility, commercial or manufacturing developments) shall be modified as follows: the maximum number of #accessory# off-street parking spaces permitted for a #development# or #enlargement# shall not exceed one space per 2,000 square feet of #floor area# or 250 spaces, whichever is less.

(b) Curb cuts ~~for #developments#~~ shall not be permitted within 40 feet of a #zoning lot line# that abuts the Sunnyside Yard.

(c) #Public parking garages# shall be permitted on #Blocks# 86/72 and 403 pursuant to Section 117-56 (Special Permit for Bulk Modifications on Blocks 86/72 and 403).

(d) For #public parking garages# permitted on #Block# 420 pursuant to Section 74-50 (OFF-STREET PARKING ESTABLISHMENTS), the floor space on one or more #stories# of the #public parking garage#, up to a height of 23 feet above #curb level#, shall be exempt from the definition of #floor area# as set forth in Section 12-10.

117-55
Mandatory Plan Elements for the Queens Plaza Subdistrict
117-551

General provisions

Within the Queens Plaza Subdistrict, the provisions of Section 117-552 (Central refuse storage area) shall apply to any #development#, ~~or~~ #enlargement#, alteration or change of #use# except where more than 50 percent of the #floor area# of such #development#, #enlargement#, alteration or change of #use# is occupied by a #use# listed in Use Groups 16 or 17.

The provisions of Sections 117-553 (Mandatory sidewalk widening and ground floor uses) and 117-554 (Mandatory sidewalk widening design requirements) apply to those locations identified on Map 3 in Appendix C of this Chapter.

* * *

117-553
Mandatory sidewalk widening and ground floor uses

The sidewalk widening and ground floor #use# provisions of this Section shall apply to all #developments# or #enlargements# with ground floor #street walls# with a ratio of #floor area ~~ratio#~~ to #lot area# of 3.0 or more:

(a) Sidewalk widening accessible to the public must be provided in the locations specified on Map 3 (Sidewalk Widening, Street Wall Location and Ground Floor Use) of Appendix C of this Chapter. Such mandatory sidewalk widening is subject to the design requirements of Section 117-554.

(b) Ground floor #commercial use# restriction

For any ~~#development# or #enlargement#~~ #building# or portion of a #building developed# or #enlarged# after July 26, 2001 fronting on the mandatory sidewalk widening required in paragraph (a) of this Section, #uses# within #stories# ~~located~~ on the ground floor or with a floor level ~~or~~ within five feet of #curb# level shall be limited to #commercial uses# listed in Use Groups 5, 6A, 6C, 7A, 7B, 8A, 8B, 9, 10, 11A, 12A and 12B, where such #uses# are permitted by the special #use# regulations of Section 117-51 (Queens Plaza Subdistrict Special Use Regulations). Any ~~#development# or #enlargement#~~ such #building# or portion thereof fronting on such mandatory sidewalk widening shall be allocated exclusively to such #uses# except for lobby space, entrance space or frontage used for subway access.

117-554
Mandatory sidewalk widening design requirements

(a) Access

All mandatory sidewalk widenings shall be accessible directly from an adjoining public sidewalk and unobstructed along at least 50 percent of the total #street# frontage. Driveways and vehicular accessways included as part of the total #street# frontage may not be counted as providing access. All mandatory sidewalk widenings shall be accessible to the public at all times.

There shall be at least one unobstructed pedestrian path of travel providing access to each of the following:

(1) at least 70 percent of the mandatory sidewalk widening's total area;

(2) any #building# lobby accessible to the mandatory sidewalk widening; and

(3) any #use# that may be present on or adjacent to and having an entrance on the mandatory sidewalk widening.

(b) Access for persons with disabilities

The mandatory sidewalk widening shall be accessible to persons with disabilities in accordance with the Americans with Disabilities Act and the American National Standards (ANSI) design standards.

(c) Elevation

All mandatory sidewalk widenings shall be located at an elevation not more than three feet above or below the #curb level# of the nearest adjoining sidewalk.

A mandatory sidewalk widening shall be at the same elevation as the adjoining public sidewalk along the #street# frontage providing access, pursuant to paragraph (a) of this Section, for a minimum depth of 10 feet measured perpendicular to the #street line#.

When the size of a mandatory sidewalk widening is 8,000 square feet or more, a maximum of 25 percent of its area may be located at an elevation more than three feet above or below the nearest adjoining sidewalk, which area, however, may not be located within a depth of 10 feet from the sidewalk measured perpendicular to the #street line#.

Where an existing subway station entry is located on the sidewalk area abutting a mandatory sidewalk widening, the mandatory sidewalk widening shall be ~~#developed#~~ provided at the same elevation as the adjoining sidewalk for a distance of at least 15 feet in all directions from the entry except as required for drainage. No obstruction shall be permitted within such portion of the mandatory sidewalk widening.

* * *

117-57
Modification of Article V, Chapter 4

~~The provisions of Section 123-80 (MODIFICATION OF ARTICLE V, CHAPTER 4) of the #Special Mixed Use District# shall apply within the Queens Plaza Subdistrict.~~
In Article V, Chapter 4 (Non-Complying Buildings), Section 54-311 (Buildings non-complying as to density regulations), shall not apply.

* * *

117-631
Floor area ratio and lot coverage modifications

(a) In the Dutch Kills Subdistrict, the #floor area# of a #building# shall not include floor space used for #accessory# off-street parking spaces provided in any #story# located not more than 33 feet above #curb level#, in any #building#, except where such floor space used for #accessory# parking is contained within a #public parking garage#.

(b) Maximum #floor area ratio# and #lot coverage# for #residential uses#

(1) M1-2/R5B designated district

The maximum #floor area ratio# for #residential use# shall be 1.65.

The maximum #lot coverage# for ~~a~~ the #residential# portion of a #building# shall be 60 percent on an #interior lot# or #through lot# and 80 percent on a #corner lot#.

(2) M1-3/R7X designated district

(i) Inclusionary Housing Program

Where the designated district is M1-3/R7X within the Dutch Kills Subdistrict, such district shall be an #Inclusionary Housing designated

area# pursuant to Section 12-10 (DEFINITIONS) for the purpose of making the Inclusionary Housing Program regulations of Section 23-90, inclusive, applicable as modified within the Special District.

(ii) Maximum #floor area ratio#

Within such #Inclusionary Housing designated area#, the maximum #floor area ratio# for any ~~#building#~~ #zoning lot# containing a #residential use# shall not exceed the base #floor area ratio# of 3.75, except that such base #floor area ratio# may be increased to the maximum #floor area ratio# of 5.0 as set forth in Section 23-952 through the provision of #affordable housing#, pursuant to the provisions relating to #Inclusionary Housing designated areas# in Section 23-90.

(c) Maximum #floor area ratio# for certain #commercial# and #manufacturing uses#

In M1-2 designated districts, the maximum #floor area ratio# shall be increased to 3.0 when paired with an R5B or R5D District and 4.0 when paired with an R6A District, provided that such additional #floor area# is limited to the following #uses#: photographic or motion picture production studios and radio or television studios listed in Use Group 10A; and #uses# listed in Use Groups 16A, 16D, 17A and 17B as set forth in Section 123-22 (Modification of Use Groups 16, 17 and 18), except for automobile, motorcycle, trailer or boat sales, motorcycle or motor scooter rental establishments, poultry or rabbit killing establishments, riding academies, stables for horses and trade schools for adults.

117-632
Street wall location

In the Dutch Kills Subdistrict, the #street wall# of any #residential# or #mixed use ~~development~~ building# ~~or #enlargement#~~ shall be located no closer to, nor further from, the #street line# than the #street wall# of an adjacent existing #building#. For all #zoning lots#, the #street wall# of a #building# need not be located further from the #street line# than 15 feet.

* * *

117-64
Special Parking Regulations

The provisions of Section 123-70 (PARKING AND LOADING) and the underlying #accessory# off-street parking and loading regulations for the designated district are modified as follows:

(a) #Commercial# and #community facility uses#

(1) The #accessory# off-street parking and loading requirements of a C8-2 District, as set forth in Article III, Chapter 6, shall apply to all #commercial# and #community facility uses#, except that this modification shall not apply to #uses# listed in Use Group 5. The #accessory# off-street parking and loading requirements applicable to the designated M1 District set forth in Article IV, Chapter 4, and Section 123-70 shall apply to Use Group 5.

(2) For Use Group 5 #uses#, the provisions of Section 44-23 (Waiver of Requirements for Spaces below Minimum Number) shall be modified as follows: the maximum number of #accessory# off-street parking spaces for which requirements are waived shall be five spaces.

(b) #Residential uses#

(1) The provisions of Section 25-241 (Reduced requirements) shall not apply in the designated M1-3/R7X District.

(2) In the applicable designated #Residence Districts#, the provisions of Section 25-26 (Waiver of Requirements for Small Number of Spaces) are modified as follows:

(i) in the designated M1-2/R6A and M1-3/R7X Districts, the provisions of Section 25-26 shall only apply to #zoning lots# existing both on October 7, 2008 and on the date of application for a building permit.

(ii) for all ~~new~~ #~~residential~~ developments# or #enlargements# in the designated M1-3/R7X District, the maximum number of #accessory# off-street parking spaces for which requirements are waived shall be five spaces.

(3) Where the designated district is a M1-2/R5B District, the provisions of paragraph (c) of Section 25-631 (Location and width of curb cuts in certain districts) shall not apply.

Appendix A
Special Long Island City Mixed Use District and Subdistricts

Special Long Island City Mixed Use District and Subdistricts

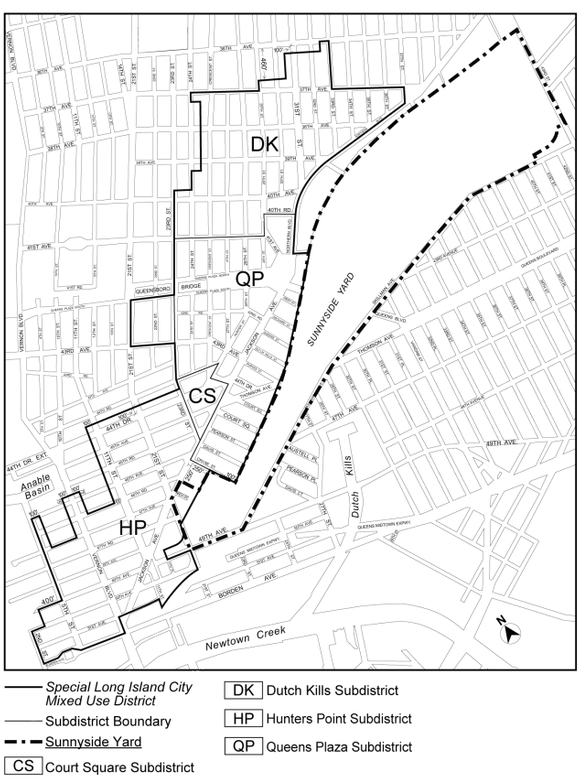

Appendix B
Court Square Subdistrict Plan Map and Description of Improvements

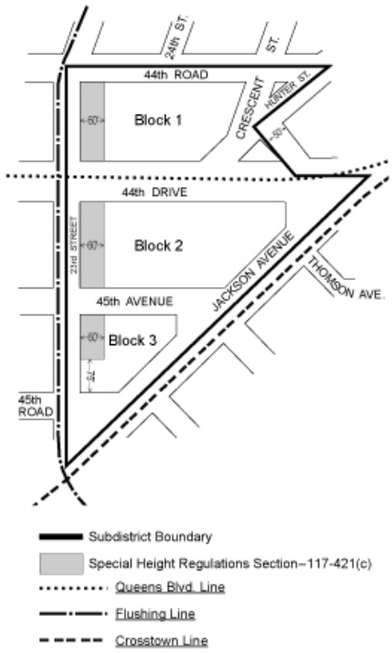

Description of Improvements

This Appendix describes the mandatory lot improvements that are designated on the District Plan Map in Appendix B for the Court Square Subdistrict. Descriptions refer to the text for requirements and standards for the following improvements.

(a) Block 1
A subway improvement, to consist of a connection between the ~~G~~ Crosstown and ~~7~~ Flushing ~~l~~Lines and maintenance of glass partitions in the control area of the ~~E/F Ely Avenue~~ Queens Boulevard Line, 23rd Street-Ely Avenue Station mezzanine and near the control area of the ~~G~~ Crosstown Line, Court Square-Long Island City Station mezzanine which are to be installed by the developer of Block 2. The developer shall notify the Chairperson of the City Planning Commission upon both application for and issuance of a first building permit for the #development# on this #block#.

(b) Block 2
A subway improvement, to consist of a connection between the ~~E/F~~ Queens Boulevard and ~~G~~ Crosstown ~~l~~Lines, preparation of preliminary plans for a ~~G/7~~ Crosstown Line, Court Square-Long Island City Station and Flushing Line, 45th Road-Courthouse Square Station connection and installation of glass partitions in the control area of the ~~E/F Ely Avenue~~ 23rd Street-Ely Avenue Station mezzanine and near the control area of the ~~G~~ Court Square-Long Island City Station mezzanine upon receipt of a written request by the Chairperson of the City Planning Commission, which shall occur only after the issuance of a first building permit for the #development# on Block 1.

(c) Block 3
(1) The first #development# or #enlargement# to meet the criteria for a subway improvement shall construct new entrances at the intersection of 44th Drive and 23rd Street for the ~~Number 7~~ Flushing ~~l~~Line, 45th Road~~/~~-Courthouse Square station in consultation with the Metropolitan Transportation Authority and the Department of City Planning.

(2) For subsequent #developments# or #enlargements#, a subway improvement to the north end of the ~~Number 7~~ Flushing ~~l~~Line, 45th Road~~/~~-Courthouse Square station shall be required. Such improvement shall be determined in consultation with the Metropolitan Transportation Authority and the Department of City Planning.

* * *

Article XI - Special Purpose Districts

Chapter 8
Special Union Square District

* * *

~~**118-01**~~
~~**Definitions**~~

~~Special Union Square District~~
~~(repeated from Section 12-10)~~

~~The "Special Union Square District" is a Special Purpose District designated by the letters "US" in which special regulations set forth in Article XI, Chapter 8 apply to all #developments# or #enlargements#. The #Special Union Square District# appears on the #zoning maps# superimposed on other districts, and its regulations supplement and modify those of the underlying districts on which it is superimposed.~~

118-02
General Provisions

In harmony with the general purpose and intent of this Resolution and the general purposes of the #Special Union Square District# and in accordance with the provisions of this Chapter, certain specified #use#, #bulk# and #sign# regulations of the underlying district are made inapplicable and are superseded by the #use#, #bulk# and #sign# regulations of the #Special Union Square District# as set forth in this Chapter. In addition, special ~~#street# wall~~ #street wall# transparency and location of entrance requirements are set forth in this Chapter. Except as modified by the express provisions of this Chapter, the underlying district regulations remain in effect.

* * *

118-10
USE REGULATIONS

118-11
Ground Floor Uses

#Uses# within #stories# that have a floor level ~~on the ground floor or~~ within five feet of #curb level# along 14th Street shall be limited to the #uses# listed below, except that entrances to above-grade or below-grade #uses# are permitted subject to the regulations set forth in Section 118-41 (Entrances on 14th Street).

These regulations shall apply to #developments#, #enlargements#, #extensions# and changes of #use#.

* * *

118-21
Floor Area Regulations

The maximum #floor area ratio# permitted on ~~property~~ a #zoning lot# or portion thereof within an area bounded by:

(a) Broadway, a line midway between East 14 Street and East 13th Street, a line 100 feet west of University Place, Union Square West and Broadway, a line midway between East 17th Street and East 18th Street, a line 100 feet east of Park Avenue South and Union Square East, East 15th Street, Union Square East, East 17th Street, Union Square West and East 14th Street is 8.0; and

(b) Broadway, a line midway between East 13th Street and East 14th Street, south prolongation of the center line of Irving Place and Irving Place, East 15th Street, Union Square East, Fourth Avenue, and East 14th Street is 10.0, except as provided in Section 118-70 (SUBWAY STATION IMPROVEMENTS WITHIN THE SPECIAL UNION SQUARE DISTRICT).

In no event~~,~~ shall the #commercial~~#~~ floor area ratio# exceed 6.0.

118-22
Residential Density Regulations

The density regulations of Section 23-30 shall not apply. Instead, for every 750 square feet of #residential floor area# permitted on a #zoning lot#, there shall be no more than one #dwelling unit#.

However, the #conversion# of non-#residential ~~buildings~~ floor area# to #residential use# shall be subject to the provisions of Article I, Chapter 5 (Residential Conversion of Existing Non-Residential Buildings).

118-30
STREET WALL, HEIGHT AND SETBACK REGULATIONS

The location and height above #curb level# of the #street wall# of any #development#, ~~or~~ #enlargement# or alteration that results in a change in the width, height or location of a #street wall# shall be as shown in the District Plan (Appendix A). However, if ~~a~~ such #development#, ~~or~~ #enlargement# or alteration is adjacent to one or more existing #buildings# fronting on the same #street line#, the #street wall# of such #development#, ~~or~~ #enlargement# or alteration shall be located neither closer to nor further from the #street line# than the front wall of the adjacent #building# which is closest to the same #street line#.

#Street wall# recesses are permitted below the level of the second #story# ceiling for subway stair entrances required under Section 118-60 (OFF STREET RELOCATION OF A SUBWAY STAIR WITHIN THE SPECIAL UNION SQUARE DISTRICT). Such recesses shall be no longer than 15 feet and no deeper than 8 feet or the width or length of the relocated subway stair, whichever is greater.

#Street wall# recesses are also permitted below the level of the second #story# ceiling for #building# or store entrances only.

A #sky exposure plane# of 2.5 to 1 shall begin at a height above #curb level# of 125 feet on all #streets# within the Special District, except that on a #narrow street# beyond 100 feet from any #street line# opposite a #public park# or from the intersection of such #narrow street# with a #wide street#, the #sky exposure plane# shall begin at a height above #curb level# of 85 feet.

No ~~#development# or #enlargement#~~ #building or other structure# shall penetrate such #sky exposure plane# except pursuant to Section 33-45 (Tower Regulations). However, Section 33-45 shall not be applicable to any portion of a #building# located within 100 feet of a #street line# opposite a #public park#.

118-31
Modification of Street Wall Requirements

(a) ~~In the #Special Union Square District#, on~~ On a #zoning lot# where there is an existing #building# to remain, ~~and when there is to be a #development#, or #enlargement#,~~ the requirements governing height and location of #street walls# shall not apply within a volume defined by the rear wall of the existing #building# (W^2), the #front lot line# (W^1), the prolongations of the side walls (L) and a height of 125 feet above #curb level#.

If, after January 10, 1985, any demolition or destruction occurs within the volume defined, the requirements governing #street wall# height shall apply.

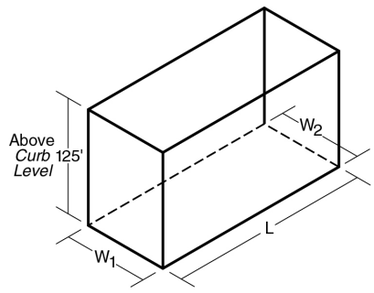

L - Sidewall and prolongation of existing *building*
W_1 - *Front lot line*
W_2 - Rear wall of existing *building*

EXISTING BUILDING VOLUME FOR
MODIFICATION OF STREET WALL REQUIREMENTS

(b) ~~Within the #Special Union Square District#, the~~ The City Planning Commission may~~, upon application,~~ authorize modifications in the required #street wall# location ~~of a #development#, or #enlargement#~~ if the Commission finds that the existing #buildings#, or existing open areas serving existing #buildings# to remain on the #zoning lot#, would be adversely affected by the location of the #street walls# of the #development#, ~~or~~ #enlargement# or alteration in a manner prescribed in paragraph (a).

118-40
ENTRANCE AND STREET WALL TRANSPARENCY REQUIREMENTS

All ~~#developments# and #enlargements#~~ #buildings developed# or portions of #buildings enlarged# after January 10, 1985 that front on 14th Street, Union Square East, Union Square West ~~and~~ or 17th Street shall be subject to the requirements set forth below.

118-41
Entrances on 14th Street

Each permitted #use# ~~that is located on the ground floor or~~ within a #story# that has a floor level within five feet of #curb level# in ~~#developments# or #enlargements#~~ #buildings# or portions of #buildings# with frontage on 14th Street shall be entered directly from 14th Street. Entrances to #uses# located above or below such #stories# ~~the ground floor in #developments# or #enlargements# fronting on 14th Street~~ are permitted, provided that such entrances in aggregate shall not exceed 30 linear feet of #street wall# frontage on 14th Street.

118-42
Entrances on Union Square East, Union Square West and 17th Street

If a #use# occupies at least 40 percent of the #floor area# of a ~~#development# or an #enlargement#~~ #building# or portion of a #building#, as applicable pursuant to Section 118-40 (ENTRANCE AND STREET WALL TRANSPARENCY REQUIREMENTS) that fronts on Union Square East, Union Square West or 17th Street between Broadway and Park Avenue South, then the principal entrance to that #use# shall be located on ~~Union Square East, Union Square West or on 17th Street between Broadway and Park Avenue South~~ such #street#. However, if more than one #use# meets these criteria, the principal entrance to only one of them is required to be so located.

118-43
Street Wall Transparency

When the #street wall# of any ~~#development# or #enlargement#~~ #building# or portion of a #building#, as applicable pursuant to Section 118-40 (ENTRANCE AND STREET WALL TRANSPARENCY REQUIREMENTS) is located on 14th Street, Union Square East, Union Square West or 17th Street, at least 50 percent of the total surface area of such #street wall# shall be transparent between #curb level# and 12 feet above #curb level# or the ceiling of the ground floor, whichever is higher. Such transparency must begin not higher than four feet above #curb level#.

* * *

Article XI - Special Purpose Districts

Chapter 9
Special Hillsides Preservation District

* * *

119-01
Definitions

Definitions specially applicable to this Chapter are set forth in this Section. The definitions of other defined terms are set forth in Section 12-10 (DEFINITIONS).

* * *

Average percent of slope

The "average percent of slope" of a #zoning lot# is the average slope of all portions of a #zoning lot# excluding #steep slopes# and shall be determined according to the following equation:

$$S = \frac{IL}{A} \times 100$$

Where:

S - average percent of slope

I - contour interval in feet

L - combined length of contour lines in feet, excluding those portions bordering or lying within areas having a slope of 25 percent or greater and meeting the definition of #steep slope#

A - gross area in square feet of the #zoning lot#, excluding those portions of the #zoning lot# having a slope of 25 percent or greater and meeting the definition of #steep slope#. For a proposed #site alteration# on a tract of land not within a #zoning lot#, the portion of such tract of land owned by the applicant shall be considered to be part of the #zoning lot#.

* * *

~~Special Hillsides Preservation District~~
~~(repeated from Section 12-10)~~

~~The "Special Hillsides Preservation District" is a Special Purpose District designated by the letters HS, in which special regulations set forth in Article XI, Chapter 9, apply to all #developments#, #enlargements# or #site alterations#.~~

~~The #Special Hillsides Preservation District# appears on the #zoning maps# superimposed on other districts, and its regulations supplement or modify those of the districts on which it is superimposed.~~

Staging area

A "staging area" is any area on a #zoning lot# or other tract of land used during the construction of a #development#, #enlargement# or #site alteration# for the purposes of stockpiling soil or construction materials; storing, cleaning or servicing construction equipment, vehicles or tools; or storing leachable construction products, gases or other materials used to clean or service

vehicles, equipment or tools.

Steep slope

A "steep slope" is a portion of a #zoning lot# or other tract of land with an incline of 25 percent or greater. However, a portion of a #zoning lot# or other tract of land with an incline of 25 percent or greater shall not be considered a #steep slope# if it occupies an area of less than 200 square feet or has a dimension of less than ten feet, measured along the horizontal plane, unless such portions in the aggregate equal ten percent or more of the area of the #zoning lot#.

* * *

Tier I site

A "Tier I site" ~~#development#, #enlargement# or #site alteration#~~ is ~~any #development#, #enlargement# or #site alteration# that occurs on~~ a #zoning lot# or other tract of land having an #average percent of slope# of less than 10 percent.

Tier II site

A "Tier II site" ~~#development#, #enlargement# or #site alteration#~~ is ~~any #development#, #enlargement# or #site alteration# that occurs on~~ a #zoning lot# or other tract of land having an #average percent of slope# equal to or greater than 10 percent.

* * *

119-02
General Provisions

In harmony with the general purpose and intent of this Resolution and the general purposes of the #Special Hillsides Preservation District#, the regulations of the districts upon which this Special District is superimposed are supplemented or modified in accordance with the provisions of this Chapter. Except as modified by the express provisions of this Chapter, the regulations of the underlying districts remain in effect.

Any #development#, #enlargement# or #site alteration# on the #buildable area# of a #zoning lot# where the #average percent of slope# is less than 10 percent shall be regulated by the provisions set forth in Section 119-10 (PROVISIONS REGULATING TIER I DEVELOPMENTS, ENLARGEMENTS AND SITE ALTERATIONS). Any #development#, #enlargement# or #site alteration# on the #buildable area# of a #zoning lot# having an #average percent of slope# equal to or greater than 10 percent shall be governed by the provisions set forth in Section 119-20 (PROVISIONS REGULATING TIER II DEVELOPMENTS, ENLARGEMENTS AND SITE ALTERATIONS).

No #development#, #enlargement# or #site alteration# is permitted within any #area of no disturbance# on a #zoning lot# or other tract of land. #Areas of no disturbance# shall remain in their natural state, except:

(a) for #steep slopes# or #steep slope buffers#, an authorization may be granted by the City Planning Commission, pursuant to Section 119-30 (SPECIAL REVIEW PROVISIONS);

(b) vegetation and #topsoil# may be removed from a #steep slope buffer# during construction on a #Tier I site ~~zoning lot#~~, provided that the #development#, #enlargement# or #site alteration# complies with the requirements of Sections 119-215 (Landscaping controls to preserve trees, shrubs and ground cover), 119-217 (Tier II controls during construction) and 119-22 (Tier II Submission Requirements); or

* * *

119-04
Future Subdivision

Within the #Special Hillsides Preservation District#, no #zoning lot# existing on June 30, 1987, may be subdivided without certification by the City Planning Commission that the proposed subdivision complies with the regulations of the #Special Hillsides Preservation District# and that all #hillsides# are preserved to the greatest extent possible under future #development# options.

A plan for such subdivision shall be filed with the Commission and shall include a survey map indicating existing topography at two-foot contour intervals and all individual trees of six-inch caliper or more.

When a #zoning lot# existing on June 30, 1987, is intended to be subdivided and is more than five acres, a site plan of the entire subdivision shall be filed with the Commission. The site plan shall include the proposed ~~#street#~~ vehicular circulation system within the area, #block# and #zoning lot# layouts and any other information required by the Commission.

In the event that any #zoning lot# proposed for subdivision contains a #development#, #enlargement# or #site alteration# that has been undertaken contrary to the provisions of this Chapter, the Commission shall not approve the subdivision until violations are removed from the #zoning lot# in accordance with the Commission's requirements under Section 119-40 (COMPLIANCE).

119-05
Applicability of Parking Location Regulations

The parking regulations ~~for #developments# in~~ applicable to #lower density growth management areas# are modified to allow required #accessory# parking spaces to be located in a #front yard#.

119-10
PROVISIONS REGULATING TIER I ~~DEVELOPMENTS, ENLARGEMENTS AND SITE ALTERATIONS~~ SITES

#Tier I ~~developments#, #enlargements# and #site alterations~~ sites# shall be regulated by the provisions set forth in this Section.

119-11
Tier I Requirements ~~for Development~~

* * *

119-112
Tier I tree planting requirements

All #~~Tier I~~ developments#, #enlargements# and #site alterations# on #Tier I sites# shall comply with the tree planting requirements set forth in this Section, whether or not existing trees are removed as a result of such #development#, #enlargement# or #site alteration#. However, the requirements set forth herein shall not apply to any #enlargement# of an existing ~~#residential~~ building#, provided that such #enlargement# does not increase the #lot coverage# of said #building#.

* * *

119-12
Tier I Submission Requirements

For all #~~Tier I~~ developments#, #enlargements# or #site alterations# on #Tier I sites#, the

following materials shall be submitted to the Department of Buildings. However, the submission requirements set forth herein shall not apply to an #enlargement# of an existing #residential building#, provided that such #enlargement# does not increase the #lot coverage# of said #building#. No building permit shall be issued until the Department of Buildings determines that the requirements of the #Special Hillsides Preservation District# have been met.

* * *

119-20
PROVISIONS REGULATING TIER II ~~DEVELOPMENTS, ENLARGEMENTS AND SITE ALTERATIONS~~ SITES

All #Tier II ~~developments#, #enlargements# and #site alterations#~~ sites# shall be regulated by the provisions set forth in this Section. However, any #~~Tier II~~ enlargement# on #Tier II sites# of an existing ~~#residential~~ building#, provided that such #enlargement# does not increase the #lot coverage# of said #building#, shall be exempted from the provisions of Section 119-211 (Lot coverage controls), Sections 119-213 (Grading controls) to 119-217 (Controls during construction), inclusive, and Sections 119-22 (Tier II Submission Requirements) and 119-23 (Administration of Tier II Requirements).

119-21
Tier II Requirements ~~for Development~~

* * *

119-212
Height and setback regulations

The height and setback regulations set forth in Sections 23-631 (Height and setback in R1, R2, R3, R4 and R5 Districts), 23-632 (Front setbacks in districts where front yards are not required), 34-25 (Modification of Height and Setback Regulations) and 35-61 (Height and Setback Regulations) shall not apply to #buildings or other structures# ~~in~~ on #Tier II ~~developments# or #enlargements#~~ sites# within the #Special Hillsides Preservation District#. In lieu thereof, the height and setback regulations set forth in this Section shall apply.

~~For any #development# or #enlargement#, no~~ No portion of a #building or other structure# shall penetrate a plane drawn parallel to the #base plane# at a height that is shown in Table III of this Section. For ~~#developments# or #enlargements#~~ #buildings# with pitched roofs, height shall be measured to the midpoint of such pitched roof. For the purposes of this Section, the #base plane#, which is a plane from which the height of a #building or other structure# is measured in R2X, R3, R4 and R5 Districts, shall also be established in accordance with the provisions of Section 12-10 (DEFINITIONS) for #buildings or other structures# in R1, R2 and R6 Districts.

TABLE III
MAXIMUM HEIGHT OF A BUILDING OR OTHER STRUCTURE

#Residence District#*	Maximum Height above #Base Plane#
R1 R2 R3 R4**	36 feet
R5**	60 feet
R6	70 feet

---

* or #Residence District# equivalent when the #zoning lot# is located within a #Commercial District#

** ~~#developments# or #enlargements#~~ #buildings# that utilize the regulations of Section 23-141, applying to a #predominantly built-up area#, shall not exceed a

maximum height of 32 feet above the #base plane#.

119-213
Grading controls

With the exception of #private roads# and driveways, no grading shall take place beyond 15 feet of the location of a #building# foundation, measured from the foundation perimeter. The following grading requirements shall apply to all #Tier II ~~developments#, #enlargements# or #site alterations~~ sites#.

* * *

119-214
Tier II requirements for driveways and private roads

The provisions set forth in this Section and Section 119-213 (Grading controls) shall apply to driveways and to #private roads# that provide access to #buildings developed# after December 11, 1999. The provisions for #private roads# set forth in Section 26-20, inclusive, shall not apply. However, the provisions for #private roads# in #lower density growth management areas# of Sections 26-31 through 26-34 shall apply.

* * *

(b) #Private roads#

* * *

(8) no building permit shall be issued by the Department of Buildings without approval by the Fire Department regarding the adequacy of vehicular access to and within the ~~#development#~~ development for fire safety. Such approval may include the modification of #private road# width as set forth in paragraph (b)(3) of this Section; and

(9) for the purposes of applying the #yard# regulations of Section 26-31, the curb of the #private road# shall be considered to be the #street line#.

The City Planning Commission may by authorization or special permit, as applicable, pursuant to Section 119-30 (SPECIAL REVIEW PROVISIONS), allow modifications to, or waivers of, the requirements of this Section. The approval of the Fire Department regarding the adequacy of vehicular access to and within the ~~#development#~~ development for fire safety shall be a condition precedent for any modification or waiver.

119-215
Landscaping controls to preserve trees, shrubs and ground cover

(a) In any #area of no disturbance#, existing vegetation and #topsoil# shall not be removed, except in accordance with a #tree protection plan# or as authorized by the City Planning Commission, pursuant to the provisions of Section 119-313 (Modification of landscaping, tree preservation and tree planting requirements).

(b) To the maximum extent possible, existing trees, shrubs and ground cover shall be retained. Vegetation may only be removed or destroyed as a result of a #development#, #enlargement# or #site alteration#, provided that:

(1) it is located in areas to be occupied by #buildings#, #private roads#, driveways, areas for required #accessory# parking or within a distance of 15 feet of a #building# foundation and, provided that it is not practical to avoid such removal by adjustments in the arrangement of such #buildings#, #private roads#, driveways or required parking areas;

* * *

119-216
Tier II tree planting requirements

All #~~Tier II~~ developments#, #enlargements# and #site alterations# on #Tier II sites# shall comply with the following tree planting requirements, whether or not existing vegetation is removed as a result of such #development#, #enlargement# or #site alteration#. However, the requirements set forth herein shall not apply to an #enlargement# of an existing #~~residential~~ building#, provided that such #enlargement# does not increase the #lot coverage# of said #building#.

On-site trees, pre-existing or newly-planted, shall be provided on the #zoning lot# at the rate of one tree for each 1,000 square feet of #lot area#, or portion thereof, or shall equal a total of 51 percent of all #tree credits# for trees originally on site, whichever is greater.

For any existing tree of at least six-inch #caliper# that is preserved, credit for one tree shall be given for the first six- inches of #caliper# and, for each additional four inches of caliper, credit for an additional tree shall be given.

Single-trunk trees newly-planted to meet this requirement shall be of at least three-inch #caliper# at the time of planting. Multiple-trunk trees and low-branching coniferous evergreens shall be at least 10 feet in height at the time of planting. On-site trees shall be of a species selected from Appendix B (Selection List for On-site Trees).

119-217
Tier II controls during construction

The following requirements must be met during construction:

(a) No construction equipment of any kind shall operate beyond 15 feet of the perimeter of a #building# foundation except those vehicles engaged in the construction of #private roads#, driveways or required #accessory# parking areas. This provision may be waived by the Commissioner of Buildings should it be determined that the particular conditions of the site make a 15-foot limit infeasible or impractical.

* * *

119-22
Tier II Submission Requirements

For all #~~Tier II~~ developments#, #enlargements# or #site alterations# on #Tier II sites#, the following materials shall be submitted to the Department of Buildings. However, the submission requirements set forth herein shall not apply to an #enlargement# of an existing #~~residential~~ building#, provided that such #enlargement# does not increase the #lot coverage# of said #building#. No building permit shall be issued until the Department of Buildings determines that the requirements of the #Special Hillsides Preservation District# have been met.

* * *

119-31
Authorizations

Upon application, the City Planning Commission may grant authorizations for modifications of specified regulations of this Chapter and for the underlying district regulations in accordance with the provisions of Sections 119-311 (Authorization of a development, enlargement or site alteration on a ~~zoning lot or portion of a zoning lot having a~~ steep slope or steep slope buffer) through 119-319 (Authorization to allow site alterations, the construction of new park-related facilities and improvements to existing park-related facilities within public parks), inclusive.

* * *

119-311
Authorization of a development, enlargement or site alteration on a ~~zoning lot or portion of a zoning lot having~~ a steep slope or steep slope buffer

The City Planning Commission may authorize #developments#, #enlargements# and #site alterations# on ~~portions of a #zoning lot# having~~ a #steep slope# or #steep slope buffer#.

In order to grant such authorizations, the Commission shall find that:

* * *

119-312
Authorization of certain uses within the Special Hillsides Preservation District

The City Planning Commission may grant authorizations for #commercial uses#, #community facility uses#, #group parking facilities# of 30 cars or more and for #enlargements# to any such #uses# and facilities.

In order to grant such authorizations, the Commission, upon review of the site plan, shall find that:

(a) the proposed #development#, #enlargement# or #site alteration# will not disturb the drainage pattern and soil conditions of the area;

(b) the proposed #development#, #enlargement# or #site alteration# has minimal impact on the existing natural topography and vegetation and blends harmoniously with it;

(c) such #development#, #enlargement# or #site alteration# is so located as not to impair the essential character of the surrounding area;

(d) the design of such #development#, #enlargement# or #site alteration# takes full advantage of all special characteristics of the site;

(e) vehicular access and egress for such #development#, #enlargement# or #site alteration# is located and arranged so as to draw a minimum of vehicular traffic to and through local #streets# in nearby ~~#residential#~~ residential areas; and

(f) where vehicular access and egress is located on an arterial, such location affords the best means for controlling the flow of traffic generated by such ~~#development#~~ development to and from such arterial.

The City Planning Commission may permit modifications to parking lot landscaping and maneuverability requirements for applications for such authorizations of #group parking facilities# for over 30 cars or for #enlargements# to #group parking facilities# if such modifications preserve vegetation and natural topography.

* * *

119-314
Modification of lot coverage controls

For any #development# or #enlargement# ~~on a #Tier II zoning lot# or within a #steep slope# or a #steep slope buffer# on a #Tier I zoning lot#~~ subject to Section 119-211 (Lot coverage, floor area and density regulations), the City Planning Commission may authorize variations in the #lot coverage# controls ~~set forth in Section 119-211 (Lot coverage, floor area and density regulations)~~.

In order to grant such authorization, the Commission shall find that:

(a) the #development# or #enlargement# is not feasible without such modification, or that the requested modification will permit a #development# or #enlargement# that satisfies the purpose of this Chapter;

* * *

119-315
Modification of height and setback regulations

For any ~~#development# or #enlargement# on a~~ #Tier II ~~zoning lot~~ site#, the City Planning Commission may authorize variations in the height and setback regulations set forth in Section 119-212 (Height and setback regulations).

In order to grant such authorizations, the Commission shall find that:

* * *

119-316
Modification of grading controls

For any #development#, #enlargement# or #site alteration# on a #Tier II ~~zoning lot~~ site #, the City Planning Commission may authorize variations in the grading controls set forth in Section 119-213.

In order to grant such authorization, the Commission shall find that:

(a) the #development#, #enlargement# or #site alteration# is not feasible without such modifications, or that the requested modifications will permit a #development#, #enlargement# or #site alteration# that satisfies the purposes of this Chapter;

* * *

119-317
Modification of requirements for private roads and driveways

For any #development#, #enlargement# or #site alteration#, the City Planning Commission may authorize variations in the requirements for #private roads# and driveways on any #Tier II ~~zoning lot~~ site# as set forth in Section 119-214 (Tier II requirements for driveways and private roads) as well as the requirements of Sections 25-621 (Location of parking spaces in certain districts) and 25-631 (Location and width of curb cuts in certain districts).

In order to grant such authorizations, the Commission shall find that:

(a) the #development# or #enlargement# is not feasible without such modification, or that the requested modification will permit a #development#, #enlargement# or #site alteration# that satisfies the purposes of this Chapter;

(b) such modification is the least modification required to achieve the purpose for which it is granted;

(c) the requested modification will not disturb the drainage pattern and soil conditions of the area;

(d) the requested modification has minimal impact on the existing natural topography and vegetation and blends harmoniously with it; and

(e) such modification will enhance the quality of the design of the ~~#development#~~ development, #enlargement# or site alteration#.

119-318

Modifications of certain bulk regulations

For any #development# or #enlargement# ~~on a #Tier I zoning lot# containing a #steep slope# or on a #Tier II zoning lot#~~ subject to Section 119-20 (PROVISIONS REGULATING TIER II SITES), the City Planning Commission may authorize variations in required #front#, #rear# or #side yards#, variations in required space between #buildings# on the same #zoning lot# and modifications in the underlying district height and setback regulations.

In order to grant such authorizations, the Commission shall find that:

(a) #development# ~~on the #zoning lot#~~ is not feasible without such modification, or that the requested modification will permit a #development#, #enlargement# or #site alteration# that better satisfies the purposes of this Chapter;

(b) such modification is the least modification required to achieve the purpose for which it is granted; and

(c) the proposed #bulk# and placement of #buildings# and the proposed arrangement of #open spaces# will not have significant adverse effects upon the light, air and privacy for existing ~~#development#~~ development in adjacent areas or the opportunities therefore in future ~~#development#~~ development.

* * *

119-321
Modification of use regulations

For any ~~#development# or #enlargement# on a~~ #Tier II ~~zoning lot~~ site# the City Planning Commission may grant special permits to allow #single-family semi-detached residences# in R1 and R2 Districts, #single-family attached residences# in R1, R2 and R3-1 Districts or #two-family attached residences# in R3-1 Districts.

As a condition for granting such special permits, the minimum required #lot area# of the underlying district shall not be reduced, and the #aggregate width of street walls# of a ~~#residential~~ building# or a number of ~~#residential~~ buildings# separated by party walls, shall not exceed 100 feet.

In order to grant such special permits, the Commission shall find that:

(a) #development# ~~on this #zoning lot#~~ is not feasible without such modifications, or that the requested modification will permit a #development#, #enlargement# or #site alteration# that better satisfies the purposes of this Chapter;

(b) the change of housing type requested constitutes the most effective method of preserving the existing topography and vegetation;

(c) the preservation of existing topography and vegetation requires the permitted ~~#development#~~ development to be concentrated, to the extent feasible, in the remaining portion of the tract;

(d) for such concentration of ~~#development#~~ development, better standards of privacy and usable #open space# can be and are achieved under the development plan by inclusion of the proposed ~~#residential~~ building# type;

(e) such modification is the least modification required to achieve the purpose for which it is granted;

(f) the proposed #street# or #private road# system for the ~~#development#~~ development is so located as to draw a minimum of vehicular traffic to and through #streets# in the adjacent area;

(g) the siting of the #building# or #buildings# will not adversely affect adjacent properties by impairing privacy or access of light and air; and

(h) the existing topography and vegetation and the proposed planting effectively screen all #attached# one-family #residences# from the #lot lines# along the ~~#development#~~ development perimeter.

The Commission may impose appropriate conditions or safeguards, such as special landscaping requirements, to minimize any adverse effects on the character of the surrounding area.

All #developments#, #enlargements# or #site alterations# that require a special permit pursuant to this Section shall also be subject to the provisions of Sections 119-33 (Special Erosion and Sedimentation Prevention Requirements for Certain Authorizations and Special Permits) and 119-34 (Special Submission Requirements for Certain Authorizations and Special Permits).

119-33
Special Erosion and Sedimentation Prevention Requirements for Certain Authorizations and Special Permits

Any #development#, #enlargement# or #site alteration# that requires an authorization or special permit and that is subject to the provisions of Section 119-20 (PROVISIONS REGULATING TIER II ~~DEVELOPMENTS, ENLARGEMENTS AND SITE ALTERATIONS~~ SITES), shall be subject to the provisions of this Section. The requirements of this Section shall supplement any other requirements that also must be met.

Prior to construction, at least one of the erosion and sedimentation control measures described in paragraphs (a) through (e) of the Section shall be selected. A plan describing how the selected erosion and sedimentation control measure will be implemented and justifying its selection on the basis of the particular conditions of the site shall be prepared by a professional engineer and submitted to the City Planning Commission.

* * *

119-34
Special Submission Requirements for Certain Authorizations and Special Permits

When a #development#, #enlargement# or #site alteration# is subject to the provisions of Section 119-20 (PROVISIONS REGULATING TIER II ~~DEVELOPMENTS, ENLARGEMENTS AND SITE ALTERATIONS~~ SITES), an application to the City Planning Commission for an authorization or special permit shall include the following submission requirements. These requirements shall be in addition to the requirements set forth in Section 119-22 (Tier II Submission Requirements).

* * *

119-35
Administration of Special Review Provisions

Where a permit other than a building permit is required for a #development#, #enlargement# or #site alteration# within the #Special Hillsides Preservation District# from any City agency, an application for such permit shall be filed simultaneously with such agency and the City Planning Commission.

No permanent certificate of occupancy shall be granted unless an inspection report, verifying that the requirements of Sections 119-20 (PROVISIONS REGULATING TIER II ~~DEVELOPMENTS, ENLARGEMENTS AND SITE ALTERATIONS~~ SITES) and 119-30 (SPECIAL REVIEW PROVISIONS) have been met, is filed with the Department of Buildings by a registered landscape architect, licensed surveyor or professional engineer.

* * *

Article XII - Special Purpose Districts
Chapter 1
Special Garment Center District

* * *

~~**121-01**~~
~~**Definitions**~~

~~Special Garment Center District~~
~~(repeated from Section 12-10)~~

~~The "Special Garment Center District" is a Special Purpose District designated by the letters "GC" in which special regulations set forth in Article XII, Chapter 1 apply. The #Special Garment Center District# appears on the #zoning maps# superimposed on other districts, and its regulations supplement or supersede those of the districts on which it is superimposed.~~

121-~~02~~ 01
General Provisions

In harmony with the general purposes of the #Special Garment Center District# the signage requirements of this Chapter shall apply to ~~all~~ any #development~~s~~#, #enlargement~~s~~#, alteration~~s~~, #extension~~s~~#, ~~and~~ #conversion~~s~~# and change of #use#. The #use# regulations of this Chapter shall apply to ~~all~~ any #conversion~~s~~#, change of #use# and #extension~~s~~ #. Special #bulk# regulations apply within the Preservation Area P-2. Except as modified by the express provisions of this Chapter, the regulations of the underlying districts remain in effect.

~~(1/19/05)~~

121-~~03~~ 02
District Plan (Appendix A)

* * *

121-11
Special Use Regulations

(a) In Preservation Area P-1, permitted uses are listed in Use Groups A and B, as set forth in Sections 121-111 and 121-112. In addition, ~~conversion~~ a change of #use# to a Use Group 6B #use# is permitted subject to the #floor area# preservation requirements of Section 121-113 (Floor area preservation).

(b) In Preservation Area P-2, for #buildings# with less than 70,000 square feet of #floor area# on January 19, 2005, the underlying #use# regulations shall apply, except that the provisions of Sections 15-20 through 15-215, inclusive, shall not apply. In lieu thereof, the provisions of Section 15-10 through 15-13, inclusive, shall apply to the #conversion# to #dwelling units# of #non-~~#residential~~ residential buildings#.

(c) In Preservation Area P-2, for #buildings# with 70,000 square feet or more of #floor area# existing on January 19, 2005, permitted #uses# are listed in Use Groups A and B as set forth in Sections 121-111 and 121-112. In addition, ~~conversion~~ a change to any #use# permitted by the underlying #use# regulations is permitted subject to the #floor area# preservation requirements of Section 121-113. For portions of such #buildings# converted# to #dwelling units#, the provisions of Sections 15-20 through 15-215, inclusive, shall not apply. In lieu thereof, the provisions of Section 15-10 through15-13, inclusive, shall apply to such #conversions#. Such #floor area# preservation requirements may be waived by authorization of the City Planning Commission pursuant to Section 121-13.

(d) In Preservation Area P-2, any #development# or #enlargement# that includes Use Group

6B offices ~~constructed~~ #developed# or #enlarged# after January 19, 2005, shall be permitted only pursuant to Section 93-13 (Special Office Use Regulations).

121-111
Use Group A

~~Conversion~~ Changes of #use# to Use Group A #uses# are exempt from the #floor area# preservation requirements of Section 121-113. In Preservation Area P-1, in the case of ~~conversion~~ a change of #use# of #floor area# to a Use Group 6B #use#, Use Group A #uses# may not be used to satisfy the preservation requirement. In Preservation Area P-2, in the case of ~~conversion~~ a change of #use# of #floor area# to any #use# permitted by the underlying #use# regulations, Use Group A #uses# may not be used to satisfy the preservation requirement.

* * *

121-112
Use Group B

~~Conversion~~ Changes of #use# to Use Group B #uses # are exempt from the #floor area# preservation requirements of Section 121-113. In Preservation Area P-1, in the case of ~~conversion~~ a change of #use# of #floor area# to a Use Group 6B #use#, only Use Group B #uses# may be used to satisfy the #floor area# preservation requirements. In Preservation Area P-2, in the case of ~~conversion~~ a change of #use# of #floor area# to any #use# permitted by the underlying #use# regulations, only Use Group B #uses#, and #uses# in Use Group 6A and 6C may be used to satisfy the preservation requirement.

* * *

121-113
Floor area preservation

In Preservation Area P-1, the ~~conversion~~ change of #use# of #floor area# to Use Group 6B #use# after March 26, 1987, and, in Preservation Area P-2, for #buildings# with 70,000 square feet or more of #floor area# existing on January 19, 2005, the ~~conversion~~ change of #use# of #floor area# to any #use# permitted by the underlying #use# regulations is permitted only by certification of the Chairperson of the City Planning Commission that #floor area# has been preserved subject to the provisions of Section 121-115 (Certification and other requirements of preservation conversion) for #uses# specified in Section 121-112 (Use Group B).

The amount of #floor area# to be preserved shall be equal to the amount of #floor area# ~~converted~~ changed to a Use Group 6B #use# or any #use# permitted by the underlying #use# regulations, as applicable. Such #floor area# may be preserved in the same #building# or in any other comparable #building# in Preservation Areas P-1 or P-2, subject to the provisions of Section 121-114 (Comparability).

#Floor area# may not be preserved on portions of floors. If the #floor area# to be preserved includes a fraction of a floor, the next highest number of full floors must be preserved for a permitted #use# in Use Group B. At the time of ~~conversion~~ such change of #use#, #floor area# to be preserved must either be vacant or occupied by a #use# in Use Group B.

121-114
Comparability

Where the #floor area# to be preserved is not located within the same #building# ~~to be converted~~ where the #use# will be changed, such #floor area# must be comparable to #floor area# in the #building# ~~to be converted~~ where the #use# will be changed . Comparability, shown by an affidavit from a professional engineer or a registered architect, licensed under the laws of the State of New York, shall exist where the #floor area# to be preserved meets the following criteria:

(a) Elevators: Load and number

(1) Load

Each elevator shall have a minimum load of 2,000 pounds. The total load of all elevators servicing the #floor area# to be preserved shall be in accordance with the following ratio:

Total load	Is greater than or equal to 90% of	Total load
Gross #floor area# of #building# to be preserved		Gross #floor area# of #building# ~~to~~ that will be ~~converted~~ occupied by the change of #use#

(2) Number

There shall be a minimum of two elevators. The number of elevators servicing the #floor area# to be preserved shall be in accordance with the following ratio:

Number of elevators	Is greater than or equal to 90% of	Number of elevators
Gross #floor area# of #building# to be preserved		Gross #floor area# of #building# ~~to~~ that will be ~~converted~~ occupied by the change of #use#

Notwithstanding the above, where there is only one elevator servicing the #floor area# to be ~~converted~~ occupied by the change of #use# , there may be one elevator servicing the #floor area# to be preserved if the following exist:

(i) the #floor area# to be serviced by the elevator in the #building# to be preserved does not exceed the #floor area# serviced by the elevator in the #building# to be ~~converted~~ occupied by a change of #use# by more than 10 percent, and

(ii) the ratio of the volume of the elevator servicing the #floor area# to be preserved to the #floor area# to be preserved is at least 90 percent of the ratio of the volume of the elevator servicing the #floor area# to be ~~converted~~ occupied by the change of #use# to the #floor area# to be ~~converted~~ occupied by the change of #use#. If the number of elevators required pursuant to the above ratio includes a fraction of an elevator, this fraction shall be rounded to the nearest whole number.

(b) Floor load

The floors shall have a minimum live load capacity of 100 pounds per square foot (100 psf).

(c) Size of floors

The #floor area# shall be located on floors of not less than 3,000 square feet or 50 percent of the size of the floors in the #building# to be ~~converted~~ occupied by the change of #use#, whichever is greater. #Floor area# may not be preserved on portions of floors.

(d) Loading facilities

The loading facilities shall be at least equal in number to those in the #building#

to be ~~converted~~ occupied by the change of #use#. In addition, if such #building# has an off-street loading dock, the #building# containing the #floor area# to be preserved must have such off-street loading facilities.

(e) Column spacing

There shall be a minimum distance between columns of 16 feet, measured on center. In addition, the average distance between columns shall not be less than 90 percent of the average distance between columns in the #building# to be ~~converted~~ occupied by the change of #use#.

(f) Height of #stories#

The #stories# shall have an average minimum height of ten feet.

121-115
Certification and other requirements of preservation and conversion

(a) Prior to the issuance of an alteration permit for the ~~conversion~~ change of #use# of #floor area# to Use Group 6B #use# in Preservation Area P-1, or the ~~conversion~~ change of #use# of #floor area# to any #use# permitted by the underlying #use# regulations in Preservation Area P-2, the Chairperson of the City Planning Commission shall certify compliance with the requirements of Section 121-113 (Floor area preservation) upon proof of a legal commitment to preserve and maintain the required #floor area# for a permitted #use# in Use Group B. Such legal commitment shall be executed by all parties having any interest in the #floor area# to be preserved as shown by a certificate issued by a title insurance company licensed to do business in the State of New York showing all such parties in interest.

* * *

121-13
Authorization for Waiver of Floor Area Preservation Requirements

In Preservation Area P-2, for #buildings# with 70,000 square feet or more of #floor area# existing on January 19, 2005, the City Planning Commission may authorize the #conversion# or change of #use# of #floor area# to any #use# permitted by the underlying #use# regulations without complying with the #floor area# preservation requirements set forth in Section 121-113, provided the Commission finds that:

(a) the #floor area# to be ~~converted~~ occupied by the change of #use# has not been occupied by any #manufacturing#, wholesale or showroom #use# for a period of at least three years prior to the date that a complete application has been filed with the Department of City Planning;

(b) the #conversion# or change of #use# will not harm the commercial and manufacturing sectors of the City's economy;

(c) the #conversion# or change of #use# will not harm the commercial and manufacturing character of the surrounding area;

(d) the process of #conversion# or changing #uses# will not unduly burden #commercial# and #manufacturing uses# in the #building#; and

(e) the neighborhood in which the #conversion# or the change of #use# is taking place will not be excessively burdened by increased #residential# activity.

* * *

121-31

Maximum Permitted Floor Area

The basic maximum #floor area ratio# of a #zoning lot# containing #non-residential ~~non-#residential~~ buildings# shall be 10.0 and may be increased to a maximum #floor area ratio# of 12.0 only pursuant to Section 93-31 (District Improvement Fund Bonus). Such #zoning lot# may also contain #residences# within #buildings# existing on January 19, 2005, provided that such #buildings# are not #enlarged# after such date. For ~~#buildings#~~ #zoning lots# containing #residences# within a #building# that is #developed# or #enlarged# on or after January 19, 2005, the basic maximum #floor area ratio# shall be 6.5. The #floor area ratio# of any ~~#building#~~ such #zoning lot# ~~containing #residences#~~ may be increased from 6.5, pursuant to Section 93-31, and pursuant to Section 23-90 (INCLUSIONARY HOUSING), as modified by Section 93-23, provided that for every five square feet of #floor area# increase pursuant to Section 93-31, there is a #floor area# increase of six square feet pursuant to Section 23-90, as modified by Section 93-23, inclusive. The maximum # residential floor area ratio# shall be 12.0.

For the #conversion# to #dwelling units# of #non-residential ~~non-#residential~~ buildings#, or portions thereof, where the total #floor area# on the #zoning lot# to be #converted# to #residential use# exceeds a #floor area ratio# of 12.0, such excess #floor area# shall be permitted only pursuant to Section 93-31.

121-32
Height of Street Walls and Maximum Building Height

(a) Height of #street walls#

The #street wall# of any ~~#development# or #enlargement#~~ #building# shall be located on the #street line# and extend along the entire #street# frontage of the #zoning lot# not occupied by existing #buildings# to remain. Such #street wall# shall rise without setback to a minimum base height of 80 feet and a maximum base height of 90 feet. However, if the height of an adjacent #street wall# fronting on the same #street line# is higher than 90 feet before setback, the #street wall# of the new or #enlarged building# may rise without setback to the height of such adjacent #street wall#, up to a maximum height of 120 feet.

For #zoning lots# or portions thereof, with #street# frontage of 25 feet or less and existing on June 29, 2010, a minimum base height lower than 80 feet shall be permitted along such #street# frontage in accordance with the following provisions:

(1) where the height of an adjacent #street wall# fronting on the same #street line# is at least 60 feet and less than 80 feet, the #street wall# of the new or #enlarged building# may rise without setback to the height of such adjacent #street wall#; or

(2) where the height of an adjacent #street wall# fronting on the same #street line# is less than 60 feet, the #street wall# of the new or #enlarged building# may rise without setback to a minimum #street wall# height of 60 feet.

The #street wall# of any ~~#development# or #enlargement#~~ #building# may rise to a height less than the minimum base height required pursuant to this paragraph, (a)~~, provided that no #building# on the #zoning lot# exceeds such height~~ except where such #building# is located on a #zoning lot# with multiple #buildings#, one or more of which is #developed, enlarged# or altered after (date of amendment) to a height exceeding the minimum base height required pursuant to this paragraph, (a).

(b) Maximum #building# height

Above a height of 90 feet or the height of the adjacent #street wall# if higher than 90 feet, no portion of ~~the #development# or #enlargement#~~ a #building or other structure# shall penetrate a #sky exposure plane# that begins at a height of 90 feet above the #street line#, or the height of the adjacent #street wall# if higher than 90 feet, and rises over the #zoning lot# at a slope of four feet of vertical distance for each foot of horizontal distance to a maximum height limit of 250 feet, except as provided below:

(1) any portion of the #building or other structure developed# or #enlarged# pursuant to the tower regulations of Sections 33-45 or 35-63, as applicable, may penetrate the #sky exposure plane#, provided no portion of such #building or other structure# exceeds the height limit of 250 feet; and

(2) permitted obstructions, as listed in paragraph (a) of Section 93-41, may penetrate the #sky exposure plane# and the height limit of 250 feet. In addition, a dormer, as listed in paragraph (c) of Section 23-62, may penetrate the #sky exposure plane#.

On a #zoning lot# with frontage of at least 200 feet along at least one #street#, up to 20 percent of the #aggregate width of the street wall# facing such #street#, for a maximum width of 50 feet, may be recessed to a maximum depth of 15 feet from the #street line#, provided the recessed area is located a minimum of 20 feet from an adjacent #building# and that a minimum of 60 percent of such area is planted with any combination of grass, ground cover, shrubs, trees or other living plant material <u>in the ground or in planters permanently affixed to the ground</u>.

* * *

Article XII - Special Purpose Districts
Chapter 2
Special Grand Concourse Preservation District

* * *

122-01
Definitions

~~Special Grand Concourse Preservation District~~
~~(repeated from Section 12-10)~~

~~The "Special Grand Concourse Preservation District" is a Special Purpose District designated by the letter "C" in which regulations set forth in Article XII, Chapter 2 apply. The #Special Grand Concourse Preservation District# appears on the #zoning maps# superimposed on other districts and, where indicated, its regulations supersede those of the underlying districts on which it is superimposed.~~

Display window

A "display window" is a window or opening in the exterior wall of any portion of a #building# which is glazed with tinted or transparent material and which is used to display merchandise, services, or business.

Sign band

A "sign band" is a horizontal band which extends the full length of the #street wall# of a #building#, and is located between 8 feet, 0 inches and 14 feet, 0 inches above #curb level#. ~~All permitted #accessory signs# shall be located within the #sign band#.~~

* * *

122-10
SPECIAL USE REGULATIONS

In order to preserve the residential character of the Special District, the applicable #use# regulations of the underlying districts are modified as follows:

(a) Within the Limited Commercial Areas, #commercial uses# listed in Section 32-15 (Use Group 6) are permitted, provided they are located only on the ground floor of an existing or new #building# containing #residential# ~~and/or~~ or #community facility uses#. All existing or new #commercial uses# shall be directly accessible only from the #street#. Any existing #commercial use# which fails to provide direct access from a #street# shall be terminated one year after September 28, 1989.

(b) On a cross-street within the Commercial Extension Areas, #commercial uses# listed in Section 32-15 (Use Group 6) are permitted to occupy the ground floor of an existing or new #building# containing #residential# ~~and/or~~ or #community facility uses#. Such ground floor #commercial uses# may be permitted ~~#~~ to #extend# up to the Grand Concourse on the #basement# level of a #building# provided that such #commercial uses# are accessible only from a cross-street which intersects the Grand Concourse. No direct or indirect access to such #commercial uses# is permitted from the Grand Concourse.

(c) Any #commercial use# which lawfully existed on or before July 1, 1981 on any Commercial Infill Site listed in Table A shall be considered conforming and may be changed to a Use Group 6 #use# or to a #use# which previously occupied the space lawfully on or before July 1, 1981, except that expansion or re-occupancy of #floor area# to a retail #use# in Use Group 6A or 6C is restricted to the ground floor of the #building#.

However, if a #building# on a Commercial Infill Site contains an entrance from the Grand

Concourse as well as from the cross-street running underneath the Concourse, such entrance floors at both #street# levels may be occupied by retail #uses# listed in Use Group 6 if they were in existence prior to July 1, 1981 as a lawful #use#. In those cases, the #use# of the remaining #stories# of such #building# shall be limited to business, professional or governmental offices or to ambulatory diagnostic or treatment health care facilities as set forth in Use Group 4A ~~and/or~~ or Use Group 6B, regardless of the locational restrictions in Use Group 4.

TABLE A
COMMERCIAL INFILL SITES

Tax Block Number	Tax Lot Number	Address	Type of Building
2468	1	851 Grand Concourse	Courthouse
2821	11	1526 Grand Concourse	1 story commercial
2821	13	1540 Grand Concourse	Vacant lot
2822	27	1775 Grand Concourse	Telephone Co. building
2795	14~~20~~	1780 Grand Concourse	Office building/garage
2805	23	1845 Grand Concourse	1 story commercial
2801	7	1850 Grand Concourse	2 story commercial
2808	44	1963 Grand Concourse	Funeral Home
2808	82	2029-2043 Grand Con.	1 story commercial
3161	25	2101 Grand Concourse	1 story commercial
3157	32	2202-2206 Grand Con.	1 story commercial
3163	40	2231-2233 Grand Con.	1 story commercial
3158	16	2262-2268 Grand Con.	1 story commercial
3163	38	2235-2239 Grand Con.	1 story commercial
3307	68	3000 Grand Concourse	Funeral Home
3315	51	2833-2843 Grand Con	1 story commercial
2808	82	148 E. Burnside Ave.	1 story commercial

(d) For the purposes of this Chapter, any non-#residential uses# permitted pursuant to paragraphs (a) through (c) of this Section shall be located only on a #story# below the lowest #story# occupied by a #residential use# except that this limitation shall not preclude the location of any such non-#residential use# below the level of the first #story# ceiling.

122-20
SPECIAL SIGN REGULATIONS

In order to enhance the visual quality of the Special District, the applicable #sign# regulations of the underlying districts are modified as follows:

(a) Within the Limited Commercial Areas, only one #sign#, other than an #advertising sign#, with a surface area not exceeding 12 square feet shall be permitted per #commercial use#.

Such #signs# shall be located in a #sign band#, on the flap of a canopy, or as allowed under paragraph (d) of this Section. The height of such #signs# shall be not more than 24 inches and the letter sizes shall be restricted to a height of 12 inches. Except as provided in paragraph (d), all such #signs# may not project from the vertical surface of a #building# more than 18 inches.

(b) Within the Commercial Extension Areas, no #signs# and no #display windows# shall be permitted on a #building or other structure# within 50 feet of the Grand Concourse. #Commercial uses# which are located on a cross-street beyond a distance of 50 feet from the Grand Concourse #street line#, shall comply with the #sign# regulations applicable to the underlying #Commercial District#.

(c) On Commercial Infill Sites, the maximum surface area to be occupied by a #sign#, other than an #advertising sign#, shall be three square feet for every five feet of store frontage or 12 square feet, whichever is greater. Such #signs# shall be located in a #sign band# ~~and/or~~ or on the flap of a canopy, or as allowed under paragraph (d) of this Section. On portions of Commercial Infill Sites more than 50 feet from the Grand Concourse, the signage regulations of a C1 District shall apply.

(d) Except in C1 Districts, no #sign# may be located so as to obscure any decorative lintel, cornice or other architectural detail. In the event that compliance with this requirement does not provide adequate surface area for the allowable #sign# as defined in paragraph (a) of this Section, a projecting #sign# may be permitted by the Commissioner of Buildings provided that no such #sign# shall project from the vertical surface of a #building# more than 18 inches.

(e) Except in C1 Districts, no banners, pennants, #flashing# or #illuminated signs# shall be permitted anywhere within the Special District.

(f) Within the Limited Commercial Areas, Commercial Infill Sites, and Commercial Extension Areas within 50 feet of the Grand Concourse, window graphics shall occupy not more than 20 percent of a window. Display lettering more than three inches high shall be considered as a #sign#.

(g) All lawfully existing #non-conforming signs# located within the Special District shall be terminated one year after September 28, 1989.

122-30
SPECIAL BULK REGULATIONS

In order to preserve the scale and character of the Grand Concourse, the #bulk# regulations of the underlying R8 District and the C1 or C2 Districts mapped within such R8 District shall be inapplicable to any #residential# ~~and/or~~ or #community facility~~#~~ developments# or #enlargements# located within the Special District.

In lieu thereof, such #developments# or #enlargements# shall comply with the regulations of an R8X District, including Article II, Chapter 8.

If a ~~new~~ #commercial ~~building~~ development# is constructed on a vacant Commercial Infill Site previously occupied by a #commercial building# on or before July 1, 1981 or an existing #commercial building# located on a Commercial Infill Site is replaced by a ~~new~~ #commercial ~~building~~ development#, the height, #lot coverage# and #floor area# of the ~~new~~ #commercial ~~building~~ development# shall not exceed the height, #lot coverage# and #floor area# of the #building# it replaced. However, if a #residential# or #community facility building# is constructed on any Commercial Infill Site or when such sites become a part of the adjoining #zoning lot#, it shall be subject to the R8X District regulations. No #mixed buildings# or #enlargement# of existing #buildings# shall be permitted on any Commercial Infill Sites.

* * *

122-50

SPECIAL PROVISIONS FOR PLANTING STRIPS

For #developments# or #enlargements#, there shall be a strip of continuous planting at grade of not less than three feet in width along the entire front wall of ~~a new #building#~~ such #development# or such #building# that is #enlarged#. In the event a #building# is constructed within three feet of the #street line#, the owner of the #building# shall apply to the Bureau of Highway Operations for permission to locate a portion of such planting strips on a public sidewalk within the #street line#. A copy of such application shall be submitted with the new building application when filed at the Department of Buildings. Such sidewalk planting requirement may be waived by the Department of Buildings only upon receipt of written disapproval by the Department of Transportation.

122-60
SPECIAL ACCESSORY OFF-STREET PARKING REGULATIONS

In the Residential Preservation Area, the parking requirements of the underlying districts shall be inapplicable. In lieu thereof, the #accessory# off-street parking regulations of R8X Districts ~~and of C1 Districts mapped within R8 Districts~~ shall apply to ~~all~~ #developments# or #enlargements#.

If a #commercial development# is constructed on a vacant Commercial Infill Site previously occupied by a #commercial building# on or before July 1, 1981, or an existing #commercial building# located on a Commercial Infill Site is replaced by a #commercial development#, the number of #accessory# off-street parking spaces provided by the #commercial development# shall be equal to or greater than the number of #accessory# off-street parking spaces provided by the #building# it replaced.

* * *

~~**122-80**~~
~~**SPECIAL PROVISIONS FOR ALTERATIONS**~~

~~In the case of any alteration other than an #incidental alteration#, only the R8X District density regulations of the Quality Housing Program set forth in Section 28-21 (Size of Dwelling Units) shall apply to such alterations.~~

* * *

Article XII - Special Purpose Districts
Chapter 3
Special Mixed Use District

* * *

123-10
GENERAL PROVISIONS

The provisions of this Chapter shall apply ~~to all #developments#, #enlargements#, #extensions#, alterations and changes of #use#~~ within the #Special Mixed Use District#. The regulations of all other Chapters of this Resolution are applicable, except as superseded, supplemented or modified by the provisions of this Chapter. In the event of a conflict between the provisions of this Chapter and other regulations of this Resolution, the provisions of this Chapter shall control.

In #Special Mixed Use Districts#, an M1 District is paired with a #Residence District#, as indicated on the #zoning maps#.

The designated #Residence Districts# in #Special Mixed Use Districts# shall not include either an R1 or an R2 District.

123-11
Definitions

Definitions specifically applicable to this Chapter are set forth in this Section. The definitions of other defined terms are set forth in Section 12-10 (DEFINITIONS).

Accessory use

In addition to those "accessory uses" listed in Section 12-10 (DEFINITIONS), for the purposes of this Chapter an #accessory use# shall also include a #dwelling unit# in connection with any #commercial#, #manufacturing# or #community facility# establishment permitted in #Special Mixed Use Districts# pursuant to Section 123-20 (SPECIAL USE REGULATIONS), provided that no more than one such unit shall be permitted in connection with any establishment, and provided further that each such unit shall not exceed a gross area of 1,200 square feet or contain more than one kitchen.

Home occupation

For the purposes of this Chapter, the #home occupation# provisions of Section 12-10 shall apply, except that:

(a) up to 49 percent of the total #floor area# of a #dwelling unit# may be used for a #home occupation#;

(b) such #home occupation# may occupy more than 500 square feet of #floor area#; and

(c) businesses operated as #home occupations# may have up to three ~~non-#residential#~~ employees not residing in the #dwelling unit#.

Mixed use building

For the purposes of this Chapter, a "mixed use building" is a #building# in the #Special Mixed Use District# used partly for #manufacturing#, #commercial# or #community facility use# and partly for #residential use#.

* * *

123-31
Provisions Regulating Location of Uses in Mixed Use Buildings

In #Special Mixed Use Districts#, in any #building# or portion of a #building# occupied by #residential uses#, non-#residential uses# may be located only on a #story# below the lowest #story# occupied by ~~such #residential uses#~~ #dwelling units# or #rooming units#, except that this limitation shall not preclude the:

~~(a) location of #residential# lobby space below or on the same #story# as non-#residential uses#;~~

~~(b)~~(a) extension of a permitted #business sign#, #accessory# to such non-#residential use#, to a maximum height of two feet above the level of a finished floor of the second #story#, but in no event higher than six inches below the lowest window sill on the second #story#;

~~(c)~~(b) location of non-#residential uses# on the same #story#, or on a #story# higher than that occupied by ~~#residential uses#~~ #dwelling units# or #rooming units#, in ~~non-#residential~~ #buildings# ~~or portions thereof,~~ in existence on or prior to December 10, 1997, that are partially #converted# to #residential use# pursuant to paragraph (a) of Section 123-67 (Residential Conversion), or were previously so #converted# pursuant to Article I, Chapter 5 (Residential Conversion ~~of~~ within Existing ~~Non-Residential~~ Buildings); or

~~(d)~~(c) location of non-#residential uses# on the same #story#, or on a #story# higher than that occupied by ~~#residential uses#~~#dwelling units# or #rooming units#, provided that the non-#residential uses#:

(1) are located in a portion of the #mixed use building# that has separate direct access to the #street# with no access to the #residential# portion of the #building# at any #story#; and

(2) are not located directly over any portion of a #building# containing #dwelling units# or #rooming units#.

* * *

123-62
Maximum Floor Area Ratio for Community Facilities

The maximum #floor area ratio# permitted for ~~the~~ a #community facility use# ~~portion of a #building#~~ pursuant to Article IV, Chapter 3, shall not apply. In lieu thereof, the maximum #floor area ratio# permitted for ~~the~~ a #community facility use# ~~portion of a #building#~~ shall be the maximum #floor area ratio# allowed for ~~the~~ a #community facility use# ~~portion of a #building#~~ pursuant to the designated #Residence District# regulations set forth in Section 24-11 (Maximum Floor Area Ratio and Percentage of Lot Coverage). #Lot coverage# requirements shall not apply.

When the designated district is an R7-3 District, the maximum #floor area ratio# for ~~the~~ a #community facility use# ~~portion of a #building#~~ shall be 5.0.

When the designated district is an R9-1 District, the maximum #floor area ratio# for ~~the~~ a #community facility use# ~~portion of a #building#~~ shall be 9.0.

The provisions of this Section shall not apply on #waterfront blocks#, as defined in Section 62-11. In lieu thereof, the applicable maximum #floor area ratio# set forth for #community facility uses# in Section 62-30 (SPECIAL BULK REGULATIONS) through 62-32 (Maximum Floor Area Ratio and Lot Coverage on Waterfront Blocks), inclusive, shall apply.

123-63
Maximum Floor Area Ratio and Lot Coverage Requirements for Zoning Lots Containing Only Residential Buildings in R6, R7, R8 and R9 Districts

Where the designated #Residence District# is an R6, R7, R8 or R9 District, the minimum

required #open space ratio# and maximum #floor area ratio# provisions of Sections 23-142, 23-143 and paragraph (a) of Section 23-147 shall not apply. In lieu thereof, all #residential buildings#, regardless of whether they are required to be #developed# or #enlarged# pursuant to the Quality Housing Program, shall comply with the maximum #floor area ratio# and #lot coverage# requirements set forth for the designated district in Section 23-145, or paragraph (b) of Section 23-147 for #non-profit residences for the elderly#. For purposes of this Section, #non-profit residences for the elderly# in R6 and R7 Districts without a letter suffix, shall comply with the provisions for R6A or R7A Districts, respectively, as set forth in paragraph (b) of Section 23-147.

Where the designated district is an R7-3 District, the maximum #floor area ratio# shall be 5.0 and the maximum #lot coverage# shall be 70 percent on an #interior# or #through lot# and 80 percent on a #corner lot#.

Where the designated district is an R9-1 District, the maximum #floor area ratio# shall be 9.0, and the maximum #lot coverage# shall be 70 percent on an #interior# or #through lot# and 80 percent on a #corner lot#.

The provisions of this Section shall not apply on #waterfront blocks#, as defined in Section 62-11. In lieu thereof, the applicable maximum #floor area ratio# and #lot coverage# requirements set forth for #residential uses# in Section 62-30 (SPECIAL BULK REGULATIONS) through 62-32 (Maximum Floor Area Ratio and Lot Coverage on Waterfront Blocks), inclusive, shall apply.

However, in #Inclusionary Housing designated areas#, as listed in the table in this Section, the maximum permitted #floor area ratio# shall be as set forth in Section 23-952. The locations of such districts are specified in APPENDIX F of this Resolution.

Special Mixed Use District	Designated Residence District
MX 2-Community District 2, Brooklyn	R7A R8A
MX 8-Community District 1, Brooklyn	R6 R6A R6B R7A
MX 11-Community District 6, Brooklyn	R7-2
MX 14–Community District 6, the Bronx	R7A R7X

123-64
Maximum Floor Area Ratio and Lot Coverage Requirements for Zoning Lots Containing Mixed Use Buildings

For #zoning lots# containing #mixed use buildings#, the following provisions shall apply.

(a) Maximum #floor area ratio#

(1) #Manufacturing# or #commercial ~~portions~~ uses#

The maximum #floor area ratio# permitted for ~~the~~ #manufacturing# or #commercial uses# ~~portion of a #mixed use building# in #Special Mixed Use Districts#~~ shall be the applicable maximum #floor area ratio# permitted for #manufacturing# or #commercial ~~buildings~~ uses# under the provisions of Section 43-12, in accordance with the designated M1 District.

(2) #Community facility ~~portion~~ uses#

The maximum #floor area ratio# permitted for ~~the~~ #community facility uses# ~~portion of a #mixed use building# in #Special Mixed Use Districts#~~ shall be the applicable maximum #floor area ratio# permitted for #community facility uses ~~buildings~~# in #Residence Districts# under the provisions of Section 24-11, in accordance with the designated #Residence District#.

(3) #Residential uses# ~~portion~~

Where the #Residence District# designation is an R3, R4 or R5 District, the maximum #floor area ratio# permitted for ~~the~~ #residential uses# ~~portion of a #mixed use building# in #Special Mixed Use Districts#~~ shall be the applicable maximum #floor area ratio# permitted for #residential ~~buildings~~ uses# under the provisions of Sections 23-14 and 23-141, in accordance with the designated #Residence District#.

Where the #Residence District# designation is an R6, R7, R8, R9 or R10 District, the maximum #floor area ratio# permitted for ~~the~~ #residential uses# ~~portion of a #mixed use building# in #Special Mixed Use Districts#~~ shall be the applicable maximum #floor area ratio# permitted for #residential ~~buildings~~ uses# under the provisions of Section 123-63, in accordance with the designated #Residence District#.

(4) Maximum #floor area# in #mixed use buildings#

The maximum total #floor area# in a #mixed use building# ~~in #Special Mixed Use Districts#~~ shall be the maximum #floor area# permitted for either the #commercial, manufacturing, community facility# or #residential use# ~~portion of such #building#~~, as set forth in this Section, whichever permits the greatest amount of #floor area#.

However, in #Inclusionary Housing designated areas#, except within Waterfront Access Plan BK-1, the maximum #floor area ratio# permitted for #zoning lots# containing #residential# and #commercial#, #community facility# or #manufacturing uses# shall be the base #floor area ratio# set forth in Section 23-952 for the applicable district. Such base #floor area ratio# may be increased to the maximum #floor area ratio# set forth in such Section only through the provision of #affordable housing#, pursuant to Section 23-90, inclusive.

(b) #Lot coverage# requirements

#Lot coverage# requirements shall not apply ~~to any portion of a #mixed use building# in #Special Mixed Use Districts#~~.

123-641
Floor area bonus for a public plaza or arcade in connection with mixed use buildings

Any #floor area# bonus for a #public plaza# or #arcade# permitted under the applicable district regulations ~~for any #residential#, commercial or community facility portion of a #mixed use building# may be applied~~ shall apply to a #zoning lot# containing ~~to~~ a #mixed use building#, provided that any given #public plaza# or #arcade# shall be counted only once in determining a bonus.

However, on #waterfront blocks#, as defined in Section 62-11, #floor area# bonuses for a #public plaza# or #arcade# shall not apply.

* * *

123-652
Special yard regulations for mixed use buildings

No #front yards# or #side yards# are required in #Special Mixed Use Districts#. However, if any open area extending along a #side lot line# is provided at any level, such open area shall have a minimum width of eight feet; except, if the #mixed use building# contains no more than two #dwelling units#, the open area extending along a #side lot line# may be less than eight feet in width at the level of the #dwelling unit#. For a #residential# portion of a #mixed use building#, the required #rear yard# shall be provided at ~~any level not higher than~~ the floor level of the

lowest #story# containing #dwelling units# or #rooming units# where any window of such #dwelling units# or #rooming units# faces onto such #rear yard#.

* * *

123-662
All buildings in Special Mixed Use Districts with R6, R7, R8, R9 and R10 District designations

In #Special Mixed Use Districts# where the designated #Residence District# is an R6, R7, R8, R9 or R10 District, the height and setback regulations of Sections 23-60 and 43-40 shall not apply. In lieu thereof, all #buildings or other structures# shall comply with the height and setback regulations of this Section.

(a) Medium and high density non-contextual districts

In #Special Mixed Use Districts# where the designated #Residence District# is an R6, R7, R8, R9 or R10 District, except an R6A, R6B, R7A, R7B, R7D, R7X, R8A, R8B, R8X, R9A, R9X, R10A or R10X District, the height of a #building or other structure#, or portion thereof, located within ten feet of a #wide street# or 15 feet of a #narrow street#, may not exceed the maximum base height specified in Table A of this Section, except for dormers permitted in accordance with paragraph (c) of this Section. Beyond ten feet of a #wide street# and 15 feet of a #narrow street#, the height of a #building or other structure# shall not exceed the maximum #building# height specified in Table A. However, a #building or other structure# may exceed such maximum #building# height by four #stories# or 40 feet, whichever is less, provided that the gross area of each #story# located above the maximum #building# height does not exceed 80 percent of the gross area of that #story# directly below it.

Table A
HEIGHT AND SETBACK FOR ALL BUILDINGS
IN MEDIUM AND HIGH DENSITY NON-CONTEXTUAL DISTRICTS
(in feet)

District	Maximum base height	Maximum #building# height
R6	60	110
R7-1 R7-2	60	135
R7-3	85	185
R8	85	210
R9	85	225
R9-1	90	280
R10	110	350

(b) Medium and high density contextual districts

In #Special Mixed Use Districts# where the #Residence District# designation is an R6A, R6B, R7A, R7B, R7D, R7X, R8A, R8B, R8X, R9A, R9X, R10A or R10X District, no #building or other structure# shall exceed the maximum #building# height specified in Table B of this Section.

Setbacks are required for all portions of #buildings# that exceed the maximum base height specified in Table B. Such setbacks shall be provided in accordance with the following provisions:

(1) #Building# walls facing a #wide street# shall provide a setback at least ten feet deep from such wall of the #building# at a height not lower than the minimum base height specified in Table B. #Building# walls facing a #narrow street# shall provide a setback at least 15 feet deep from such wall of the #building# at a height not lower than the minimum base height specified in Table B.

(2) These setback provisions are optional for any #building# wall that is either located beyond 50 feet of a #street line# or oriented so that lines drawn perpendicular to such #building# wall would intersect a #street line# at an angle of 65 degrees or less. In the case of an irregular #street line#, the line connecting the most extreme points of intersection shall be deemed to be the #street line#.

(3) Required setback areas may be penetrated by dormers in accordance with paragraph (c) of this Section.

(4) Where the #Residence District# designation is an R10X District, no maximum #building# height shall apply. However, the minimum coverage of any portion of a #building# that exceeds the permitted maximum base height shall be 33 percent of the #lot area# of the #zoning lot#. Such minimum #lot# coverage requirement shall not apply to the highest four #stories# of the #building#.

TABLE B
HEIGHT AND SETBACK FOR ALL BUILDINGS
IN MEDIUM AND HIGH DENSITY CONTEXTUAL DISTRICTS
(in feet)

District	Minimum Base Height	Maximum Base Height	Maximum #Building# Height
R6B	30	40	50
R6A	40	60	70
R7B	40	60	75
R7A	40	65	80
R7D	60	85	100
R7X	60	85	125
R8A	60	85	120
R8B	55	60	75
R8X	60	85	150
R9A**	60	95	135
R9A*	60	102	145
R9X**	60	120	160
R9X*	105	120	170
R10A**	60	125	185
R10A*	125	150	210
R10X	60	85	***

---

* Refers to that portion of a district which is within 100 feet of a #wide street#

** Refers to that portion of a district on a #narrow street# except within a distance of 100 feet from its intersection with a #wide street#

*** #Buildings# may exceed a maximum base height of 85 feet in accordance with paragraph (b)(4) of this Section.

~~In addition, in #Special Mixed Use District# 12 in the Borough of The Bronx, at least 70 percent of the #aggregate width of street walls# shall be located within eight feet of the #street line# and shall extend to at least the minimum base height specified for the applicable district as set forth in Table B, or the height of the #building#, whichever is less. The remaining 30 percent of the #aggregate width of street walls# may be located beyond eight feet of the #street line#. Existing #buildings# may be vertically #enlarged# by up to one #story# or 15 feet without regard to the #street wall# location provisions of this paragraph.~~

(c) Permitted obstructions and dormer provisions

Obstructions shall be permitted pursuant to Sections 23-62, 24-51 or 43-42. In addition, within a required setback area, a dormer may exceed a maximum base height specified in Tables A or B of this Section and thus penetrate a required setback area, provided that, on any #street# frontage, the aggregate width of all dormers at the maximum base height does not exceed 60 percent of the length of the #street wall# of the highest #story# entirely below the maximum base height. At any level above the maximum base height, the length of a #street wall# of a dormer shall be decreased by one percent for every foot that such level of dormer exceeds the maximum base height. (See illustration of Dormer in Section 62-341).

However, all #buildings or other structures# on #waterfront blocks#, as defined in Section 62-11, shall comply with the height and setback regulations set forth for the designated #Residential District# as set forth in Section 62-34 (Height and Setback Regulations on Waterfront Blocks), inclusive.

123-67
Residential Conversion

(a) The provisions of Article I, Chapter 5 (Residential Conversion ~~of~~ within Existing ~~Non-Residential~~ Buildings) shall not apply in #Special Mixed Use Districts# except as expressly set forth herein.

In #Special Mixed Use Districts#, in any community district in the City, the #conversion# to ~~#dwelling units#~~ #residences# of non-#residential# portions of #buildings#, in existence on or prior to December 10, 1997, shall be permitted subject to Sections 15-11, 15-12 and 15-30, paragraph (b).

#Uses# in #buildings# in existence on or prior to December 10, 1997, containing both #residential# and non-#residential uses#, shall not be subject to the provisions of Section 123-31 (Provisions Regulating Location of Uses in Mixed Use Buildings).

For the purposes of applying paragraph (a) of Section 15-111 to #Special Mixed Use Districts# where the designated #Residence District# is an R3 District, the minimum #floor area# per #dwelling unit# applicable to R4 Districts shall apply.

(b) The #conversion# to ~~#dwelling units#~~ #residences# of non-#residential# portions of #buildings# constructed after December 10, 1997, shall comply with the special #bulk# regulations of this Chapter for new #residential development#.

* * *

123-73
On Waterfront Blocks

For #uses# on #waterfront blocks#, as defined in Section 62-11, the special #accessory# off-street parking and loading regulations set forth in Section 62-40, inclusive, shall apply. When any #use# is permitted in both the designated #~~Residential~~ Residence District# and the designated M1 District, the #accessory# off-street parking and loading requirements applicable to the designated M1 District shall apply to such #use#.

* * *

Article XII - Special Purpose Districts
Chapter 4
Special Willets Point District

* * *

124-01
General Provisions

The provisions of this Chapter shall apply ~~to all #developments#, #enlargements#, #extensions#, alterations and changes of #use#~~ within the #Special Willets Point District#. The regulations of all other Chapters of this Resolution are applicable, except as superseded, supplemented or modified by the provisions of this Chapter. In the event of a conflict between the provisions of this Chapter and other regulations of this Resolution, the provisions of this Chapter shall control.

* * *

124-05
Certification for Large Developments

The requirements of this Section shall apply to #zoning lots# of at least 200,000 square feet of #lot area#, containing #developments# or #enlargements# resulting in at least 100,000 square feet of #floor area# on such #zoning lots#.

No building permit shall be issued until the Chairperson of the City Planning Commission certifies to the Department of Buildings that such #developments# or #enlargements# comply with the provisions of this Section.

A set of drawings of sufficient scope and detail shall be submitted showing that:

(a) all #streets# and private streets within or abutting the proposed #development# or #enlargement# comply with the provisions of Section 124-31 (Standards for Streets and Blocks), inclusive;

(b) all #streets# and private streets within or abutting the proposed #development# or #enlargement# are constructed to grades acceptable to the Commissioner of Buildings and the Commissioner of Transportation;

(c) all publicly accessible open spaces within or abutting the proposed #development# or #enlargement# comply with the provisions of Section 124-40 (PUBLICLY ACCESSIBLE OPEN SPACE REQUIREMENTS), inclusive; and

(d) for any portion of the #Special Willets Point District# not within the <u>area</u> proposed <u>for</u> #development# or #enlargement# and for which a certification pursuant to this Section has not been obtained, plans shall be submitted showing that the #development# or #enlargement# that is the subject of this certification shall not preclude such portions of the #Special Willets Point District# from complying with the provisions of Section 124-31 and 124-40 under future certifications pursuant to this Section.

The Chairperson may allow for phased ~~#development#~~ <u>development</u> upon certification to the Commissioner of Buildings that a plan has been submitted that provides for the completion of any private streets and publicly accessible open spaces that are integral to the #development# <u>or #enlargement#</u> of a #building# or #buildings# within each phase.

The Chairperson shall modify the provisions of Section 124-31, inclusive, to the minimum extent necessary in the event that the Fire Department determines in writing that such modifications are required under law or regulation governing adequate fire access.

All required private streets and publicly accessible open spaces, once certified in accordance with the provisions of this Section, shall be duly recorded in the form of a signed declaration of restrictions, including a maintenance and operation agreement, indexed against the property,

binding the owners, successors and assigns to provide such private streets and publicly accessible open spaces and public access thereto in accordance with the plans certified by the Chairperson of the City Planning Commission. Such declaration or maintenance and operation agreement shall require that a bond be posted that would ensure that the private streets and public access areas are maintained in accordance with the declaration or maintenance and operation agreement and are closed only at authorized times. The filing of such declaration in the Borough Office of the Register of the City of New York shall be a precondition for the issuance of a building permit.

In addition, the private streets and publicly accessible open spaces integral to the #development# or #enlargement# of a #building# or #buildings# shall be recorded on the certificate of occupancy for such #building# or #buildings# by the Department of Buildings and shall be a condition of issuance of such certificate of occupancy.

* * *

124-111
Location of residential use within buildings

The provisions of Section 32-422 (Location of floors occupied by ~~non-residential~~ commercial uses) shall be modified to permit ~~#residential uses#~~ #dwelling units# or #rooming units# on the same #story# as a non-#residential use# provided no access exists between such #uses# at any level containing ~~#residences#~~ #dwelling units# or #rooming units# and provided any non-#residential uses# are not located directly over any ~~#residential uses#~~ #dwelling units# or #rooming units#. However, such non-#residential uses# may be located over ~~a #residential use#~~ #dwelling units# or #rooming units# by authorization of the City Planning Commission upon a finding that sufficient separation of #residential uses# from non-#residential uses# exists within the #building#.

* * *

124-14
Retail Continuity

The following regulations shall apply within Area A, as shown on Map 1 in the Appendix to this Chapter, to all portions of #buildings# with frontage on 126th Street, the #primary retail street#, the #retail streets#, #connector streets# and, in the event that a utility easement is retained on the #block# bounded by Roosevelt Avenue and 126th Street, along the frontage of the publicly accessible open space required by paragraph (d) of Section 124-42.

(a) Ground floor #uses#

#Uses# within #stories# ~~located~~ on the ground floor or with a floor level ~~or~~ within five feet of #base flood elevation# shall be limited to #commercial uses# permitted by the underlying district, but not including #uses# listed in Use Groups 6B, 6E, 8C, 8D, 9B, 10B or 12D, as provided in Article III, Chapter 2. A #building's# frontage shall be allocated exclusively to such #uses#, except for lobby space or entryways, parking pursuant to Section 124-50, inclusive, and vehicular access pursuant to Section 124-53 (Curb Cut Restrictions). Such #uses# shall have a minimum depth of 50 feet measured from any #street wall# facing 126th Street, the #primary retail street# or #connector streets#.

In no event shall the length of such frontage occupied by lobby space or entryways exceed, in total, 40 feet or 25 percent of the #building's# frontage, whichever is less, except that the width of a lobby need not be less than 20 feet.

(b) Maximum length of establishments facing 126th Street and the #primary retail street#

The length of ground floor frontage occupied by any establishment shall not exceed 110 feet along 126th Street and 65 feet along the #primary retail street#. Such maximum lengths shall apply within 50 feet of any #street wall# facing 126th Street and the

#primary retail street#. However, the provisions of this paragraph, (b), shall not apply within 300 feet of Northern Boulevard.

(c) Access

Access to each ground floor establishment shall be provided directly from a #street#.

(d) Transparency

For any ~~new #development# or #enlargement#~~ #building# or portion thereof #developed# or #enlarged# after November 13, 2008, each ground floor #street wall# shall be glazed with materials which may include show windows, glazed transoms or glazed portions of doors. Such glazed area shall occupy at least 70 percent of the area of each such ground floor #street wall#, measured to a height of 10 feet above the level of the adjoining sidewalk or public access area. Not less than 50 percent of such glazed area shall be glazed with transparent materials and up to 20 percent of such area may be glazed with translucent materials.

However, in locations where such ground floor #street wall# above the level of the adjoining sidewalk or public access area is below #base flood elevation#, the required glazed area shall occupy an area measured from #base flood elevation# to a height 10 feet above #base flood elevation#.

* * *

124-17
Special Permit for Cogeneration Power Plant

The Board of Standards and Appeals may permit a combined heat and power cogeneration plant not to exceed 100,000 square feet in #floor area#, provided that:

(a) the power plant is designed to maximize both electric and thermal cogeneration system efficiency to the greatest extent feasible;

(b) a detailed energy analysis is submitted to the Board demonstrating that the system as designed shall operate with maximum efficiency and perform more effectively than a traditional, power-purchased-from-grid system; and

(c) the power plant is designed primarily to serve the #Special Willets Point District#.

In addition, the Board shall refer such application to the Department of Environmental Protection for a report to ensure that the power plant is designed to maximize cogeneration efficiency to the greatest extent feasible and that the system as designed shall operate with maximum efficiency and perform more effectively than a traditional, power-purchased-from-grid system.

The Board may prescribe appropriate conditions or safeguards to minimize adverse effects on the character of the surrounding area including safety devices, emissions limits, and the concealment of such use with #building# enclosures, landscaping, buffer zones or other methods.

124-18
Special Permit for Wastewater Treatment Plant

The Board of Standards and Appeals may permit an enclosed membrane bio-reactor wastewater treatment plant not to exceed 100,000 square feet in #floor area# on a site not to exceed 40,000 square feet in area, provided that the following findings are made:

(a) that in all cases the proposed plant promotes and protects the public health, safety and general welfare;

(b) the proposed plant shall be adequate for anticipated #development# in the area to be

served;

(c) the proposed plant is designed primarily to serve the #Special Willets Point District#;

(d) the site for such #use# is so located as to minimize the adverse effects on the integrity of existing and future ~~#development#~~ development, and to minimize the interruption of the continuity of retail frontage;

(e) the architectural and landscaping treatment of such #use# shall blend harmoniously with the rest of the area; and

(f) that such #use# shall conform to the performance standards applicable to M1 Districts.

In addition, the Board shall refer such application to the Department of Health and the Department of Environmental Protection for a report to ensure that the site-specific design of the enclosed, membrane bio-reactor waste water treatment plant meets all City and State health and effluent standards.

The Board may prescribe appropriate conditions or safeguards to minimize adverse effects on the character of the surrounding area including requirements for soundproofing, safety devices, and the concealment of such #use# with #building# enclosures, landscaping, buffer zones or other methods.

* * *

124-21
Floor Area Regulations

#Zoning lots# containing less than 200,000 square feet of #lot area# shall not exceed a #floor area ratio# of 2.0.

#Zoning lots# containing at least 200,000 square feet of #lot area# shall have a maximum #floor area ratio# as follows:

(a) Within Area A, as shown on Map 1 in the Appendix of this Chapter:

(1) #Zoning lots# of at least 28 acres of #lot area# shall have a maximum #commercial~~#~~ floor area ratio# of 2.0 and a maximum total #floor area ratio# of 4.6.

(2) For #zoning lots# less than 28 acres:

(i) north of the centerline of the present or former 34th Avenue, the maximum #commercial~~#~~ floor area ratio# shall be 2.0 and the maximum total #floor area ratio# shall be 3.4.

(ii) south of the centerline of the present or former 34th Avenue, the maximum #commercial~~#~~ floor area ratio# shall be 2.0 and the maximum total #floor area ratio# shall be 5.0.

(b) Within Area B, as shown on Map 1:

(1) #Zoning lots# of at least 33 acres of #lot area# shall have a maximum #commercial~~#~~ floor area ratio# of 2.0 and a maximum total #floor area ratio# of 2.25.

(2) For #zoning lots# less than 33 acres:

(i) north of the centerline of the present or former 34th Avenue, the #floor area ratio# shall not exceed 2.0.

(ii) south of the centerline of the present or former 34th Avenue, and north and

west of the centerline of the present or former Willets Point Boulevard, the maximum #commercial~~#~~ floor area ratio# shall be 2.0 and the maximum total #floor area ratio# shall be 3.0.

(iii) south and east of the centerline of the present or former Willets Point Boulevard, the maximum #commercial~~#~~ floor area ratio# shall be 2.0 and the maximum total #floor area ratio# shall be 4.0.

124-22
Height and Setback Regulations

The height and setback regulations of this Section shall apply throughout the #Special Willets Point District#, except that #developments# or #enlargements# that result in less than 100,000 square feet of #floor area# on #zoning lots# of less than 200,000 square feet shall be limited to the height and setback regulations of an R6B District. The height of all #buildings or other structures# shall be measured from the level of the adjoining sidewalk or other publicly accessible open space. For the purposes of this Section, the present or former 34th Avenue and Willets Point Boulevard shall be considered to be #connector streets#, 127th Street shall be considered to be a #residential street#, and public access areas provided pursuant to paragraph (d) of Section 124-42 (Types and Standards of Publicly Accessible Open Space) shall be considered a #connector street#.

(a) Street wall location and base heights

(1) Except along 126th Street, Northern Boulevard and #residential streets#, at least 70 percent of the #aggregate width of street walls# shall be located within eight feet of the #street line# or public access area and shall extend without setback to a minimum base height of 60 feet or the height of the #building#, whichever is less. The maximum height of a #building or other structure# before setback shall be 85 feet. However, the minimum base height of a convention center shall be 40 feet or the height of the #building#, whichever is less.

(2) Along 126th Street, at least 80 percent of the #aggregate width of street walls# shall be located within 60 feet of the #street line# of 126th Street and shall extend to a minimum base height of 60 feet or the height of the #building#, whichever is less. The maximum height of a #building or other structure# before setback shall be 85 feet. However, for #buildings# directly opposite Citi Field Stadium, a setback lower than 60 feet shall be permitted, provided that:

(i) for #buildings# greater than 85 feet in height, an additional setback is provided between a height of 60 and 85 feet; and

(ii) eating and drinking establishments with outdoor seating on terraces overlooking 126th Street are provided on the second #story#. Such terraces shall be located on the roof level above the ground floor level of the #building#, at a height not lower than 20 feet or higher than 30 feet above the level of the sidewalk fronting the 126th Street #street wall# of the #building#, and shall have a minimum depth of 15 feet.

(3) Along #residential streets#, at least 70 percent of the #aggregate width of street walls# shall be located within eight feet of the #street line# or public access area and shall extend without setback to a minimum base height of 40 feet or the height of the #building#, whichever is less. The maximum height of a #building or other structure# before setback shall be 85 feet. Where #street walls# facing #residential streets# contain ground floor #dwelling units#, such #street walls# shall be set back at least four feet from the #street line#. The #building# may project into the required setback area, provided that:

(i) any such projection does not exceed 20 feet in width;

(ii) any such projection does not exceed 25 feet in height;

(iii) the aggregate width of all such projections at the level of any #story# shall not exceed 50 percent of the width of the #street wall# of the #building#; and

(iv) all such projections are at least 10 feet apart.

(4) Along Northern Boulvard, no portion of a #street wall# shall be located closer to Northern Boulevard than eight feet. At least 70 percent of the #aggregate width of street walls# shall be located between eight and 15 feet of the Northern Boulevard #street line# and shall extend without setback to a minimum base height of 60 feet or the height of the #building#, whichever is less, The maximum height of a #building or other structure# before setback shall be 85 feet.

(5) Wherever an open area is provided between the #street wall# of a #building# and the #street line#, such area shall be planted, except at entrances to and exits from the #building#, and except where non-#residential uses# are provided at the ground floor level of the #building#.

(b) Required setbacks and maximum #building# height

Except as provided in paragraph (c)(6) of this Section, setbacks are required for all portions of #buildings or other structures# that exceed a height of 85 feet. Such setbacks shall be provided at a height not lower than 60 feet. The depth of the required setback shall be at least 10 feet measured from any required #street wall# fronting on a #wide street#, and at least 15 feet from any required #street wall# fronting on a #narrow street#. Where portions of #buildings or other structures# that exceed a height of 85 feet are not located above a required #street wall#, such portions shall be set back at least ten feet from a #wide street line# and at least 15 feet from a #narrow street line#. However, dormers may penetrate a height of 85 feet in accordance with the provisions of paragraph (c) of Section 23-621 (Permitted obstructions in certain districts). Within the area limited to 232 feet above mean sea level, as shown on Map 3 in the Appendix to this Chapter, no portion of a #building or other structure# shall exceed a height of 120 feet except in accordance with the tower provisions of paragraph (c) of this Section.

(c) Towers

Within the area limited to 232 feet above mean sea level, as shown on Map 3, any #story# of a #building# located above a height of 120 feet shall comply with the provisions of this paragraph, (c). Such portions of a #building# are hereinafter referred to as “towers.”

(1) Maximum tower size

Each #residential story# of a tower located entirely above a height of 120 feet shall not exceed a gross area of 11,000 square feet.

(2) Maximum tower length

The maximum length of any #residential story# located entirely above a height of 120 feet shall not exceed 170 feet. Such length shall be measured by inscribing within a rectangle the outermost walls of the tower at the level of each #story# entirely above a height of 120 feet. No side of such rectangle shall exceed a length of 170 feet.

(3) Orientation

The length of any #residential story# located entirely above a height of 120 feet shall be at least 1.5 times its width and oriented so that the long side of such tower faces within 25 degrees of geographical south. Such length shall be measured by inscribing within a rectangle the outermost walls of the tower at the level of each

#story# entirely above a height of 120 feet. The orientation provisions of this paragraph, (c)(3), need not apply if at least 75 percent of all towers in the #Special Willets Point District# for which building permits have been issued comply with such provisions.

(4) Tower top articulation

For towers containing #residences#, the highest three #stories#, or as many #stories# as are located entirely above a height of 120 feet, whichever is less, shall have a #lot coverage# of at least 50 percent of the #story# immediately below such #stories#, and a maximum #lot coverage# of 80 percent of the #story# immediately below such #stories#. Such reduced #lot coverage# shall be achieved by one or more setbacks on each face of the tower, where at least one setback on each tower face has a depth of at least four feet, and a width that, individually or in the aggregate, is equal to at least 10 percent of the width of such respective tower face. For the purposes of this paragraph, (c)(4),each tower shall have four tower faces, with each face being the side of a rectangle within which the outermost walls of the highest #story# not subject to the reduced #lot coverage# provisions have been inscribed. The required setbacks shall be measured from the outermost walls of the #building# facing each tower face. Required setback areas may overlap.

(5) Distance between towers

The minimum distance between all towers shall be 60 feet.

(6) Tower walls without setbacks

To permit a #building# to rise from grade to a tower portion without setback, the setback provisions of paragraph (b) of this Section shall not apply to any portion of a #building# located within the tower wall location areas shown on Map 4, in the Appendix to this Chapter, provided that this exception from paragraph (b) of this Section shall not apply to more than one tower for each #block#.

(d) Maximum total height

Notwithstanding any other provisions of this Chapter, no #building or other structure# shall exceed the height limits ~~The maximum height of any #building or other structure# shall be as~~ depicted on Map 3. The height limits established in Map 3 include reference points for two airport approach surface areas that are continuous planes, and one area with a maximum height limitation of 232 feet above mean sea level (AMSL). The coordinates of the points are:

Point 1	73°50'42.9"W	40°45'38.1"N
Point 2	73°50'36.8"W	40°45'45.6"N
Point 3	73°50'26.6"W	40°45'39.3"N
Point 4	73°50'33.6"W	40°45'30.7"N

The height limits hereby established supersede the height limits described in Article VI, Chapter 1 (SPECIAL REGULATIONS APPLYING AROUND MAJOR AIRPORTS). Application may be made to the Board of Standards and Appeals pursuant to Section 73-66 (Height Regulations around Airports) for a permit to construct a #building or other structure# in excess of what is permitted pursuant to this paragraph, (d), provided that such application is also referred to the Port Authority of New York and New Jersey.

* * *

124-312

New streets

The provisions of this Section shall apply to all private streets constructed after November 13, 2008.

* * *

(f) #Service streets#

All newly constructed #streets#, other than those listed in paragraphs (a) through (e) of this Section, shall be improved as a #service street#. A minimum of 50 percent of the #uses# within #stories# ~~located~~ on the ground floor or with a floor level ~~or~~ within five feet of #base flood elevation# fronting a #service street# shall contain non-#residential uses#. #Service streets# shall be provided, as follows:

* * *

124-32
Street Tree Planting

All ~~new~~ #developments# or #enlargements# shall provide and maintain trees of not less than three-inch caliper at the time of planting in the sidewalk adjacent to the #building# on the side of the sidewalk closest to the travel lane. All such trees shall be provided for the entire length of the frontage of the #building#, for every 25 feet of such frontage, except where curb cuts or utilities make such planting infeasible. Species shall be selected, installed and maintained in accordance with specifications established by the Department of Parks and Recreation. However, #street# trees need not be provided where such trees may interfere with truck movements in the loading area for a convention center.

* * *

124-51
Use and Location of Parking Facilities

The provisions of this Section shall apply to all off-street parking spaces within the #Special Willets Point District#.

Floor space used for parking shall be exempt from the definition of #floor area#.

Parking facilities with over 225 parking spaces shall provide adequate reservoir space at the vehicular entrances to accommodate either ten automobiles or five percent of the total parking spaces provided in such facility, whichever amount is greater, but in no event shall such reservoir space be required for more than 50 automobiles.

(a) All off-street parking spaces shall be located within facilities that, except for entrances and exits, are located:

(1) entirely below the level of any #street# or publicly accessible open space upon which such facility, or portion thereof, fronts;

(2) in a #cellar# no more than four feet above grade within Area B, as shown on Map 1 in the Appendix to this Chapter, provided that the #street wall# is set back at least four feet from the #street line# except for projections permitted pursuant to Section 124-22, paragraph (a)(3), and planted areas are provided pursuant to Section 124-22, paragraph (a)(5), and further provided that 50 percent of such #street wall# with adjacent parking spaces consists of opaque materials;

(3) at every level above-grade, behind any #floor area# containing permitted #commercial#, #community facility# or #residential uses#, at least 25 feet from any #street wall# or public access area; or

(4) above-grade and adjacent to a #street wall# or public access area, provided that any non-horizontal parking deck structures are not visible from the exterior of the #building# in elevation view and opaque materials are located in the exterior #building# wall between the bottom of the floor of each parking deck and no less than three feet above such deck and a total of at least 50 percent of such #street wall# with adjacent parking spaces consists of opaque materials. A parking structure so screened shall be permitted only in the following locations:

(i) except within #blocks# that bound the intersection of 126th Street and Northern Boulevard or 126th Street and Roosevelt Avenue, a parking facility may be located adjacent to a #street wall# facing 126th Street above a height of 35 feet and limited to a height of 85 feet, provided that no less than 60 percent and no more than 70 percent of the surface area of the portion of such #street wall# with adjacent parking spaces consists of one or more of the following: #signs#, graphic or sculptural art, or living plant material. At least 25 feet of #floor area# containing permitted #commercial#, #community facility# or #residential uses# shall separate such parking spaces from any other adjacent #street#;

(ii) a parking facility may be located adjacent to a #street wall# limited to a height of 85 feet on a #block# that bounds the intersection of 126th Street and Northern Boulevard, provided that such #street wall# is on Northern Boulevard and is more than 100 feet from 126th Street, and provided that no less than 60 percent and no more than 70 percent of the surface area of the portion of such #street wall# with adjacent parking spaces consists of one or more of the following: #signs#, graphic or sculptural art, or living plant material. At least 25 feet of #floor area# containing permitted #commercial#, #community facility# or #residential uses# shall separate such parking spaces from adjacent #residential#, #connector# or #primary retail streets#;

(iii) a parking facility not on a #block# that bounds the intersection of 126th Street and Northern Boulevard may be located adjacent to a #street wall# limited to a height of 40 feet facing Northern Boulevard, provided that such #street wall# with adjacent parking spaces is on Northern Boulevard and is more than 100 feet from 126th Street. At least 25 feet of #floor area# containing permitted #commercial#, #community facility# or #residential uses# shall separate such parking spaces from any other adjacent #street#;

(iv) a parking facility may be located adjacent to a #street wall# on a #block# that bounds the intersection of 126th Street and Roosevelt Avenue, provided that such #street wall# with adjacent parking spaces is more than 100 feet from 126th Street, Roosevelt Avenue and at least 25 feet from any #connector street#;

(v) a parking facility may be located adjacent to a #street wall# limited to a height of 40 feet facing the eastern boundary of the #Special Willets Point District#, within 200 feet of such eastern boundary, so that such parking facility is not visible from a #connector street#. At least 25 feet of permitted #floor area# containing #commercial#, #community facility# or #residential uses# shall separate such parking spaces from adjacent #residential# and #connector streets#; and

(vi) a parking facility may be located adjacent to a #street wall# where such #street wall# is on a #service street#, provided that at least 25 feet of #floor area# containing permitted #commercial#, #community facility# or #residential uses# shall separate such parking spaces from adjacent #residential#, #connector#, #retail# or #primary retail streets#.

(b) All parking facilities with parking spaces adjacent to an exterior #building# wall that is

not a #street wall# shall provide screening of such exterior wall so that any non-horizontal parking deck structures are not visible from the exterior of the #building# in elevation view and opaque materials are located in the exterior #building# wall between the bottom of the floor of each parking deck and no less than three feet above such deck and a total of at least 50 percent of such exterior #building# wall with adjacent parking spaces consists of opaque materials.

(c) All parking facilities shall not be open to the sky, and all parking facilities shall have a roof that meets the design requirements of Section 124-34.

(d) All #accessory# off-street parking spaces may be made available for public use. However, any such space shall be made available to the occupant of a #residence# to which it is #accessory# within 30 days after written request therefore is made to the landlord. Furthermore, if #accessory# and public parking spaces are provided on the same #block#, all such spaces shall be located within the same parking facility.

~~(e) A maximum of five percent of required #accessory residential# off-street parking spaces may be made available as car share spaces. Fractions equal to or greater than one-half resulting from this calculation shall be considered to be one space. These spaces shall be #used# by motor vehicles that are provided by a certified car share operator, in accordance with the provisions of this paragraph, (e), for rental on an hourly basis. Car share spaces shall be located at unstaffed, self-service locations (except if located within a facility that includes attended parking spaces), and the certified car share operator shall not, with the exception of leased parking spaces, maintain a place of business on the #zoning lot#, have any employees located there, or erect any #sign# on any portion thereof, except that one #sign# with an area not exceeding one square foot shall be permitted. Car share spaces shall be for vehicles that are generally available for pick-up 24 hours per day. Car share spaces in accordance with the provisions of this paragraph, (e), shall not be considered #commercial uses# and shall be exempt from the definition of #floor area#. The provisions of Section 36-46 (Restrictions on Use of Accessory Off-Street Parking Spaces) shall not apply to such car share spaces. The Commissioner of the Department of Buildings shall permit car share spaces only if the Chairperson of the City Planning Commission, in consultation with the Commissioner of Transportation, has certified that:~~

~~(1) the proposed car share operator is engaged in the business of providing car share services to the general public;~~

~~(2) the owner of the #accessory# off-street parking facility has signed an agreement with such car share operator limiting any car share spaces to permitted car sharing #use#; and~~

~~(3) the number of proposed car share spaces is in compliance with this paragraph, (e).~~

~~(f)~~(e) All #accessory# off-street parking spaces may be provided within parking facilities in #buildings# other than the same #building# as the #uses# to which they are #accessory#, provided that:

(1) the off-street parking space within such facility is counted only once in meeting the parking requirements for a specific #building#; and

(2) such parking facilities are located within the #Special Willets Point District#; or

(3) such parking facilities are located within distances specified by Sections 36-421 (Maximum distance from zoning lot) and 36-43 (Off-Site Spaces for Commercial or Community Facility Uses), as applicable.

* * *

124-60
SPECIAL PERMIT TO MODIFY USE OR BULK REGULATIONS

For any ~~#development#, #enlargement#, alteration or change of #use#~~ #zoning lot# within the #Special Willets Point District#, the City Planning Commission may permit modification of the #use# or #bulk# regulations, except #floor area ratio# provisions, provided the Commission shall find that such:

(a) #use# or #bulk# modification shall aid in achieving the general purposes and intent of the Special District;

(b) #use# modification shall encourage a lively pedestrian environment along the street, or is necessary for, and the only practicable way to achieve, the programmatic requirements of the ~~#development#~~ development;

(c) #bulk# modifications shall enhance the distribution of #bulk# within the Special District;

(d) #bulk# modifications shall permit adequate access of light and air to surrounding streets; and

(e) ~~#development# or #enlargement#~~ #use# or #bulk# modification shall relate harmoniously to the character of the surrounding area.

The Commission may prescribe appropriate conditions and safeguards to minimize adverse effects on the character of the surrounding area.

* * *

Article XII - Special Purpose Districts
Chapter 5
Special Southern Hunters Point District

125-00
GENERAL PURPOSES

The "Special Southern Hunters Point District" established in this Resolution is designed to promote and protect public health, safety and general welfare. These general goals include, among others, the following specific purposes:

(a) encourage well-designed ~~new development~~ buildings that complement~~s~~ the built character of the Hunters Point neighborhood;

(b) maintain and reestablish physical and visual public access to and along the waterfront;

(c) broaden the regional choice of residences by introducing new affordable housing;

(d) achieve a harmonious visual and functional relationship with the adjacent neighborhood;

(e) create a lively and attractive built environment that will provide daily amenities and services for the use and enjoyment of area residents, workers and visitors;

(f) take maximum advantage of the beauty of the East River waterfront and provide an open space network comprised of public parks, public open space and public access areas;

(g) provide flexibility of architectural design within limits established to assure adequate access of light and air to the street, and thus to encourage more attractive and economic building forms; and

(h) promote the most desirable use of land ~~and building development~~ in accordance with the district plan for Southern Hunters Point, ~~and~~ thus conserve~~e~~ing the value of land and buildings ~~and~~ thereby protecting the City's tax revenues.

125-01
General Provisions

In harmony with the general purpose and intent of this Resolution and the general purposes of the #Special Southern Hunters Point District#, the regulations of ~~the #Special Southern Hunters Point District#~~ this Chapter shall apply ~~to all #developments#, #enlargements#, alterations and changes of #use#~~ within the #Special Southern Hunters Point District#~~, except as otherwise provided in this Chapter~~. The regulations of all other Chapters of this Resolution are applicable, except as superseded, supplemented or modified by the provisions of this Chapter. In the event of a conflict between the provisions of this Chapter and other regulations of this Resolution, the provisions of this Chapter shall control.

* * *

125-11
Ground Floor Use along Designated Streets

Map 2 (Special Ground Floor Use Regulations), in Appendix A of this Chapter, specifies locations where the special ground floor #use# regulations of this Section apply. Such regulations shall apply along the entire #street# frontage of the #building#, as indicated on Map 2.

#Uses# located on the ground floor level or within five feet of #curb level#, and within 30 feet of the #street wall# shall be limited to #commercial# or #community facility uses# permitted by the underlying district. A #building's ~~#~~ street# frontage shall be allocated exclusively to such #uses#, except for lobby space. In no event shall the length of #street# frontage occupied by

lobby space exceed, in total, 40 feet or 25 percent of the #building's# total #street# frontage, whichever is less, except that the length of lobby frontage need not be less than 20 feet.

* * *

125-13
Location of Uses in Mixed Buildings

The provisions of Section 32-422 (Location of floors occupied by ~~non-residential~~ commercial uses) are modified to permit ~~#residential uses#~~ #dwelling units# or #rooming units# on the same #story# as a non-#residential use# provided no access exists between such #uses# at any level containing ~~#residences#~~ #dwelling units# or #rooming units# and provided any non-#residential uses# are not located directly over any ~~#residential uses#~~ #dwelling units# or #rooming units#. However, such non-#residential uses# may be located over ~~a #residential uses#~~ #dwelling units# or #rooming units# by authorization of the City Planning Commission upon a finding that sufficient separation of #residential uses# from non-#residential uses# exists within the #building#.

125-14
Security Gates

All security gates that are swung, drawn or lowered to secure #commercial# or #community facility# premises shall, when closed, permit visibility of at least 75 percent of the area covered by such gate when viewed from the #street# or any publicly accessible area, except that this provision shall not apply to entrances or exits to parking garages.

* * *

125-33
Required Street Walls

(a) #Street wall# location

All #street walls# of #buildings# shall be located on #street lines# of #zoning lots# as shown on Map 3 (Street Wall Location), in Appendix A of this Chapter. For the purposes of applying the height and setback regulations of this Section, wherever a #building# fronts upon any #public park#, or any sidewalk widening, publicly accessible open area or private street ~~#developed#~~ provided in accordance with the design requirements of Sections 125-41 through 125-46, inclusive, the boundary of such #public park#, sidewalk widening, publicly accessible open area or private street shall be considered to be a #wide street line#

(b) Minimum base heights

All #street walls# shall extend up to at least a minimum base height of 50 feet or the height of the #building#, whichever is less, except that a minimum base height of 40 feet shall be permitted in the locations specified on Map 4 (Minimum Base Heights of 40 Feet), in Appendix A of this Chapter.

(c) Maximum base heights

The maximum height of a #street wall# before setback shall be 70 feet, except in the locations specified on Map 5 (Maximum Base Heights other than 70 Feet), in Appendix A of this Chapter.

(d) Recesses

Recesses, not to exceed three feet in depth, shall be permitted on the ground floor where required to provide access to the #building#, and recesses, not to exceed five feet in depth, shall be permitted on the ground floor where required to provide access to utilities.

Above the height of the second #story# or 30 feet above adjoining grade, whichever is greater, up to 30 percent of the #aggregate width of street walls# may be recessed beyond the #street line#.

(e) Required setbacks and maximum #building# heights

Setbacks are required for all portions of #buildings# that exceed the applicable maximum base height, except #schools#. All required setbacks shall be provided at a height not lower than the applicable minimum base height. A setback with a depth of at least 10 feet shall be provided from any #street wall# fronting on a #wide street#, and a setback with a depth of at least 15 feet shall be provided from any #street wall# fronting on a #narrow street#, except that the depth of such setbacks may include the depth of any permitted recesses in the #street wall#. For the purposes of this paragraph, (c), the following shall be considered #wide streets#:

(1) Second Street between 54th Avenue and Borden Avenue;

(2) 55th Avenue between Center Boulevard and Second Street; and

(3) Center Boulevard between 50th Avenue and 57th Avenue.

Above the applicable maximum base height, the maximum ~~building~~ height of a #building or other structure# shall be 125 feet, except where towers are permitted, pursuant to Section 125-34.

* * *

125-35
Authorization for Height and Setback Modifications

Within the #Special Southern Hunters Point District#, for any #development# or #enlargement#, the City Planning Commission may modify the regulations set forth in Section 125-30, inclusive, provided the Commission finds that such modifications:

(a) will result in a better distribution of #bulk# on the #zoning lot# and will not adversely affect access to light and air for surrounding public access areas, #streets# and properties;

(b) are consistent with the goals of the Special District to provide flexibility of architectural design and encourage more attractive building forms; and

(c) will result in a #development# or #enlargement# that enhances the streetscape and is compatible with ~~#development#~~ development in the surrounding area.

The Commission may prescribe additional conditions and safeguards to minimize adverse effects of the #development# or #enlargement# on the character of the surrounding area.

* * *

125-45
Publicly Accessible Open Area in Newtown Creek Subdistrict

Where a publicly accessible private open area is provided pursuant to paragraph (a) of Section 125-22, such open area shall be located as shown on Map 8 (Publicly Accessible Private Street and Open Area in Newtown Creek Subdistrict) in Appendix A of this Chapter. No excavation or building permit shall be issued for any #development# or #enlargement# on such parcel until the Chairperson of the City Planning Commission certifies to the Department of Buildings that a site plan for such open area has been submitted that is either:

(a) consistent with the Department of Parks and Recreation design standards for the #public park# located on 55th Avenue between Center Boulevard and Second Street; or

(b) in the event that design standards have not been developed for the #public park# located

on 55th Avenue between Center Boulevard and Second Street, acceptable to the Chairperson of the City Planning Commission and the Department of Parks and Recreation.

A certification under this Section shall be granted on condition that an acceptable restrictive declaration is executed and filed, binding the owners, successors and assigns to develop such publicly accessible private open area in accordance with the approved site plan and to maintain such open area in accordance with maintenance standards acceptable to the Department of Parks and Recreation. Such approved plan shall allow for pedestrian access from 55th Avenue to the #residential# entrance of a #building# bounding the publicly accessible private open area. The paved width of such access shall not exceed 13 feet, and its location shall be within the area shown on Map 8.

* * *

125-47
Phased Implementation of Publicly Accessible Areas

In the Newtown Creek Subdistrict, the Chairperson of the City Planning Commission shall allow for the phased implementation of all required publicly accessible areas upon certification to the Commissioner of Buildings that a plan has been submitted that provides for an amount of public access area proportionate to the amount of #floor area# being #developed# or #enlarged# in each phase. For any #development# or #enlargement# located within 100 feet of a #shoreline#, the initial phase shall provide, at a minimum, the required shore public walkway and any adjacent #supplemental public access areas# located between such #development# or #enlargement# and such shore public walkway. For any #development# or #enlargement# that fronts upon 54th Avenue, the initial phase shall provide, at a minimum, the required publicly accessible private street.

* * *

125-52
Location of off-street parking spaces

(a) Enclosure of spaces

All off-street parking spaces shall be located within facilities that, except for entrances and exits, are entirely below the level of any #street# or publicly accessible open area upon which such facility or portion thereof fronts, or shall be located, at every level above-grade, behind #commercial#, #community facility# or #residential floor area# so that no portion of such parking facility is visible from adjoining #streets# or publicly accessible open areas. Such #floor area# shall have a minimum depth of 30 feet.

* * *

125-53
Maximum Size of Permitted Accessory Group Parking Facilities

In the East River Subdistrict, Section 13-134 (Multiple use development) shall apply except that the maximum number of spaces ~~within a #accessory# parking facility for a multiple #use development#~~ shall be 780. Section 13-141 (Location of accessory off-street parking spaces) shall not apply.

In the Newtown Creek Subdistrict, Section 13-134 shall apply except that the maximum number of spaces ~~within a #accessory# parking facility for a multiple #use development#~~ shall not exceed 40 percent of the number of #dwelling units# within the #development# or #enlargement#.

* * *

125-55
Location of Curb Cuts

Curb cuts are permitted only in the locations indicated on Map 10 (Permitted Curb Cut Locations) in Appendix A of this Chapter. The aggregate width of all curb cuts provided for any ~~#development#~~ #building# shall not exceed 50 feet.

* * *

Article XII - Special Purpose Districts
Chapter 6
Special College Point District

* * *

126-01
General Provisions

The provisions of this Chapter shall apply ~~to all #developments#, #enlargements#, alterations and changes of #use#~~ within the #Special College Point District#. The regulations of all other Chapters of this Resolution are applicable, except as superseded, supplemented or modified by the provisions of this Chapter. In the event of a conflict between the provisions of this Chapter and other regulations of this Resolution, the provisions of this Chapter shall control.

* * *

126-11
Recreational Uses

The regulations of Section 42-10 (USES PERMITTED AS-OF-RIGHT), shall be modified to allow the following uses as-of-right within the #Special College Point District#:

From Use Group 4A:

Non-commercial recreation centers

From Use Group 4B:

Golf courses

Outdoor tennis courts or ice skating rinks, provided that all lighting shall be directed away from nearby ~~#residential zoning lots#~~ #residences#

#Public parks#, playgrounds or private parks

From Use Group 4C:

#Accessory uses#

* * *

126-13
Enclosure Regulations

The following provisions supersede Sections 42-41 (Enclosure of Commercial or Manufacturing Activities) and 42-42 (Enclosure or Screening of Storage).

All #commercial# or #manufacturing uses# established by a #development#, #enlargement#, #extension#, or change of #use#, including storage of materials or products, shall be subject to the provisions of this Section, inclusive. With respect to the #enlargement# or #extension# of an existing #use# or storage of materials or products, such provisions shall apply to the #enlarged# or #extended# portion of such #use# or storage. In addition, new #accessory# open storage or any increase in the portion of a #zoning lot# used for #accessory# open storage shall conform to the provisions of this Section.

However, these provisions shall not apply to open parking and loading areas as specifically provided in Sections 44-11 (General Provisions) and 44-51 (Permitted Accessory Off-Street Loading Berths).

* * *

126-21
Street Tree Planting

Within the #Special College Point District#, all #developments#, or #enlargements# of 20 percent or more in #floor area#, shall provide #street# trees in accordance with Section 26-41 (Street Tree Planting). In addition, any #building# where 20 percent or more of the #floor area# is #converted# ~~from a #manufacturing use# to a #commercial# or #community facility use#~~ shall provide #street# trees in accordance with Section 26-41. The #street# frontage used to calculate the number of required trees may exclude the #street# frontage occupied by curb cuts serving #uses# listed in Use Groups 16B, 16C, 16D, 17 and 18.

* * *

126-31
Parking Regulations

(a) #Accessory# off-street parking shall not be permitted within a required #front yard#.

(b) The provisions of Section 44-21 (General Provisions) pertaining to #accessory# off-street parking spaces for #commercial uses# shall be modified as follows:

Hotels, for the #floor area# used for sleeping accommodations shall be required to provide one parking space per two guest rooms or suites, and for the #floor area# used for meeting halls, auditoriums, eating or drinking places, wedding chapels or banquet halls, or radio or television studios shall be required to provide one parking space per four persons rated capacity

Places of Assembly, for #uses# in parking requirement category D in Use Group 6, 8, 9, 10 or 12, or when permitted by special permit, shall be required to provide one parking space per four persons rated capacity

(c) For #commercial uses# within the commercial areas identified on the #Special College Point District# Map, the parking requirements of a C4-1 District shall apply.

(d) Section 37-90 (PARKING LOTS), inclusive, shall apply to all ~~#developments# and #enlargements#, as defined in Section 37-91 (Applicability), that provide an~~ open parking areas #accessory# to #manufacturing uses# listed in Use Group 17. Perimeter landscaping required pursuant to Section 37-921 may overlap with required #yards#, pursuant to Section 126-231.

(e) The provisions of Section 44-23 (Waiver of Requirements for Spaces Below Minimum Number) shall only apply to #zoning lots# existing both on July 29, 2009, and on the date of application for a building permit.

* * *

126-43
Special Permit to Modify Use or Bulk Regulations

For any ~~#development#, #enlargement#, alteration or change of #use# on a~~ #zoning lot# within the #Special College Point District#, the City Planning Commission may permit modification of the #use# or #bulk# regulations, except #floor area ratio# provisions, provided the Commission finds that such:

(a) #use# or #bulk# modification will aid in achieving the general purposes and intent of the Special District;

(b) #use# modification is necessary for, and the only practicable way to achieve, the programmatic requirements of the ~~#development#~~ development;

(c) #bulk# modifications will enhance the distribution of #bulk# on the #zoning lot#;

(d) #bulk# modifications will permit adequate access of light and air to surrounding #streets# and properties; and

(e) ~~#development# or #enlargement#~~ #use# or #bulk# modification will relate harmoniously to the character of the surrounding area.

The Commission may prescribe appropriate conditions and safeguards to minimize adverse effects on the character of the surrounding area.

* * *

Article XII - Special Purpose Districts
Chapter 8
Special St. George District

* * *

128-02
General Provisions

In harmony with the general purpose and intent of this Resolution and the general purposes of the #Special St. George District#, the regulations of this Chapter shall apply ~~to all #developments#, #enlargements#, alterations and changes of #use#~~ within the #Special St. George District#. The regulations of all other Chapters of this Resolution are applicable, except as superseded, supplemented or modified by the provisions of this Chapter. In the event of a conflict between the provisions of this Chapter and other regulations of this Resolution, the provisions of this Chapter shall control.

However, the regulations of this Chapter shall not apply to any property that is the subject of a site selection for a court house and #public parking garage# pursuant to application C080379 PSR. Such property shall be governed by the underlying regulations of this Resolution.

Furthermore, any property that is the subject of a site selection and acquisition for the use of a lot for open parking pursuant to application C080378 PCR may be governed by the regulations of this Chapter or the underlying regulations of this Resolution for a period of two years after October 23, 2008. After October 23, 2010, such property shall be subject to the regulations of this Chapter.

* * *

128-053
Applicability of Article I, Chapter 5

The provisions of Article I, Chapter 5 (Residential Conversion ~~of~~ within Existing ~~Non-Residential~~ Buildings), shall apply in the #Special St. George District#, as modified in this Section. The ~~conversion to #dwelling units# of non-#residential buildings#~~ change of #non-residential floor area# to #residences# in #buildings#, or portions thereof, erected prior to January 1, 1977, shall be permitted subject to Sections 15-11 (Bulk Regulations), 15-12 (Open Space Equivalent) and 15-30 (MINOR MODIFICATIONS), paragraph (b). #Uses# in #buildings# erected prior to January 1, 1977, containing both #residential# and non-#residential uses# shall not be subject to the provisions of Section 32-42 (Location within Buildings).

* * *

128-12
Transparency Requirements

Any #street wall# of a #building developed# or #enlarged# after October 23, 2008, where the ground floor level of such #development# or #enlarged# portion of the #building# contains ~~containing ground floor~~ #commercial# or #community facility uses#, excluding #schools#, shall be glazed with transparent materials which may include show windows, glazed transoms or glazed portions of doors. Such glazed area shall occupy at least 50 percent of the area of each such ground floor #street wall# measured to a height of 10 feet above the level of the adjoining sidewalk or public access area.

128-13
Location of Uses in Mixed Buildings

The provisions of Section 32-422 (Location of floors occupied by ~~non-residential~~ commercial uses) are modified to permit ~~#residential uses#~~ #dwelling units# or #rooming units# on the same #story# as a non-#residential use# provided no access exists between such #uses# at any level

containing ~~#residences#~~ #dwelling units# or #rooming units# and provided any non-#residential uses# are not located directly over any ~~#residential uses#~~ #dwelling units# or #rooming units#. However, such non-#residential uses# may be located over ~~a #residential use#~~ #dwelling units# or #rooming units# by authorization of the City Planning Commission upon a finding that sufficient separation of #residential uses# from non-#residential uses# exists within the #building#.

128-14
Security Gates

Within the #Special St. George District#, all security gates that are swung, drawn or lowered to secure #commercial# or #community facility# premises shall, when closed, permit visibility of at least 75 percent of the area covered by such gate when viewed from the #street# or publicly accessible area, except that this provision shall not apply to entrances or exits to parking garages.

* * *

128-30
HEIGHT AND SETBACK REGULATIONS

The provisions of this Section, inclusive, shall apply to all #buildings or other structures# within the Upland Subdistrict.

In C1-2 Districts mapped within R3-2 Districts, all #buildings or other structures # shall comply with the height and setback regulations of R4 Districts, except that the maximum perimeter wall height shall be 26 feet, and the #street wall# location provisions of Section 128-32 (Street Wall Location) shall apply.

The underlying height and setback regulations of C4-2 Districts within the Upland Subdistrict shall not apply. In lieu thereof, the height and setback regulations of this Section, inclusive, shall apply.

In the Waterfront Subdistrict, the underlying height and setback regulations of Section 62-34 (Height and Setback Regulations on Waterfront Blocks) shall apply, except as modified in Section 128-31 (Rooftop Regulations).

All heights shall be measured from the #base plane#, except that wherever a minimum or maximum base height is specified for #zoning lots# with multiple #street frontages#, such heights shall be determined separately for each #street# frontage, with each height measured from the final grade of the sidewalk fronting such #street wall#.

128-31
Rooftop Regulations

The provisions of this Section shall apply to all #buildings# in C4-2 Districts within the Upland and Waterfront Subdistricts.

(a) Permitted obstructions

The provisions of Section 33-42 shall apply to all #buildings#, except that elevator or stair bulkheads, roof water tanks, cooling towers or other mechanical equipment (including enclosures), may penetrate a maximum height limit, provided that either:

(1) the product, in square feet, of the #aggregate width of street walls# of such obstructions facing each #street# frontage, times their average height, in feet, shall not exceed a figure equal to eight times the width, in feet, of the #street wall# of the #building# facing such frontage; or

(2) the #lot coverage# of all such obstructions does not exceed 20 percent of the #lot

coverage# of the #building#, and the height of all such obstructions does not exceed 40 feet. In addition, dormers may penetrate a maximum base height in accordance with the provisions of paragraph (c) of Section 23-621 (Permitted obstructions in certain districts).

(b) Screening requirements for mechanical equipment

For all #developments# and #enlargements#, and #conversions# of #non-#~~-~~residential buildings# to #residences#, all mechanical equipment located on any roof of a #building or other structure# shall be fully enclosed, except that openings in such enclosure shall be permitted only to the extent necessary for ventilation and exhaust.

128-32
Street Wall Location

(a) #Street walls# along #commercial streets#

For #zoning lots# with #commercial street# frontage, the #street wall# ~~of any #development# or #enlargement#~~ shall extend along at least 70 percent of the #commercial street# frontage of the #zoning lot# and be located within eight feet of the #street line# of the #commercial street#, or sidewalk widening line, whichever is applicable.

(b) #Street walls# along non-#commercial streets#

For #zoning lots# without #commercial street# frontage, the #street wall# ~~of any #development# or #enlargement#~~ shall extend along at least 50 percent of the #street# frontage of the #zoning lot# and be located within eight feet of the #street line# or sidewalk widening line, whichever is applicable .

In C4-2 Districts within the Upland Subdistrict, such #street walls# shall rise without setback to the minimum height specified on Map 3 (Minimum and Maximum Base Heights) in the Appendix to this Chapter, or the height of the #building#, whichever is less. When a #building# fronts on two intersecting #streets# for which different minimum base heights apply, the higher base height may wrap around to the #street# with the lower base height for a distance of up to 100 feet.

128-33
Maximum Base Height

The maximum height of a #building or other structure# before setback shall be as specified on Map 3 (Minimum and Maximum Base Heights) in the Appendix to this Chapter. Where a maximum base height of 60 feet applies as shown on Map 3, such maximum base height shall be reduced to 40 feet for #zoning lots developed# or #enlarged# pursuant to the tower provisions of Section 128-35. When a #building# fronts on two intersecting #streets# for which different maximum base heights apply, the higher base height may wrap around to the #street# with the lower base height for a distance of up to 100 feet. All portions of #buildings or other structures# above such maximum base heights shall provide a setback at least ten feet in depth measured from any #street wall# facing a #wide street# and 15 feet in depth from any #street wall# facing a #narrow street#.

In C4-2 Districts within the Upland Subdistrict, dormers may exceed the maximum base height in accordance with the provisions of paragraph (c) of Section 23-621 (Permitted obstructions in certain districts). However, on any #zoning lot# that includes a tower #developed# or #enlarged# pursuant to Section 128-35, dormers shall not be permitted.

128-34
Maximum Building Height

In C4-2 Districts within the Upland Subdistrict, for #buildings# that are not #developed# or #enlarged# pursuant to the tower provisions of Section 128-35 (Towers), the maximum ~~#building#~~ height of a #building or other structure# shall be 70 feet, except that on Bay Street where there is a maximum base height of 85 feet, the maximum ~~#building~~ height ~~#~~ of a #building or other structure# also shall be 85 feet.

In C4-2 Districts within the Upland Subdistrict for #buildings# that are #developed# or #enlarged# pursuant to the tower provisions of Section 128-35, the maximum height of the tower portion of a #building# shall be 200 feet, and the height of all other portions of the #building# shall not exceed the applicable maximum base height. Where a maximum base height of 60 feet applies as shown on Map 3 in the Appendix to this Chapter, such maximum base height shall be reduced to 40 feet for #zoning lots developed# or #enlarged# pursuant to the tower provisions of Section 128-35.

128-35
Towers

The tower provisions of this Section shall apply, as an option, to any #zoning lot# with a #lot area# of at least 10,000 square feet. Any portion of a #building developed# or #enlarged# on such #zoning lots# that exceeds the applicable maximum base height shall be constructed as either a point tower or a broad tower, as follows:

* * *

(g) Tower exclusion areas

No #building or other structure# may exceed a height of 70 feet within the areas designated on Map 4 (Tower Restriction Areas) in the Appendix to this Chapter.

* * *

128-42
Planting Areas

~~The area of the #zoning lot# between the #street line# or sidewalk widening line, where applicable, and the #street wall# of the #building# shall be planted, except at the entrances to and exits from the #building#, or adjacent to #commercial uses# fronting on the #street#.~~

The entire area of the #zoning lot# between the #street line# or sidewalk widening line, where applicable, and all #street walls# of the #building# and their prolongations shall be planted at ground level, or in raised planting beds that are permanently affixed to the ground, except that such plantings shall not be required at the entrances to and exits from the #building#, within driveways accessing off-street parking spaces located within, to the side, or rear of such #building#, or between #commercial uses# and the #street line#. No #zoning lot# shall be altered in any way that will either create a new non-compliance or increase the degree of non-compliance with the provisions of this Section.

* * *

128-51
Required Off-Street Parking and Loading

In C4-2 Districts, the following special regulations shall apply:

(a) #Residential uses#

One off-street parking space shall be provided for each #dwelling unit# created after October 23, 2008, including any #dwelling units# within #buildings~~#~~ converted# pursuant to Article 1, Chapter 5 (Residential Conversion ~~of~~ within Existing ~~Non-Residential~~

Buildings). However, where the total number of required spaces is five or less or, for #conversions#, where the total number of required spaces is 20 or less, no parking shall be required, except that such waiver provision shall not apply to any #zoning lot# subdivided after October 28, 2008. The provisions of Section 73-46 (Waiver of Requirements for Conversions) shall apply to #conversions# where more than 20 parking spaces are required.

(b) #Commercial uses#

For #commercial uses#, the off-street parking and loading requirements of a C4-3 District shall apply, except that food stores with 2,000 or more square feet of #floor area# per establishment shall require one parking space per 400 square feet of #floor area# and, for places of assembly and hotels, the off-street parking and loading requirements of a C4-2 District shall apply.

(c) #Community facility use#

For ambulatory diagnostic or treatment health care facilities listed in Use Group 4, the off-street parking requirements of a C4-3 District shall apply.

* * *

128-54
Location of Accessory Off-Street Parking Spaces

* * *

(b) located, at every level above-grade, behind #commercial#, #community facility# or #residential floor area# so that no portion of such parking facility is visible from adjoining #streets#. The minimum depth of any such #floor area# shall be 30 feet, except that such depth may be reduced to 15 feet where the #street wall# containing such #floor area# fronts upon a #street# with a slope in excess of 11 percent; and

(c) no parking shall be permitted on the roof of such facilities.

128-55
Special Requirements for Roofs of Parking Facilities

The roof of a facility containing off-street parking spaces, not otherwise covered by a #building#, which is larger than 400 square feet, shall be landscaped. No parking spaces shall be provided on the roof of such facility. Up to five percent of such roof area may be used for mechanical equipment, provided that such mechanical equipment is screened from view by a fence which is at least 75 percent opaque or by at least three feet of dense planting. No less than 75 percent of such roof area shall be accessible for the recreational use of the occupants of the #building# in which it is located; and no more than 25 percent may be accessible solely from an adjacent #dwelling unit#. Hard surfaced areas shall not cover more than 60 percent of such roof area.

* * *

Article XIII - Special Purpose Districts
Chapter 1
Special Coney Island District

* * *

131-01
General Provisions

The provisions of this Chapter shall apply ~~to all #developments#, #enlargements#, #extensions#, alterations and changes of #use#~~ within the #Special Coney Island District#. The regulations of all other Chapters of this Resolution are applicable, except as superseded, supplemented or modified by the provisions of this Chapter. In the event of a conflict between the provisions of this Chapter and other regulations of this Resolution, the provisions of this Chapter shall control.

* * *

131-042
Applicability of Article I, Chapter 5

The provisions of Article I, Chapter 5 (Residential Conversion ~~of~~ within Existing ~~Non-Residential~~ Buildings), shall apply in the #Special Coney Island District#, as modified in this Section. The ~~conversion to #dwelling units#~~ change of #non-residential floor area# to #residences# in #buildings#, or portions thereof, ~~in #buildings#~~ erected prior to January 1, 1977, shall be permitted subject to Sections 15-11 (Bulk Regulations), 15-12 (Open Space Equivalent) and 15-30 (MINOR MODIFICATIONS), paragraph (b). #Uses# in #buildings# erected prior to January 1, 1977, containing both #residential# and non-#residential uses# shall not be subject to the provisions of Section 32-42 (Location within Buildings).

* * *

131-131
Coney East Subdistrict

The #use# regulations of the underlying C7 District are modified as set forth in this Section. The locations of the mandatory ground floor #use# regulations of paragraphs (b), (c), (d) and (f) of this Section are shown on the #streets#, or portions of #streets#, specified on Map 2. #Transient hotels# and Use Groups A, B and C, as set forth in Sections 131-11 through 131-123, inclusive, and #public parking garages#, shall be the only #uses# allowed in the Coney East Subdistrict, and shall comply with the following regulations:

(a) Use Group C

Use Group C #uses# shall be limited to 2,500 square feet of #floor area# and 30 feet of #street# frontage, except that on #corner lots# one #street# frontage may extend up to 100 feet.

(b) Bowery and Wonder Wheel Way

At least 50 percent of Bowery and Wonder Wheel Way #street# frontage of any #zoning lot# shall be occupied by open #uses# listed in Use Group A1 or, if enclosed, by Use Group A1 #uses# at the ground floor level, and not more than 50 percent of the Bowery and Wonder Wheel Way #street# frontage of any #zoning lot# shall be occupied by Use Group C #uses# at the ground floor level.

(c) Surf Avenue

At least 15 percent of the #street# frontage of each #block# front bounding the south side of Surf Avenue between West 16th Street and West 10th Street shall be occupied by open #uses# listed in Use Group A1 or, if enclosed, by Use Group A1 #uses# at the ground floor level.

There shall be separate open establishments or enclosed ground floor establishments fronting upon each #block# front bounding Surf Avenue, as follows:

(1) on the #block# front bounding the southerly #street line# of Surf Avenue between Stillwell Avenue and West 12th Street there shall be at least six establishments;

(2) on the #block# front bounding the southerly #street line# of Surf Avenue between West 12th Street and West 10th Street there shall be at least six establishments;

(3) on all other #block# fronts there shall be at least four establishments;

(4) the provisions of this paragraph, (c), shall not apply along the southerly #street line# of Surf Avenue east of West 10th Street.

There may be fewer establishments fronting upon such #block# fronts than required pursuant to this paragraph, (c), where the Chairperson of the Department of City Planning certifies to the Department of Buildings that such modification is necessary to accommodate an amusement #use# listed in Use Group A1.

(d) Stillwell Avenue and West 10th Street

At least 15 percent of the Stillwell Avenue and West 10th Street #street# frontage of any #zoning lot# shall be occupied by open #uses# listed in Use Group A1 or, if enclosed, by Use Group A1 #uses# at the ground floor level.

(e) #Transient hotels#

(1) #Transient hotels# shall be permitted only on #blocks# with Surf Avenue frontage, except that no #transient hotels# shall be permitted on that portion of the #block# bounded by West 15th and West 16th Streets south of the prolongation of the centerline of Bowery.

(2) #Transient hotel use# shall not be permitted within 50 feet of Bowery on the ground floor level of a #building#, except that where a #zoning lot# has frontage only on Bowery, a #transient hotel# lobby may occupy up to 30 feet of such frontage.

(3) For #transient hotels# located on #zoning lots# with at least 20,000 square feet of #lot area#, an amount of #floor area# or #lot area# of Use Group A1 #uses# equal to at least 20 percent of the total #floor area# permitted on such #zoning lot# shall be provided either onsite or anywhere within the Coney East Subdistrict.

(4) The #street wall# of the ground floor level of a #transient hotel# shall be occupied by active #accessory uses# including, but not limited to, lobbies, retail establishments, eating and drinking establishments and amusements.

(5) #Accessory# retail establishments within a #transient hotel# shall be limited to 2,500 square feet of #floor area#.

(f) Depth of ground floor #uses#

All ground floor #uses# within #buildings# shall have a depth of at least 15 feet measured from the #street wall# of a #building#, located on #streets#, or portions of Streets#, shown on Map 2.

(g) Parcel 2

On Parcel 2, as shown on Map 2, only #uses# listed in Use Group A, and #public parking garages# of any size, shall be permitted, provided such garages comply with the provisions of Section 131-62 (Use and Location of Parking Facilities).

(h) Parcel 3

On Parcel 3, as shown on Map 2, the provisions of the underlying C7 District shall apply, except as modified in this paragraph, (h). Only open amusement #uses# listed in Use Groups 13A and 15, as set forth in Sections 32-22 and 32-24, respectively, shall be permitted.

131-132
Coney North and Coney West Subdistricts

In the Coney North and Coney West Subdistricts, #uses# allowed by the underlying district regulations shall apply, except as modified in this Section for #uses# fronting upon #streets# specified on Map 2 (Mandatory Ground Floor Use Requirements). For the purposes of this Section, the "building line" shown on Parcel F on Map 2 shall be considered a #street line# of Ocean Way or Parachute Way, as applicable. Furthermore, an open or enclosed ice skating rink shall be a permitted #use# anywhere within Parcel F in the Coney West Subdistrict.

(a) Mandatory ground floor level #uses# along certain #streets#

Any #use# listed in Use Groups A, B and C, as set forth in Section 131-12, inclusive, not otherwise allowed by the underlying district regulations, shall be permitted within 70 feet of Riegelmann Boardwalk and within 100 feet of all other designated #streets#, as shown on Map 2.

(1) Riegelmann Boardwalk

Only #uses# listed in Use Groups A, B and C and #transient hotels# located above the ground floor level are permitted within 70 feet of Riegelmann Boardwalk, except that a #transient hotel# lobby may occupy up to 30 feet of <u>such ground floor</u> frontage along Riegelmann Boardwalk. Use Group C #uses# shall be limited to 2,500 square feet of #floor area# and 30 feet of #street# frontage for each establishment. All other establishments shall be limited to 60 feet of #street# frontage, except that for any establishment on a corner, one #street# frontage may extend up to 100 feet. All ground floor #uses# <u>within #buildings#</u> shall have a depth of at least 15 feet measured from the #street wall# of the #building#.

(2) #Streets# other than Riegelmann Boardwalk

At least 20 percent of the frontage of a #building# <u>or of an open #use#</u>, on a #street# specified on Map 2, shall be allocated exclusively to #uses# listed in Use Groups A, B or C. The remaining frontage of such #building# <u>or open #use#</u>, on a specified #street#, shall be allocated to #commercial uses# permitted by the underlying district regulations or, where permitted, a #transient hotel#. In addition, a #residential# lobby may occupy up to 40 feet of frontage along a specified #street# frontage.

There shall be at least four separate ground floor <u>or open #</u>commercial<u>#</u> establishments fronting upon each #block# fronting on Surf Avenue.

All ground floor #commercial uses# <u>within #buildings#</u> shall have a depth of at least 50 feet measured from the #street wall# of the #building#. Such minimum 50 foot depth requirement may be reduced where necessary in order to accommodate a #residential# lobby and vertical circulation core.

* * *

131-16
Security Gates

All security gates installed after July 29, 2009, that are swung, drawn or lowered to secure <u>#</u>commercial<u>#</u> or <u>#</u>community facility<u>#</u> premises shall, when closed, permit visibility of at least 75 percent of the area covered by such gate when viewed from the #street#. However, this provision shall not apply to entrances or exits to parking garages, or to any #use# fronting upon

Riegelmann Boardwalk, provided that security gates at such locations that permit less than 75 percent visibility when closed shall be treated with artwork.

131-17
Authorization for Use Modifications

Along #streets# specified on Map 2 (Mandatory Ground Floor Use Requirements), other than Riegelmann Boardwalk, the City Planning Commission may authorize establishments containing Use Group A, B or C #uses# within #buildings# with a ground floor depth of less than 50 feet upon a finding that the design and operation of such establishments result in an effective and compelling amusement, entertainment or retail space that furthers the goals of the Special District.

* * *

131-30
FLOOR AREA, LOT COVERAGE AND YARD REGULATIONS

The #floor area ratio# regulations of the underlying districts shall be modified as set forth in this Section, inclusive.

131-31
Coney East Subdistrict

(a) Except on Parcel 3, as shown on Map 3 (Coney East Subdistrict Floor Area Ratios), the maximum #floor area ratio# of the underlying C7 District shall not apply. In lieu thereof, the maximum #floor area ratio# is specified for each #block#, or portion thereof, as shown on Map 3. On Parcel 2, as shown on Map 3, the maximum #floor area ratio# for a #public parking garage# shall be 4.0.

On Parcel 3, the maximum #floor area ratio# of the underlying C7 District shall apply. Furthermore, #floor area# attributable to Parcel 3 shall be used exclusively within Parcel 3.

(b) In the Coney East Subdistrict, no #rear yards# shall be required.

* * *

~~**131-326**~~
~~**Rear yards**~~

~~Required #rear yards# or #rear yard equivalents# may be provided at any level not higher than the floor level of the lowest #story# containing #dwelling units# facing onto such #yard#.~~

* * *

131-42
Coney East Subdistrict

The regulations of this Section, inclusive, shall apply to all #buildings or other structures# in the Coney East Subdistrict. Street wall location rules and maximum base height rules shall apply only to #buildings#. Maximum heights shall apply to all #buildings or other structures#.

For the purposes of applying the height and setback regulations of this Section, Jones Walk shall not be considered a #street#. Maps 4 (Street Wall Location) and 5 (Minimum and Maximum Base Heights) in the Appendix to this Chapter, illustrate the #street wall# location provisions and minimum and maximum base height provisions of this Section.

A #building or other structure# that exceeds a height limit shall be permitted where the Chairperson of the Department of City Planning certifies to the Department of Buildings that such additional height is necessary to accommodate an amusement #use# listed in Use Group

A1.

131-421
Coney East Subdistrict, south side of Surf Avenue

The following regulations shall apply along the south side of Surf Avenue and along those portions of #streets# intersecting Surf Avenue located north of a line drawn 50 feet north of and parallel to the northern #street line# of Bowery and its westerly prolongation.

(a) #Street wall# location

The #street wall# of a ~~#development# or #enlargement#~~ #building# shall be located within five feet of the #street line# and extend along the entire frontage of the #zoning lot#, except that:

(1) a sidewalk widening shall be required at the intersection of Surf Avenue and West 10th Street, extending from a point on the Surf Avenue #street line# 125 feet west of West 10th Street to a point on the West 10th Street #street line# 20 feet south of Surf Avenue. Such area shall be improved as a sidewalk to Department of Transportation standards, be at the same level as the adjoining sidewalks, and be accessible to the public at all times. Such sidewalk widening line shall be considered a #street line# for the purposes of applying the #use# and height and setback regulations of this Chapter;

(2) ground floor level recesses up to three feet deep shall be permitted for access to #building# entrances. However, for #building# entrances providing direct access to the lowest #story# located above the #base flood elevation#, such recesses shall be permitted to have a depth of up to ten feet provided the width of such recesses does not exceed 20 feet and the height of such recessed area is not less than 15 feet at any point as measured from the #base flood elevation#;

(3) to allow for corner articulation, the #street wall# may be located anywhere within an area bounded by intersecting #street lines# and lines 15 feet from and parallel to such #street lines#;

(4) to allow for portions of towers to rise without setback from grade, a portion of a #building# base below a tower may be set back ten feet from the #street line#, provided the width of such setback area is not greater than 40 percent of the width of the #street wall# of the tower, and provided such setback area complies with the provisions of Section 131-47 (Design Requirements for Ground Level Setbacks).

(b) #Building# base

(1) Surf Avenue, west of West 12th Street

West of West 12th Street, the #street wall# of a ~~#development# or #enlargement#~~ #building# shall rise without setback to a minimum base height of 35 feet or the height of the #building#, whichever is less, and a maximum base height of 45 feet. If a tower is provided, in accordance with requirements of paragraph (d) of this Section, the maximum base height shall be 65 feet. At a height no lower than the minimum base height and no higher than the maximum base height, a setback shall be required, pursuant to the provisions set forth in paragraph (c) of this Section.

For ~~#developments# or #enlargements#~~ #building# located West of West 12th Street that provide a tower in accordance with the requirements of paragraph (d) of this Section, not more than 40 percent of the #aggregate width of street walls# facing Surf Avenue shall exceed a height of 45 feet without setback, and at least 40 percent of the #aggregate width of street walls# facing Surf Avenue shall rise without setback to a height of at least 60 feet but not more than 65 feet.

Furthermore, any portion of a #street wall# which exceeds a height of 60 feet shall be located within 150 feet of the intersection of two #street lines# and shall coincide with the location of a tower. Towers shall comply with the location requirements of paragraph (d) of this Section.

(2) Surf Avenue, east of West 12th Street

East of West 12th Street, the #street wall# of a ~~#development# or #enlargement#~~ #building# shall rise without setback to a minimum base height of 35 feet or the height of the #building#, whichever is less, and a maximum base height of 45 feet. At a height no lower than the minimum base height and no higher than the maximum base height, a setback is required that shall comply with the provisions set forth in paragraph (d) of this Section.

For the base of any #building# located on the south side of Surf Avenue, above the level of the second #story#, up to 30 percent of the #aggregate width of street walls# may be recessed, provided no recesses are located within 15 feet of an adjacent #building# or within 30 feet of the intersection of two #street lines#, except where corner articulation is provided as set forth in paragraph (a)(3) of this Section.

(c) Transition height

All portions of a #building# that exceed the applicable maximum base height specified in paragraph (b) of this Section shall be set back from the #street line# at least 20 feet except that where towers are provided, the minimum setback depth from the #street line# shall be 10 feet.

(1) West of West 12th Street

All portions of a #building# that exceed the maximum base height set forth in paragraph (b)(1) of this Section shall comply with the tower provisions of paragraph (d) of this Section.

(2) East of West 12th Street

The maximum transition height shall be 65 feet, and all portions of #buildings# that exceed such height shall comply with the tower provisions of paragraph (d) of this Section, except that within 100 feet of Jones Walk on the easterly side, the maximum #building# height after the required setbacks shall be 85 feet.

(3) Special Regulations for Use Group A

The transition height regulations of paragraphs (c)(1) and (c)(2) of this Section shall not apply to #buildings# that rise to a maximum height of 85 feet to accommodate a Use Group A #use# or to #buildings# where the Chairperson of the Department of City Planning certifies to the Department of Buildings that additional height is necessary to accommodate an amusement #use# listed in Use Group A1.

(d) Towers

All #stories# of a ~~#development# or #enlargement#~~ #building# located partially or wholly above a height of 65 feet shall be considered a “tower” and shall comply with the provisions of this paragraph, (d).

(1) Maximum floorplate

Each #story# of a tower shall not exceed a gross area of 8,500 square feet.

(2) Maximum length and height

The outermost walls of all tower #stories# shall be inscribed within a rectangle, and no side of such rectangle shall exceed a length of 165 feet.

The maximum height of a #building# located between West 12th Street and Jones Walk shall be 150 feet between West 12th Street and Jones Walk. The maximum height of a #building# located between West 12th Street and West 16th Street on #zoning lots# with less than 50,000 square feet of #lot area# shall be 220 feet; on #zoning lots# with 50,000 square feet or more of #lot area#, the maximum height of a #building# shall be 270 feet. All towers that exceed a height of 150 feet shall provide articulation in accordance with Section 131-46.

(3) Tower location

All towers shall be located within 25 feet of Surf Avenue and entirely within 100 feet of an intersecting #street#.

* * *

131-423
Along all other streets

The following regulations shall apply along Wonder Wheel Way, Bowery, and all other #streets#, and portions thereof, located south of a line drawn 50 feet north of and parallel to the northern #street# line of Bowery and its westerly prolongation.

(a) #Street wall# location

The #street wall# of the ~~#development# or #enlargement#~~ #building#, or portion thereof, shall be located within five feet of the #street line#. However, for #building# entrances providing direct access to the lowest #story# located above the #base flood elevation#, a recess shall be permitted to have a depth of up to 10 feet as measured from the #street line# provided the width of such recess does not exceed 20 feet and the height of such recessed area is not less than 15 feet at any point as measured from the #base flood elevation#;

(b) Maximum ~~building~~ height

The #street wall# of a ~~#development# or #enlargement#~~ #building#, or portion thereof, shall rise to a minimum height of 20 feet and a maximum height of 40 feet before setback. The maximum height of a #building or other structure# shall be 60 feet, provided any portion of a #building# that exceeds a height of 40 feet shall be set back from the #street wall# of the #building# at least 20 feet.

West of West 12th Street, along the northern #street line# of Bowery, the maximum #building# height shall be 40 feet. If a tower is provided along the Surf Avenue portion of the #block#, 40 percent of the #aggregate width of street walls# may rise above the maximum #street wall# height of 40 feet, and such portion of the #aggregate width of street walls# shall be located within 150 feet of the intersection of two #street lines# and shall coincide with that portion of the #street wall# along Surf Avenue that rises to a height of between 60 to 65 feet, pursuant to the provisions of paragraph (b)(1) of Section 131-421. However, where the portion of the #block# that fronts on Surf Avenue is #developed# or #enlarged# pursuant to the special regulations for Use Group A in paragraph (c)(3) of Section 131-421 (Coney East Subdistrict, south side of Surf Avenue), the #street wall# may rise after a setback of 20 feet to a maximum height of 60 feet for the entire length of the Bowery #street line#, or may extend beyond the 40 percent of the #aggregate width of street wall# for the length of the #street wall# of such Use Group A #development# or #enlargement# which fronts along Surf Avenue, whichever is less.

~~Furthermore, a #building# that exceeds a height of 60 feet shall be permitted where the Chairperson of the Department of City Planning certifies to the Department of Buildings that such additional height is necessary to accommodate an amusement #use# listed in Use Group A1.~~

* * *

131-431
Coney West District, Surf Avenue

The regulations of this Section shall apply along Surf Avenue. The #street wall# location provisions of paragraph (a) of this Section shall also apply along #streets# intersecting Surf Avenue within 50 feet of Surf Avenue, and the #building# base regulations of paragraph (b) of this Section shall also apply along #streets# within 100 feet of Surf Avenue.

(a) #Street wall# location

The #street wall# of a #building# base ~~of a #development# or #enlargement#~~ shall be located on the Surf Avenue #street line# and extend along the entire Surf Avenue frontage of the #zoning lot#, except that:

(1) ground floor level recesses up to three feet deep shall be permitted for access to #building# entrances, except that for #building# entrances providing direct access to the lowest #story# located above the #base flood elevation#, such recesses shall be permitted to have a depth of up to 10 feet provided the width of such recess does not exceed 20 feet and the height of such recessed area is not less than 15 feet at any point as measured from the #base flood elevation#;

(2) to allow for corner articulation, the #street wall# may be located anywhere within an area bounded by intersecting #street lines# and lines 15 feet from and parallel to such #street lines#; and

(3) to allow for portions of towers to rise without setback from grade, a portion of a #building# base below a tower may be set back 10 feet from a #street line#, provided the width of such setback area is not greater than 40 percent of the width of the #street wall# of the tower and provided such setback area complies with the provisions of Section 131-47 (Design Requirements for Ground Level Setbacks).

(b) #Building# base

The #street wall# ~~of a #development# or #enlargement#~~ fronting on Surf Avenue shall rise without setback to a minimum height of six #stories# or 65 feet, or the height of the #building#, whichever is less, and a maximum height of eight #stories# or 85 feet, whichever is less, before a setback is required. For ~~#developments# or #enlargements#~~ #buildings# that exceed a height of eight #stories# or 85 feet, not more than 40 percent of the #aggregate width of street walls# facing Surf Avenue shall exceed a height of six #stories# or 65 feet, whichever is less, and at least 40 percent of the #aggregate width of street walls# facing Surf Avenue shall rise without setback to a height of at least eight #stories# or 80 feet, whichever is less. However, on the #block# front bounded by West 21st Street and West 22nd Street, the minimum height of a #street wall# shall be 40 feet and the maximum height of a #street wall# shall be six #stories# or 65 feet, whichever is less, before a setback is required.

Above the level of the second #story#, up to 30 percent of the #aggregate width of street walls# may be recessed, provided no recesses are located within 15 feet of an adjacent #building# or within 30 feet of the intersection of two #street lines#, except where corner articulation is provided as set forth in paragraph (a)(2) of this Section.

All portions of a #building or other structure# that exceed the maximum heights set forth in this paragraph, (b), shall be set back from the #street line# at least 10 feet.

(c) Transition height

Above the maximum base height, a #street wall# may rise to a maximum transition height of nine #stories# or 95 feet, whichever is less, provided that up to 60 percent of the #aggregate width of street walls# facing Surf Avenue shall be set back a minimum

distance of 10 feet from the Surf Avenue #street line#. The remaining portion of such #aggregate width of street walls# facing Surf Avenue shall be set back a minimum distance of 15 feet. All portions of #buildings or other structures# that exceed a transition height of 95 feet shall comply with the tower provisions of Section 131-434 (Coney West Subdistrict towers).

131-432
Along all other streets, other than Riegelmann Boardwalk

The following regulations shall apply along all other #streets# in the Coney West Subdistrict, except within 70 feet of Riegelmann Boardwalk.

(a) #Street wall# location

The #street wall# of a #building# base ~~of a #development# or #enlargement#~~, or portion thereof, beyond 50 feet of Surf Avenue shall be located within eight feet of the #street line#, except that, to allow portions of towers to rise without setback from grade, a portion of a #building# base below a tower may be set back 10 feet from the #street line#, provided the width of such setback area is not greater than 40 percent of the width of the #street wall# of the tower. In addition, for #street walls# facing Ocean Way, #building# entrances providing direct access to the lowest #story# located above the #base flood elevation# may be recessed up to a depth of 10 feet as measured from the #street line#, provided the width of such recess does not exceed 20 feet and the height of such recessed area is not less than 15 feet at any point as measured from the #base flood elevation#.

~~For #buildings# where the ground floor level is occupied by #residential uses#, any area between the #street wall# and the #street line# shall be planted except for sidewalks, steps and handicap accessible elevators that provide access to building entrances.~~

The entire area of the #zoning lot# between the #street line# and all #street walls# of the #building# and their prolongations shall be planted at ground level, or in raised planting beds that are permanently affixed to the ground, except that such plantings shall not be required at the entrances to and exits from the #building#, within driveways accessing off-street parking spaces located within, to the side, or rear of such #building#, or between #commercial uses# and the #street line#. No #zoning lot# shall be altered in any way that will either create a new non-compliance or increase the degree of non-compliance with the provisions of this Section.

(b) #Building# base

The #street wall# of a #building# base ~~of a #development# or #enlargement#~~, or portion thereof, located beyond 100 feet of Surf Avenue, shall rise without setback to a minimum height of 40 feet or the height of the #building#, whichever is less, and a maximum height of six #stories# or 65 feet, whichever is less. Up to 30 percent of the #aggregate width of street walls# may be recessed for #outer courts# or balconies, provided no recesses are located within 15 feet of an adjacent #building# or within 30 feet of the intersection of two #street lines#, and provided the maximum depth of such recesses is 15 feet, as measured from the #street line#. All portions of a #building or other structure# that exceed a height of 65 feet shall be set back from the #street wall# ~~of the #building#~~ at least 10 feet, except such setback distance may include the depth of any permitted recesses.

(c) Transition heights

Beyond 100 feet of Surf Avenue, a #street wall# may rise to a maximum transition height of nine #stories# or 95 feet, whichever is less, provided that:

(1) above the maximum base height, up to 60 percent of the #aggregate width of street walls#, measured separately, facing Ocean Way and along all other #streets#, other than Riegelmann Boardwalk, shall be set back a minimum distance of 10 feet from the #street line#. The remaining portion of such

#aggregate width of street walls# facing Ocean Way, and along all other #streets# other than Riegelmann Boardwalk, shall be set back a minimum distance of 15 feet from the #street line#, except that for #blocks# north of the Ocean Way #street line#, along a minimum of one #street line# bounding the #block# (except for Surf Avenue), the remaining portion of such #aggregate width of street walls# shall remain open to the sky for a minimum depth of 100 feet from the #street line#;

(2) for #blocks# bounding the southern #street line# of Ocean Way, any portion of a #building or other structure# that exceeds a height of six #stories# or 65 feet, whichever is less, shall be located within 80 or 100 feet of a #street line#, as indicated on Map 6 in the Appendix to this Chapter;

(3) for portions of #buildings# higher than six #stories# or 65 feet that are within 100 feet of Riegelmann Boardwalk, each #story# within such portion shall provide a setback with a depth of at least ten feet, measured from the south facing wall of the #story# directly below.

A #building or other structure# may exceed such transition heights only in accordance with the tower provisions of Section 131-434.

131-433
Riegelmann Boardwalk and building line of Parcel F

The #street wall# ~~of a #development# or #enlargement#~~ shall be located on Riegelmann Boardwalk #street line# and extend along the entire Riegelmann Boardwalk frontage of the #zoning lot# to a minimum height of 20 feet, as shown on Map 5 (Minimum and Maximum Base Heights). Any #building or other structure# within 70 feet of Riegelmann Boardwalk shall not exceed a height of 40 feet above the level of Riegelmann Boardwalk.

In addition, on Parcel F, a #street wall# ~~of the #development# or #enlargement#~~ shall be located on the Parachute Way building line and the portion of the Ocean Way building line that is within 100 feet of the Parachute Way building line, as shown on Map 4 (Street Wall Location). Such #street walls# shall extend along such entire frontages of Parcel F to a minimum height of 20 feet.

131-434
Coney West Subdistrict towers

All #stories# of a ~~#development# or #enlargement#~~ #building# or portions of other structures located partially or wholly above an applicable transition height shall be considered a "tower" and shall comply with the provisions of this Section.

(a) Maximum floorplate

Each #story# of a tower shall not exceed a gross area of 8,500 square feet.

(b) Maximum length and height

On #blocks# bounding Surf Avenue, the maximum height of a #building or other structure# shall be 220 feet, and on #blocks# bounding the southerly #street line# of Ocean Way, the maximum ~~#building#~~ height of a #building or other structure# shall be 170 feet. Furthermore, the outermost walls of all tower #stories# shall be inscribed within a rectangle, and no side of such rectangle shall exceed a length of 165 feet.

~~For #developments# that provide~~ Where #affordable housing# is provided pursuant to Section 131-321 (Special floor area regulations for residential uses), the maximum height of a #building# shall be increased to 270 feet, provided that the tower complies with either paragraph (b)(1) or (b)(2) of this Section.

(1) The outermost wall of all tower #stories# shall be inscribed within a rectangle where no side of such rectangle exceeds a length of 100 feet; or

(2) The outermost wall of all tower #stories# below a height of 120 feet shall be inscribed within a rectangle where no side of such rectangle exceeds a length of 130 feet; above a height of 120 feet, no side of such rectangle shall exceed a length of 100 feet.

Above a height of 120 feet, the maximum floor plate shall be 80 percent of the #story# immediately below such height, or 6,800 square feet, whichever is greater. Such reduced #lot coverage# shall be achieved by one or more setbacks on each face of the tower, where at least one setback on each tower face has a depth of at least five feet and a width that, individually or in the aggregate, is equal to at least 10 percent of the width of each respective tower face.

All #buildings# that exceed a height of 170 feet shall provide articulation in accordance with Section 131-46 (Tower Top Articulation).

(c) Tower location

All towers shall be located entirely within 100 feet of Parachute Way, West 20th Street, West 21st Street or West 22nd Street and within 25 feet of the intersection of two #street lines#. When a #zoning lot# fronting upon Surf Avenue contains a tower, such tower shall be located within 25 feet of Surf Avenue. No more than one tower shall be permitted on any #zoning lot#, except that ~~for #developments# that provide~~ where #affordable housing# is provided pursuant to Sections 23-90 and 131-321, no more than two towers shall be permitted on any #zoning lot#, and the second tower shall be located within 25 feet of Ocean Way. However, ~~on~~ Parcel E~~, any #development#~~ may include two towers and, ~~for #developments# that provide~~ where #affordable housing# is provided pursuant to Section 131-321, a third tower shall be permitted to be located anywhere on such parcel along Parachute Way.

131-44
Coney North Subdistrict

The regulations of this Section shall apply to all #buildings or other structures# in the Coney North Subdistrict. Maps 4 (Street Wall Location) and 5 (Minimum and Maximum Base Heights), in the Appendix to this Chapter, illustrate the #street wall# location provisions, minimum and maximum base height provisions and maximum #building# height provisions of this Section, inclusive.

131-441
Coney North Subdistrict, Surf Avenue

The regulations of this Section shall apply along Surf Avenue. The #street wall# location provisions of paragraph (a) of this Section shall also apply along #streets# intersecting Surf Avenue within 50 feet of Surf Avenue, and the #building# base regulations of paragraph (b) of this Section shall also apply along #streets# within 100 feet of Surf Avenue.

(a) #Street wall# location

The #street wall# of a #building# base ~~of a #development# or #enlargement#~~ shall be located on the Surf Avenue #street line# and extend along the entire Surf Avenue frontage of the #zoning lot#, except that:

(1) ground floor level recesses up to three feet deep shall be permitted for access to #building# entrances. However, for #building# entrances providing direct access to the lowest #story# located above the #base flood elevation#, such recesses shall be permitted to have a depth of up to 10 feet provided the width of such recess does not exceed 20 feet and the height of such recessed area is not less than 15

feet at any point as measured from the #base flood elevation#;

(2) to allow for corner articulation, the #street wall# may be located anywhere within an area bounded by intersecting #street lines# and lines 15 feet from and parallel to such #street lines#; and

(3) to allow for portions of towers to rise without setback from grade, a portion of a #building# base below a tower may be set back 10 feet from a #street line#, provided the width of such setback area is not greater than 40 percent of the width of the #street wall# of the tower and provided such setback area complies with the provisions of Section 131-47 (Design Requirements for Ground Level Setbacks).

(b) #Building# base

The #street wall# of a #building# base ~~of a #development# or #enlargement#~~ fronting on Surf Avenue shall rise without setback to a minimum height of six #stories# or 65 feet, or the height of the #building#, whichever is less, and a maximum height of eight #stories# or 85 feet, whichever is less, before a setback is required.

For ~~#developments# or #enlargements#~~ #buildings# that exceed a height of eight #stories# or 85 feet, not more than 40 percent of the #aggregate width of street walls# facing Surf Avenue shall exceed a height of 65 feet without setback, and at least 40 percent of the #aggregate width of street walls# facing Surf Avenue shall rise without setback to a height of at least 80 feet, but not more than 85 feet. However, on the portion of the #block# bounded by Stillwell Avenue and West 15th Street, for #buildings# that exceed a height of 85 feet, all #street walls# of such #building# facing Surf Avenue shall rise without setback to a height of 85 feet.

Above the level of the second #story#, up to 30 percent of the #aggregate width of street walls# may be recessed, provided no recesses are located within 15 feet of an adjacent #building# or within 30 feet of the intersection of two #street lines#, except where corner articulation is provided, as set forth in paragraph (a)(2) of this Section.

All portions of a #building or other structure# that exceed a height of 85 feet shall be set back from the #street line# at least 10 feet, and shall comply with the tower provisions of Section 131-444 (Coney North Towers).

(c) Transition height

Above the maximum base height, a #street wall# may rise to a maximum transition height of nine #stories# or 95 feet, whichever is less, provided that up to 60 percent of the #aggregate width of street walls# facing Surf Avenue shall be set back a minimum distance of 10 feet from the Surf Avenue #street line#. The remaining portion of such #aggregate width of street walls# facing Surf Avenue shall be set back a minimum distance of 15 feet. All portions of #buildings or other structures# that exceed a transition height of 95 feet shall comply with the tower provisions of Section 131-444 (Coney North Subdistrict towers).

131-442
Along all other streets, other than Stillwell Avenue

The following regulations shall apply along all other #streets# in the Coney North Subdistrict, other than Stillwell Avenue.

(a) #Street wall# location

The #street wall# of a #building# base ~~of a #development# or #enlargement#~~, or portion thereof, beyond 50 feet of Surf Avenue, shall be located within eight feet of the #street line#, except that, to allow portions of towers to rise without setback from grade, a portion of a #building# base below a tower may be recessed 10 feet from the #street line#, provided the width of such recess area is not greater than 40 percent of the width of

the #street wall# of the tower.

~~For #buildings# where the ground floor level is occupied by #residential uses#, any area between the #street wall# and the #street line# shall be planted except for sidewalks, steps and elevators for access by people with disabilities that provide access to building entrances.~~

The entire area of the #zoning lot# between the #street line# and all #street walls# of the #building# and their prolongations shall be planted at ground level, or in raised planting beds that are permanently affixed to the ground, except that such plantings shall not be required at the entrances to and exits from the #building#, within driveways accessing off-street parking spaces located within, to the side, or rear of such #building#, or between #commercial uses# and the #street line#. No #zoning lot# shall be altered in any way that will either create a new non-compliance or increase the degree of non-compliance with the provisions of this Section.

(b) #Building# base

The #street wall# of a #building# base ~~of a #development# or #enlargement#~~, or portion thereof, located beyond 100 feet of Surf Avenue, shall rise without setback to a minimum height of 40 feet, or the height of the #building#, whichever is less, and a maximum height of six #stories# or 65 feet, whichever is less. Up to 30 percent of the #aggregate width of street walls# may be recessed for #outer courts# or balconies, provided no recesses are located within 15 feet of an adjacent #building# or within 30 feet of the intersection of two #street lines#, and provided the maximum depth of such recesses is 15 feet, as measured from the #street line#.

All portions of a #building or other structure# that exceed a height of 65 feet shall be set back from the #street wall# of the #building# at least 10 feet, except such setback distance may include the depth of any permitted recesses.

(c) Transition height

In all portions of #blocks# located beyond 100 feet of Surf Avenue, a #street wall# may rise above the maximum base height to a maximum transition height of eight #stories# or 85 feet, whichever is less, provided that up to 60 percent of the #aggregate width of street walls# facing Surf Avenue shall be set back a minimum distance of 10 feet from the Surf Avenue #street line#. The remaining portion of such #aggregate width of street walls# facing Surf Avenue shall be set back a minimum distance of 15 feet. All portions of #buildings or other structures# that exceed a transition height of 85 feet shall comply with the tower provisions of Section 131-444 (Coney North Subdistrict towers).

131-443
Mermaid and Stillwell Avenues

Within 100 feet of Mermaid Avenue and within 100 feet of Stillwell Avenue, except within 100 feet of Surf Avenue, all portions of a #building or other structure# shall comply with the height and setback regulations of a C2 District mapped within an R7A District, except that the #street wall# of a #building# shall be located on the #street line# and rise without setback to a minimum height of 40 feet or the height of the #building#, whichever is less, except that:

(a) ground floor level recesses up to three feet deep shall be permitted for access to #building# entrances. However, for #building# entrances providing direct access to the lowest #story# located above the #base flood elevation#, such recesses shall be permitted to have a depth of up to 10 feet provided the width of such recess does not exceed 20 feet and the height of such recessed area is not less than 15 feet at any point as measured from the #base flood elevation#;

(b) to allow for corner articulation, the #street wall# may be located anywhere within an area bounded by intersecting #street lines# and lines 15 feet from and parallel to such #street lines#; and

(c) above the level of the second #story#, up to 30 percent of the #aggregate width of street walls# may be recessed, provided no recesses are located within 15 feet of an adjacent #building# or within 30 feet of the intersection of two #street lines#, except where corner articulation is provided as set forth in paragraph (b) of this Section.

131-444
Coney North Subdistrict towers

All #stories# of a ~~#development# or #enlargement#~~ #building# or portions of other structures located partially or wholly above a height of 85 feet within 175 feet of Surf Avenue and above a height of 65 feet beyond 175 feet of Surf Avenue shall be considered a "tower" and shall comply with the provisions of this Section.

(a) Maximum floorplate

Each #story# of a tower shall not exceed a gross area of 8,500 square feet.

(b) Maximum length and height

On #blocks# bounding Surf Avenue, the maximum height of a #building or other structure# shall be 220 feet and beyond 175 feet of Surf Avenue the maximum height of a #building or other structure# shall be 170 feet. Furthermore, the outermost walls of all tower #stories# shall be inscribed within a rectangle and no side of such rectangle shall exceed a length of 165 feet.

~~For #developments# that provide~~ Where #affordable housing# is provided pursuant to Section 131-321 (Special floor area regulations for residential uses), the maximum height of a #building# shall be increased to 270 feet, provided that the tower portion of such #building# complies with either paragraph (b)(1) or (b)(2) of this Section.

(1) The outermost wall of all tower #stories# shall be inscribed within a rectangle, where no side of such rectangle shall exceed a length of 100 feet; or

(2) The outermost wall of all tower #stories#, below a height of 120 feet, shall be inscribed within a rectangle, where no side of such rectangle shall exceed a length of 130 feet; above a height of 120 feet, no side of such rectangle shall exceed a length of 100 feet.

Above a height of 120 feet, the maximum floorplate shall be 80 percent of the #story# immediately below such height, or 6,800 square feet, whichever is greater. Such reduced #lot coverage# shall be achieved by one or more setbacks on each face of the tower, where at least one setback on each tower face has a depth of at least five feet and a width that, individually or in the aggregate, is equal to at least 10 percent of the width of each respective tower face.

All #buildings# that exceed a height of 170 feet shall provide articulation in accordance with Section 131-46 (Tower Top Articulation).

(c) Tower location

Towers shall be located within 25 feet of Surf Avenue and entirely within 100 feet of an intersecting #street#. No more than one tower shall be permitted on any #zoning lot#, except that ~~for #developments# that provide~~ where #affordable housing# is provided ~~,~~ pursuant to Sections 23-90 and 131-321, a second tower shall be permitted anywhere on the #zoning lot# that is entirely beyond 175 feet of Surf Avenue and 10 feet from any other #street#. All towers shall be located at least 10 feet from a #side lot line#.

131-45
Mermaid Avenue Subdistrict

All portions of a #building or other structure# shall comply with the height and setback regulations of a C2 District mapped within an R7A District, except that on Mermaid Avenue, and on intersecting #streets# within 50 feet of Mermaid Avenue, the #street wall# of a #building# shall be located on the #street line# and rise without setback to a minimum base height of 40 feet or the height of the #building#, whichever is less, except that:

(a) ground floor level recesses up to three feet deep shall be permitted for access to #building# entrances. However, for #building# entrances providing direct access to the lowest #story# located above the #base flood elevation#, such recesses shall be permitted to have a depth of up to 10 feet, provided the width of such recess does not exceed 20 feet and the height of such recessed area is not less than 15 feet at any point as measured from the #base flood elevation#;

(b) to allow for corner articulation, the #street wall# may be located anywhere within an area bounded by intersecting #street lines# and lines 15 feet from and parallel to such #street lines#; and

(c) above the level of the second #story#, up to 30 percent of the #aggregate width of street walls# may be recessed, provided no recesses are located within 15 feet of an adjacent #building# or within 30 feet of the intersection of two #street lines#, except where corner articulation is provided as set forth in paragraph (b) of this Section.

* * *

131-47
Design Requirements for Ground Level Setbacks

Wherever a #building# base below a tower is set back from the #street line#, and the building walls bounding such setback area are occupied by non-#residential uses#, such setback area shall comply with the provisions of this Section. Where two such setback areas adjoin one another at the intersection of two #streets#, the combined area of such spaces shall determine the applicability of such provisions.

(a) Minimum and maximum areas

No such setback area shall be less than 240 square feet nor greater than 1,000 square feet.

(b) Pavement

The setback area shall be paved with materials distinctive from the adjoining public sidewalk.

(c) Wall treatments

All ground floor level #building# walls bounding such setback area not otherwise subject to the transparency requirements of Section 131-15, shall comply with the provisions of either paragraphs (c)(1) or (c)(2) of this Section.

(1) If such #building# wall is a #street wall# wider than 10 feet, such #street wall# shall comply with the provisions of Section 131-15.

(2) All other #building# walls shall comply with one of the following provisions:

(i) such #building# walls shall be glazed with transparent materials which may include show windows, glazed transoms or glazed portions of doors. Such glazing shall occupy at least 50 percent of the area of each such ground floor level #building# wall, measured to a height of 10 feet above the level of the adjoining sidewalk, public access area or #base plane#, whichever is higher; or

(ii) such #building# walls shall be articulated with artwork or landscaping to a

height of at least ten feet.

(d) #Building# entrances

A public entrance to a #building# shall front upon such setback area. No ramps shall be permitted within the setback area.

(e) Landscaping

A minimum of 20 percent of such setback area shall be planted with, at a minimum, evergreen ground cover or shrubs in planting beds, with a minimum of six inches in height and a maximum height of four feet. Such planting beds may not occupy more than 50 percent of the width of the setback area, as measured along the #street line#.

(f) Additional amenities

For setback areas of 500 square feet or more, there shall be the following additional amenities:

(1) an additional public entrance to the #building# that fronts upon such setback area; and

(2) a minimum of one linear feet of seating for every 20 square feet of setback area shall be provided. At least 40 percent of such seating shall be fixed, of which at least half shall have backs with a minimum height of 14 inches. All fixed seating shall have a minimum depth of 18 inches and a maximum depth of 24 inches, and a minimum seat height of 16 inches and a maximum seat height of 20 inches. At least 50 percent of required seating shall be moveable chairs.

* * *

131-51
Amount of Required and Permitted Parking

(a) #Residential# and #community facility# parking

The underlying regulations shall apply, except that the number of #accessory# off-#street# parking spaces required pursuant to Section 36-331 shall be modified to require off-#street# parking spaces for at least 60 percent of #dwelling units# or #rooming units# ~~#residences#~~ #developed# under single ownership or control-where group parking facilities are provided.

(b) #Commercial# parking

The underlying regulations shall apply, except that:

(1) For Use Group A #uses#

One off-#street# parking space shall be provided for every 2,000 square feet of #floor area# or #lot area# for open #uses#, except that for a water park, two off-#street# parking spaces per 1,000 square feet of #floor area# shall be provided.

(2) For #transient hotels#

One off-#street# parking space shall be provided for every six guest rooms or suites.

(c) Public parking facilities

In accordance with the provisions of Section 131-043 (Applicability of Article VII, Chapter 4), #public parking lots# shall not be permitted, and #public parking garages# of any size shall be permitted as-of-right, provided such garages comply with the provisions

of Section 131-52 (Use and Location of Parking Facilities).

131-52
Use and Location of Parking Facilities

The following provisions shall apply to all parking facilities:

(a) All #accessory# off-street parking spaces may be made available for public use. However, any such space shall be made available to the occupant of a #residence# to which it is accessory within 30 days after written request is made to the landlord. Furthermore, if #accessory# parking spaces and spaces within a #public parking garage# are provided on the same #zoning lot#, all such spaces may be provided within the same parking facility.

(b) The off-site parking space provisions of Sections 36-42 and 36-43 shall not apply. In lieu thereof, all permitted or required off-#street# parking spaces may be provided on a #zoning lot# other than the same #zoning lot# to which such spaces are #accessory#, provided that:

(1) In the Coney East Subdistrict, such spaces are located anywhere within an area bounded on the east by Ocean Parkway, on the south by Riegelmann Boardwalk, on the west by West 27th Street and on the north by Coney Island Creek and the Belt Parkway, in accordance with all applicable underlying parking regulations.

(2) In the Coney West Subdistrict, such parking spaces #accessory# to the following sets of parcels, as shown on Map 1 in the Appendix to this Chapter, shall be located anywhere on such sets of parcels:

Parcels A and B

Parcels C and D

Parcels E and F.

(3) In the Coney North and Mermaid Avenue Subdistricts, such spaces shall be located anywhere on the same #block#.

(c) All off-#street# parking facilities shall be located within facilities that, except for entrances and exits, are:

(1) entirely below the level of any #street# or publicly accessible open area upon which such facility, or portion thereof, fronts; or

(2) located, at every level above-grade, behind #commercial#, #community facility# or #residential floor area# with a minimum depth of 15 feet as measured from the #street wall# of the #building#, so that no portion of such parking facility is visible from adjoining #streets# or publicly accessible open spaces. All such parking facilities shall be exempt from the definition of #floor area#. However, in the Coney East Subdistrict, the provisions of this paragraph, (c)(2), need not apply on the north side of Surf Avenue above the level of the ground floor, on Parcel 2 beyond 70 feet of Riegelmann Boardwalk, or on the east side of that portion of West 16th Street beyond 50 feet of Surf Avenue and Wonder Wheel Way, provided that:

(i) any non-horizontal parking deck structures shall not be visible from the exterior of the #building# in elevation view;

(ii) opaque materials are located on the exterior #building# wall between the bottom of the floor of each parking deck and no less than three feet above such deck; and

(iii) a total of at least 50 percent of such exterior #building# wall with adjacent parking spaces consists of opaque materials which may include #signs#, graphic or sculptural art, or living plant material.

(d) Any roof of a facility containing off-street parking spaces not otherwise covered by a #building#, which is larger than 400 square feet, shall be landscaped. Up to five percent of such roof area may be used for mechanical equipment, provided that such mechanical equipment is screened from view by a fence which is at least 75 percent opaque or by at least three feet of dense planting. Up to 25 percent of such roof area may be accessible solely from an adjacent #dwelling unit# and the remaining roof area shall be accessible for the recreational use of the occupants of the #building# in which it is located. Hard surfaced areas shall not cover more than 60 percent of such roof area.

131-53
Curb Cuts

No curb cuts shall be permitted on Surf Avenue, Wonder Wheel Way or Bowery except on a #zoning lot# with no frontage on any other #street#. The curb cut provisions of paragraph (c) of Section 36-58 shall apply ~~to all #developments# and #enlargements#~~.

* * *