BUILDING HVAC (2) REQUIREMENTS

COMPLEX SYSTEMS

CHAPTER 5

COMMERCIAL ENERGY EFFICIENCY

2011 New York City Energy Conservation Code

Effective from December 28, 2010

© 2011 City of New York. All rights reserved.

Acknowledgements

The New York City Department of Buildings wishes to acknowledge the generous grant from the United States Department of Energy under the American Recovery and Reinvestment Act, enacted by President Obama and Congress in 2009. This grant funded the creation of these training modules; without this support, these materials would not have been possible.

We also wish to acknowledge the support of Mayor Bloomberg and the New York City Council who created PlaNYC 2030, with a goal of reducing New York City's carbon emissions by 30% by 2030, from 2005 levels.

Copyright Materials

© 2011 City of New York. All rights reserved.

Permission is granted for the noncommercial use and reproduction of this presentation, without alteration, for educational purposes.

This training module was developed by:

Viridian Energy & Environmental, LLC

Introduction

Welcome to the New York City Department of Buildings Energy Code Training Modules!

This **HVAC-2: Complex Systems** Module addresses:

- Technical issues and strategies related to Complex Systems in 2011 NYCECC
- NYC DOB Energy Code Submission Requirements & Progress Inspection requirements

This module addresses HVAC criteria related to all commercial building types, including Group R Buildings : R-1 uses (any height); R-2 and R-3, when over 3 stories.

HVAC criteria related to low-rise residential buildings are covered under the NYC DOB Residential Training Module. This module is a continuation of HVAC-1: Mandatory Requirements & Simple HVAC Systems.

Training Module Organization

- The HVAC-2: Complex Systems Module has been divided into a number of smaller sub-topics. These can be accessed either in-sequence or out-of-sequence through links in the main “Menu” slide.
- Each sub-topic begins with a brief overview of the issues to be reviewed, and many end with a set of summary questions or exercises.
- Many of the sub-topics are organized in a Q & A format. Code-related questions are posed at the top of a slide, with answers provided below, or in the following sequence of slides.

Slide Navigation Guide

Look for the following icons:

The **NYC Buildings** logo takes you to the 2011 NYCECC Training Modules home page.

The **Menu** icon takes you to the main menu page within each module.

The **Attention** icon brings up Callouts with key points and additional information.

The **Links** icon takes you to related DOB web pages or other resources.

The **Documentation** icon addresses DOB documentation issues and requirements.

The **Inspection** icon addresses DOB Progress Inspection issues and requirements.

The **Code Reference** icon refers to relevant Code sections.

Slide Navigation Guide

Look for the following icons:

The **NYC Buildings** logo takes you to the 2011 NYCECC Training Modules home page.

The **Menu** icon takes you to the main menu page within each module.

The **Attention** icon brings up Callouts with key points and additional information.

The **Links** icon takes y

The **Documentation** icon add

The **Inspection** icon addresses DOB Progress Inspection issues and requirements.

The **Code Reference** icon refers to relevant Code sections.

The slides are enhanced with special icons that will help to focus on key points, or serve as links to external resources. The Attention icon brings up Callouts (like this one) with key points and additional information.

HVAC-2 Module Menu

Slide Navigation

Click on a sub-module to navigate directly to corresponding slides

Air-side Systems		
1. Multi-Zone Systems	System Requirements • VAV System Types & Schematics	8
2. Economizers	Types & Schematics • Code Requirements • Exceptions	16
3. Controls	Thermostatic Controls • Supply Air Reset Controls • Static Pressure & Fan Controls	20
Water-side Systems		
4. Chillers	Fundamentals • Efficiency Metrics • Types • Control Requirements	24
5. Heat Rejection Devices	Applications • Types • Control Requirements • Heat Recovery • Economizer	34
6. Hydronic System Controls	2-Pipe • 3-Pipe • Heat Pump Loop • Primary Secondary Loops • Part Load Controls	44
7. Service Hot Water	Efficiency Requirements • Controls • Insulation Requirements • Swimming Pools	51
HVAC System Documentation & Excercises		
8. Submissions & Inspections	Energy Analysis • Supporting Documentation • Progress Inspections	56
9. Resources	Abbreviations Key • References & Resources • DOB Assistance	84

HVAC-2 Module Menu

Slide Navigation

Click on a sub-module to navigate directly to corresponding slides

Air-side Systems

1. Multi-Zone Systems	System Requirements • VAV System Types & Schematics	8
2. Economizers	Types & Schematics • Code Requirements • Exceptions	16
3. Controls	Thermostatic Controls • Supply Air Reset Controls • Static Pressure & Fan Controls	20

Water-side Systems

4. Chillers	Fundamentals • Efficiency Metrics • Types • Control Requirements	24
5. Heat Rejection Devices	Applications • Types • Control Requirements • Heat Recovery • Economizer	34
6. Hydronic System Controls	Pipe • 3-Pipe • Heat Pump Loop • Primary Secondary Loops • Part Load Controls	44
7. Service Hot Water	equirements • Controls • Insulation Requirements • Swimming Pools	51

HVAC System Documentation & Exc

8. Submissions & Inspections	Energy rting Documentation • Progress Inspections	56
9. Resources		84

The main menu slide is interactive; clicking on each line item will take you to the respective sub-module. Use this feature to navigate throughout the presentation. The menu icon at the bottom right corner of each slide will always bring the you back to the main menu slide.

1. Multiple Zone Air-side Systems

Slides 8 to 15

Sub-Module Overview

In this section you will learn about:

- Code requirements for Complex air-side HVAC systems;
- Overview of Variable Air Volume (VAV) systems including general concepts, review of schematics for different configurations and key components; and
- Understand differences and requirements for Single Duct VAV, Dual Duct VAV, Single Fan Dual Duct & Mixing VAV systems.

Complex Air Side HVAC Systems

What are key Code requirements for HVAC systems serving multiple zones?

System Type Requirements:

- Air Side HVAC system serving multiple zones (or multi-zone systems) are treated as Complex HVAC
  - Systems that do not fit Simple HVAC system definition will be treated as Complex systems.
- Multiple zone air-side systems must be Variable Air Volume (VAV) type
  - Constant Air Volume (CAV or CV) system is limited and restricted
- Allowed exceptions to VAV requirement for zones :
  - With special pressurization requirements (e.g., hospitals, labs, etc)
  - With peak supply air less than 300 cfm or less
  - Where volume of air is no greater than minimum ventilation
  - Where special humidity levels are required (e.g., data center, library, museum)
  - Systems where controls prevent reheating, recooling, mixing air that has been heated or cooled, or
  - Systems where 75% of reheat energy is from site recovered sources (e.g., solar, condenser water recovery)

Complex HVAC: 503.3.; Multiple zone VAV Requirements & Exceptions: 503.4.5

Complex Air Side HVAC Systems

1. Multi Zone

What are key Code requirements for HVAC systems serving multiple zones?

VAV Air Management Requirements:

- Capability to control and reduce primary air supply to each zone
- Primary air volume shall be reduced to the greater of the following before reheating, recooling, or mixing:
  - Condition 1: 30% of max supply air to each zone

    (OR)
  - Condition 2A or 2B: 300 CFM or less if max flow rate is less than 10% of total fan system supply air flow rate

    (OR)
  - Condition 3: Minimum Ventilation rate per NYC Mech. Code

VFD Requirement for Fan Motors:

- VFDs are required for individual fans greater than 10 HP in size
- VFD must meet one of the following:
  - The fan motor shall be driven by a mechanical or electrical Variable Speed Drive or Variable Frequency Drive
  - The fan motor shall have controls or devices that will result in fan motor demand of no more than 30% of their design wattage at 50% of the design airflow

Design maximum & allowed minimum air flow rates must be indicated in VAV box schedules

Minimum of **15%** of VAV boxes must be verified during Progress Inspections. Maximum and Minimum flow rates must be confirmed through inspection or review of Testing, Adjusting, and Balancing (TAB) activities.

Fan schedules must indicate VFD

Minimum of **20%** of VFDs must be verified during Progress Inspections for presence and operation.

Multi-Zone Systems

? How is minimum Primary Air Volume calculated for a VAV zone ?

Case In Point:

Q: 5000 ft^2 classroom served by VAV fan system. Total design supply air is specified at 8000 cfm. What is the minimum primary air for this zone?

- Calculations
  - Condition 1: 30% of design supply-air to zone:
    - 8000 CFM x 30% = **2400 CFM**
  - Condition 2a or 2b: 300 CFM or less if 10% of fan system's design supply-air:
    - 8000 CFM x 10% = **800 CFM**
  - Condition 3: Ventilation rate: NYS Mechanical Code
    - 5000 ft^2 x 50 persons/1000 ft^2 x 15 CFM/person = **3750 CFM**
    - **less than 3750 CFM** per active DCV control, no lower than **2400 CFM**

A: Not required to be less than 3,750 cfm; however, with DCV control it could go as low as 2,400 cfm or lower depending on performance of the diffusers and VAV boxes.

Variable Air Volume (VAV) Description

1. Multi-Zone

? What components are commonly found in a typical Single Duct VAV System?

Heating/Cooling/Air Treatment Components:

- Preheat Coil:
  - Preheats outside air to prevent frosting of cooling coil and partial heating capacity
- Cooling Coil:
  - Provides cooling capacity (sensible + latent)
  - Can be Direct Expansion (DX) or connected to a chilled water system
- Heating Coil:
  - Provides partial heating capacity (reheat load)
- Humidifier:
  - Increases moisture content in the supply air
- Economizer:
  - Enables introduction of additional outside air to meet some or all of the cooling load when outside air conditions are suitable
- Exhaust Air Energy Recovery:
  - Preheats or pre-cools outside air by recovering energy from exhaust air

Single Duct VAV System

System Schematic

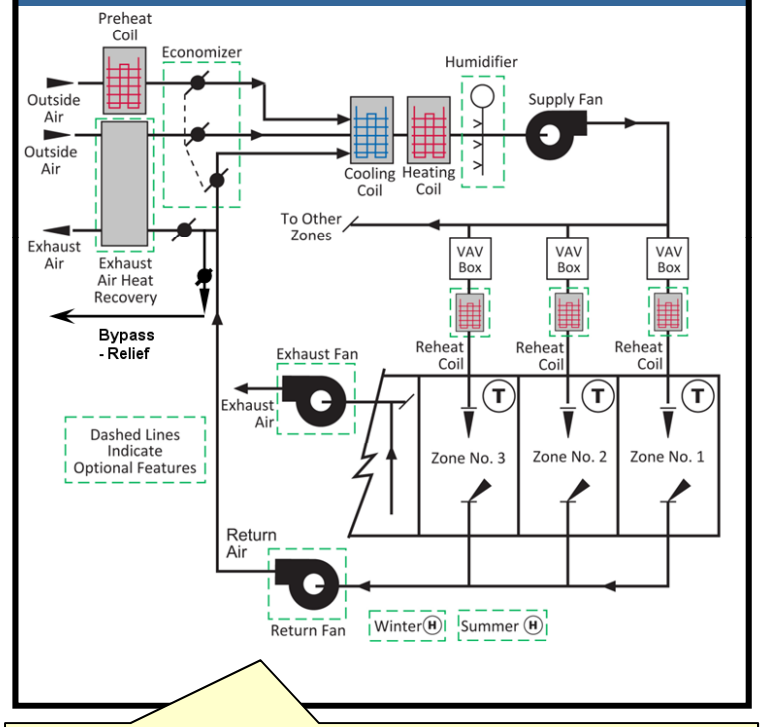

Code Impacts: Terminal VAV box volume control, economizer, energy recovery, supply temperature reset controls, damper controls, fan power limits.

Single duct VAV System: 503.4.5.1.; Economizers: 503.4.1; Energy Recovery: 503.2.6; Supply air temperature controls: 503.4.5.4; Damper Controls: 503.2.4.4

Variable Air Volume (VAV) Description

1. Multi-Zone

? What components are commonly found in a typical Single Duct VAV System?(Cont.)

Fan Components:

- Supply Fan:
  - Provides supply air to zones
- Return Fan:
  - Returns space air to the air handler
- Exhaust Fan:
  - Removes air directly from space to outside
  - Relief fan may be provided for Economizer operation

Terminal Devices:

- Consist of supply air dampers to control volume
- May consist of reheat coils to control supply air temperature in heating mode
- May have a local recirculation fan (fan-powered box)

Thermostats:

- Controls operation in terminal units of supply air damper, reheat coils and baseboards

Single Duct VAV System

System Schematic

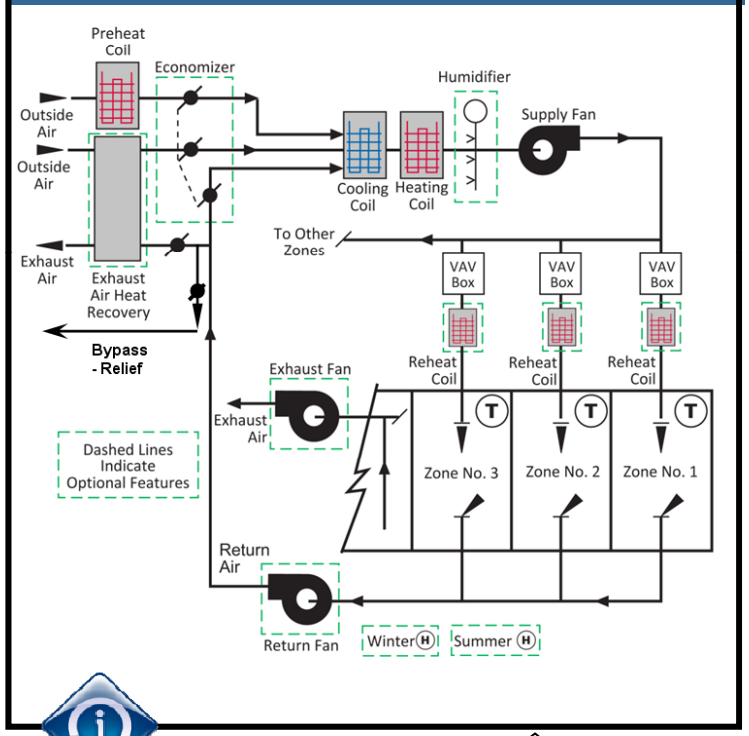

Code Impacts: Fan power limits, terminal device air volume control, thermostat set points & set backs

Fan Power Limits: 503.2.10; Terminal Devices: 503.4.5; Thermostats: 503.2.4.1

VAV System Ducting Arrangements

1. Multi-Zone

? What are requirements for Single-Duct and Dual-Duct Systems?

Single-Duct VAV systems, Terminal Devices:

- Systems have one duct usually providing cool air to terminal devices with dampers and sometimes reheat coils
- Terminal devices must reduce the supply of primary supply air before reheating or re-cooling takes place
  - Reduces unnecessary heating & cooling

Dual-Duct & Mixing VAV Systems, Terminal Devices:

- Systems have one warm air duct and one cool air duct.
- Terminal devices must reduce the flow from one duct to a minimum before mixing air from the other duct
  - Reduces unnecessary heating & cooling

VAV Single- vs. Dual-Duct

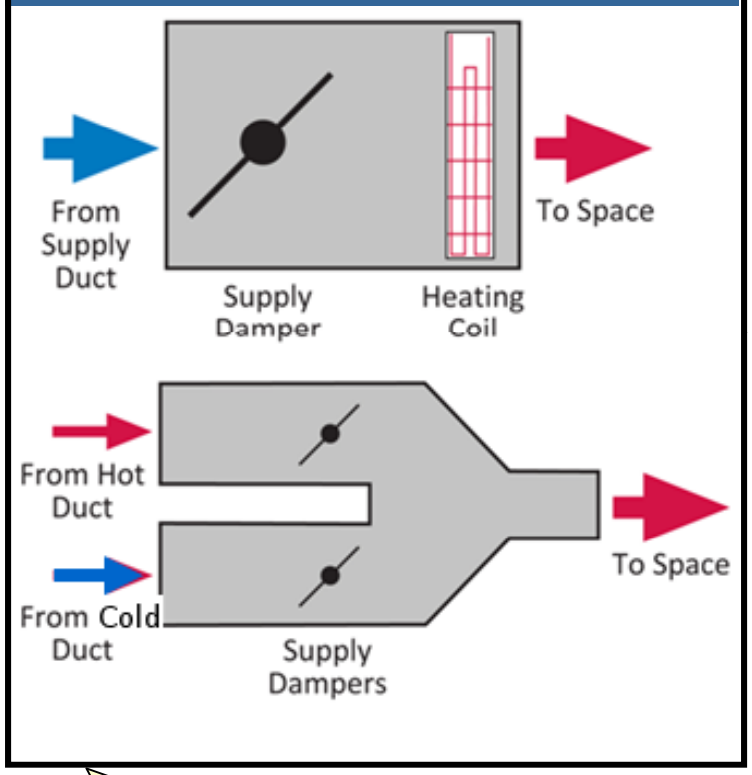

Progress inspection at terminal boxes for temperature and air volume control. Minimum of 15% of terminal equipment must be tested.

Single Duct VAV: 503.4.5.1; Dual Duct VAV Terminal Devices: 503.4.5.2

Dual-Duct VAV Systems

? What are the key Code requirements for a Dual-Duct System?

Requirements at Air Handler:

- Fan power limits, VFD, economizer, temperature reset controls, thermostat controls, DCV, damper controls
- **Economizer prohibited if total capacity exceeds 90,000 Btu/h**
- Typical components at Air-Handler
  - Central preheat coil
  - Separate supply ducts for heating and cooling (heating/cooling coils in ducts)
  - Central supply & return fans

Code requirements for Mixing Boxes:

- Reduce cold & hot air before mixing
- Supply temperature control for cooling & heating
  - Intent: Reduce energy use due to unnecessary heating and cooling

Dual-Duct VAV Schematic

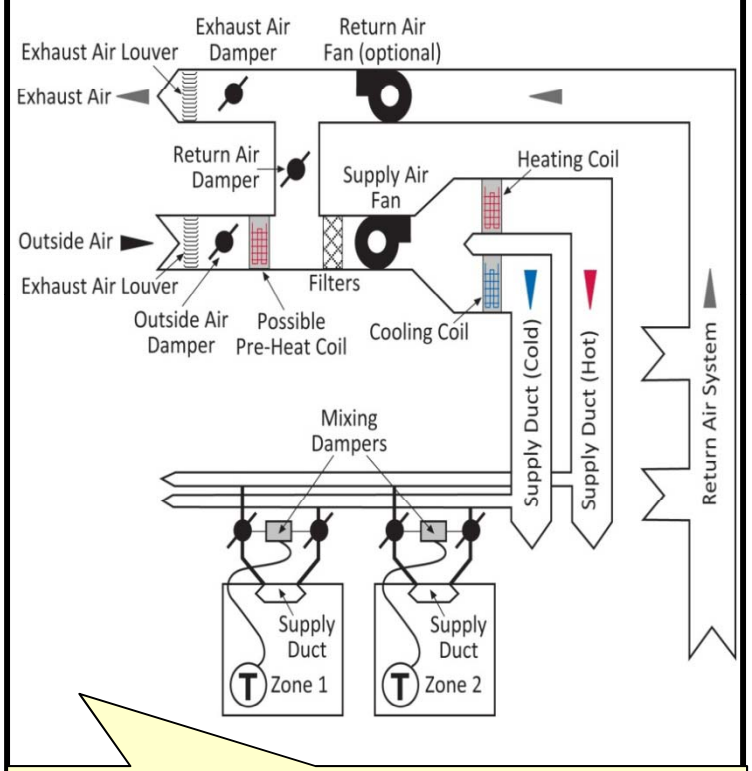

Progress inspection required controls – Thermostats & set points, Economizer, DCV, VAV fan & terminal device operation, damper controls, duct air sealing

Dual Duct VAV: 503.4.5.2 & 503.4.5.3; Progress Inspections: 1 RCNY §5000-01: IIB

2. Air-Side Economizers

Slides 16 to 19

Sub-Module Overview

In this section you will learn about:

- Code requirements for use of Air-Side Economizers;
- Types of Economizers and schematics; and
- Allowable exceptions for Economizer requirements.

Air-side Economizer Requirements

2. Economizers

When does economizer requirement become mandatory?

Economizer requirements similar to Simple HVAC Systems:

- All counties in NYC (climate zone 4-A) must follow this requirement
- **Exceptions:**
  - Systems with less than 54,000 Btu/h (4.5 tons) cooling capacity
  - Systems utilizing water-side Economizers
  - Systems which serve open-case refrigeration or that require filtration equipment to meet Code ventilation requirements
- **Prohibited:**
  - **Economizer prohibited in single fan dual duct mixing VAV system with greater than 90,000 Btu/h capacity**

ASHRAE 90.1-2007 doesn't require Economizers for climate zone 4-A

Air Side Economizer Schematic

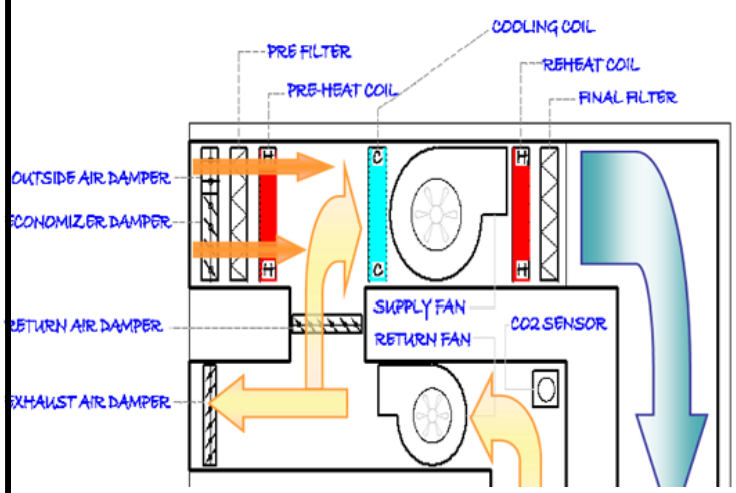

Progress inspection requires verification of minimum of 20% of Economizers operation during appropriate seasons. This includes controls, dampers, fans and mechanical cooling.

Psychrometric Properties of Air

? What properties of air are important for influencing economizer operation?

Temperature:

- Increasing temperature means higher (sensible) energy in the air, and also raises the amount of water the air is capable of containing

Humidity:

- Humidity is a measure of the moisture content of air
- Increasing humidity means higher (latent) energy in the air, which puts a higher load on a cooling system for dehumidification purposes
- Can be determined by the wet-bulb temperature of the ambient air

Enthalpy:

- Measures total energy (sensible + latent) in the air (units are Btu/Lb)
- Warmer, more moist air will always contain more energy than colder, drier air
- Cold, moist air can contain more energy than hot, dry air!

Types of Air-side Economizers

? What is economizing and what are the different types of controls?

Air-side Economizer:

- Directly introducing filtered, but unconditioned outdoor air, with a lower enthalpy or temperature than the conditioned space, to fully or partially satisfy the cooling load

Economizer Control Methods:

- Fixed Temperature (High-Limit Shut-off)
  - Measures outside air (OA) temperature only
  - Uses outside air for cooling up to the high-limit temp.
- Fixed Enthalpy (High-Limit Shut-off)
  - Measures OA temperature & humidity
  - Uses OA for cooling up to the high-limit enthalpy
- Dual (Differential) Temperature
  - Measures OA and return air (RA) temperature
  - Uses OA for cooling when OA temp. < RA temp.
- Dual (Differential) Enthalpy
  - Measures OA & RA temperature & humidity
  - Uses OA for cooling when the OA enthalpy < RA enthalpy

Economizers must be indicated on HVAC equipment schedules. Control type and sequence of operation must be provided in drawings

Types of Air-side Economizers

? What is economizing and what are the different types of controls?

Air-side Economizer:

- Directly introducing filtered, but unconditioned outdoor air, with a lower enthalpy or temperature than the conditioned space, to fully or partially satisfy the cooling load

Economizer Control Methods:

- Fixed Temperature (High-Limit Shut-off)
  - Measures outside air (OA) temperature only
  - Uses outside air for cooling up to the high-limit temp.
- Fixed Enthalpy (High-Limit Shut-off)
  - Measures OA temperature & humidity
  - Uses OA for cooling up to the high-limit enthalpy
- Dual (Differential) Temperature
  - Measures OA and return air (RA) temperature
  - Uses OA for cooling when OA temp. < RA temp.
- Dual (Differential) Enthalpy
  - Measures OA & RA temperature & humidity
  - Uses OA for cooling when the OA enthalpy < RA enthalpy

Economizers must be indicated on HVAC equipment schedules. Control type and sequence of operation must be provided in drawings

Actually prohibited by ASHRAE 90.1-07 for other climate zones, but economizer is not required in NYC (4A) under ASHRAE 90.1-07.

In any case, this economizer control strategy is not recommended for the NYC climate.

3. Controls (Air-Side, Complex Systems)

Slides 20 to 23

Sub-Module Overview

In this section you will learn about:

- Thermostatic control requirements;
- Supply air reset controls requirements; and
- Static pressure and fan control requirements.

Thermostatic Controls

What are the Zone Level Thermostatic Requirements Applicable to VAV Systems?

Thermostat Location / Placement Requirement:

- Thermostats must be located within each zone AND must control space temperature.

Control Dead-Band Requirement:

- Heating & cooling set-points must be sufficiently far apart so the unit does not over-respond when in one mode of operation and require a correction from the other.
  - Code minimum is 5°F

Night/Unoccupied Setback Requirement:

- Lower heating and higher cooling set-points required during nights /unoccupied periods
- Outside air intake must be reduced, or stopped, during the unoccupied period

	Cooling	Heating
Set Point	75°F	70°F
Set Back	85°F	55°F

Thermostat locations must be indicated on zone level plans. Control set points and setback must be indicated in sequence of operations.

Visual inspection required in minimum of 20% sample of units for effective operation for set points, set backs and off-hour controls as part of DOB Progress Inspections

Supply Air Temperature Controls

What are the rules governing the supply air temperature controls?

Supply Air Temperature Reset:

- Automatic controls required for multiple zone systems to reset supply air temperature.
  - In response to zone loads (and / or)
  - In response to outdoor air temperature (& humidity)
    - Intent: Reduces the heating and cooling energy during low-load conditions
- Minimum required reset: 25% of the difference between design supply air & space temperature
- **Exceptions:**
  - Systems that prevent (entirely) reheating, recooling, or mixing of heated and cooled supply air
  - Systems in which 75% of the energy for reheating is from site-recovered or site solar energy sources
  - Zones with peak supply air quantities of 300 CFM or less

Supply air temperature reset control must be indicated on drawings

Sample of 20% of these controls must be verified during Progress Inspections

Supply air temperature controls: 503.4.5.4;

Supply Air Temperature Controls

What are the rules governing the supply air temperature controls?

Supply Air Temperature Reset:

- Automatic controls required for multiple zone systems to reset supply air temperature.
  - In response to zone loads (and / or)
  - In response to outdoor air temperature (& humidity)
    - Intent: Reduces the heating and cooling energy during low-load conditions
- Minimum required reset: 25% of the difference between design supply air & space temperature
- **Exceptions:**
  - Systems that prevent (entirely) reheating, recooling, or mixing of heated and cooled supply air
  - Systems in which 75% of the energy for reheating is from site-recovered or site solar energy sources
  - Zones with peak supply air quantities of 300 CFM or less

Supply air temperature reset control must be indicated on drawings

Sample of 20% of these controls must be verified during Progress Inspections

For example, a typical design temperatures are 55˚F supply air and a 75˚F space temperatures.

Thus, 25% of the 20˚F design temperature difference is 5˚F, and the system would have to increase the supply air temperature based on load to 60˚F during low load conditions.

Supply air temperature controls: 503.4.5.4;

Static Pressure & Fan Controls

What are the Details of Static Pressure and Fan Controls?

Static Pressure (SP) Reset:

- SP based reset control required where there is DDC control at VAV boxes
  - Intent: Reduces fan energy consumption when loads are satisfied in most zones.

Fan Controls:

- Electrical or mechanical variable speed drives are required for fan motors greater than 10 HP.
  - Or fan control device results in 30% design power at 50% design flow when SP set-point is 33% of total design static pressure.

DDC & SP Reset control must be indicated on drawings

Sample of 20% of SP Reset controls must be verified during Progress Inspections

Fan VFD & Static Pressure controls: 503.4.2

4. Chillers

Slides 24 to 33

Sub-Module Overview

In this section you will learn about:

- What a Chiller is – as well as different Chiller technologies such as Vapor-Compression Chillers and Absorption Chillers;
- Condenser types; and
- Rating conditions / controls.

Chillers

? What is a Chiller?

Review of Basic Refrigeration Cycle:

- Chillers extract heat and cool a liquid (Water, Brine, Glycol)
  - Can use a Vapor Compression or Absorption Cycle
- Condensers reject heat
  - Can be air-cooled or water-cooled

Vapor Compression Chiller Types:

- Positive Displacement
  - Reciprocating
  - Rotary (Screw & Scroll)
- Centrifugal

Schematic: Vapor Compression

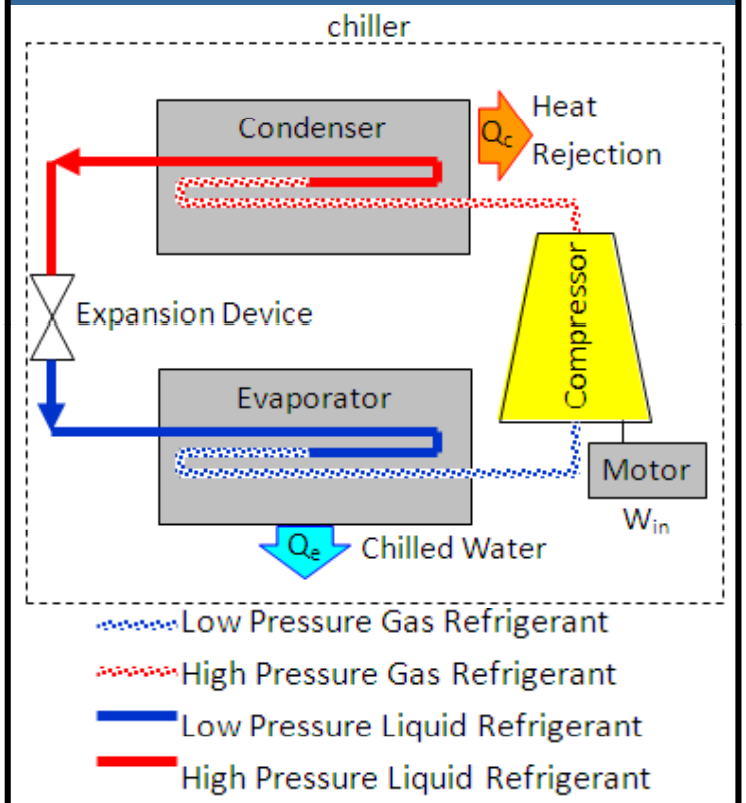

Chiller Efficiency Requirements: Table 503.2.3(7)

Efficiency Metrics for Chillers

How are Chillers Rated for Efficiency?

EER (Energy Efficiency Ratio):

- Denotes full-load efficiency
- Typically used for air-cooled Chillers

KW/Ton:

- Full- and part-load efficiency metric
- Typically used for water-cooled Centrifugal and Positive Displacement Chillers

COP (Coefficient Of Performance):

- Full- and part-load efficiency metric
- Absorption Chillers

Meet One of Two Compliance Paths:

- Compliance Path-A:
  - Optimized for full-load operation – ideal for base-loaded Chillers
- Compliance Path-B:
  - Optimized for part-load operation – ideal for trim-loaded Chillers

Chiller efficiency at full-load and IPLV must be indicated on drawings and must correspond to design chilled water (CLWT) temperatures and condenser water temperature (CEWT) & flow rates per AHRI 550/590 standard or must follow NPLV calculation method.

100% of the Chillers must be verified during Progress Inspections. Name plate and manufacturer's test data must be furnished in Supporting Documentation

Chiller Efficiency Requirements: Table 503.2.3(7) & NPLV: 503.2.3

Rating Conditions

How are chillers rated for efficiency?

AHRI 550/590:

- Standard utilized for rating Chillers

EER (Energy Efficiency Ratio):

- Single efficiency rating point at full load:
  - Chilled Water: 44°F @2.4 GPM / Flow Rate
  - Condensing Water: 85°F (Water-Cooled) @3 GPM / Ton Flow Rate
  - Air Cooled: 95°F Outdoor Air Temp

IPLV (Integrated Part-Load Value):

- Calculated from multiple efficiency rating points:
  - Efficiency metric for measuring part-load conditions
  - Weighted average calculation taken at the part-load scenarios

NPLV (Nonstandard Part-Load Value):

- For non AHRI 550/590 rating conditions

IPLV Rating Conditions		
Load	% Time	Condenser Water Temp.
100%	1%	85
75%	42%	75
50%	45%	65
25%	12%	65

Chiller efficiency at full load & IPLV must be indicated on drawings and must correspond to design chilled-water (CLWT) temperatures and condenser-water temperature (CEWT) & flow rates per AHRI 550/590 standard or per NPLV calculation method.

100% of the must be verified during Progress Inspections

ASHRAE has look-up tables for different non-standard scenarios.

Chiller Efficiency Requirements: Table 503.2.3(7) & NPLV: 503.2.3

Chiller Efficiency Requirements

4. Chillers

How are Chillers Rated for Efficiency?

Establish applicable equipment type and size, and select between Path A or Path B for compliance. Ensure the efficiency values are derived for standard rating conditions. Other rating conditions are allowed if they follow NPLV method.

2011 NYCECC, TABLE 503.2.3 (7)

Water Chilling Packages, Minimum Requirements			Path A		Path B		
Equipment Type	Size Category	Units	Full Load	IPLV	Full Load	IPLV	Test Procedure
Air Cooled Chiller	< 150 Tons	EER	>=9.562	>=12.5	NA	NA	AHRI 550/590
	>= 150 Tons	EER	>=9.562	>=12.5	NA	NA	
Air Cooled, without Condenser, electrically operated	All Capacities	EER	Air Cooled chillers without condensers must be rated with matching condensers and comply with the air cooled chiller				
Water Cooled, Electrically operated, Reciprocating	All Capacities	kW/Ton	Reciprocating Units must comply with water cooled positive displacement efficiency requirements				AHRI 550/590
Water Cooled, Electrically operated, Positive Displacement	< 75 Tons		<=0.780	<=0.630	<=0.800	<=0.600	
	>= 75 Tons & <150 Tons		<=0.775	<=0.615	<=0.790	<=0.586	
	>= 150 Tons & <300 Tons		<=0.680	<=0.580	<=0.718	<=0.540	
	> 300 Tons		<-0.620	<=0.540	<=0.639	<=0.490	
Water Cooled, Electrically operated, Centrifugal	< 150 Tons	kW/Ton					AHRI 550/590
	>= 150 Tons & <300 Tons		<=0.634	<=0.596	<=0.639	<=0.450	
	>= 300 Tons & <600 Tons		<=0.576	<=0.549	<=0.600	<=0.400	
	> 150 Tons		<-0.570	<=0.539	<=0.590	<=0.400	

Efficiency Metrics

? Which Chiller Efficiency Metrics Apply for Non-Standard Operating Conditions?

NPLV (Non-standard Part-Load Value):

- Single number part-load efficiency metric analogous to IPLV
- Different rating conditions (non-standard) than for IPLV
- Applicable for non-standard operating conditions within limits:
  - Minimum leaving chilled water 38°F
  - Maximum condensing entering water temperature: 102°F
  - Condensing water flow rate: 1 to 6 gpm/ton
- Calculation formula: Refer to Code

Code Exempt Chiller Applications:

- Chillers operating outside these ranges
- Applications utilizing fluids or solutions with secondary coolants with freeze point less than 27°F (e.g., brine, water/glycol)

Non Standard Adjustment Factor

Full Load and IPLV values from Table 503.2.3(7)

Adjusted Values = Table values / K_{adj}

$K_{adj} = 6.174722 - 0.303668(X) + 0.00629466 (X)^2 - 0.000045780 (X)^3$

$X = DT_{std} + LIFT$

DT_{std} = { 24 + [Full load kW/ton from table 503.2.3(7)] x 6.83} / Flow

Flow = Condenser Water Flow (GPM) Cooling Full Load Capacity (tons)

Lift = CEWT – CLWT (°F)

CEWT = Full Load Condenser Entering Water Temperature (°F)

CLWT = Full Load Leaving Chilled Water Temperature (°F)

Supporting Documents must include all values needed for K_{adj}

Vapor Compression Chillers

What are the Different Types of Compressors Used in Chillers?

Positive Displacement Chillers:

- **Operating principle:** Refrigerant gas becomes trapped within a chamber whose volume decreases as it is mechanically compressed.
- **Reciprocating:**
  - Constructed similar to a car engine
  - Motor turns crankshaft
  - Pistons compress refrigerant gas
  - Typical capacity 2 - 60 tons
- **Rotary Screw:**
  - Helical Screws mesh and rotate together
  - Refrigerant gas compressed as volume between screws decreases
  - Typical capacity 70 - 200 tons (up to 500 tons)
- **Rotary Scroll:**
  - Two spiral scrolls 1 stationary, 1 orbiting
  - Refrigerant gas compressed as volume between scrolls decreases
  - Typical capacity 20 - 200 tons (up to 500 tons)

Reciprocating Chiller

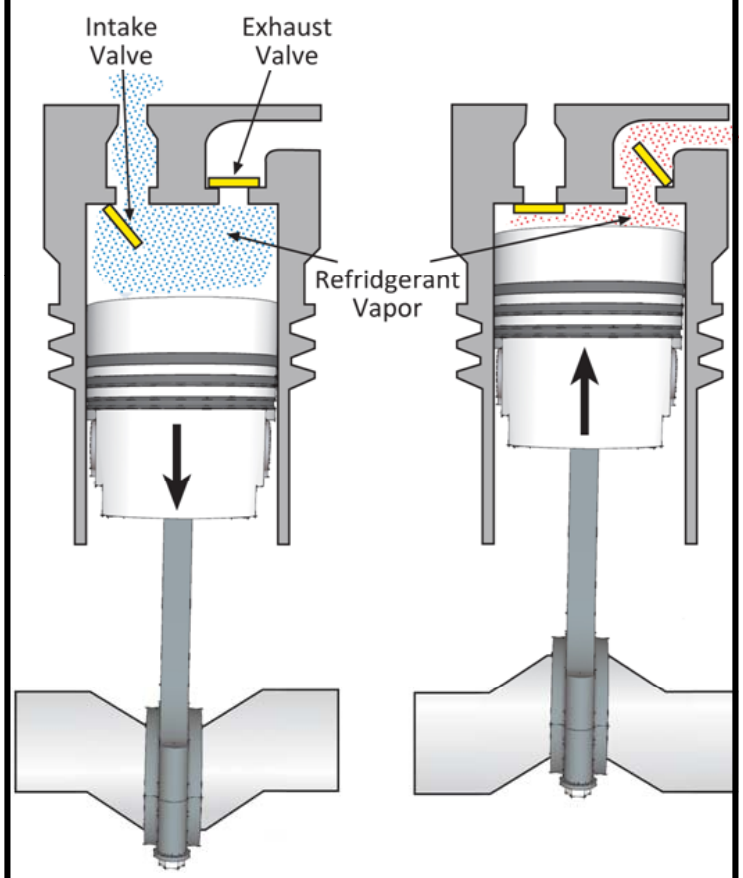

Chiller Efficiency Requirements: Table 503.2.3(7) & NPLV: 503.2.3

Vapor Compression Chillers

What are the different types of compressors used in Chillers?

Centrifugal:

- Similar to centrifugal pump in construction
  - Vaned impeller spins in volute casing
  - Refrigerant gas enters through the axis of the impeller
  - Gas exits the impeller radially at high velocity
  - Velocity is converted to pressure as the gas collides with the volute casing
  - Typical capacity: 100 - 3,500 tons
    - » Practical limit > 200 tons due to cost
    - » Field-fabricated units up to 10,000 tons

Centrifugal - Schematic

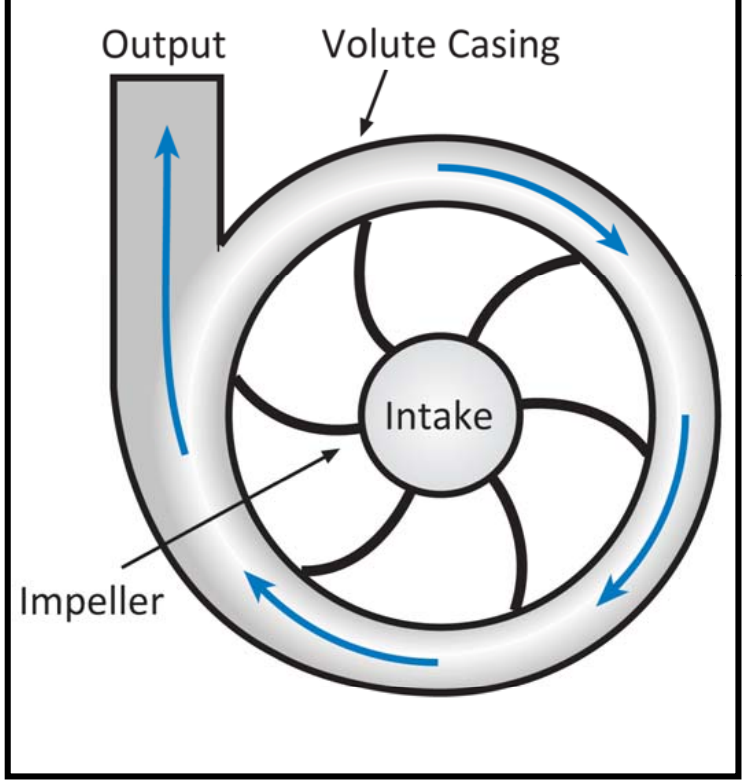

Most prevalent electrically driven Chiller type over 200 tons.

Chiller Efficiency Requirements: Table 503.2.3(7) & NPLV: 503.2.3

Absorption Chillers

How is an Absorption Chiller Different from a Vapor Compression Chiller?

Mechanical compressor is replaced by "thermal compressor"

Lithium Bromide is the typical absorber chemical used in the process

Thermal input options:

- Indirect (steam or hot water)
- Direct (gas-fired)

Requires larger heat rejection (Cooling Tower)

Two general types:

- 1-stage (single effect)
  - Less efficient (COP ≈ 0.6 - 0.7)
  - Can use lower temperature (grade) heat
  - Typical Capacity: 50 – 1700 tons (also 5 – 10T)
- 2-stage (double effect)
  - Higher efficiency (COP ≈ 1.0 - 1.2)
  - Requires high temperature (grade) heat
  - Typical Capacity: 100 - 1700 tons (also 20-100T)

Absorption System - Schematic

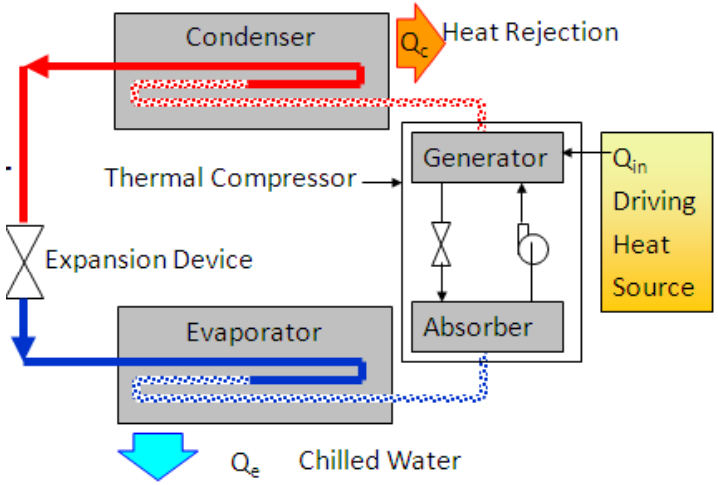

Chiller Efficiency Requirements: Table 503.2.3(7) & NPLV: 503.2.3

Absorption Chillers

How is an Absorption Chiller Different from a Vapor Compression Chiller?

Mechanical compressor is replaced by "thermal compressor"

Lithium Bromide is the typical ab chemical used in the process

Thermal input options:

- Indirect (steam or hot water)
- Direct (gas-fired)

Requires larger heat rejection (Cooling Tow

Two general types:

- 1-stage (single effect)
  - Less efficient (COP ≈ 0.6 - 0.7)
  - Can use lower temperature (grade) heat
  - Typical Capacity: 50 – 1700 tons (also 5 – 10T)
- 2-stage (double effect)
  - Higher efficiency (COP ≈ 1.0 - 1.2)
  - Requires high temperature (grade) heat
  - Typical Capacity: 100 - 1700 tons (also 20-100T)

A larger cooling tower can be used for increased water side economizer function.

Absorption System - Schematic

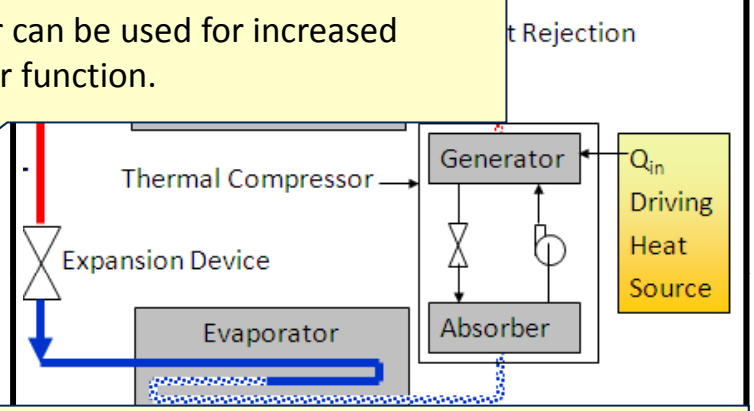

Low grade heat includes low pressure steam and medium temperature hot water. Although lower efficiency, these units can make use of site recovered heat.

High grade heat includes high pressure steam and high temperature hot water. Although higher efficiency, it is more difficult for these units to make use of site recovered heat from many sources.

Chiller Efficiency Requirements: Table 503.2.3(7) & NPLV: 503.2.3

Chiller Controls

What Methods are Used to Modulate Chiller Capacity?

For individual Chillers:

- Staging & sequencing multiple compressors
- Use of Variable Speed Drives & motors
- Hot Gas Bypass
  - Code only allows Hot Gas Bypass if equipment has multiple steps of unloading.

For Chiller plants:

- Staging of multiple Chillers
  - Consider efficiency curves for each Chiller to maximize plant efficiency for given load
- Base loaded Chillers
  - These chillers operate much of the time at or near full load to maximize full-load efficiency (recommended Path A method)
- Others
  - These chillers see varying loads
  - Maximize seasonal efficiency (recommended Path B method)

Pump Isolation: 503.4.3.5; Hot Gas Bypass: 503.4.7;

5. Heat Rejection Equipment

Slides 34 to 43

Learning Objectives

In this section you will learn about:

- Applications That Need Heat Rejection Devices;
- Types of Heat Rejection Devices;
  - Dry Cooler
  - Open Cooling Tower
  - Closed-Circuit Evaporative Cooler
- Control Requirements; and
  - Fan Speed
  - Applications in Heat Pump Loop
- Condenser Heat Recovery & Water-side Economizer.

Heat Rejection Devices

How do Air Conditioning System Chillers Reject Heat?

Cooling devices (Vapor compression & Absorption) use Condensers to reject heat

Water-cooled Condenser:

- Need condenser water loop and cooling tower (or ground)
- Chiller ratings don't include condenser water system energy (i.e., pumps and tower fans)

Air-cooled Condenser:

- Packaged or separate air-cooled condenser
- Chiller ratings must include condenser fan energy

Vapor Compression - Schematic

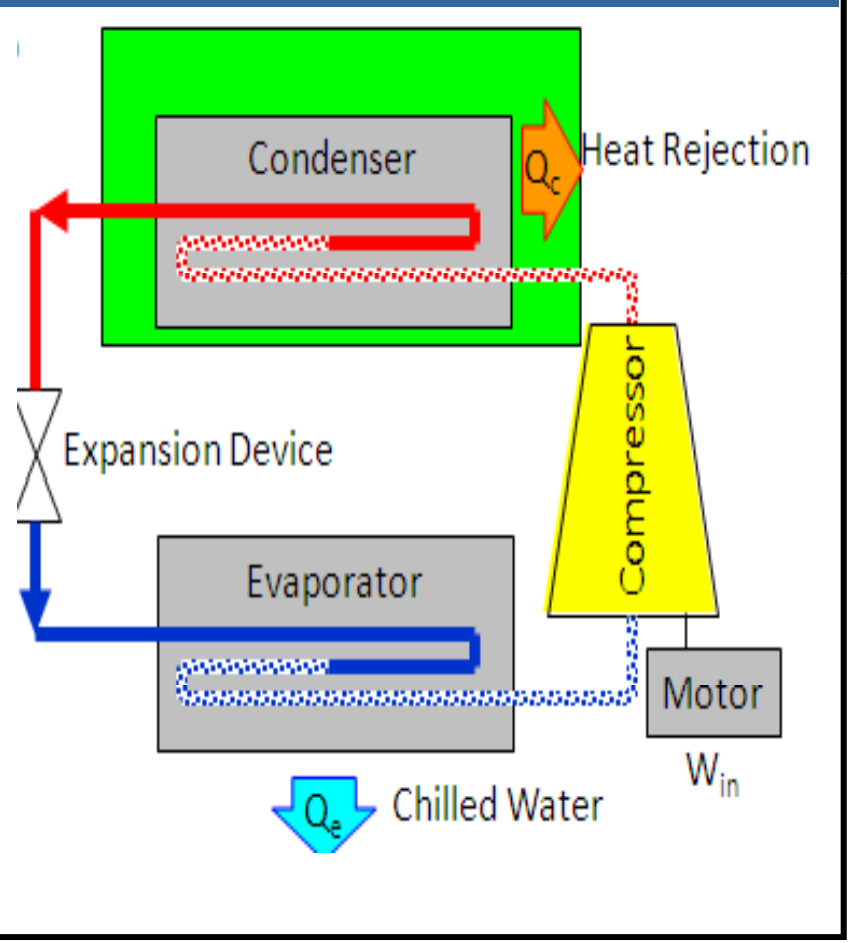

Heat Rejection Devices

How do Air Conditioning System Chillers Reject Heat?

Cooling devices (Vapor compression & Absorption) use Condensers to reject heat

Water-cooled Condenser:

- Need condenser water loop and cooling tower (or ground)
- Chiller ratings don't include condenser water system energy (i.e., pumps and tower fans)

Air-cooled Condenser:

- Packaged or separate air-cooled condenser
- Chiller ratings must include condenser fan energy

NYCECC requires air-cooled chillers without condensers to be rated with matching condensers and must then comply with the air-cooled chiller efficiency requirements. The code, however, does include separate efficiency requirements for air-cooled condensing units.

ASHRAE 90.1 provides efficiency requirement for air-cooled chillers without condensers, and allows them to be rated as such. ASHRAE also includes efficiency requirements for remote air–cooled condensers.

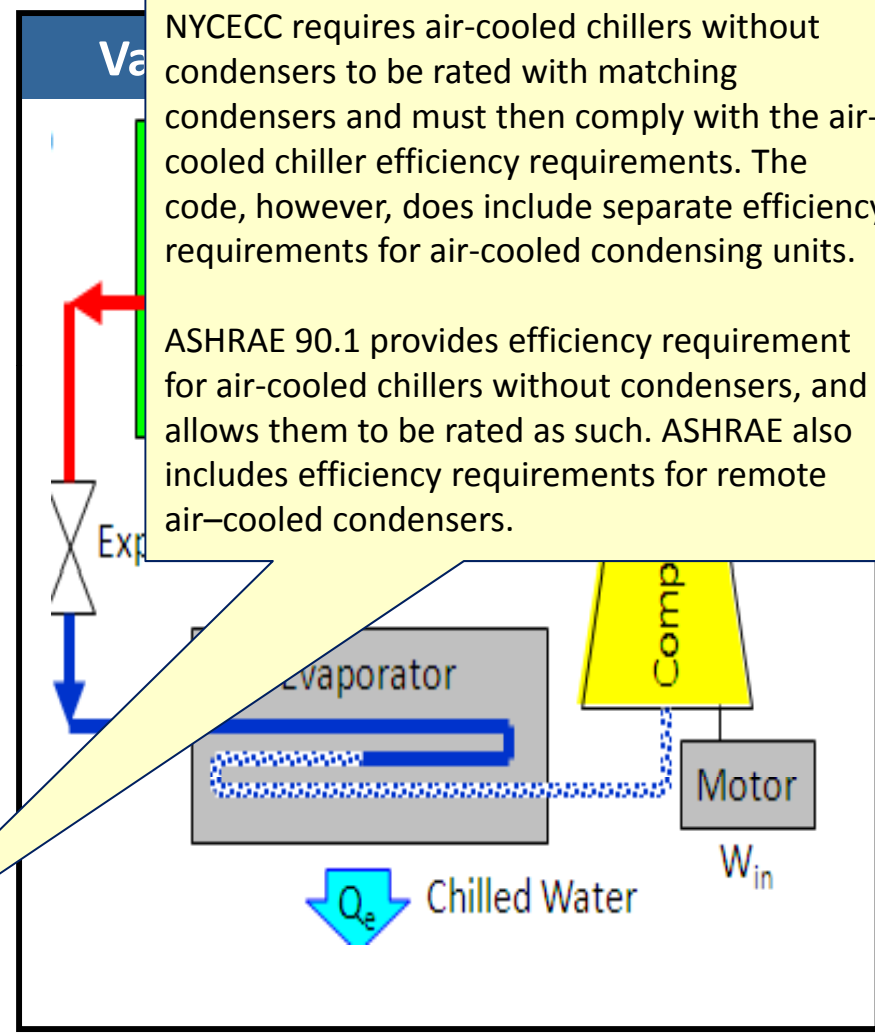

Dry Cooler

5. Heat Rejection

What type of condenser is associated with an Air-Cooled Chiller?

Features:

- Air-cooled
- Capacity and efficiency driven by ambient dry-bulb temperature
- DX systems (Condenser or Condensing Unit)

Pros:

- Simple
- Low maintenance
- Inexpensive
- No freeze issues

Cons:

- Low efficiency

Dry Cooler: Schematic

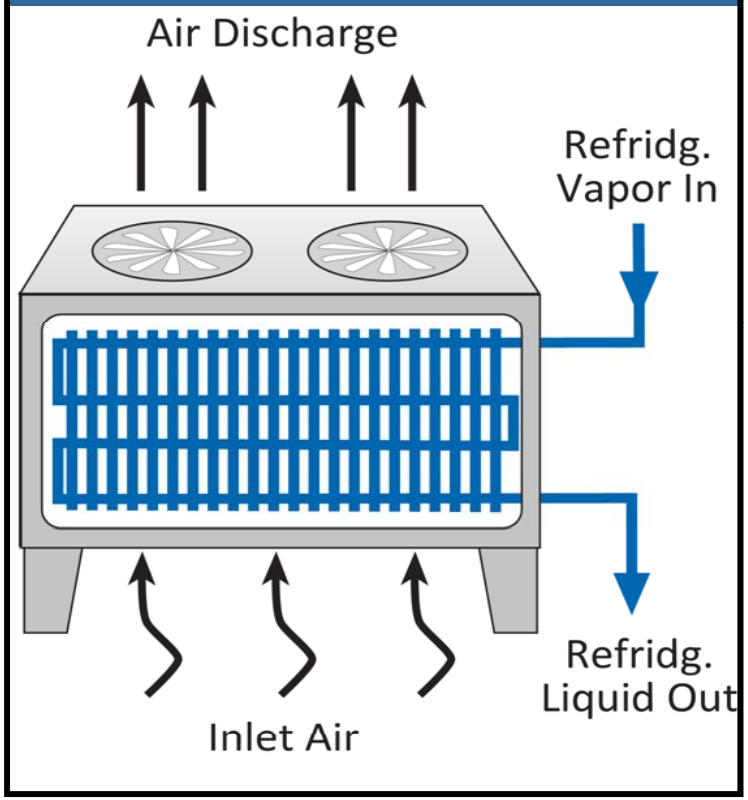

An air-cooled condenser is a type of dry cooler.

Condenser Fan Speed Control: 503.4.4;

Closed-Circuit Cooling Tower

What type of condensers are associated with Water-Cooled Chillers?

Features:

- Condenser water not in direct contact with atmosphere
- Capacity and efficiency driven by ambient wet-bulb temperature

Pros:

- More efficient than Air-cooled
- Can operate in winter as a Dry Cooler
  - Requires glycol in condenser water loop)
- Condenser water isolated from ambient
  - Contamination reduced

Cons:

- Requires make up water
- Higher maintenance than Dry Cooler
- Separate tower pump needs to be operated

Closed-Circuit Cooling Tower

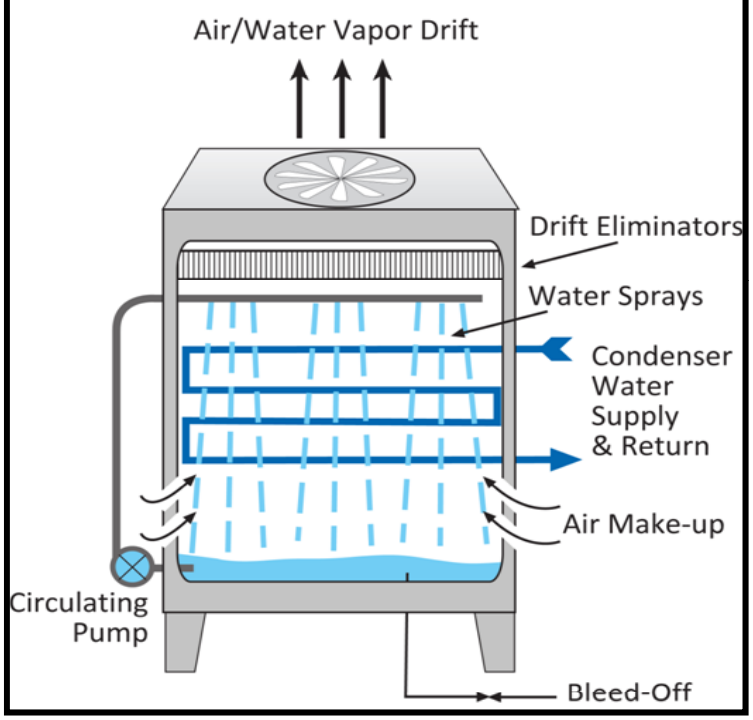

Closed-circuit cooling tower is also known as an evaporative (or evap) cooler.

Condenser Fan Speed Control: 503.4.4; Heat pump loop connection options: 503.4.3.3.2.1

Direct- (Open-) Circuit Cooling Tower

What type of condensers are associated with Water-Cooled Chillers?

Features:

- Condenser water in direct contact with ambient air
- Capacity and efficiency driven by ambient wet-bulb temperature

Pros:

- More efficient than Dry Coolers
- Typically more efficient than Evap Coolers

Cons:

- Requires make-up water
- Condenser water must be filtered to control contamination
- Higher maintenance than Dry Cooler or Evaporative Cooler

Open-Circuit Cooling Tower

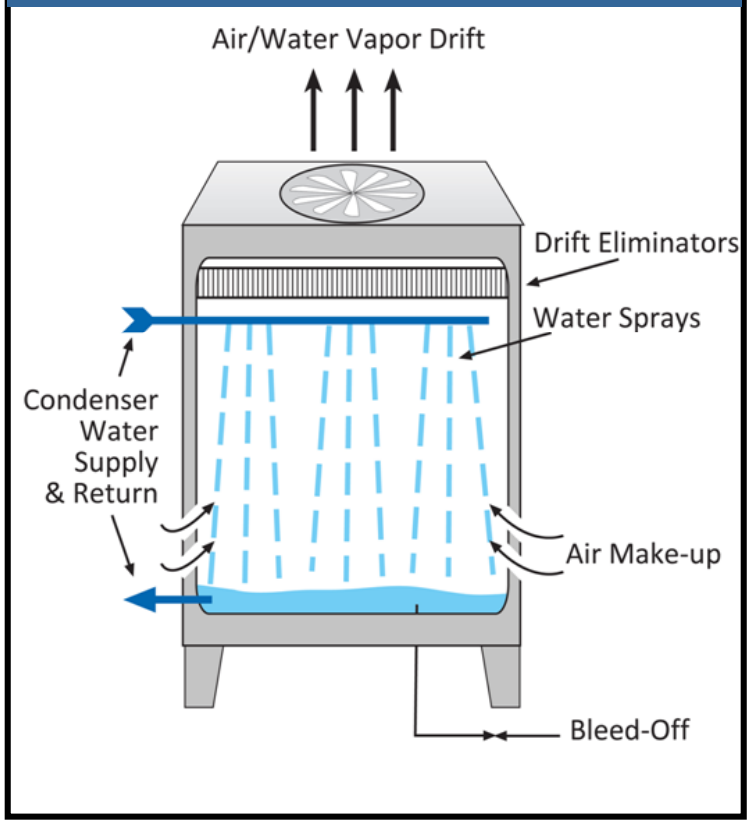

Condenser Fan Speed Control: 503.4.4; Heat pump loop connection options: 503.4.3.3.2.1

Heat Rejection Performance

What applications of heat rejection devices are governed by Code?

Condensing Units efficiency:

- Air-cooled
- Water and evaporatively cooled

Heat rejection fan speed control
Hydronic (water loop) HP systems

Condenser Heat Recovery:

- Required for some facilities with water-cooling condensers

Water Economizer:

- Tower(s) create cooling water directly
- Exemption for air economizer if performance requirements are met

Fan speed control must be inspected & verified for proper operation as part of Progress Inspections

Tables 503.2.3 6 & 503.2.3 7 ; Water Economizer: 503.4.1 Exception; Condenser Heat Recovery: 503.4.6; Heat Rejection Fans: 503.4.4

Heat Rejection Performance

? How does heat rejection equipment control capacity?

Performance and capacity are based on:

- Dry Coolers: dry-bulb temperature
- Evap or Open Towers: ambient wet-bulb temperature

Capacity is controlled by fan speed
Fan Control Options:

- Cycling/Staging (On-Off)
- Two-Speed Fans
- Variable-Speed Fans
- Code requirements for fans greater than 7.5 HP
  - Capacity to operate at 2/3 speed or less
  - Controls shall automatically adjust fan speed based on …
    - » Towers: temperature of leaving fluid, or
    - » Condensing Units: condensing temperature & pressure
  - Exception for fans which are included in the rated efficiency of Condensing Units and Chillers

Fan controls: 503.4.4;

Heat Rejection for Hydronic Heat-Pumps

What cooling tower controls are required on Hydronic Heat-Pump Systems?

Hydronic Heat-Pump Systems:

- **Water-loop temperature control deadband required.**
- **Heat loss through tower shall be controlled as follows:**
  - Closed-circuit tower with direct connection to HP loop
    - An automatic valve shall bypass water flow around the tower, or
    - Low-leakage positive closure dampers shall prevent airflow through the tower
  - Open-circuit tower with direct connection to HP loop
    - An automatic valve shall bypass water flow around the tower
  - Open- or closed-circuit tower with a heat exchanger between HP loop and tower
    - Tower water-loop pump shall shut down

Tower water temperature control, bypass valve control, tower dampers, and tower pump controls need to be verified and operation tested.

Condenser Types & Attachment / control requirements: 503.4.3.3.2.1;

Heat Rejection for Hydronic Heat-Pumps

What cooling tower controls are required on Hydronic Heat-Pump Systems?

Hydronic Heat-Pump Systems:

- **Water-loop temperature control deadband required.**
- **Heat loss through tower shall be controlled as follows:**
  - Closed-circuit tower with direct connection to HP loop
    - An automatic valve shall bypass water flow around the tower, or
    - Low-leakage positive closure dampers shall prevent airflow through the tower
  - Open-circuit tower with direct connection to HP loop
    - An automatic valve shall bypass water flow around the tower
  - Open- or closed-circuit tower with a heat exchanger between HP loop and tower
    - Tower water-loop pump shall shut down

Hydronic Heat Pumps are also referred to as Water-Loop Heat Pumps.

Tower water temperature control, bypass valve control, tower dampers, and tower pump controls need to be verified and operation tested.

Condenser Types & Attachment / control requirements: 503.4.3.3.2.1;

Condenser Heat Recovery

Can we use some of this rejected heat for something instead of rejecting it?

Supplementing Service Water Heating:

- **Required when heating or reheating service hot water when:**
  - Facility operates 24 / 7
  - Cooling capacity of water-cooled systems exceeds 6,000,000 Btu/h 500 tons of heat rejection

  AND

  - Design service water heating load exceeds 1,000,000 Btu/h (e.g., Hospitals)

- **Required capacity is the smaller of**:
  - 60% of peak heat rejection load at design conditions

  OR

  - Preheating to 85°F for peak service hot water draw

Water Economizer

What is a water (Water-Side) economizer?

Water Economizer:

- Use condenser water directly to meet cooling loads
- Integrated vs. non-integrated
- Typically used when cooling during cold weather AND air economizer impractical
- Does not introduce air-side contaminants or excessively dry winter outside air, as air economizers may do.

- Code Requirement:
  - No mandatory requirement
  - Alternative to air Economizer IF capable of meeting 100 % of the <u>expected system cooling load</u> at outside air temperatures of 50°F (10°C) dry bulb/45°F (7°C) wet bulb and below.

Water-side Economizer

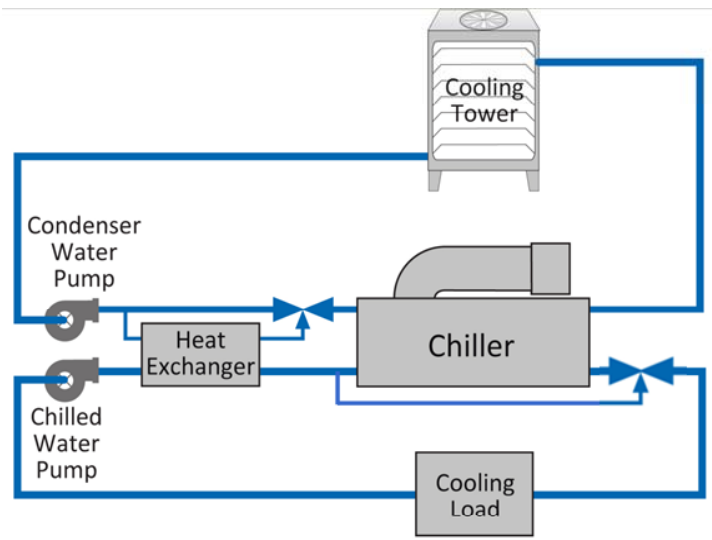

Water-side Economizer must be inspected & verified for proper operation as part of Progress Inspections

Water-side Economizer: 503.4.1 – Exception 1

6. Hydronic Systems & Controls

Slides 44 to 50

Learning Objectives

In this section you will learn about:

- Schematics, pros, cons and requirements for Two-pipe systems, Three-pipe systems, Hydronic Heat Pump loop, Primary / Secondary Loops;
- Part-load control requirements including control valve types, pump speed controls and temperature based reset controls; and
- Pump control requirements.

Hydronic Systems

What is a two-pipe hydronic system?

Two-pipe Changeover Systems:

- One coil is used for heating or cooling (supply pipe + return pipe) at terminal device
- Changeover required between chilled water and hot water
  - Less expensive than four pipe, but
  - Less flexible
    - All zones are provided EITHER heating OR cooling
- **Code Requirements:**
  - Deadband of 15°F between heating and cooling modes based on OA temperature
  - 4-hour delay before changing modes

    AND
  - Difference between changeover temperatures must be no more than 30°F

    Intent: To avoid heating previously chilled water or cooling previously heated water

Two-pipe Direct Return

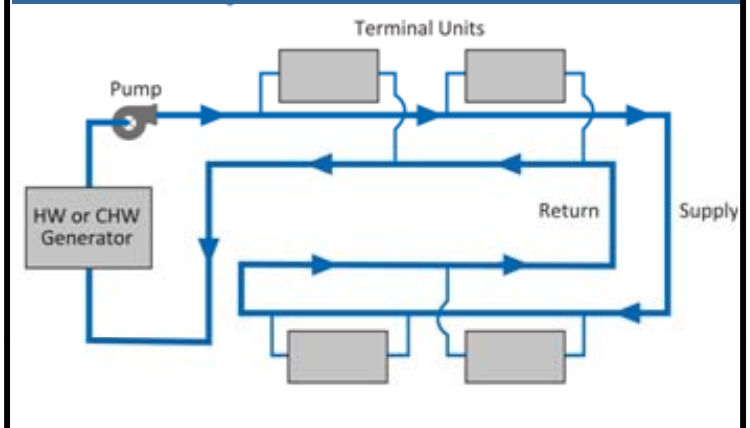

Two-pipe Reverse Return

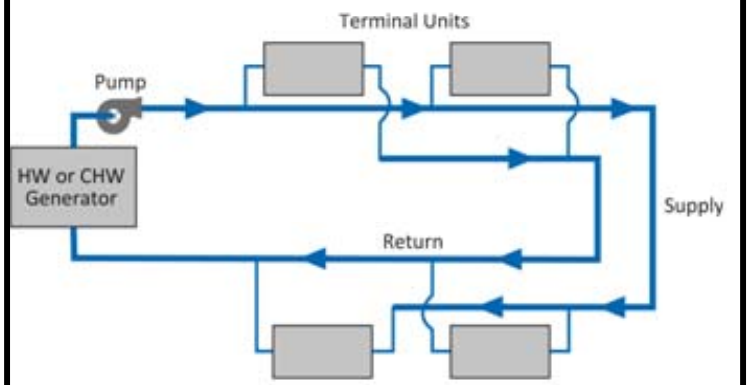

Two-pipe: 503.4.3.2

What is a two-pipe hydronic system?

Two-pipe Changeover Systems:

- One coil is used for heating or cooling (supply pipe + return pipe) at terminal device
- Changeover required between chilled water and hot water
  - Less expensive than four pipe, but
  - Less flexible
    - » All zones are provided EITHER heating OR cooling
- **Code Requirements:**
  - Deadband of 15°F between heating and cooling modes based on OA temperature
  - 4-hour delay before changing modes

    AND
  - Difference between changeover temperatures must be no more than 30°F

    Intent: To avoid heating previously chilled water or cooling previously heated water

These systems also may not provide the same level of comfort during the swing seasons when heating and cooling maybe be required in different parts of a building or at different times of the day.

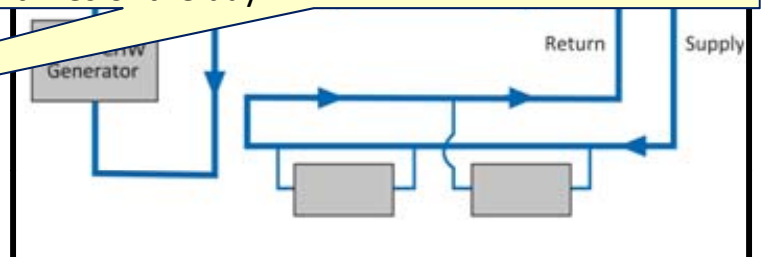

Two-pipe Reverse Return

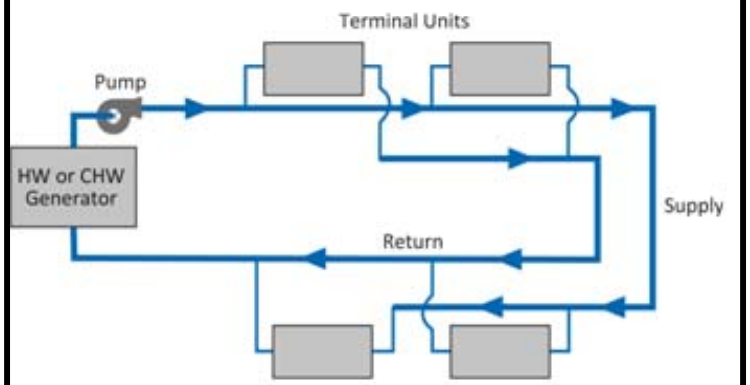

Hydronic Systems

? What is a three-pipe hydronic system?

Three–pipe Systems:

- HW (Hot Water) & CHW (Chilled Water) supply available any time to each terminal
- Common (mixed) return

- **Pros:**
  - Less expensive than Four-pipe
  - More flexible than Two-pipe

- **Cons:**
  - Simultaneous heating & cooling due to mixed return

SPECIFICALLY PROHIBITED BY CODE

Three-pipe System

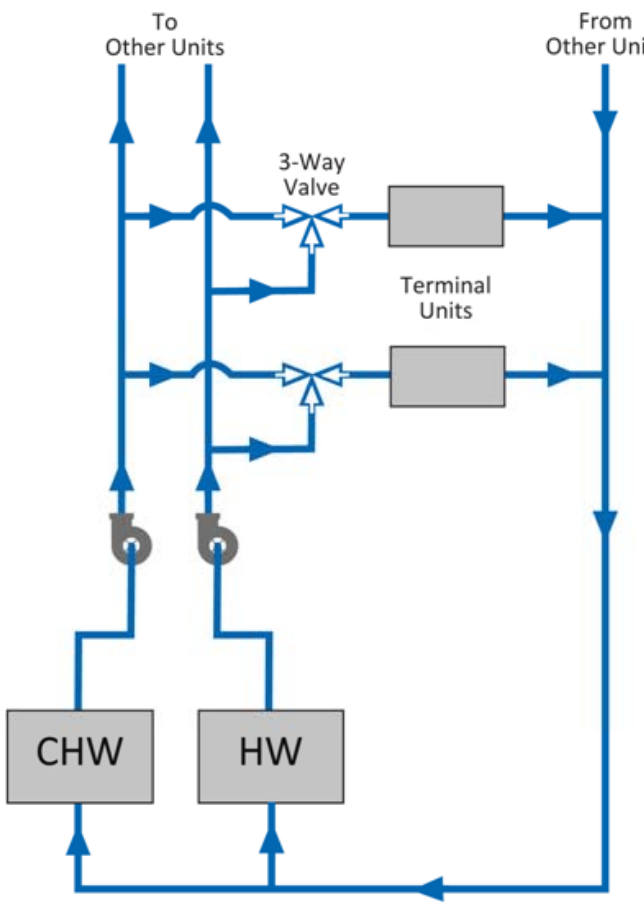

Three-pipe: 503.4.3.1

What is a water-source heat-pump loop?

Water Source Heat Pump Loop:

- Loop circulates water between each water-to-air Water-Source Heat Pump (WSHP) on the system
- WSHPs extract heat (heating mode) or reject heat (cooling mode) to the loop
- Water Heater and Heat Rejection Device maintain the loop within temperature limits
- **Code Requirements:**
  - Two-position (open-closed) valves for each heat pump on a system with a circulating pump > 10HP
  - Deadband of 20°F between maximum and minimum loop temperature
    - » Exception for controls that "can determine the most efficient operating temperature based on real-time conditions of demand and capacity…"

Water-Source Heat-Pump Loop

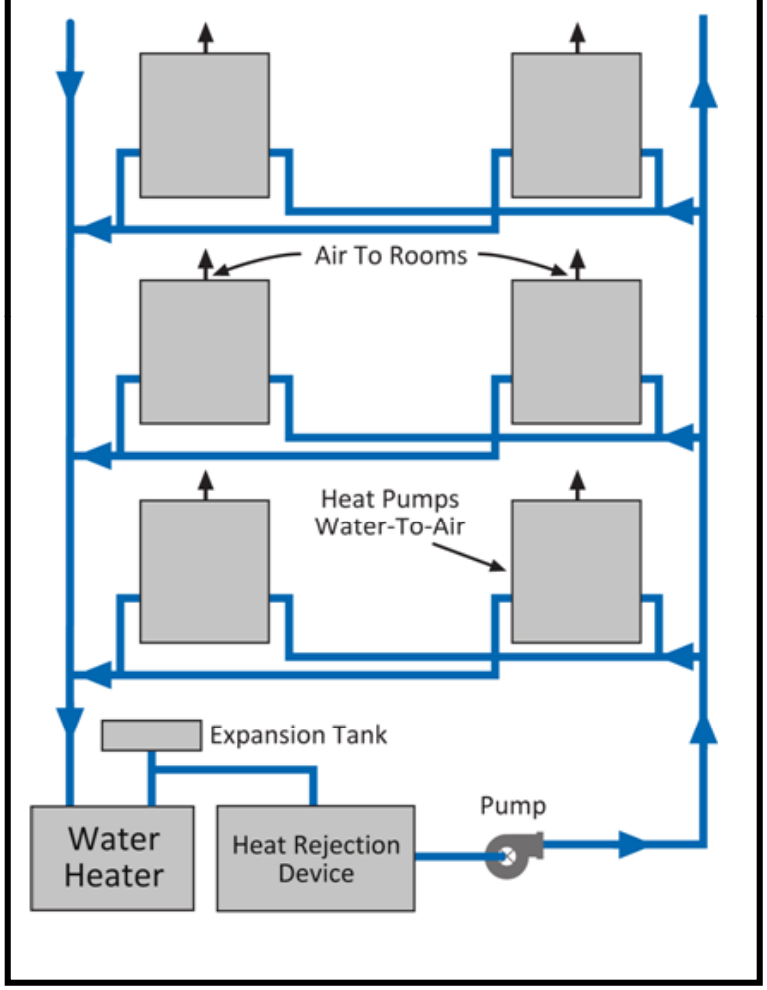

What is a water-source heat-pump loop?

Water Source Heat Pump Loop:

- Loop circulates water between each water-to-air Water-Source Heat Pump (WSHP) on the system
- WSHPs extract heat (heating mode) or reject heat (cooling mode) to the loop
- Water Heater and Heat Rejection Device maintain the loop within temperature limits
- **Code Requirements:**
  - Two-position (open-closed) valves for each heat pump on a system with a circulating pump > 10HP
  - Deadband of 20°F between maximum and minimum loop temperature
    - » Exception for controls that "can determine the most efficient operating temperature based on real-time conditions of demand and capacity…"

Water-Source Heat-Pump Loop

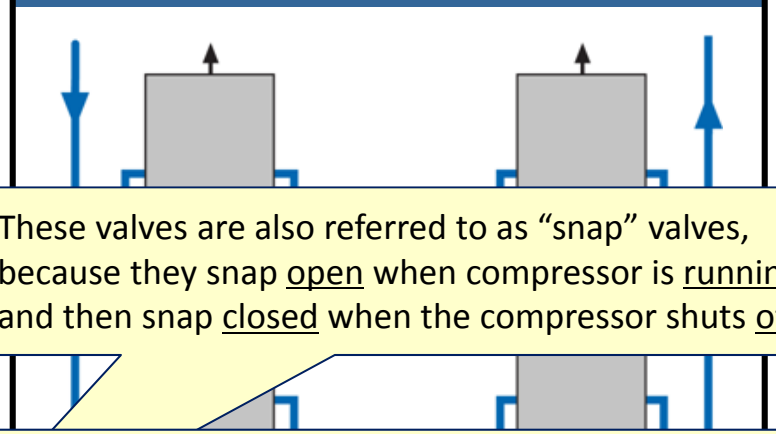

These valves are also referred to as "snap" valves, because they snap open when compressor is running and then snap closed when the compressor shuts off.

Typical temperatures are 85°F maximum and 65°F mininum. A broader deadband means less energy consumed for heat rejection and water heating, but the WSHPs may operate less efficiently.

A lower maximum temperature means more efficient WSHPs in cooling mode, but more energy consumed by the heat rejection device.

A higher minimum temperature means more efficient WSHPs in heating mode, but more energy consumed by the water heater.

Hydronic Systems

What are heating and cooling plant requirements?

Chiller and Boiler Plants:

- Part-Load Control for plants > 300,000 Btu/h design output capacity
  - Reset supply water temp. by 25% of design temp. difference based on return water OR outside air temperature.
  - Reduce pump flow by 50% automatically using:
    - » Adjustable speed pumps

      OR
    - » Multi-staged pumps that reduce total pump horsepower by at least 50%
- Multiple boilers, and chillers in parallel
  - Automatic controls that reduce plant flow when a chiller/boiler turns off

Boiler Plant Specific Requirements:

- Multiple-packaged boiler plants must have controls that automatically sequence the boiler operation; and
- Single boiler plants > 500,000 Btu/h design input capacity must have a multi-staged or modulating burner

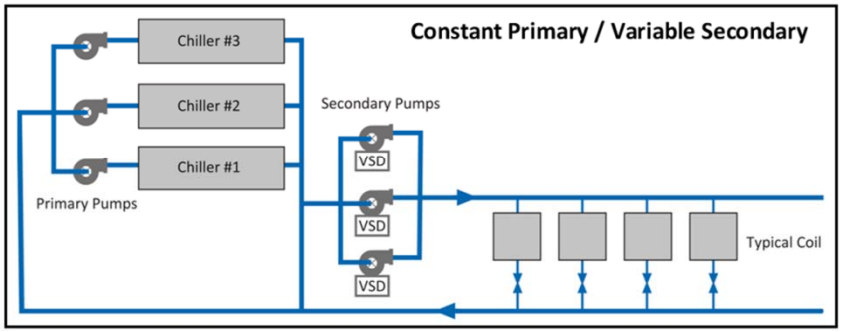

Isolation Valves, two-position valves, temperature reset sequences, pump control strategy must be shown on drawings. A minimum sample of 20% must be inspected/tested.

Pump Isolation: 503.4.3.5; Part load controls: 503.4.3.4

Hydronic Systems

What are heating and cooling plant requirements?

Chiller and Boiler Plants:

- Part-Load Control for plants > 300,000 Btu/h design output capacity
  - Reset supply water temp. by 25% of design temp. difference based on return water OR outside air temperature.
  - Reduce pump flow by 50% automatically using:
    - » Adjustable speed pumps

      OR
    - » Multi-staged pumps that reduce total pump horsepower by at least 50%
- Multiple boilers, and chillers in parallel
  - Automatic controls that reduce plant flow when a chiller/boiler turns off

Boiler Plant Specific Requirements:

- Multiple-packaged boiler plants must have controls that automatically sequence the boiler operation; and
- Single boiler plants > 500,000 Btu/h design input capacity must have a multi-staged or modulating burner

While typical for boiler plants, this is not often done for chiller plants. For typical chiller systems this would represent about 2.5 to 3F of reset.

Most boiler plant controls have reset based on OA from 180F down to 150F. This is typically much more than the code requirement even for systems with as much as a 40F design temperature difference … which is larger than most typical designs.

Lower HW (higher CHW) supply water temperatures reduce conduction losses through distribution pipes and can increase boiler (chiller) equipment plant operating efficiency, but can result in increased pump flow.

Chillers piped in series to achieve increased temperature difference are considered a single chiller.

Pump Isolation: 503.4.3.5; Part load controls: 503.4.3.4

Hydronic Systems

How is flow controlled by pumps in a Hydronic Loop?

Pump Speed Controls:

- **Constant Speed Pump Motor**
  - Provide constant flow at constant input power
  - Multiple pumps in parallel can be staged on/off to achieve variable flow control
- **2-Speed Pumps**
  - Provide constant flow at each speed
  - Pump speed changes to achieve variable flow control - based on pressure ranges or flow measurements
- **Variable Speed Pumps**
  - Pump speed continuously modulates to maintain desired static pressure set point
- **Static Pressure**
  - Differential static pressure is set based on Testing, Adjusting & Balancing (TAB) to ensure flow at "remote" terminal devices
  - Static pressure set-point can be reduced based on zone valve position with a DDC systems, but this is not required by Code.

Pump Laws/Formulas

$$\text{Pump Speed} \propto \text{Water Flow}$$

$$\text{Water Pressure} \propto (\text{Water Flow})^2$$

$$\text{Water Power} \propto (\text{Water Flow})^3$$

$$\text{Pump Power} \propto \frac{\text{Flow x Pressure}}{\text{Pump Efficiency}}$$

Pump VFD

Hydronic Systems

How is flow controlled by pumps in a Hydronic Loop?

Pump Speed Controls:

- **Constant Speed Pump Motor**
  - Provide constant flow at constant input power
  - Multiple pumps in parallel can be staged on/off to achieve variable flow control
- **2-Speed Pumps**
  - Provide constant flow at each speed
  - Pump speed changes to achieve variable flow control - based on pressure ranges or flow measurements
- **Variable Speed Pumps**
  - Pump speed continuously modulates to maintain desired static pressure set point
- **Static Pressure**
  - Differential static pressure is set based on Testing, Adjusting & Balancing (TAB) to ensure flow at "remote" terminal devices
  - Static pressure set-point can be reduced based on zone valve position with a DDC systems, but this is not required by Code.

Pump Laws/Formulas

$$\text{Pump Speed} \propto \text{Water Flow}$$

$$\text{Water Pressure} \propto (\text{Water Flow})^2$$

$$\text{Water Power} \propto (\text{Water Flow})^3$$

$$\text{Pump Power} \propto \frac{\text{Flow x Pressure}}{\text{Pump Efficiency}}$$

Devices are remote in terms of pressure drop between pump and device. It is possible that devices that are physically closer to the pump have higher pressure drop (i.e., are more hydrostatically remote) than devices located farther from the pumps.

Hydronic System Controls

How is flow controlled at Terminal Units in a Hydronic Loop?

Loop Flow Controls:

- **2-Way Valves at Terminal Units**
  - 2-way valves reduce flow to the terminal device, *reducing* coil capacity/output
  - System pressure increases with decreasing flow allowing system pumps to reduce flow/speed
- **3-Way Valves at Terminal Units**
  - 3-way valves reduce flow by bypassing unneeded design flow around terminal device
  - Overall system flow remains constant at design flow
- **2-Position Valves**
  - Valves open and close providing 100% of design flow as needed
  - System pressure increases as valves close, allowing system pumps to reduce flow/speed

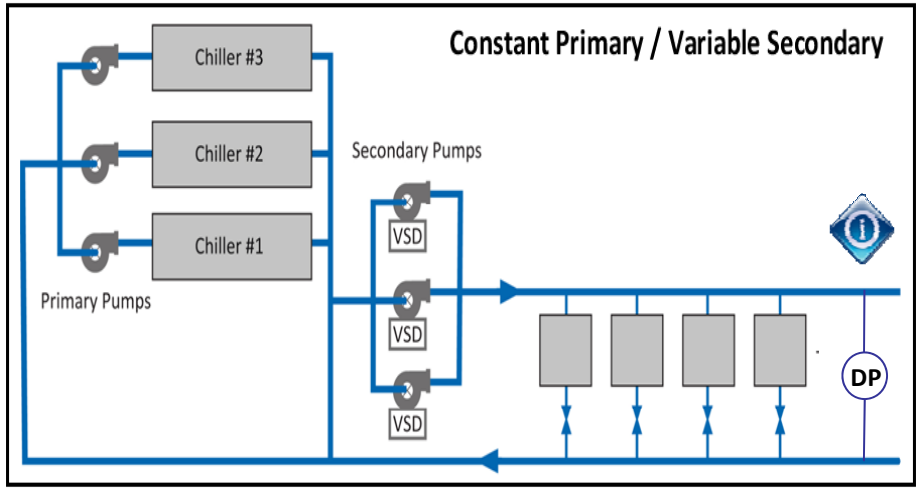

VFD & pump control strategy, including isolation valves, terminal device valves, temperature reset sequences, pressure sensors, must be shown on drawings.

A minimum 20% sample of pump speed control devices must be inspected/tested.

Hydronic System Controls

How is flow controlled at Terminal Units in a Hydronic Loop?

Loop Flow Controls:

- **2-Way Valves at Terminal Units**
  - 2-way valves reduce flow to the terminal device, *reducing* coil capacity/output
  - System pressure increases with decreasing flow allowing system pumps to reduce flow/speed
- **3-Way Valves at Terminal Units**
  - 3-way valves reduce flow by bypassing unneeded design flow around terminal device
  - Overall system flow remains constant at design flow
- **2-Position Valves**
  - Valves open and close providing 100% of design flow as needed
  - System pressure increases as valves close, allowing system pumps to reduce flow/speed

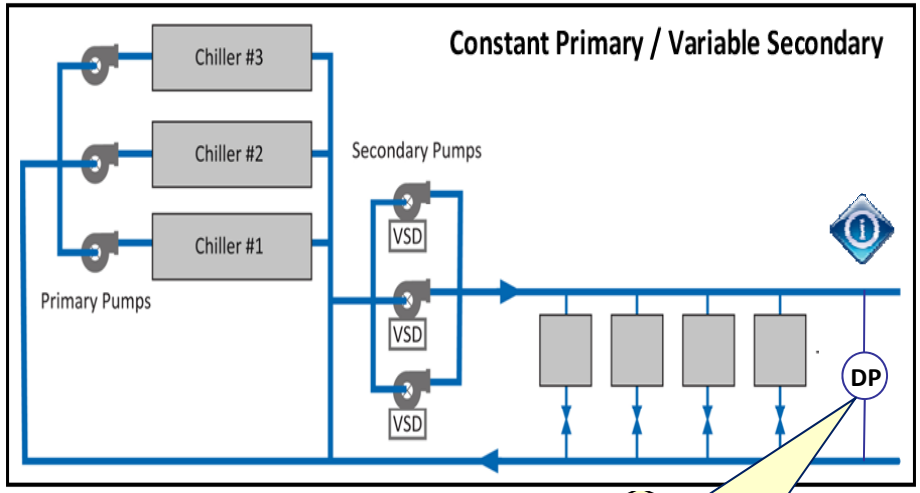

VFD & pump control strate ding
isolation valves, termin alves.
d.

A Differential Pressure (DP) sensor is required to set and control the system pressure for flow control. As valves close pressure increases and pumps stage on/off or pump speed is reduced.

Often a 3-way valve is placed at remote terminal devices to reduce system response time changing space demands … hot/chilled water is maintained throughout the system.

7. Service Hot Water

Slides 51 to 55

Sub-Module Overview

In this section you will learn about:

- Performance Requirements;
- Control Requirements;
  - Temperature
  - Heat Traps
  - Hot Water System Controls
- Pipe Insulation; and
- Swimming Pools.

Performance Efficiency Requirements

7. Service Water Heating

Determine performance requirement for Service Hot Water Heater

Refer to Table 504.2

- Multiple fuels, equipment types, equations & rating standards

Electric:

- Resistance Water Heaters
- Heat Pump Water Heaters

Natural Gas:

- Storage Water Heaters
- Instantaneous Water Heaters
- Boilers

Oil:

- Storage Water Heaters
- Instantaneous Water Heaters
- Boilers

Dual Fuel: Gas & Oil:

- Boilers

Q	Input Rate	Btu/h
SL	Standby Loss	Btu/h
V	Volume	Gallons
EF	Energy Factor	%
Et	Efficiency (Thermal)	%
COP	Coefficient Of Performance	-

Standby Loss (SL) and Energy Factors (EF) are provided by the manufacturer. The NYC ECC (Table 504.2) and ASHRAE 90.1 (Table 7.8) include formulas to calculate the efficiency requirements. These formulas vary by type of equipment, but are based the rated volume of the tank (V) in gallons, and in the case of gas and oil fired heaters are also based on the nameplate input rate input (Q) in Btu/h.

Note also that gas and oil fired equipment includes requirements for thermal efficiency AND standby loss.

For example:

Electric

≤ 12kW, ≥ 20 gal: $EF = 0.93 - 0.00132 \times V$

Storage Water heater, Gas

> 75,000Btu/h, < 4,000 (Btu/h)/gal $SL = Q/800 + 110 \times \sqrt{V}$

Controls

What are mandatory control requirements for Service Hot Water Systems?

Temperature Controls:

- Allow 110°F for dwelling units
- Allow 90°F for other occupancies
- Public restrooms, maximum allowed temperature is 110°F

Heat Traps:

- **Non-Circulating Systems**
  - Built in at equipment

  OR
  - Built into supply & discharge piping loops around equipment

System Controls:

- **Circulating Systems**
  - Automatic or manual shut-off for circulating pump during periods when system not in use

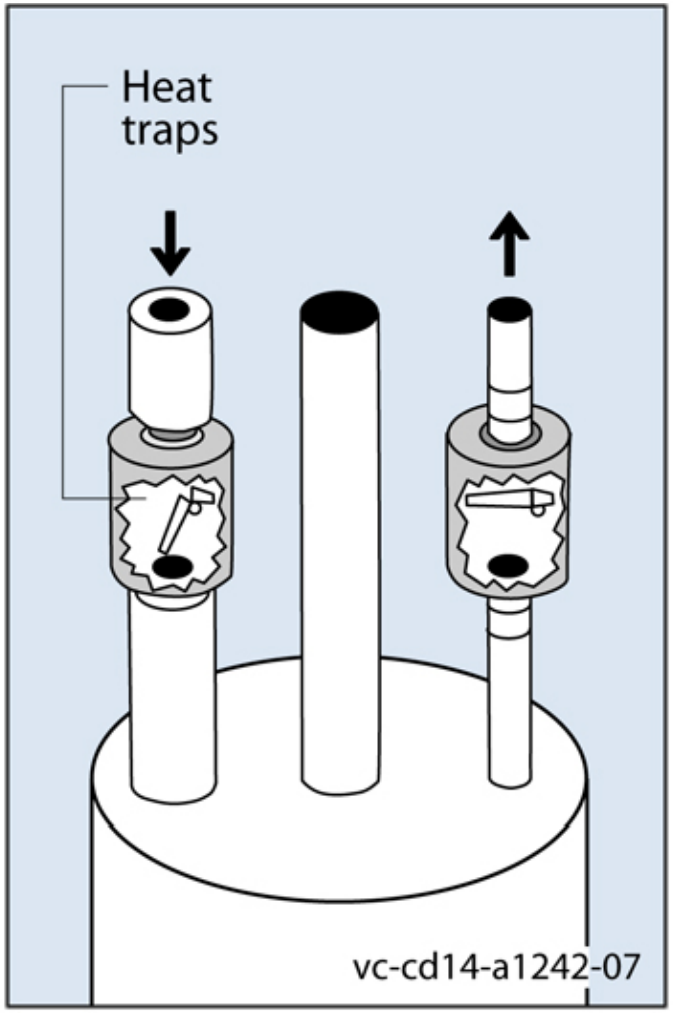

Temperature Controls: 504.3; Heat Traps: Table 504.4; System Controls: 504.6

Insulation Requirements

Which components need to be insulated in Service Hot Water Systems?

Pipe Insulation:

- Circulating systems:
  - 1 in. thickness
- Non-circulating systems:
  - ½ in. thickness for first 8 feet if there are no integral heat traps with heater

(Insulation thickness based on conductivity 0.27 Btu-in. /h-ft^2-°F or less)

Unfired Storage Tanks Insulation:

- R-12.5 or higher

Swimming Pool Cover:

- All heated pools
  - Vapor-retardant cover installed at or on water surface
- Pools heated to over 90°F
  - Cover shall be R-12 or higher

Pipe Insulation: 504.5; Pool Covers: 504.7.3

Swimming Pools

What are requirements in commercial buildings for swimming pools?

Pool:

- **Heater Performance**
  - Gas- or oil-fired heaters: 78% Et
  - Heat Pump heaters: 4.0 COP
  - Continuously burning pilots prohibited
- **Heater and Pump Controls**
  - Heater to have readily accessible on-off control independent of thermostat setting
  - Automatic time switches must be installed on heater and pumps
    - Exceptions:
      - Public health standards require 24-hour pump operation
      - Pumps required to operate for solar or site-recovered heat

Swimming Pools: 504.7;

Building HVAC and Service Hot Water (SHW)

Slides 56 to 83

8. Submissions & Inspections

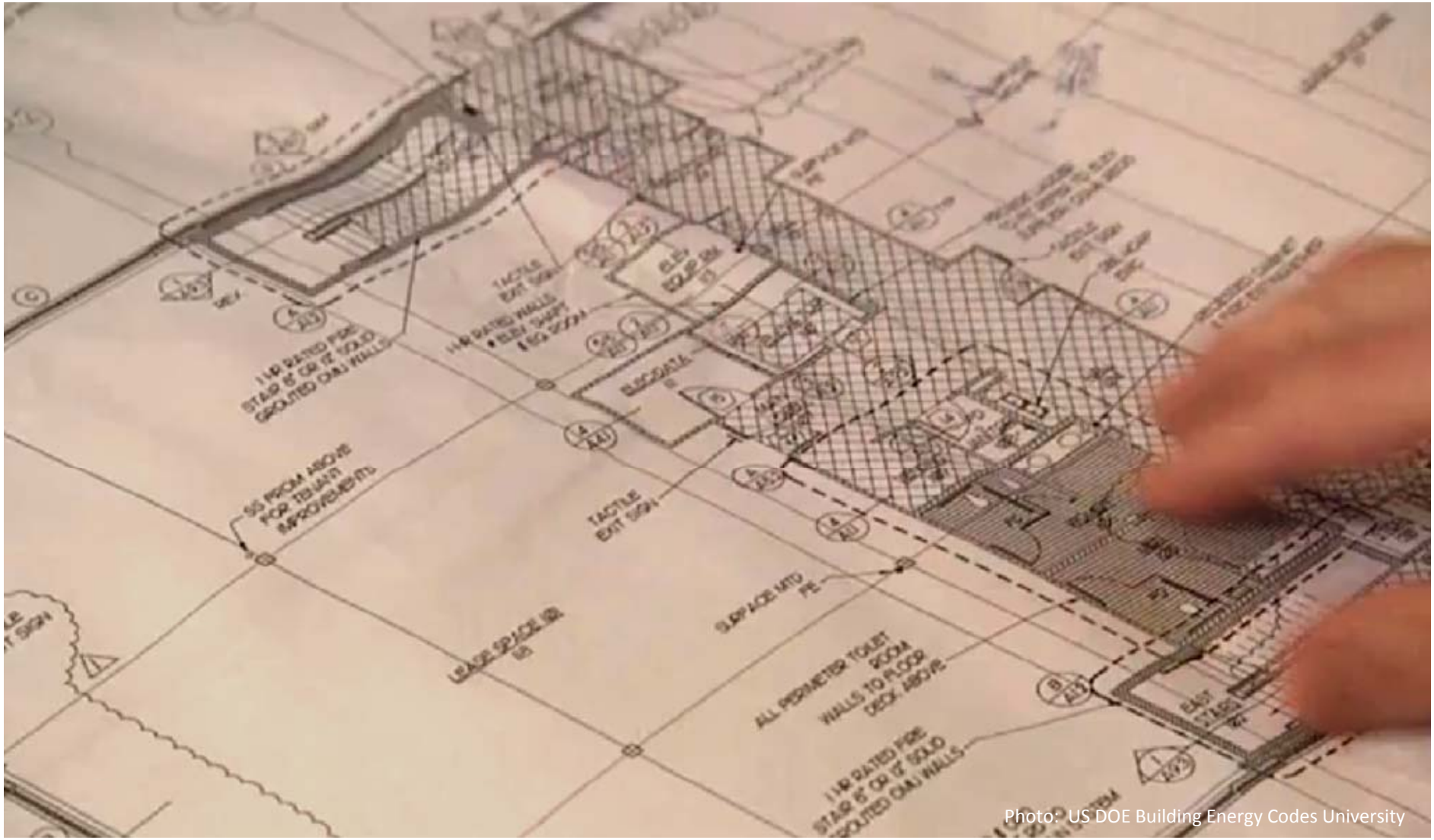

Photo: US DOE Building Energy Codes University

8. Submissions & Inspections

Learning Objectives

In this section you will learn about:

- HVAC- and SHW-related requirements for NYCECC Submissions, including:
  - Energy Analysis, and
  - Supporting Documentation
- Applicable Progress Inspections associated with HVAC and SHW Systems.

NYCECC and Applications

What are the application requirements related to the NYCECC?

Per 1 RCNY §5000-01:

- A Professional Statement
- An Owner Statement
- An Energy Analysis
- Supporting Documentation, including the requirement for and description of Progress Inspections in drawings

This HVAC Module addresses only Energy Analysis, Supporting Documentation, and Progress Inspection issues. A full overview of the required submission documents, including Professional and Owner Statements, is included under the NYCECC Administrative Overview module in this series.

Energy Analysis

? What types of Energy Analysis are allowed?

Per 1 RCNY §5000-01:

- Tabular Analysis
- COMcheck software
- Energy Modeling
- Alternative Formats

Option 1: Tabular Analysis

- The Tabular Analysis compares proposed values of each ECC-regulated item in the scope of work with the respective prescriptive values required by the Code.
  - Applicable to New Buildings, Additions, or Alterations
  - Demonstrates Prescriptive Compliance
  - Can be used with either NYCECC or ASHRAE 90.1

Sample Tabular Analysis - 1

Example of Tabular Analysis for Commercial Alterations / Renovations

NYCECC Citation	Provision	Item Description	Proposed Design Value	Code Prescriptive Value	Supporting Documentation
		Building Mechanical Systems			
503.2	Mandatory Provisions				
503.2.1	Calculation of heating and cooling loads	Minimum and maximum temperatures for interior design load calculations	N/A	ASHRAE/ACCA 183 ASHRAE HVAC Systems and Equipment Handbook, chapter 3 Energy Code	Signed and Sealed statement from Engineer certifying compliance with energy code
503.2.2	Equipment and system sizing	Heating and cooling equipment shall not exceed calculated loads		Heating and cooling equipment shall not exceed calculated loads	Signed and Sealed statement from Engineer certifying compliance with energy code
503.2.3	HVAC Equipment Performance Requirements	HVAC Equipment Performance Requirements			
Table 503.2.3(1)	Unitary air conditioners, condensing units, electrically operated, minimum efficiency requirements	Split System 5 ton air cooled AC unit, AC-1	12.0 EER	11.2 EER	Split System AC units schedule, drawing M-300
Table 503.2.3(1)	Unitary air conditioners, condensing units, electrically operated, minimum efficiency requirements	Through the Wall AC unit, 1 ton, AC-2	12.5 SEER	12.0 SEER	Through the wall AC units schedule, drawing M-300
Table 503.2.3(2)	Unitary and applied heat pumps, electrically operated, minimum efficiency requirements	3 ton air cooled heat pump, single package, HP-1	13.2 SEER	13.0 SEER	AC units schedule, drawing M-300
Table 503.2.3(3)	Packaged Terminal Air Conditioners and Packaged Terminal Heat Pumps	PTAC (Cooling Mode) Replacement, 12,000 BTU, PTAC-1	9.8 EER	10.9-(12000/1000) EER=8.344 EER	PTAC AC units schedule, drawing M-301
Table 503.2.3(4)	Warm air furnaces and combination warm air furnaces/air-conditioning units, warm air duct furnaces and unit heaters	N/A	N/A	N/A	N/A
Table 503.2.3(5)	Boilers, Gas and Oil Fired	Oil fired, 250,000 Btu input, B-1	82% AFUE	80% AFUE	Boiler schedule, drawing M-301
Table 503.2.3(6)	Condensing Units, Electrically operated	N/A	N/A	Table 503.2.3(6)	N/A

Sample Tabular Analysis - 1

8. Submissions & Inspections — Example of Tabular Analysis for Commercial Alterations / Renovations

NYCECC Citation	Provision	Item Description	Proposed Design Value	Code Prescriptive Value	Supporting Documentation
		Building Mechanical S			
503.2	Mandatory Provisions				
503.2.1	Calculation of heating and cooling loads	Minimum and maximum temperatures for interior design load calculations		E HVAC y Code	Signed and Sealed statement from Engineer certifying compliance with energy code
503.2.2	Equipment and system sizing	Heating and cooling equipr shall not exceed calculated loads		nent loads	Signed and Sealed statement from Engineer certifying compliance with energy code
503.2.3	HVAC Equipment Performance Requirements	HVAC Equipment Performance Requirements			
Table 503.2.3(1)	Unitary air conditioners, condensing units, electrically operated, minimum efficiency requirements	Split System 5 ton air cooled AC unit, AC-1	12.0 EER	11.2 EER	Split System AC units schedule, drawing M-300
Table 503.2.3(1)	Unitary air conditioners, condensing units, electrically operated, minimum efficiency requirements	Through the Wall AC unit, 1 ton, AC-2	12.5 SEER	12.0 SEER	Through the wall AC units schedule, drawing M-300
Table 503.2.3(2)	Unitary and applied heat pumps, electrically operated, minimum efficiency requirements	3 ton air cooled heat pump, single package, HP-1	13.2 SEER	13.0 SEER	AC units schedule, drawing M-300
Table 503.2.3(3)	Packaged Terminal Air Conditioners and Packaged Terminal Heat Pumps	PTAC (Cooling Mode) Replacement, 12,000 BTU, PTAC-1	9.8 EER	10.9-(12000/1000) EER=8.344 EER	PTAC AC units schedule, drawing M-301
Table 503.2.3(4)	Warm air furnaces and combination warm air furnaces/air-conditioning units, warm air duct furnaces and unit heaters	N/A	N/A	N/A	N/A
Table 503.2.3(5)	Boilers, Gas and Oil Fired	Oil fired, 250,000 Btu input, B-1	82% AFUE	80% AFUE	Boiler schedule, drawing M-301
Table 503.2.3(6)	Condensing Units, Electrically operated	N/A	N/A	Table 503.2.3(6)	N/A

Applicants must include reference to the applicable Supporting Documentation for EACH item within the Tabular Analysis.

Sample Tabular Analysis - 2

Example of Tabular Analysis for Commercial Alterations / Renovations

NYCECC Citation	Provision	Item Description	Proposed Design Value	Code Prescriptive Value	Supporting Documentation
503.4.5.1	Single duct VAV system, terminal devices	N/A	N/A	Terminal devices shall be capable of reducing primary supply air before reheating or recooling takes place	N/A
503.4.5.2	Dual duct and mixing VAV systems, terminal devices	N/A	N/A	Terminal devices shall be capable of reducing air from one duct to a minimum before mixing takes place	N/A
503.4.5.3	Single fan dual duct and mixing VAV systems, economizers	N/A	N/A	Individual dual duct or mixing heating and cooling systems with a single fan and capacities greater than 90,000 Btu/h shall not be equipped with air economizers	N/A
503.4.5.4	VAV System with Multiple Zone, supply-air temperature reset controls*	N/A	N/A	Control system shall automatically reset supply-air temperature in response to building load or O.A. temperature	N/A
503.4.6	Heat Recovery for Service Water Heating for systems*	N/A	N/A	Provide condenser water heat recovery, required for 24 hr/day operations, with water cooled systems over 6 million btu/h	N/A
503.4.7, table 503.4.7	Hot Gas Bypass Limitation	N/A	N/A	Hot gas bypass is allowed only on systems with multiple steps of unloading or continuous capacity modulation. Allowed Bypass capacity per table 503.4.7	N/A
504	Service Water Heating				
504.2	Equipment Performance Efficiency	Domestic Water Heater, DWH-1	80% Et, instantaneous Gas, 210,000 Btu/h	Shall meet efficiency requirements of table 504.2	See plumbing schedules, drawing P-300
504.3	Temperature Controls	Temperature Controls	Holby Valve, mixed water temperature set for 90 degrees F.	Controls shall allow 110 degree F set point for dwellings, and 90 degrees F for other occupancies. Lavatories in public restrooms shall be limited to 110 degrees F	See plumbing schedules, drawing P-300
504.4	Heat Traps	N/A	N/A	Water heating equipment shall be provided with heat traps on the supply and discharge piping if not integrated with equipment	N/A
504.5	Pipe Insulation	Pipe Insulation	1" insulation shall be used on all hot water service piping	Automatic circulating hot water systems-1" insulation. First 8' pipe in non-circulating systems without integral heat traps-0.5" insulation. Conductivity for insulation shall not exceed 0.27 Btu/inch/hxft^2xF	See plumbing specification drawings, P-500

Option 2: COMcheck submissions

- COMcheck software, available for free from the US Department of Energy, can be used to prepare energy code compliance calculations.
  - Lists all Mandatory and Prescriptive Compliance requirements related to HVAC and SHW systems
  - Only New York State NYCECC or ASHRAE-90.1 COMcheck forms are permitted (not IECC)
  - Downloads: http://www.energycodes.gov/software.stm

Sample COMcheck

Section 3: Mechanical Systems List

Quantity	System Type & Description
1	AC-1 HVAC unit (Single Zone) : Heating: 1 each - Central Furnace, Gas, Capacity = 648 kBtu/h, Efficiency = 89.00% Ec Cooling: 1 each - Rooftop Package Unit, Capacity = 301 kBtu/h, Efficiency = 10.10 EER, Air-Cooled Condenser, Air Economizer
1	AHU-1 (Multiple-Zone) : Heating: 1 each - Hydronic or Steam Coil, Hot Water, Capacity = 295 kBtu/h Cooling: 1 each - Hydronic Coil, Capacity = 296 kBtu/h, Water Economizer
1	AC-2/CU-2 (Single Zone) : Cooling: 1 each - Split System, Capacity = 18 kBtu/h, Efficiency = 13.50 SEER, Air-Cooled Condenser
1	AC-3/CU-3 (Single Zone) : Cooling: 1 each - Split System, Capacity = 60 kBtu/h, Efficiency = 13.50 SEER, Air-Cooled Condenser, Air Economizer
1	PTAC-1 (Single Zone) : Heating: 1 each - Other, Hot Water, Capacity = 12 kBtu/h Cooling: 1 each - Packaged Terminal Unit, Capacity = 10 kBtu/h, Efficiency = 11.20 EER, Air-Cooled Condenser
1	HP-1 (Single Zone) : Packaged Terminal Heat Pump Heating Mode: Capacity = 16 kBtu/h, Efficiency = 2.96 COP Cooling Mode: Capacity = 10 kBtu/h, Efficiency = 11.25 EER
1	FUR-1 (Single Zone) : Heating: 1 each - Duct Furnace, Gas, Capacity = 43 kBtu/h, Efficiency = 85.00% Ec
1	ASHP-1 (Single Zone) : Split System Heat Pump Heating Mode: Capacity = 87 kBtu/h, Efficiency = 3.32 COP Cooling Mode: Capacity = 100 kBtu/h, Efficiency = 11.20 EER, Air Economizer
1	WSHP-1 (Single Zone) : Water Source Heat Pump Heating Mode: Capacity = 108 kBtu/h, Efficiency = 4.30 COP Cooling Mode: Capacity = 100 kBtu/h, Efficiency = 13.50 EER, Water Economizer

All HVAC systems and details should use the same identification and keying in the Energy Analysis and the Supporting Documentation (Drawings and Schedules) for clear cross-reference.

Option 3: Energy Cost Budget Worksheet

- Either NYCECC Section 506 or the Energy Cost Budget Method of ASHRAE 90.1 can be used to demonstrate compliance.
  - Applicable to New Buildings, Additions, or Alterations
  - Requires computer energy modeling, using software programs approved by the Secretary of State of New York State and the NYC Commissioner of Buildings (e.g., DOE-2.1E, VisualDOE, Energy Plus, eQuest)
  - Compliance is demonstrated using the **EN1** form

Sample EN1 – HVAC & SHW Input

8. Submissions & Inspections

NYC BUILDINGS

EN1 : Energy Cost Budget Worksheet

Do Not Submit Separately. Must be incorporated in the drawing set.

Input information in this form should be reflected in the Supporting Documentation to the permit application.

City	State	Zip	Mobile Telephone
E-Mail			License Number

Energy Model Inputs

NYS approved energy model software

Envelope	Proposed Design Input	Budget (Standard Design) Input
Above-grade wall U-factor	0.102 Btu/h-ft2-F	0.124 Btu/h-ft2-F
Below-grade wall U-factor	0.107 Btu/h-ft2-F	0.107 Btu/h-ft2-F

Heating, Ventilating & Air Conditioning		
Refrigeration equipment type	Air cooled Chiller with multiple compressors, EER = 9.4	Air cooled, packaged DX units EER = 9.3-10.3
Heating equipment type	82% efficient boiler w/ modulating flame controls	80% efficient boiler w/ on-off controls
Demand controlled ventilation (yes/no)	no	no
Economizer type (air or water)	air/water	none
Domestic hot water heating source	Dual Fuel DWH heater	Natural Gas DWH heater

Sample EN1 – HAVC & SHW Input

8. Submissions & Inspections

NYC BUILDINGS

EN1 : Energy Cost Budget Worksheet

Do Not Submit Separately. Must be incorporated in the drawing set.

1 Location Information
House No(s)
Borough
Work on Floor(s)

2 Applicant Information
Last Name

Energy Cost Budget Conformance	Proposed Design Output	Budget (Standard Design) Output
Annual Regulated Energy Cost ($)	1,458,109	1,477,272
Annual Regulated Energy Use (BTU/GSF)	44,161	48,006
Annual Regulated Energy Cost Per Sq. Ft. ($/GSF)	2.31	2.34

rgy Model Output Breakdown

nergy Use Breakdown	Proposed Design Output (% BTU/yr)	Budget (Standard Design) Output (% BTU/yr)
Heating	24.2%	32.9
Cooling	13.9%	7.7
Heat rejection	3.9%	2.4%
Fans	8.9%	8.6%
Pumps	1.2%	2.2%
Lighting	19.3%	19.4%
Unregulated loads (e.g., plug loads, elevators, escalators, kitchen, process equipment, exterior lighting)	28.5%	26.9%
Total	100%	100%

The overall regulated annual energy use and annual energy cost of the Proposed and Budget building designs are summarized at the end of the EN1 form, and this is where compliance or non-compliance is demonstrated

Supporting Documentation

What Type of Supporting Documentation Should be Provided?

Supporting Documentation should:

- Support the values submitted in the Energy Analysis;
- Verify mandatory requirements of the NYCECC are met; and
- Provide a listing and description of the applicable progress inspections required based on the scope of work of the project.

HVAC and SHW documentation should include:

- **ALL** plans, details, notes, and sequences of operation demonstrating that systems, equipment, components, and control sensors meet performance and operating requirements as developed in the Energy Analysis.

Supporting Documentation

What type of Supporting Documentation should be provided?

Supporting Documentation for HVAC and SHW:

- **Floor plans showing:**
  - Terminal Units
  - Controls
  - Duct work and piping
  - HVAC equipment
- **Mechanical schedules showing:**
  - HVAC equipment (terminal units, pumps, fans, energy recovery)
  - Design operating temperatures
  - Performance values (flow rates, efficiencies, nhp)
- **Equipment details showing:**
  - Coils, terminal units, including:
    - Valves
    - Dampers
    - Sensors
- **Control diagrams showing:**
  - Sequences of operation with operating set-points
  - Control valves, dampers and sensors

Sample Supporting Documentation

Sample Building: New Office Facility

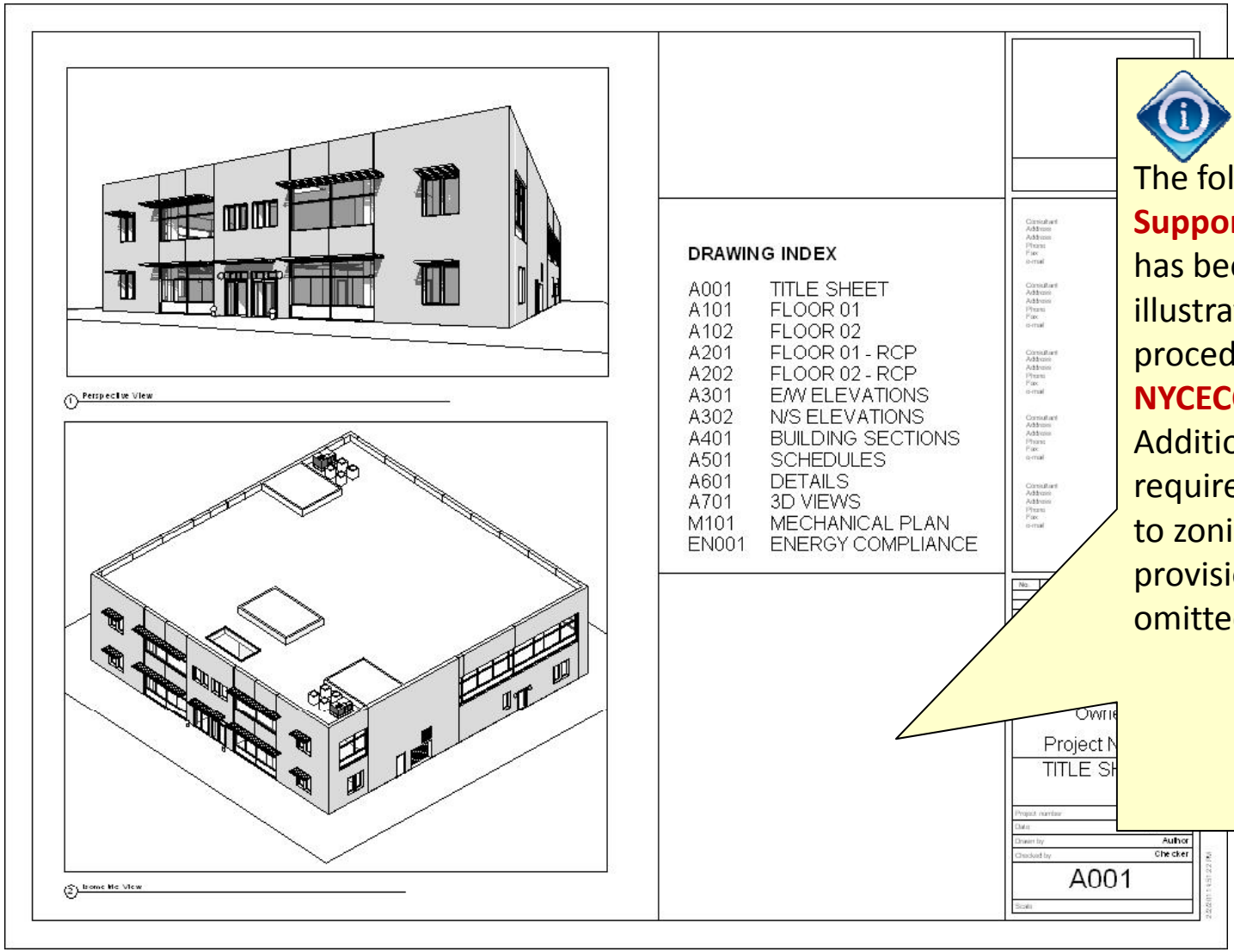

The following **Sample Supporting Documentation** has been developed to illustrate compliance procedures related to the **NYCECC only.**

Additional Information required by the DOB related to zoning and other code provisions is intentionally omitted.

Sample Supporting Documentation

8. Submissions & Inspections

1st FLOOR PLAN

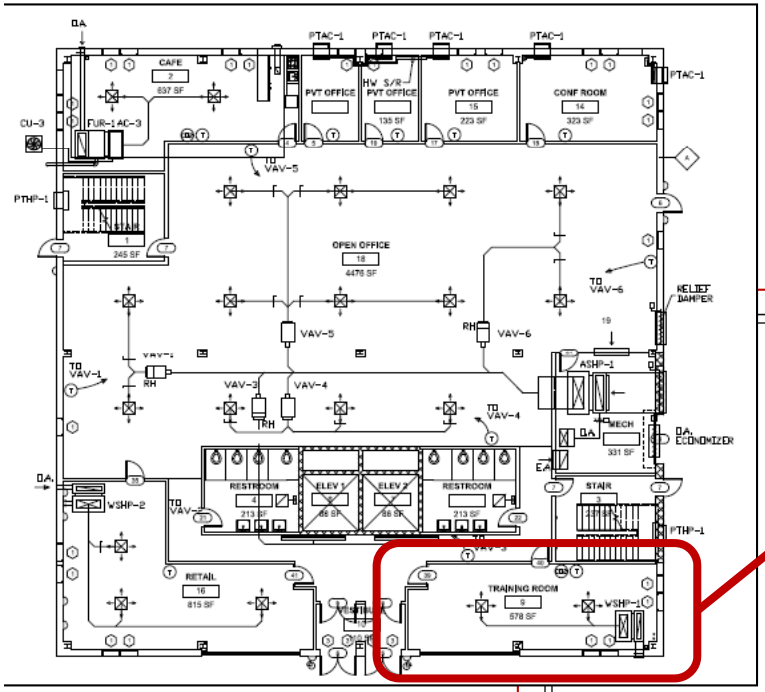

Controls need to be shown and HVAC equipment clearly marked in the plans of the Supporting Documentation.

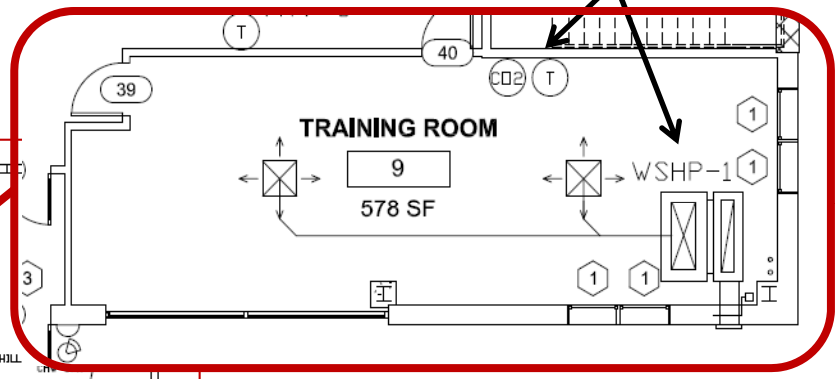

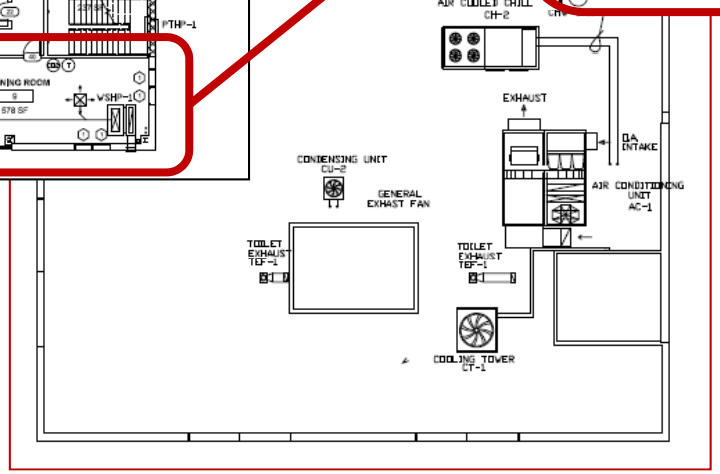

ROOF PLAN

Sample Supporting Documentation

8. Submissions & Inspections

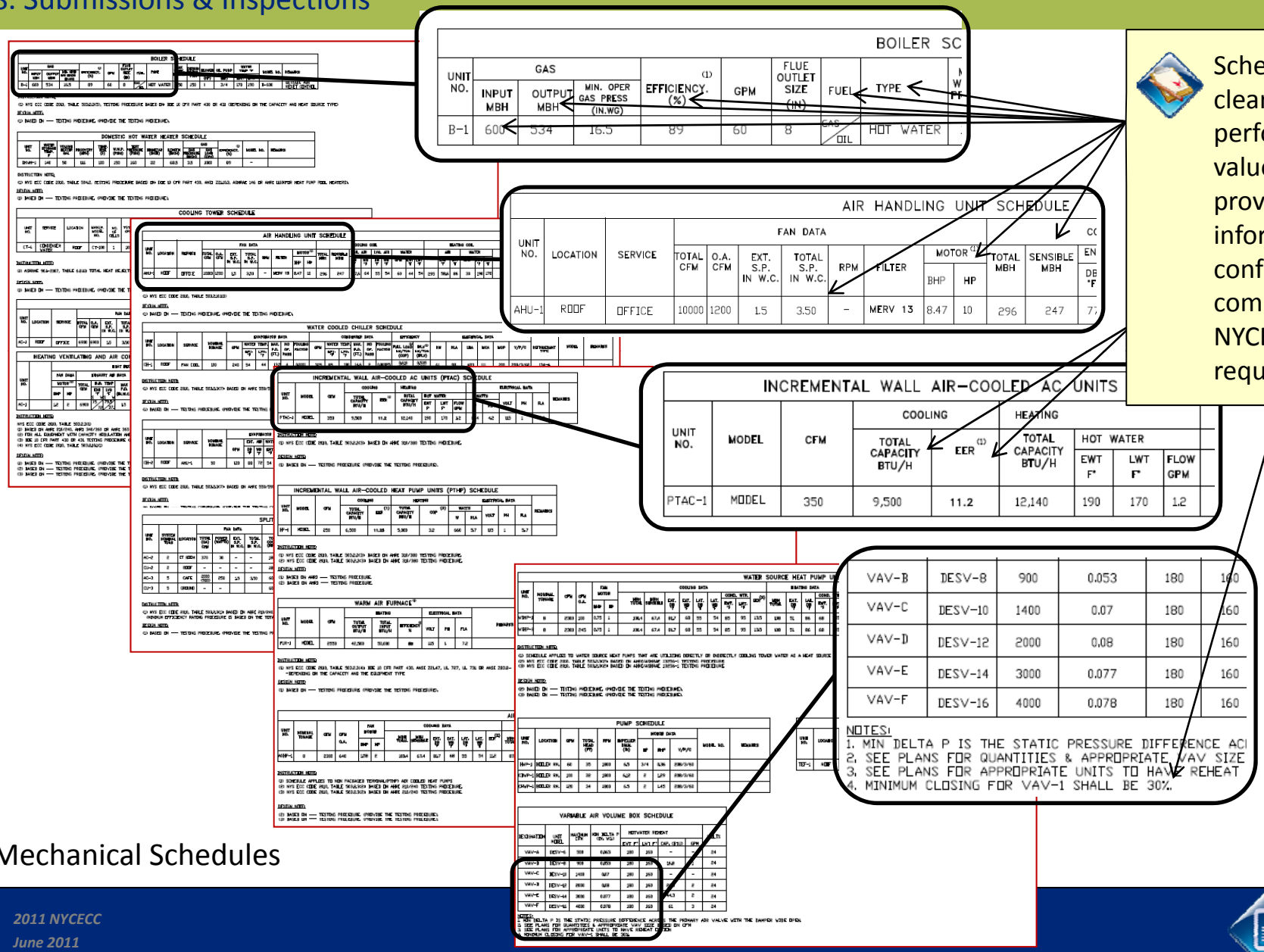

BOILER SC

UNIT NO.	GAS INPUT MBH	GAS OUTPUT MBH	GAS MIN. OPER GAS PRESS (IN.WG)	EFFICIENCY (%) (1)	GPM	FLUE OUTLET SIZE (IN)	FUEL	TYPE
B-1	600	534	16.5	89	60	8	GAS / OIL	HOT WATER

AIR HANDLING UNIT SCHEDULE

UNIT NO.	LOCATION	SERVICE	FAN DATA TOTAL CFM	O.A. CFM	EXT. S.P. IN W.C.	TOTAL S.P. IN W.C.	RPM	FILTER	MOTOR BHP	MOTOR HP	TOTAL MBH	SENSIBLE MBH	CO EN DB °F
AHU-1	ROOF	OFFICE	10000	1200	1.5	3.50	–	MERV 13	8.47	10	296	247	7

INCREMENTAL WALL AIR-COOLED AC UNITS

UNIT NO.	MODEL	CFM	COOLING TOTAL CAPACITY BTU/H	COOLING EER (1)	HEATING TOTAL CAPACITY BTU/H	HOT WATER EWT F°	HOT WATER LWT F°	HOT WATER FLOW GPM
PTAC-1	MODEL	350	9,500	11.2	12,140	190	170	1.2

VAV-B	DESV-8	900	0.053	180	160
VAV-C	DESV-10	1400	0.07	180	160
VAV-D	DESV-12	2000	0.08	180	160
VAV-E	DESV-14	3000	0.077	180	160
VAV-F	DESV-16	4000	0.078	180	160

NOTES:
1. MIN DELTA P IS THE STATIC PRESSURE DIFFERENCE ACI
2. SEE PLANS FOR QUANTITIES & APPROPRIATE VAV SIZE
3. SEE PLANS FOR APPROPRIATE UNITS TO HAVE REHEAT
4. MINIMUM CLOSING FOR VAV-1 SHALL BE 30%.

Schedules shall clearly indicate performance values, and provide sufficient information to confirm compliance with NYCECC requirements.

Mechanical Schedules

Sample Supporting Documentation

Mechanical Details

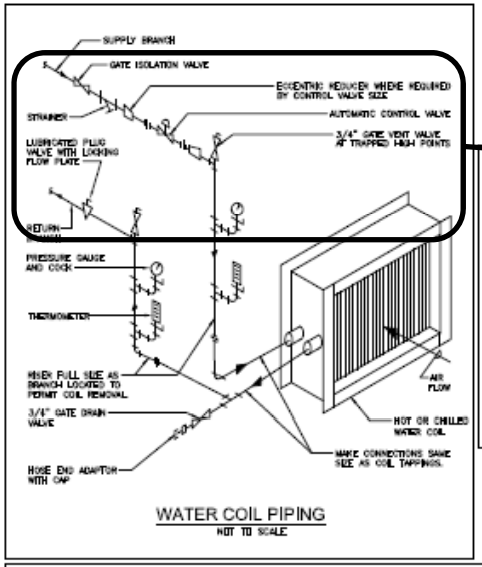

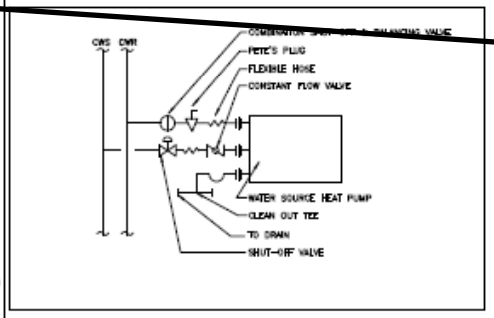

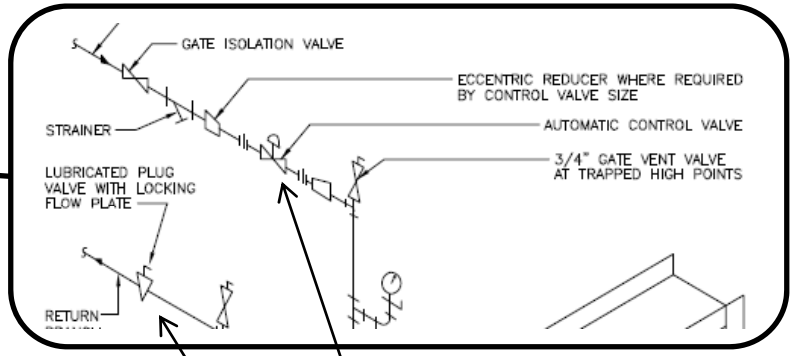

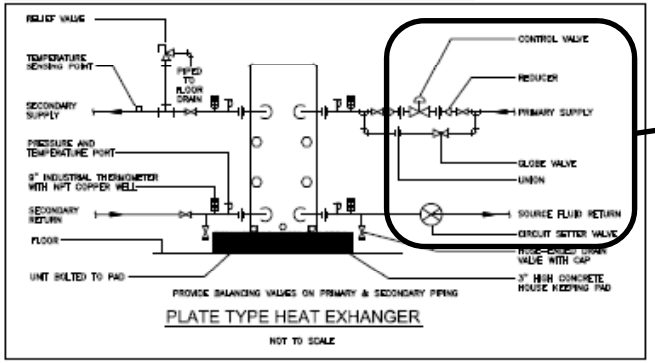

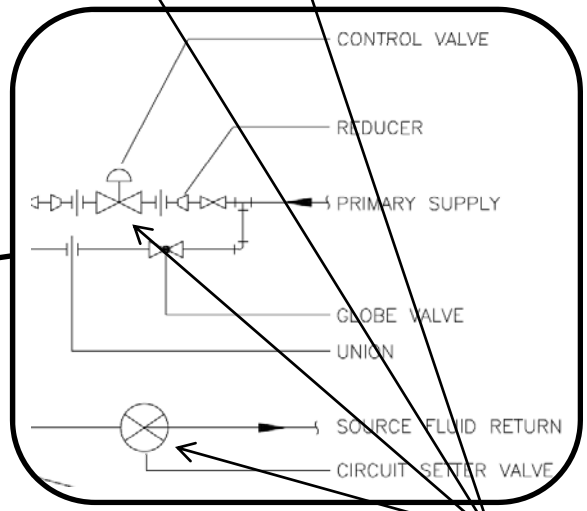

Details need to show control and balancing features.

Sample Supporting Documentation

8. Submissions & Inspections

Mechanical Details

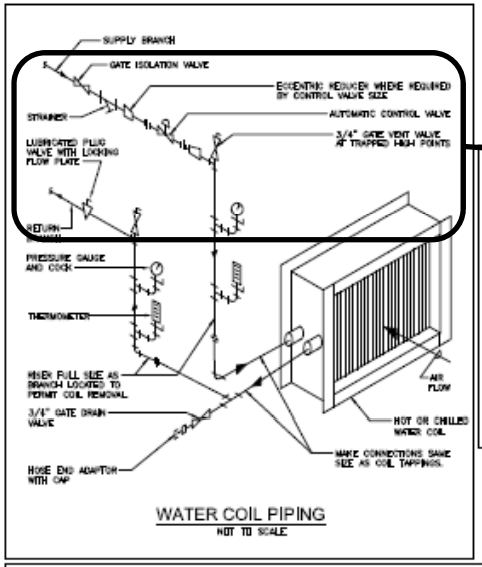

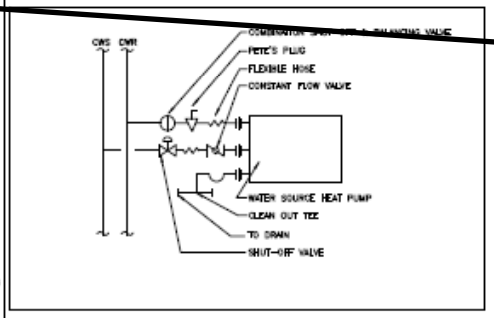

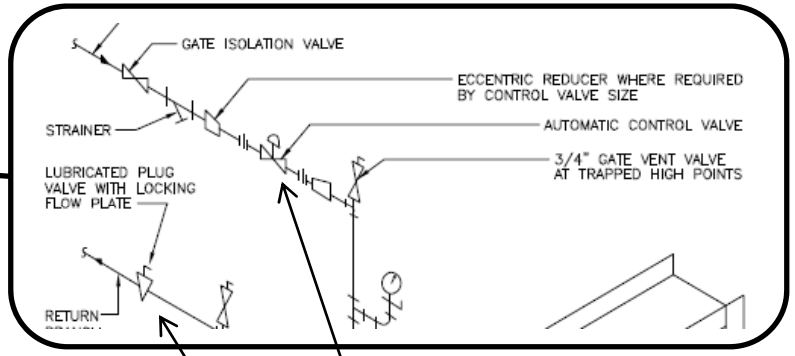

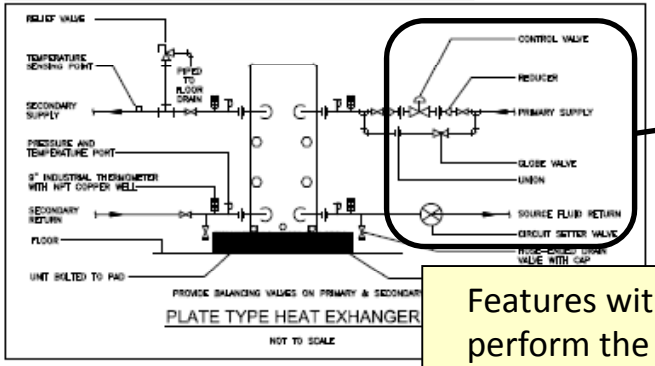

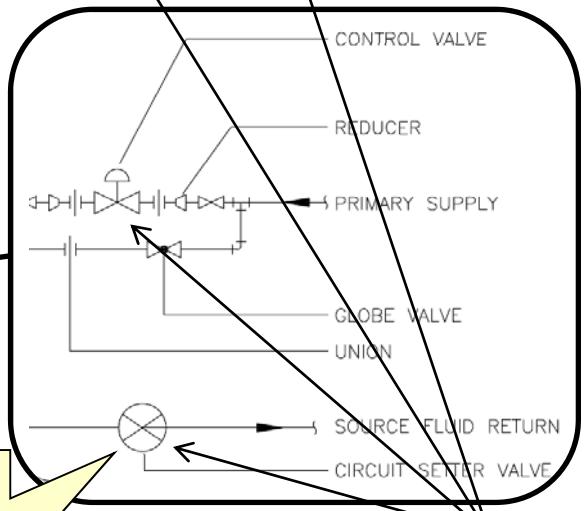

Features with different names may perform the same function with respect to code compliance. For example, a "circuit setter" and "plug valve with locking flow plate" serve the purpose of both balancing valves.

Details need to show control and balancing features.

Sample Supporting Documentation

8. Submissions & Inspections

ENERGY COMPLIANCE NOTES:

THE FOLLOWING STATEMENTS AND REQUIREMENTS INDICATE THAT THE SYSTEM AS DESIGNED IN THESE CONSTRUCTION DOCUMENTS COMPLY TO THE 2010 NEW YORK CITY ENERGY CONSERVATION CODE (NYCECC). THE CONTRACTOR SHALL INSTALL SYSTEMS, ACCESSORIES, AND COMPONENTS, PROGRAMMING AND ANY OTHER MATERIALS AS REQUIRED TO MEET THE CONSTRUCTION DOCUMENTS AND THE STATEMENTS AND REQUIREMENTS IN THIS SECTION.

1. CONTRACTOR SHALL PROVIDE CONNECTIONS AND DEVICES TO MEASURE AND BALANCE WATER FLOW AND PRESSURE FOR ALL HYDRONIC HEATING AND COOLING COILS.

2. FOR ALL SUBMITTALS, FAN MOTORS SHALL BE NO LARGER THAN THE FIRST AVAILABLE MOTOR SIZE GREATER THAN THE BRAKE HP. THE FAN BRAKE HP SHALL BE INDICATED ON THE PRODUCT SUBMITTALS TO ALLOW FOR COMPLIANCE VERIFICATION. FOR FANS LESS THAN 6 BRAKE HP, WHERE THE FIRST AVAILABLE MOTOR LARGER THAN THE BRAKE HP HAS A NAMEPLATE RATING WITHIN 50% OF THE BRAKE HP, THE NEXT LARGER NAMEPLATE MOTOR SIZE MAY BE SELECTED. FOR FANS 6 BRAKE HP AND LARGER, WHERE THE FIRST AVAILABLE MOTOR LARGER THAN THE BRAKE HP HAS A NAMEPLATE RATING WITH 35% OF THE BRAKE HP, THE NEXT LARGER NAMEPLATE MOTOR SIZE MAY BE SELECTED.

3. PROVIDE INSULATION FOR DOMESTIC WATER HEATER RECIRCULATING SYSTEM PIPING, INCLUDING THE SUPPLY AND RETURN PIPING OF THE CIRCULATING TANK TYPE WATER HEATER.

4. PROVIDE AUTOMATIC TIME SWITCHES FOR RECIRCULATING HOT WATER SYSTEMS SET TO SWITCH OFF THE TEMPERATURE MAINTENANCE SYSTEM DURING EXTENDED PERIODS WHEN HOT WATER IS NOT REQUIRED.

5. RECIRCULATING PUMPS USED TO MAINTAIN STORAGE TANK WATER TEMPERATURE, SHALL BE EQUIPPED WITH CONTROLS LIMITING OPERATION TO THE START OF THE HEATING CYCLE TO A MAXIMUM OF 5 MINUTES AFTER THE END OF THE HEATING CYCLE.

6. EACH HEATING OR COOLING SYSTEM SERVING A SINGLE ZONE SHALL HAVE ITS OWN TEMPERATURE CONTROL DEVICE.

7. THE SYSTEM AND ZONE CONTROL SHALL BE A PROGRAMMABLE THERMOSTAT OR OTHER AUTOMATIC CONTROL MEETING THE FOLLOWING CRITERIA (FOR ALL SYSTEMS OVER 6,800 BTU/HR CAPACITY):
   a. CAPABLE OF SETTING BACK TEMPERATURE TO 55°F DURING HEATING AND SETTING UP TO 85°F DURING COOLING
   b. CAPABLE OF AUTOMATICALLY SETTING BACK OR SHUTTING DOWN SYSTEMS DURING UNOCCUPIED HOURS USING 7 DIFFERENT DAY SCHEDULES
   c. HAVE AN ACCESSIBLE 2-HOUR OCCUPANT OVERRIDE
   d. HAVE A BATTERY BACK-UP CAPABLE OF MAINTAINING PROGRAMMED SETTINGS FOR AT LEAST 10 HOURS WITHOUT POWER.
   e. THERMOSTATS CONTROLLING BOTH HEATING AND COOLING SHALL BE MANUAL CHANGE OVER OR SHALL BE CAPABLE OF MAINTAINING A 5°F DEAD BAND (A RANGE OF TEMPERATURE WHERE NO HEATING OR COOLING IS PROVIDED).

8. ALL DUCTS SHALL BE INSTALLED TO CODE REQUIREMENTS MEETING A PRESSURE CLASS OF 2" AND LESS.

9. AIR DUCTS AND PLENUMS SHALL BE INSULATED TO THE FOLLOWING LEVELS:
   a. SUPPLY AND RETURN AIR DUCTS FOR CONDITIONED AIR LOCATED IN UNCONDITIONED SPACES (SPACES NEITHER HEATED NOR COOLED) SHALL BE INSULATED WITH A MINIMUM OF R-5. UNCONDITIONED SPACES INCLUDE ATTICS, CRAWL SPACES, UNHEATED BASEMENTS, AND UNHEATED GARAGES.
   b. SUPPLY AND RETURN AIR DUCTS AND PLENUMS SHALL BE INSULATED TO A MINIMUM OF R-8 WHEN LOCATED OUTSIDE THE BUILDING.
   c. WHEN DUCTS ARE LOCATED WITHIN EXTERIOR COMPONENTS (E.G., FLOORS OR ROOFS), MINIMUM R-8 INSULATION IS REQUIRED ONLY BETWEEN THE DUCT AND THE BUILDING EXTERIOR.
   DUCT INSULATION IS NOT REQUIRED ON DUCTS LOCATED WITHIN EQUIPMENT.
   DUCT INSULATION IS NOT REQUIRED WHEN THE DESIGN TEMPERATURE DIFFERENCE BETWEEN THE INTERIOR AND EXTERIOR OF THE DUCT OR PLENUM DOES NOT EXCEED 15°F.

10. MECHANICAL FASTENERS AND SEALS, MASTICS, OR GASKETS SHALL BE USED WHEN CONNECTING DUCTS TO FANS AND OTHER AIR DISTRIBUTION EQUIPMENT, INCLUDING MULTIPLE-ZONE TERMINAL UNITS.

11. ALL JOINTS, LONGITUDINAL AND TRANSVERSE SEAMS, AND CONNECTIONS IN DUCTWORK SHALL BE SECURELY FASTENED AND SEALED WITH WELDS, GASKETS, MASTIC (ADHESIVES), MASTIC PLUS EMBEDDED FABRIC SYSTEMS, OR TAPES INSTALLED IN ACCORDANCE WITH THE MANUFACTURER'S INSTRUCTIONS. TAPES AND MASTICS SHALL BE LISTED AND LABELED IN ACCORDANCE WITH UL 181A AND SHALL BE MARKED "181A-P" FOR PRESSURE SENSITIVE TAPE, "181A-M" FOR MASTIC OR "181A-H" FOR HEAT-SENSITIVE TAPE. TAPES AND MASTICS USED TO SEAL FLEXIBLE AIR DUCTS AND FLEXIBLE AIR CONNECTORS SHALL COMPLY WITH UL 181B AND SHALL BE MARKED "181B-FX" FOR PRESSURE-SENSITIVE TAPE OR "181B-M" FOR MASTIC. UNLISTED DUCT TAPE IS NOT PERMITTED AS A SEALANT ON ANY DUCTS.

12. ALL PIPES SERVING SPACE-CONDITIONING SYSTEMS SHALL BE INSULATED AS FOLLOWS:

HOT WATER PIPING FOR HEATING SYSTEMS >= 105 F:
1 1/2 IN. FOR PIPES <=1 1/2 IN. NOMINAL DIAMETER.
2 IN. FOR PIPES >1 1/2 IN. NOMINAL DIAMETER.

CHILLED WATER, REFRIGERANT, AND BRINE PIPING SYSTEMS <=55 F:
1 1/2 IN. INSULATION FOR PIPES <=1 1/2 IN. NOMINAL DIAMETER.
1 1/2 IN. INSULATION FOR PIPES >1 1/2 IN. NOMINAL DIAMETER.
PIPE INSULATION CONDUCTIVITY SHALL BE 0.27 BTU/IN(H-FT2-°F) OR LESS

STEAM PIPING:
1 1/2 IN. INSULATION FOR PIPES <=1 1/2 IN. NOMINAL DIAMETER.
3 IN. INSULATION FOR PIPES >1 1/2 IN. NOMINAL DIAMETER.

PIPE INSULATION IS NOT REQUIRED FOR FACTORY-INSTALLED PIPING WITHIN HVAC EQUIPMENT.
PIPE INSULATION IS NOT REQUIRED FOR PIPING WITHIN ROOM FAN-COIL (WITH AHRI440 RATING) AND UNIT VENTILATORS (WITH AHRI840 RATING).
PIPE INSULATION IS NOT REQUIRED FOR RUNOUT PIPING NOT EXCEEDING 4 FT IN LENGTH AND 1 IN. IN DIAMETER BETWEEN THE CONTROL VALVE AND HVAC COIL.

13. SERVICE HOT WATER PIPING, SHALL BE INSULATED TO 1/2 IN. IF PIPE LESS THAN 1 IN. NOMINAL DIAMETER, LARGER PIPE SHALL BE INSULATED TO 1 IN. PIPE INSULATION CONDUCTIVITY SHALL BE 0.27 BTU.IN/(H-FT2-°F) OR LESS.

14. OPERATION AND MAINTENANCE DOCUMENTATION SHALL BE PROVIDED TO THE OWNER THAT INCLUDES AT LEAST THE FOLLOWING INFORMATION:
   a. EQUIPMENT CAPACITY (INPUT AND OUTPUT) AND REQUIRED MAINTENANCE ACTIONS
   b. EQUIPMENT OPERATION AND MAINTENANCE MANUALS
   c. HVAC SYSTEM CONTROL MAINTENANCE AND CALIBRATION INFORMATION, INCLUDING WIRING DIAGRAMS, SCHEMATICS, AND CONTROL SEQUENCE DESCRIPTIONS. DESIRED OR FIELD-DETERMINED SET POINTS SHALL BE PERMANENTLY RECORDED ON CONTROL DRAWINGS, AT CONTROL DEVICES, OR, FOR DIGITAL CONTROL SYSTEMS, IN PROGRAMMING COMMENTS
   d. COMPLETE NARRATIVE OF HOW EACH SYSTEM IS INTENDED TO OPERATE.

15. TEMPERATURE CONTROL SHALL BE PROVIDED TO LIMIT THE MAXIMUM TEMPERATURE OF WATER DELIVERED FROM LAVATORY FAUCETS IN PUBLIC FACILITY RESTROOMS TO 110°F.

16. HOT WATER SPACE-HEATING SYSTEMS WITH A CAPACITY EXCEEDING 300 KBTU/H SUPPLYING HEATED WATER TO COMFORT CONDITIONING SYSTEMS INCLUDE CONTROLS THAT AUTOMATICALLY RESET SUPPLY WATER TEMPERATURES BY REPRESENTATIVE BUILDING LOADS OR OUTSIDE AIR TEMPERATURE.

17. BALANCING DEVICES ARE PROVIDED IN ACCORDANCE WITH IMC (2009) 603.17.

18. OUTDOOR AIR SUPPLY AND EXHAUST SYSTEMS SHALL HAVE MOTORIZED DAMPERS THAT AUTOMATICALLY SHUT WHEN THE SYSTEMS OR SPACES SERVED ARE NOT IN USE. DAMPERS ARE CAPABLE OF AUTOMATICALLY SHUTTING OFF DURING PREOCCUPANCY BUILDING WARM-UP, COOL-DOWN, AND SETBACK, EXCEPT WHEN VENTILATION REDUCES ENERGY COSTS (E.G., NIGHT PURGE) OR WHEN VENTILATION MUST BE SUPPLIED TO MEET CODE REQUIREMENTS. BOTH OUTDOOR AIR SUPPLY AND EXHAUST AIR DAMPERS MUST HAVE A MAXIMUM LEAKAGE RATE OF 3 CFM/FT2 AT 1.0 IN W.G. WHEN TESTED IN ACCORDANCE WITH AMCA STANDARD 500.

7. THE SYSTEM AND ZONE CONTROL SHALL BE A PROGRAMMABLE THERMOSTAT OR OTHER AUTOMATIC CONTROL MEETING THE FOLLOWING CRITERIA (FOR ALL SYSTEMS OVER 6,800 BTU/HR CAPACITY):
   a. CAPABLE OF SETTING BACK TEMPERATURE TO 55°F DURING HEATING AND SETTING UP TO 85°F DURING COOLING
   b. CAPABLE OF AUTOMATICALLY SETTING BACK OR SHUTTING DOWN SYSTEMS DURING UNOCCUPIED HOURS USING 7 DIFFERENT DAY SCHEDULES
   c. HAVE AN ACCESSIBLE 2-HOUR OCCUPANT OVERRIDE
   d. HAVE A BATTERY BACK-UP CAPABLE OF MAINTAINING PROGRAMMED SETTINGS FOR AT LEAST 10 HOURS WITHOUT POWER.
   e. THERMOSTATS CONTROLLING BOTH HEATING AND COOLING SHALL BE MANUAL CHANGE OVER OR SHALL BE CAPABLE OF MAINTAINING A 5°F DEAD BAND (A RANGE OF TEMPERATURE WHERE NO HEATING OR COOLING IS PROVIDED).

8. ALL DUCTS SHALL BE INSTALLED TO CODE REQUIREMENTS MEETING A PRESSURE CLASS OF 2" AND LESS.

9. AIR DUCTS AND PLENUMS SHALL BE INSULATED TO THE FOLLOWING LEVELS:
   a. SUPPLY AND RETURN AIR DUCTS FOR CONDITIONED AIR LOCATED IN UNCONDITIONED SPACES (SPACES NEITHER HEATED NOR COOLED) SHALL BE INSULATED WITH A MINIMUM OF R-5. UNCONDITIONED SPACES INCLUDE ATTICS, CRAWL SPACES, UNHEATED BASEMENTS, AND UNHEATED GARAGES.
   b. SUPPLY AND RETURN AIR DUCTS AND PLENUMS SHALL BE INSULATED TO A MINIMUM OF R-8 WHEN LOCATED OUTSIDE THE BUILDING.
   c. WHEN DUCTS ARE LOCATED WITHIN EXTERIOR COMPONENTS (E.G., FLOORS OR ROOFS), MINIMUM R-8 INSULATION IS REQUIRED ONLY BETWEEN THE DUCT AND THE BUILDING EXTERIOR.
   DUCT INSULATION IS NOT REQUIRED ON DUCTS LOCATED WITHIN EQUIPMENT.
   DUCT INSULATION IS NOT REQUIRED WHEN THE DESIGN TEMPERATURE DIFFERENCE BETWEEN THE INTERIOR AND EXTERIOR OF THE DUCT OR PLENUM DOES NOT EXCEED 15°F.

10. MECHANICAL FASTENERS AND SEALS, MASTICS, OR GASKETS SHALL BE USED WHEN CONNECTING DUCTS TO FANS AND OTHER AIR DISTRIBUTION EQUIPMENT, INCLUDING MULTIPLE-ZONE TERMINAL UNITS.

Mechanical/Energy Code Compliance Notes

Notes shall contain Code requirements not shown elsewhere in documents. Note number and drawings should be indexed/referenced to Code citation in the Energy Analysis.

Sample Energy Analysis

8. Submissions & Inspections

COMcheck Report

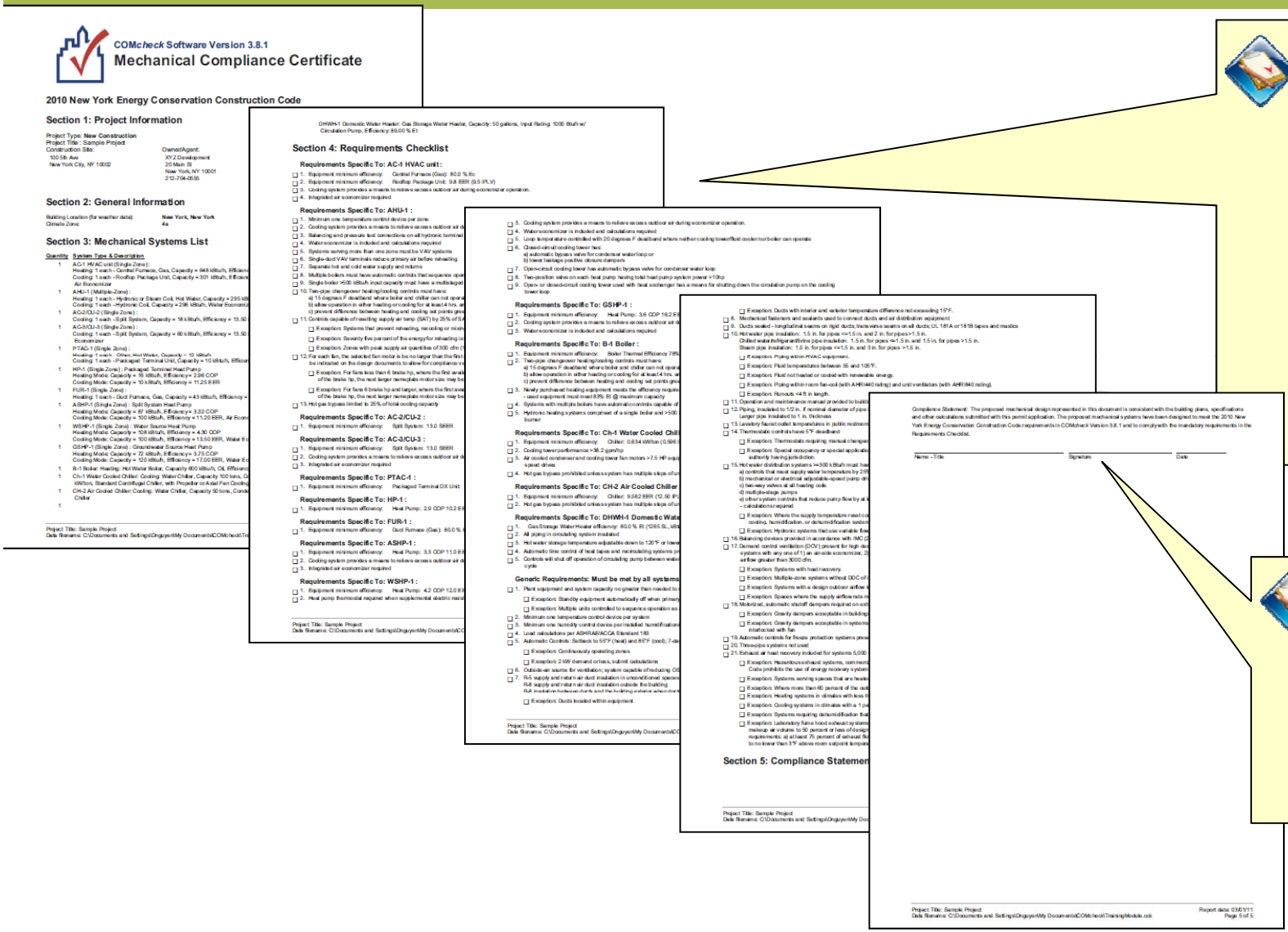

Confirm that the Energy Code compliance path is consistent with the rest of the application, and be sure to check-off the applicable Certification Requirements in the COMcheck Summary.

Sign and Seal either the title block or the COMcheck Summary as appropriate.

Sample Progress Inspection List

8. Submissions & Inspections

	Inspection/Test	Frequency (minimum)	Reference Standard (See ECC Chapter 6) or Other Criteria	ECC or Other Citation
IIB	**Mechanical and Service Water Heating Inspections**			
IIB1	**Fireplaces:** Provision of combustion air and tight-fitting fireplace doors shall be verified by visual inspection.	Prior to final construction inspection	Approved construction documents; ANSI Z21.60 (see also MC 904), ANSI Z21.50	303.1.5; BC 2111; MC Chapters 7, 9; FGC Chapter 6
IIB2	**Outdoor air intakes and exhaust openings:** Dampers for stair and elevator shaft vents and other outdoor air intakes and exhaust openings integral to the building envelope shall be visually inspected to verify that such dampers, except where permitted to be gravity dampers, comply with approved construction drawings. Manufacturer's literature shall be reviewed to verify that the product has been tested and found to meet the standard.	As required during installation	Approved construction documents; AMCA 500D	502.4.4
IIB3	**HVAC, service water heating and pool equipment sizing and performance:** Equipment sizing, efficiencies and other performance factors of all major equipment units, as determined by the applicant of record, and no less than 15% of minor equipment units, shall be verified by visual inspection and, where necessary, review of manufacturer's data. Pool heaters and covers shall be verified by visual inspection.	Prior to final plumbing and construction inspection	Approved construction documents	503.2, 504.2, 504.7
IIB4	**HVAC system controls and economizers and service hot water system controls:** No less than 20% of each type of required controls and economizers shall be verified by visual inspection and tested for functio per operation.	After installation and prior to final electrical and construction inspection, except that for controls with seasonally dependent functionality, such	Approved construction documents, including control system narratives; ASHRAE Guideline 1: The HVAC Commissioning Process,	503.2.4, 503.2.5.1, 503.2.11, 503.3, 503.4, 504.3, 504.6, 504.7
IIB5	**Duct, plenum and piping insulation and seal** insulation placement and values. Joints, lon inspected for proper sealing.			

A Progress Inspections Table must be included in the Supporting Documentation drawings, noting all applicable inspections to be performed based on the scope of work, plus Reference Standards and NYCECC Citations.
The design applicant must also include contract language requiring the contractor to identify time in the construction schedule for the progress inspections.

Progress Inspections - Review

? What are the applicable progress inspections for HVAC & SHW?

Inspection / Test	Frequency
Fireplaces Provision of combustion air and tight-fitting fireplace doors shall be **verified by visual inspection**.	Prior to final construction inspection
Outdoor Air Intakes and Exhaust Openings Dampers for stair and elevator shaft vents and other Outdoor Air (OA) intakes and exhaust openings integral to the building envelope shall be **visually inspected** to verify that such dampers, except where permitted to be gravity dampers, comply with approved construction drawings. **Manufacturer's literature shall be reviewed** to verify that the product has been tested and found to meet the standard.	As required during installation
HVAC, Service Water and Pool Equipment Sizing Equipment sizing, efficiencies and other performance factors of all major equipment units, as determined by the applicant of record, and no less than 15% of minor equipment units, shall be **verified by visual inspection and, where necessary, review of manufacturer's data**. Pool heaters and covers shall be verified by visual inspection.	Prior to final plumbing and construction inspection

Reference: 1 RCNY §5000-01

Progress Inspections - Review

8. Submissions & Inspections

? What are the applicable progress inspections for HVAC & SHW?

Inspection / Test		Frequency
HVAC System Controls and Economizers and Service Hot Water System Controls		After installation and prior to final electrical and construction inspection, except that for controls with seasonally dependent functionality, such testing shall be performed before sign-off for issuance of a Final Certificate of Occupancy
No less than 20% of each type of required controls and Economizers shall be **verified by visual inspection and tested** for functionality and proper operation. Such controls shall include, but are not limited to:		
-Thermostatic -Set point overlap restriction -Off-hour -Shutoff damper -Snow-melt system -Demand control systems -Outdoor heating systems -Zones -Economizers -Air systems -Variable air volume fan -Hydronic systems -Heat rejection equipment fan speed -Complex mechanical systems serving multiple zones -Ventilation -Energy recovery systems -Hot gas bypass limitation -Temperature -Service water heating -Hot water system -Pool heater and time switches -Exhaust hoods -Radiant heating systems	Controls with seasonally dependent functionality: Controls whose complete operation cannot be demonstrated due to prevailing weather conditions typical of the season during which progress inspections will be performed shall be permitted to be signed off for the purpose of a Temporary Certificate of Occupancy with only a visual inspection, provided, however, that the progress inspector shall perform a supplemental inspection where the controls are visually inspected and tested for functionality and proper operation during the next immediate season thereafter. The owner shall provide full access to the progress inspector within two weeks of the progress inspector's request for such access to perform the progress inspection. For such supplemental inspections, the Department shall be notified by the approved progress inspection agency of any unresolved deficiencies in the installed work within 180 days of such supplemental inspection.	

Progress Inspections - Review

? What are the applicable progress inspections for HVAC & SHW?

Inspection / Test	Frequency
Duct, Plenum and Piping Insulation and Sealing Installed duct and piping insulation shall be **visually inspected to verify proper insulation placement and values**. Joints, longitudinal and transverse seams and connections in ductwork shall be **visually inspected** for proper sealing.	After installation and prior to closing shafts, ceilings and walls
Air Leakage Testing for High-pressure Duct Systems For duct systems designed to operate at static pressures in excess of 3 inches w.g. (746 Pa), **representative sections, as determined by the progress inspector, totaling at least 25% of the duct area**, per ECC 503.2.7.1.3, **shall be tested** to verify that actual air leakage is below allowable amounts.	After installation and sealing and prior to closing shafts, ceilings and walls

Reference: 1 RCNY §5000-01

Progress Inspections – TR8 Report

8. Submissions & Inspections

NYC Buildings

TR8: Technical Report
Statement of Responsibility for
Energy Code Progress Inspections
This form must be typewritten

Orient and affix BIS job number label here

1 **Location Information** *Required for all applications.*

3	**Energy Code Progress Inspection** *Required for applications where Energy Code Compliance Progress Inspection is marked Yes on TR1*				
3A	← Identification of Requirement		3B Identification of Responsibilities	3C Certificate of Complete Inspections / Tests	3D Withdraw Responsibilities
Y	N Progress Inspections	Table Reference in 1RCNY §5000-01(h) (1)and (2)	Initial & Date	Initial & Date	Initial & Date
☐	☐ Dampers integral to building envelope	(IB2), (IIB2)			
☐	☐ HVAC and service water heating equipment	(IB3), (IIB3)			
☐	☐ HVAC and service water heating system controls	(IB4), (IIB4)			
☐	☐ Duct plenum and piping insulation and sealing	(IB5), (IIB5)			
☐	☐ Duct leakage testing	(IB6), (IIB6)			

☐ ☐ Air sealing and insulation — testing	(IA7)			
☐ ☐ Projection factors	(IIA7)			
☐ ☐ Loading deck weather seals	(IIA8)			
☐ ☐ Vestibules	(IIA9)			
☐ ☐ Fireplaces	(IB1), (IIB1)			
☐ ☐ Dampers integral to building envelope	(IB2), (IIB2)			
☐ ☐ HVAC and service water heating equipment	(IB3), (IIB3)			
☐ ☐ HVAC and service water heating system controls	(IB4), (IIB4)			
☐ ☐ Duct plenum and piping insulation and sealing	(IB5), (IIB5)			
☐ ☐ Duct leakage testing	(IB6), (IIB6)			
☐ ☐ Electrical metering	(IC1), (IIC1)			
☐ ☐ Lighting in dwelling units	(IC2), (IIC2)			
☐ ☐ Interior lighting power	(IIC3)			
☐ ☐ Exterior lighting power	(IIC4)			
☐ ☐ Lighting controls	(IIC5)			
☐ ☐ Exit signs	(IIC6)			
☐ ☐ Tandem wiring	(IIC7)			
☐ ☐ Electrical motors	(IIC8)			
☐ ☐ Maintenance information	(ID1), (IID1)			
☐ ☐ Permanent certificate	(ID2)			

01/11

Progress Inspections – TR8 Report

8. Submissions & Inspections

NYC Buildings

TR8: Technical Report
Statement of Responsibility for
Energy Code Progress Inspection
This form must be typewritten

1 Location Information *Required for all applications.*

The applicant (registered professional) defines the required progress inspections by checking "Y" or "N" in the left-hand column under section 3 of the TR8 form.

3	Energy Code Progress Inspection *...or applications where Energy Code Compliance Progress Inspection is marked Yes on TR1*				
3A	← Identification of Requirement		3B Identification of Responsibilities	3C Certificate of Complete Inspections / Tests	3D Withdraw Responsibilities
Y	N Progress Inspection	Table Reference in 1RCNY §5000-01(h) (1)and (2)	Initial & Date	Initial & Date	Initial & Date
☐	☐ Dampers integral to building envelope	(IB2), (IIB2)			
☐	☐ HVAC and service water heating equipment	(IB3), (IIB3)			
☐	☐ HVAC and service water heating system controls	(IB4), (IIB4)			
☐	☐ Duct plenum and piping insulation and sealing	(IB5), (IIB5)			
☐	☐ Duct leakage testing	(IB6), (IIB6)			

☐ ☐ Air sealing and insulation — testing	(IA7)			
☐ ☐ Projection factors	(IIA7)			
☐ ☐ Loading deck weather seals	(IIA8)			
☐ ☐ Vestibules	(IIA9)			
☐ ☐ Fireplaces	(IB1), (IIB1)			
☐ ☐ Dampers integral to building envelope	(IB2), (IIB2)			
☐ ☐ HVAC and service water heating equipment	(IB3), (IIB3)			
☐ ☐ HVAC and service water heating system controls	(IB4), (IIB4)			
☐ ☐ Duct plenum and piping insulation and sealing	(IB5), (IIB5)			
☐ ☐ Duct leakage testing	(IB6), (IIB6)			
☐ ☐ Electrical metering	(IC1), (IIC1)			
☐ ☐ Lighting in dwelling units	(IC2), (IIC2)			
☐ ☐ Interior lighting power	(IIC3)			
☐ ☐ Exterior lighting power	(IIC4)			
☐ ☐ Lighting controls	(IIC5)			
☐ ☐ Exit signs	(IIC6)			
☐ ☐ Tandem wiring	(IIC7)			
☐ ☐ Electrical motors	(IIC8)			
☐ ☐ Maintenance information	(ID1), (IID1)			
☐ ☐ Permanent certificate	(ID2)			

01/11

Prior to Permit, the designated Progress Inspector must initial and date each inspection they will be responsible for, and sign/seal under section 5 of the TR8 form. If multiple Progress Inspectors are involved in a project, each one must submit a signed/sealed TR8 for their scope of inspection services.

Progress Inspections – TR8 Report

8. Submissions & Inspections

NYC Buildings

TR8: Technical Report
Statement of Responsibility for
Energy Code Progress Inspections
This form must be typewritten

Orient and affix BIS job number label here

1	**Location Information** *Required for all applications.*

House No(s) Street Name

Work on Floor(s)

6	**Inspection Applicant's Certification of Completion**

☐ I have completed the items specified herein and certify the following (check one only):

- ☐ All work performed substantially conforms to approved construction documents and has been performed in accordance with applicable provisions of the New York City Energy Conservation Code and other designated rules and regulations.
- ☐ All work performed substantially conforms to approved construction documents and has been performed in accordance with applicable provisions of the New York City Energy Conservation Code and other designated rules and regulations, except as indicated in the attached report.

I am aware of the additional sanctions imposed on false filings by §28-211.1.2 of the Administrative Code.

☐ **Withdrawal of Applicant:** I am withdrawing responsibility for the items of progress inspections and/or tests indicated herein and herewith submit the results or status of the work performed to date.

Name (please print)

Signature Date

P.E. / R.A. Seal *(apply seal, then sign and date over seal)*

01/11

Progress Inspections – TR8 Report

8. Submissions & Inspections

NYC Buildings

TR8: Technical Report
Statement of Responsibility for
Energy Code Progress Inspections
This form must be typewritten

Orient and affix BIS job number label here

1	**Location Information** *Required for all applications.*

House No(s) Street Name

Work on Floor(s)

6	**Inspection Applicant's Certification of Completion**

☐ I have completed the items specified herein and certify the following (check one only):

- ☐ All work performed substantially conforms to approved construction documents and has been performed in accordance with applicable provisions of the New York City Energy Conservation Code and other designated rules and regulations.
- ☐ All work performed substantially conforms to approved construction documents and has been performed in accordance with applicable provisions of the New York City Energy Conservation Code and other designated rules and regulati report.

I am aware of the additional sanctions imposed on false filings by §28-211.1.2 of the Administrative Code.

☐ **Withdrawal of Applicant:** I am withdrawing responsibility for the items of progress inspectio the results or status of the work performed to date.

Name (please print)

Signature Date

P.E. / R.A. Seal *(apply seal, then sign and date over seal)*

01/11

Upon completion of the applicable inspections, the Progress Inspector initials and dates each inspection performed (column 3C). Any inspections assigned to the Progress Inspector that are not performed are addressed through column 3D (withdraw responsibilities). Final signatures and seals are provided in section 6 of the TR8 form.

Progress Inspections – Back-up

Per NYC Administrative Code§28-116.2.3

- A record of all inspections shall be kept by the person performing the inspection.
  - The commissioner can require inspection reports to be filed with the department.
  - Records of inspections shall be maintained for a period of six years after sign-off, or for such other period of time as the commissioner may require
  - Records of inspections shall be made available to the DOB upon request.

EN2 Form:

- This DOB form is signed by the progress inspector, certifying that the values in either the last approved Energy Analysis or in the as-built Energy Analysis represent values in the constructed building.

VSD Controller

CO2 Sensor & Thermostat

While a specific format is not stated, inspection records can include:

- Logs, reports, meeting minutes
- Photographs
- Annotated Drawings

Progress Inspections – EN2 Form

8. Submissions & Inspections

NYC Buildings

EN2: As Built Energy Analysis

This form must be typewritten and submitted in person to the Certificate of Occupancy Division's Borough Office where energy analysis was reviewed.

Orient and affix BIS job number label here

1 Progress Inspector Information *Required for all applications.*

Last Name | First Name | Middle Initial

Business Name | Business Telephone

Business Address | Business Fax

City | State | Zip | Mobile Telephone

License Type *choose one:* ☐ P.E. ☐ R.A.: | License Number

2 Location Information *Required for all applications.*

3 As Built Information *P.E./R.A. responsible for progress inspections, choose one below and sign/seal.*

☐ The as-built conditions of the completed building conform to the originally approved energy analysis and do not require a revised energy analysis.

☐ The energy analysis has been revised according to *one* of the statements below:

- ☐ Attached is a revised energy analysis, prepared, signed and sealed by the registered design professional who prepared the previously submitted and approved energy analysis. The as-built conditions of the completed building conform to this revised energy analysis.
- ☐ The last revised energy analysis was submitted and approved as a post approval amendment on _____(date). The as-built conditions of the completed building conform to this revised energy analysis.

sealed and submitted TR8.

Name (please print)

Signature | Date

P.E. / R.A. Seal *(apply seal, then sign and date over seal)*

01/11

Progress Inspections – EN2 Form

8. Submissions & Inspections

NYC Buildings

EN2: As Built Energy Analysis

This form must be typewritten and submitted in person to the Certificate of Occupancy Division's Borough Office where energy analysis was reviewed.

Orient and affix BIS job number label here

1 Progress Inspector Information *Required for all applications.*

Last Name | First Name | Middle Initial

Business Name | Business Telephone

Business Address | Business Fax

City | State | Zip | Mobile Telephone

License Type *choose one:* ☐ P.E. ☐ R.A.: | License Number

2 Location Information *Required for all applications.*

3 As Built Information *P.E./R.A. responsible for progress inspections, choose one below and sign/seal.*

☐ The as-built conditions of the completed building conform to the originally approved energy analysis and do not require a revised energy analysis.

☐ The energy analysis has been revised according to *one* of the statements below:

☐ Attached is a revised energy analysis, prepared, signed and sealed by the registered design professional who prepared the previously submitted and approved energy analysis. The as-built conditions of the completed building conform to this revised energy analysis.

☐ The last revised energy analysis was submitted and approved as a post approval amendment _____(date). The as-built conditions of the completed building conform to this revised energy analysis.

sealed and submitted TR8.

Name (please print)

Signature | Date

P.E. / R.A. Seal *(apply seal, then sign and date over seal)*

01/11

The Progress Inspectors and design applicants will need to coordinate to ensure that the as-built conditions and approved energy analysis are consistent. An as-built energy analysis update may be required.

HVAC - 2

Slides 84 to 88

9. Resources

Abbreviations Key

CAV (or CV): Constant Air Volume

CHW: Chilled Water

COP: Coefficient of Performance

DB: Dry-Bulb (temperature)

DDC: Direct Digital Control

DOB: Department of Buildings

DX: Direct Expansion

EER: Energy Efficiency Ration

ERV: Energy Recovery Ventilator

HP: Horse Power (Nameplate)

HP: Heat-Pump

BHP: Brake Horse Power

HVAC: Heating Ventilation & Air Conditioning

HW: Hot Water

SHW: Service Hot Water

DHW: Domestic Hot Water

IPLV: Integrated Part-Load Value

NPLV: Non-Standard Part-Load Value

SP: Static Pressure

VAV: Variable Air Volume

VFD: Variable Frequency Drive

VSD: Variable Speed Drive

WB: Wet-Bulb (temperature)

WSHP: Water-Source Heat-Pump

Resources and Links

6. Resources

The resources below have been referenced in this module

Resource	Link
Local Law 1 of 2011	http://www.nyc.gov/html/dob/downloads/pdf/ll1of2011.pdf
Local Law 48 of 2010	http://www.nyc.gov/html/dob/downloads/pdf/ll48of2010.pdf
1 RCNY §5000-01	http://www.nyc.gov/html/dob/downloads/rules/1_RCNY_5000-01.pdf
1 RCNY §101-07	http://www.nyc.gov/html/dob/downloads/rules/1_RCNY_101-07.pdf
Buildings Bulletins	http://www.nyc.gov/html/dob/html/reference/buildings_bulletin.shtml
EN1, EN2, and TR8 Forms	http://www.nyc.gov/html/dob/html/forms/forms_energy.shtml
REScheck/COMcheck	http://www.energycodes.gov/software.stm
PlaNYC	http://www.nyc.gov/html/planyc2030/html/home/home.shtml
New York City Construction Codes	http://www2.iccsafe.org/states/newyorkcity/

DOB Assistance

Questions on the NYCECC can be submitted to the DOB at:

Energycode@buildings.nyc.gov

Image / Photo Credits & Copyrights

Company or Individual	Slide Numbers
Samantha Modell	84
www.energysavers.gov	53