RSP Systems

Reliable Secure Power

DoB Cogen Forum

Presented by Bruce Beckwith

RSP Systems – Sept. 24, 2009

RSP Systems

Reliable Secure Power

WHO WE ARE:

- RSP Systems was founded in 2004 by Cory Glick, President and Gary Blankoph, Vice President. RSP is the Distributor for Capstone Turbine Corp. in the New York and northern New Jersey territories.

- RSP is focused on educating, training and supporting our sales channel and authorized installation contractors so that they can choose the best solution for their clients' facilities on-site power requirements.

- Commissioned in Jan. 2008 the first four legal microturbine sites in the NYC metro area under the new Microturbine Code of Nov./Dec. 2007

- Members of USGBC

- Partnered with WESCO Distribution in May 2008 for marketing and sales channel development.

Management:

- **Cory Glick, President: Co-founder of RSP Systems. He is responsible for day to day operations, business development dealer and sales representative relationships. Cory is in charge of mechanical engineering applications, service contracts and has the responsibility for project overview. Cory has more than 20 years of commercial and industrial mechanical contracting, design-build and service experience.**

- **Gary Blankoph, Vice President: Co-founder of RSP Systems. He is responsible for day to day electrical engineering; equipment and systems software integration, utility interconnect issues, service issues and general project overview. He has been in the electrical contracting business since 1986. Gary has a Master's Electrical License and many years of experience in general construction services.**

- **Bruce Beckwith, Vice President of Sales & Marketing: In May 2007, Bruce joined RSP Systems where his primary responsibility for the company is building and managing the sales department and evaluating facility energy profiles. Prior to joining RSP Systems, Bruce served as a Vice President of Northeast Sales for Capstone Turbine Corp. Prior to joining Capstone, Bruce served as Branch Manager for Wesco Distribution in Maspeth, NY, where he oversaw all major switchgear and lighting projects for the five boroughs of New York. Prior to joining Wesco, for 20 years Bruce was President and owner of a NY electrical contracting firm, and held multi Master's Electrical Licenses since 1980 including the five boroughs of New York, Nassau, Suffolk, Westchester and Connecticut.**

WESCO DISTRIBUTION

Agenda

- Capstone overview
- Technology Description
  - MicroTurbine Engine Cycle
  - Turbo Generator
  - Unique Design
  - Electronics
  - Gas Pack
  - Interconnection Certification
- Applications
  - C65
  - ICHP
  - CCHP
  - CHP
- Economics
  - ICHP System Model
  - CHP Advantage
  - Installation Examples
- Value Proposition
- Questions & Answers

25 Capstone C30s operating at Harbec Plastics in Ontario, NY since 2000

RSP Systems
Reliable Secure Power

Capstone: A Big Small Company

- Founded 1988
- First to introduce microturbine energy products
- 100% microturbine focused
- Only USA owned and operated microturbine manufacturer
- The world leader in microturbines
  - ✓ >4,000 30/6x-kW production units sold and shipped
  - ✓ 4th & 5th generation products
- ISO 9001:2000 UL-certified
- Offices in NYC, LA, Mexico City, Milan, Shanghai & Tokyo

WESCO DISTRIBUTION

RSP Systems
Reliable Secure Power

Capstone

Microturbine Applications

CHP

CCHP

Best Value for Onsite Energy Generation

Resource Recovery

Power Quality, Reliability, Security

Four Target Applications

WESCO DISTRIBUTION®

RSP Systems
Reliable Secure Power

Capstone MicroTurbine Certifications

The Capstone MicroTurbine is UL listed for both the US and Canada

- ❑UL and cUL – Underwriters Laboratories, Inc.
  - ❑Certified to UL 1741 (grid interconnect for inverters)
  - ❑Certified to UL 2200 (Engine generator systems)
  - ❑Certified to NEC 496 CID2 groups C/D (Engine Generators for Use in Hazardous Locations)

- ❑NEC United States National Electric Code
  - ❑NFPA 70 (national Electric Code)
  - ❑NFPA 37 (Gas Turbine Generators)
  - ❑NFPA 496 (Equipment for Hazardous Locations)
  - ❑All Certified under UL 2200

- ❑NEMA National Electrical Manufacturers Association
  - ❑The Capstone MicroTurbine conforms to NEMA 250 3R
  - ❑Certified under UL 2200

- ❑ IEEE Standards - Institute of Electrical and Electronic Engineers
  - ❑IEEE 519 – Harmonic Limits. Certified under UL 1741
  - ❑IEEE 1547.1 – Inverters for grid connect. Certified under UL 1741

- ❑CARB DG003 Certifications

WESCO DISTRIBUTION

A microturbine produces two sources of energy: electricity and heat. While the electricity is used, the heat is typically unused and treated as waste (exhaust). Cogeneration technology allows this waste heat to be re-used in boilers with hot water systems (*CHP) or chilled water systems (**CCHP) through absorption chilling, saving a substantial amount of fuel along with enviornmental benefits

By producing both electrical and thermal energy at the same time, cogeneration technology produces more energy from a single fuel source. This process is the best technology for energy conservation.

RSP Systems

Reliable Secure Power

www.rsp-systems.com

Capstone Microturbines Generate Power & Heat

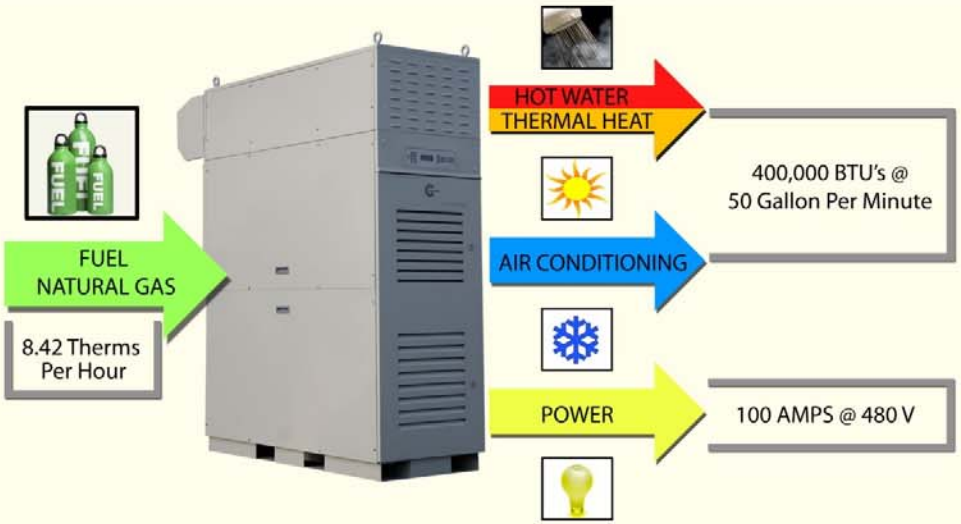

Thermal = 400,000 BTU's @ 50 Gallons Per Minute
Electrical = 100 AMPS @ 480 Volts

The Capstone Microturbine is a boiler that makes electricity!

RSP Systems : 10227 Avenue D, Brooklyn, N.Y. 11236 Phone: 718.272.4100 Fax: 718.257.6170

Capstone Technology

- Turbine elements
  - ✓ Turbo generator
  - ✓ Electronics
  - ✓ Advance Power Server
- Interconnection

Capstone C60s Operating in Brooklyn, NY

RSP Systems
Reliable Secure Power

Compact Turbo Generator

- Low emission design
  - ✓ Super-low NOX
  - ✓ CARB DG certified
- Low scheduled maintenance
  - ✓ Minor at 8,000 and 20,000 hours*
  - ✓ Major at 40,000 hours*

(* actual hours dependant on operating conditions)

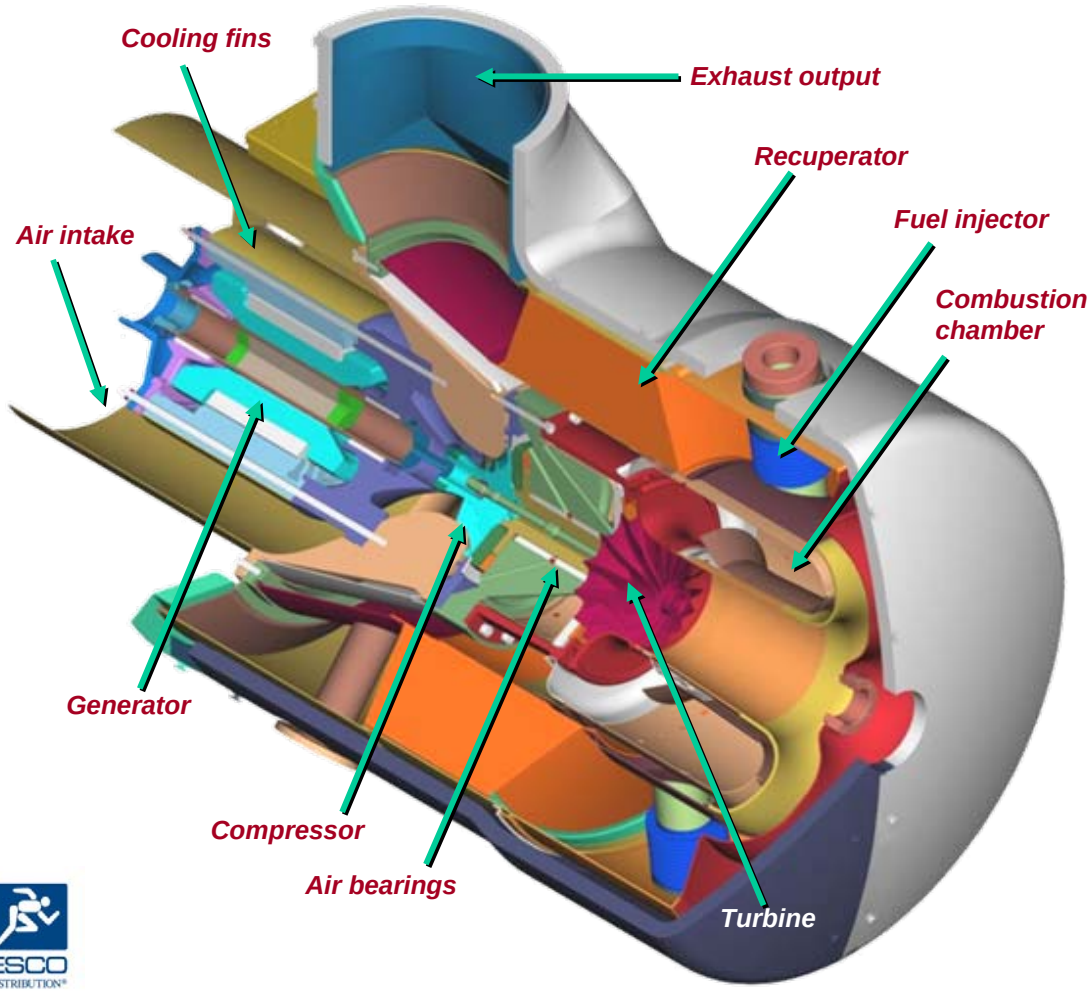

WESCO DISTRIBUTION

Unique Design

- One moving part: Turbo generator shaft

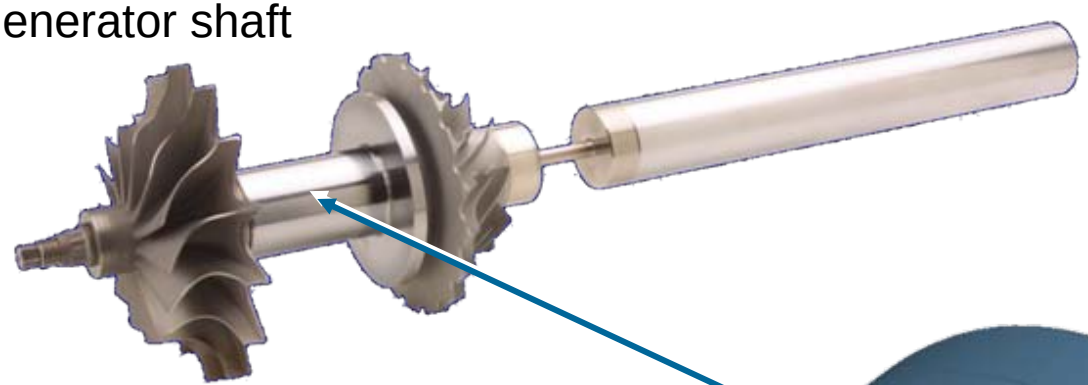

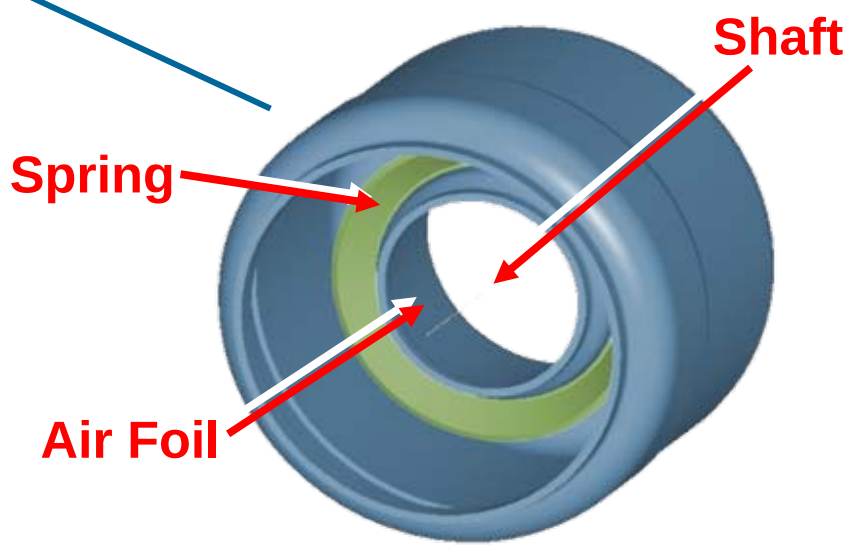

- Air bearings
  - ✓ No oil or lubricants, ever
- Air cooled
  - ✓ No anti-freeze or coolants, ever
- Proven reliability
  - ✓ >16 million hours of operation

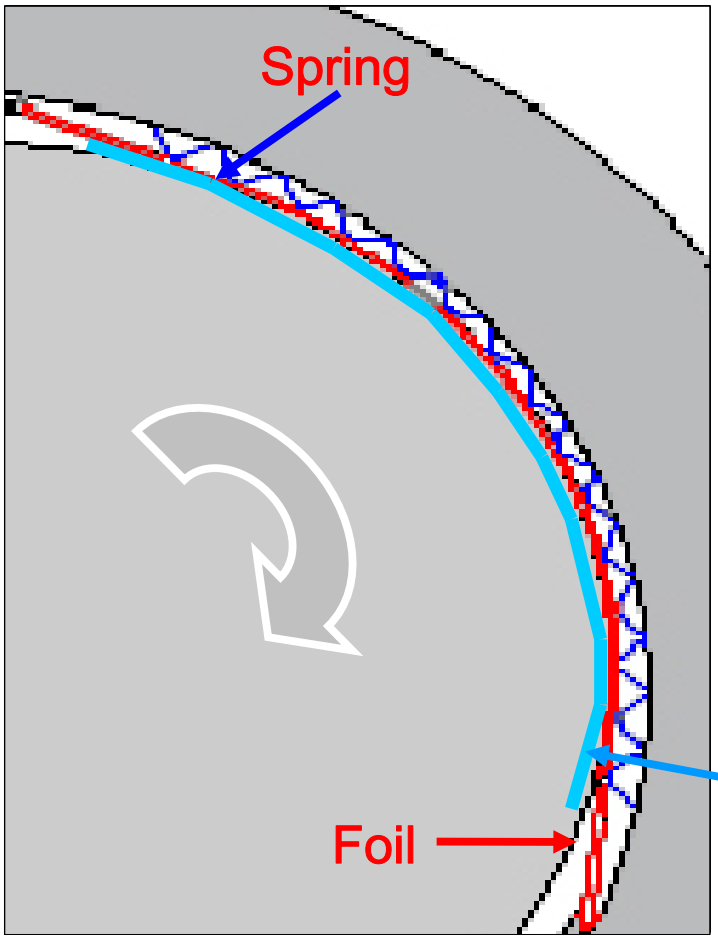

Air Bearings

When the shaft rotates at around 20,000 RPM,

a boundary layer of air will form between the foils and the shaft.

This layer of air will effectively lift the foils up and away from the shaft.

The springs provide counterforce to the foils and air, effectively keeping the shaft centered on it's cushion of air.

After lift-off there is no metal-metal contact in the bearing, hence no friction and no wear.

The only wear and tear occurs during starting and stopping the MicroTurbine.

Boundary Air

PROPRIETARY & CONFIDENTIAL: Capstone Turbine Corporation

RSP Systems
Reliable Secure Power

- No dump radiator required with heavy parasitic loss

- Capstones only parasitic loss is 3-4kw for fuel booster

WESCO DISTRIBUTION

Patented Electronics

- Patented “electronic” gearbox
- No moving parts!
- Variable voltage 300-500 volts
- Variable frequency 50-60 Hz
- Voltage & current source inverter
- Stand-alone capability
- Built-in fault protection

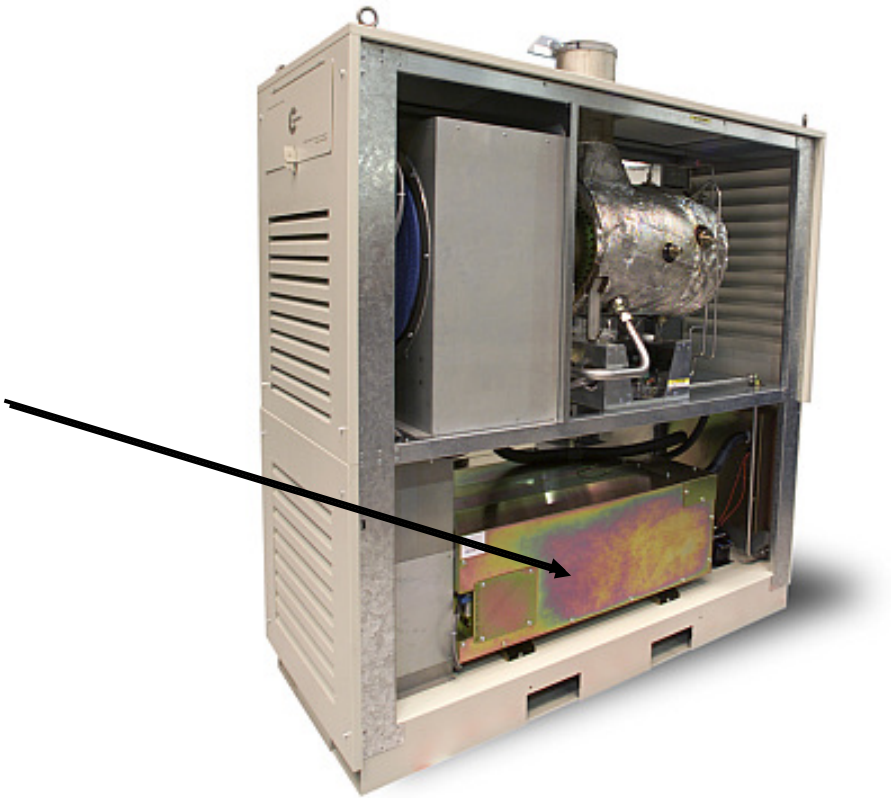

RSP Systems
Reliable Secure Power

4th-Generation Power Electronics & Controls

Modular, Compact, Robust and Cost Effective

Regulated DC Bus

Engine Control Module
- All digital DSP control
- Controls turbine operation
- Wide speed control range
- Sensorless generator control
- Small and lightweight
- Built in dynamic brake
- Built in system power supply
- Air cooled

Battery Control Module
- All digital DSP control
- Transient power control
- Bi-directional power control
- Manages battery charge/health
- Air cooled

Load Control Module
- All digital DSP control
- Built in neutral
- Built in protective relays
- Built in synchronization
- Built in paralleling capability
- Grid Connect or Stand Alone
- No transformer required
- 100 kVA rating
- Air cooled
- IEEE 519 compliant
- UL 1741 certified
- NY & CA state certified for direct-to-grid interconnection

WESCO DISTRIBUTION

RSP Systems
Reliable Secure Power

Advanced Power Server

Flexible Control of Capstone Microturbines using Proprietary Software and Industry Standard Hardware/Communications

PRODUCT DATA SHEET

Capstone

Advanced Power Server

Main Features and Capabilities

The Capstone Advanced Power Server (APS) is an extremely flexible system, able to:

- Automatically control operation of up to 30 microturbines
- Read data from power meters and other third party equipment
- Monitor and control balance of plant equipment
- Provide an internet gateway to the Capstone Service Network
- Communicate with local building management systems
- Interface with the Capstone Dual Mode Controller for fast transfer functions
- Allow manual control of individual microturbines

Advanced Power Server

C65/C30

Microturbine Control

The primary function of the APS is to act as a supervisory control point for Capstone microturbines. The software in the APS can be configured to accommodate a wide range of operating scenarios, letting you gain maximum value from your Capstone microturbine installation.

- **Grouping** – Microturbines can be set up in groups, each group having it's own control scheme for dispatching and operating. This allows complete flexibility to address the unique electrical and thermal load requirements of a given installation.
- **Dispatching** – Each group of microturbines can be set up to start and stop according to time of use schedules, automatic remote control inputs, or manual start/stop commands.

Microturbine Operating Modes	Grid Connect	Stand Alone
Electric Load Following	✔	✔
Thermal Load Following	✔	
Fixed Demand	✔	

This table shows the different operating modes available for each microturbine.

Group Operating Modes	Grid Connect	Stand Alone
Maximum Efficiency	✔	✔
Load Balancing	✔	✔
Power Setpoints	✔	

The power provided by each microturbine in a group can be automatically or manually adjusted, as summarized in this table.

WESCO DISTRIBUTION®

RSP Systems
Reliable Secure Power

APS Features & Benefits

Feature	Benefit
Automatically Control up to 30 Capstone microturbines	Reduce setup and commissioning time and increases system reliability
Read Data from third party equipment, like power meters	Provide cost-effective integration of all power-related equipment
Monitor & Control balance of plant equipment	Eliminate the cost and design effort for separate control equipment
Provide Internet Gateway to Capstone Service Network	Maximize system uptime and realize full microturbine economic value
Interface with Capstone Dual Mode Controller for fast transfer	Simplify site interconnection and reduce setup time
Allow Manual Control of individual microturbines	Provide flexibility to override automatic control when needed

WESCO DISTRIBUTION

RSP Systems
Reliable Secure Power

APS Microturbine Control

- Microturbine Operating Modes

Mode	Grid Connect	Stand Alone
Electric Load Following	✓	✓
Thermal Load Following	✓	
Fixed Demand	✓	

- Group Operating Modes

Mode	Grid Connect	Stand Alone
Maximum Efficiency	✓	✓
Load Balancing	✓	✓
Power Setpoints	✓	

Set Operating Modes to Fit Installation Needs

WESCO DISTRIBUTION

APS Balance of Plant

- Balance of Plant Control & Monitoring
  - ✓ APS includes a PLC for monitoring & control
  - ✓ Discrete I/O is Standard
    - 16 Discrete Inputs (24Vdc)
    - 7 Discrete Outputs (240Vac)
  - ✓ Two Card Slots for Optional I/O (analog & discrete)
  - ✓ Capstone will provide optional custom PLC software to meet site-specific monitoring and/or control requirements
  - ✓ Balance of Plant Monitoring using the Capstone Service Network requires optional custom screen programming

One Integrated Microturbine Power Solution

RSP Systems
Reliable Secure Power

APS Schematic

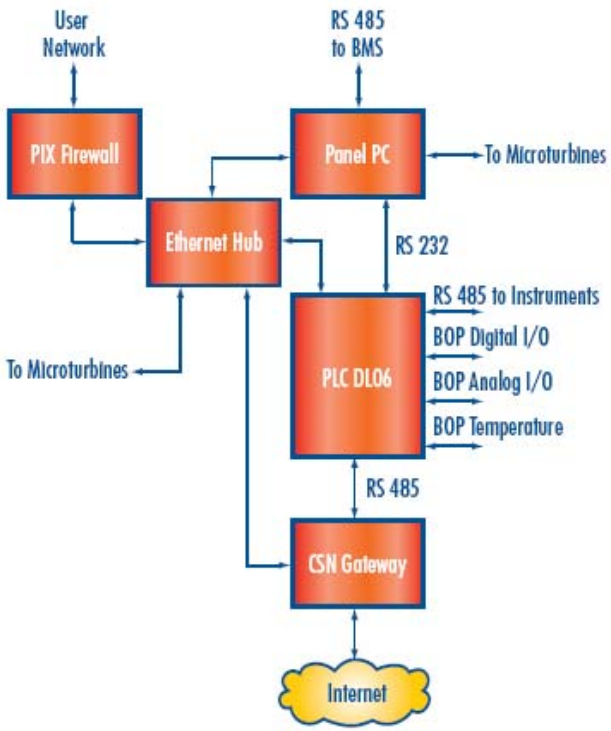

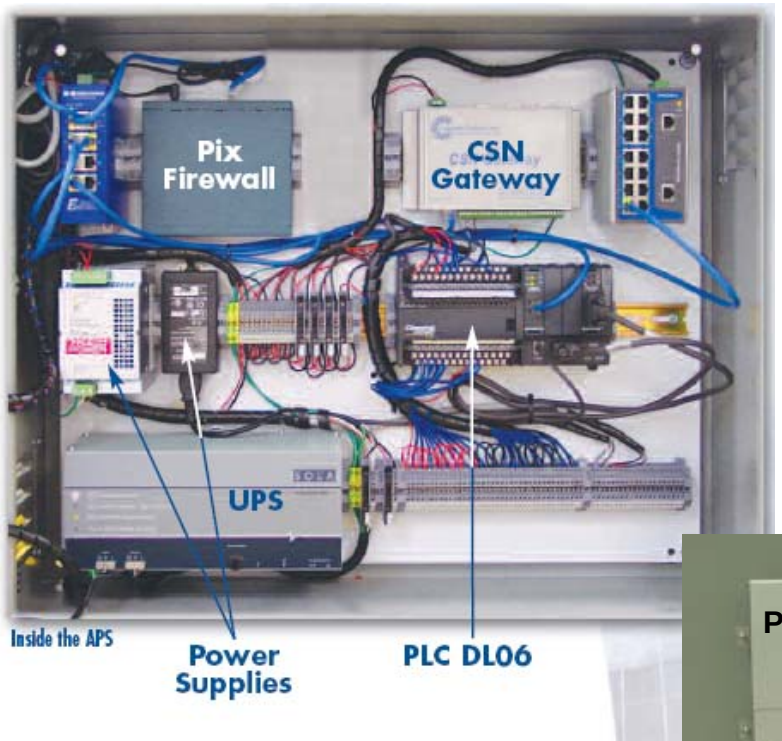

Industry Standard Building Blocks

WESCO DISTRIBUTION

Capstone Gas Pack

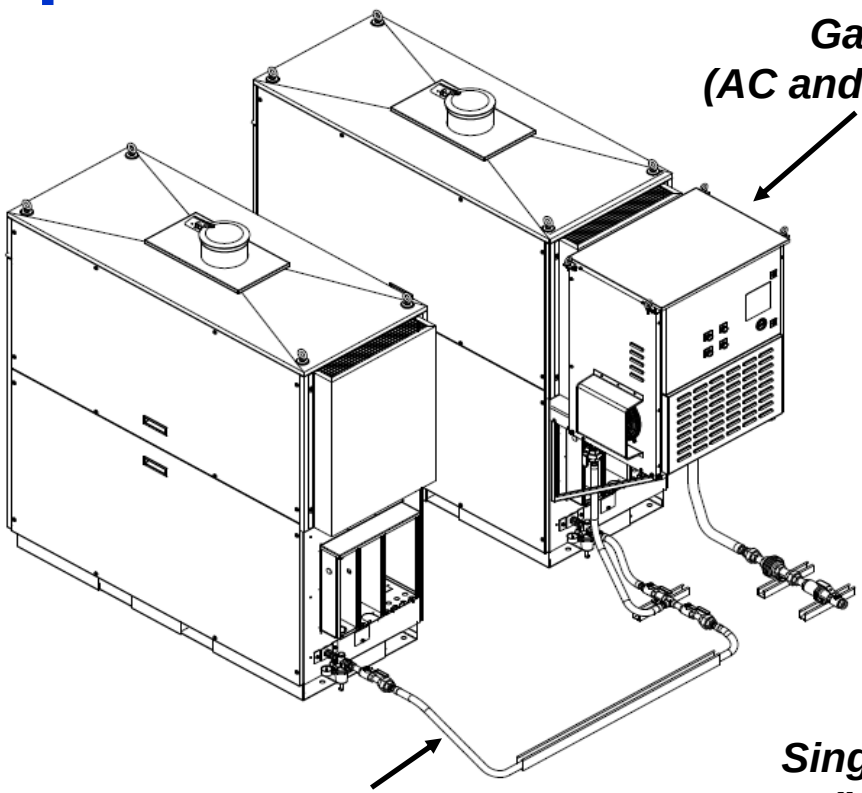

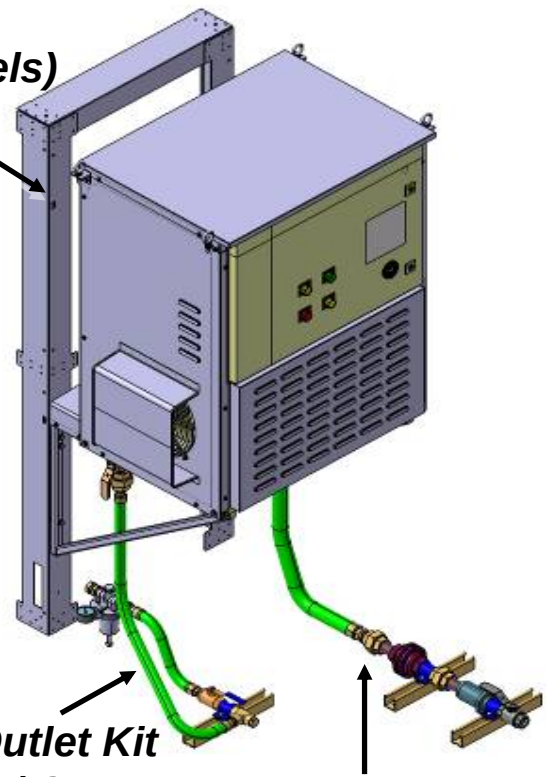

Gas Pack
(AC and DC Models)

Single Fuel Outlet Kit
(included w/ Gas Pack)

Fuel Inlet Kits
(optional)

Optional Second MT Fuel Outlet Kit,
(or use Existing Fuel Option Kit)

Interconnection Certification

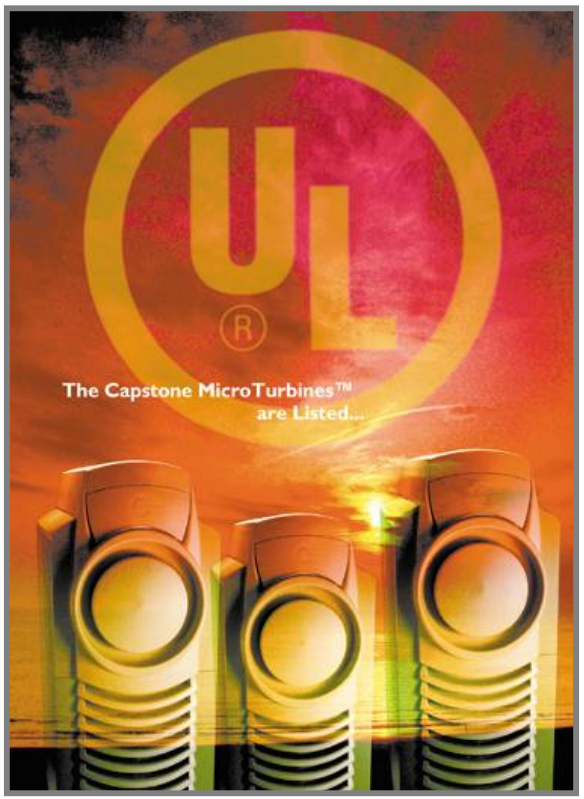

- UL 2200, the latest generator safety standard, UL 1741, the national grid interconnect standard, and UL approved for hazardous locations
- Capstone MicroTurbines were the first generators of ANY type state-approved by New York and by California (“Rule 21”) for direct-to-grid interconnection
- Also compliant with NFPA, IEEE519, CE, CSA and other internationally recognized safety standards

C65 Description

- Fuel capability
  - ✓ High-pressure natural gas
  - ✓ New landfill & digester gas models
- Power
  - ✓ 65kW
    - Grid Connect
    - Stand Alone
    - Dual Mode
- Efficiency
  - ✓ 29% electrical
  - ✓ 82% ICHP total efficiency
- Emissions
  - ✓ <5ppm NO_x @ 15% O_2
- Economics
  - ✓ Price & performance improves customer payback

High-Value Customers

- Need hot water for heat/domestic and chilled water for A/C
  - ✓ Health-care facilities
  - ✓ Hotels
  - ✓ Apartment buildings
  - ✓ Schools
  - ✓ Office buildings
  - ✓ Manufacturing facilities
  - ✓ Commercial laundries
  - ✓ Data centers
- High electric costs
  - ✓ >$8,000/month

RSP Systems

Reliable Secure Power

- Integrated hot water heat exchanger

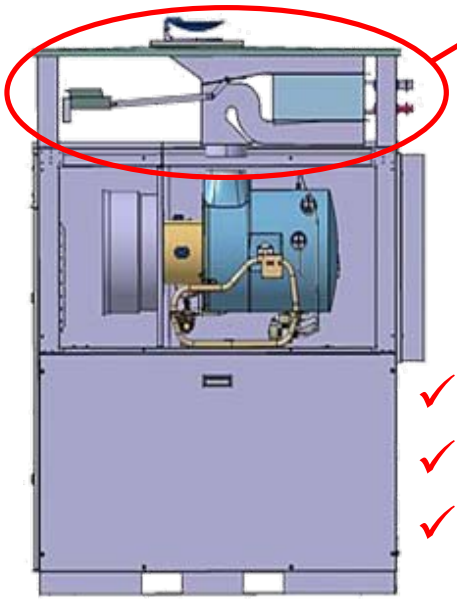

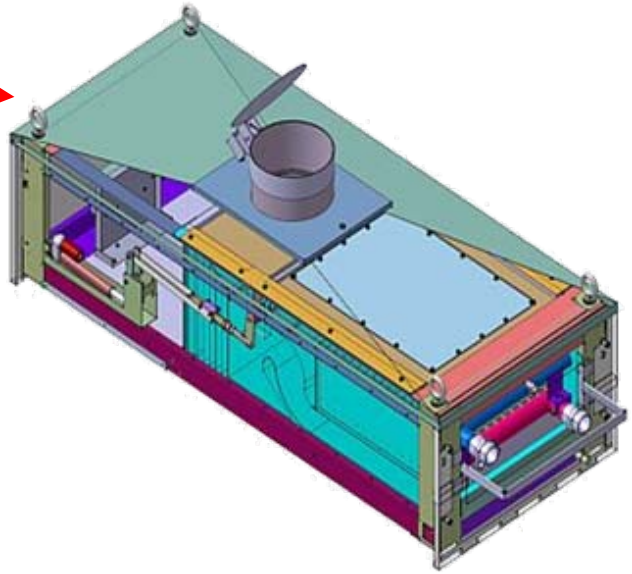

- ✓ Onsite generation
- ✓ Clean emissions
- ✓ High efficiency

WESCO DISTRIBUTION

RSP Systems
Reliable Secure Power

Integrates with Absorption Chillers

- Most chillers have a 20-year minimum life

ASTOR WINE & SPIRITS - MANHATTAN

WESCO DISTRIBUTION

RSP Systems
Reliable Secure Power

Capstone Microturbine CCHP Package

Exhaust Fired CCHP Package

- Multiple Microturbines.
- Complete Outdoor package with a Cooling tower, Cooling water pumps, and Chiller.
- Skid Mounted as one package.

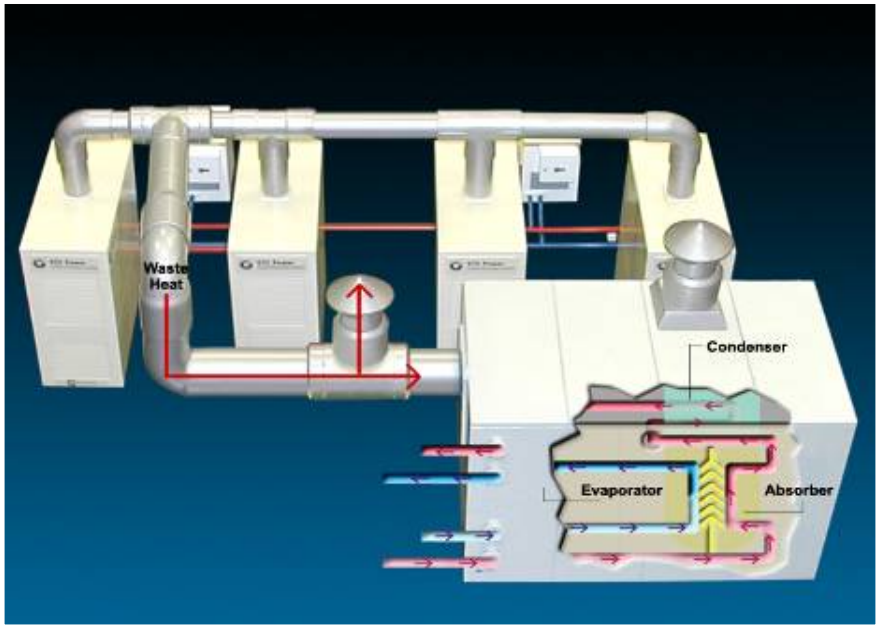

WESCO DISTRIBUTION

RSP Systems
Reliable Secure Power

Economics

Paying your power bill

is a waste of energy!

WESCO DISTRIBUTION

Economic Modeling

- RSP Systems and it's dealers can provide customized analysis of cost savings
- Data needed from customer
  - ✓ Type of application
  - ✓ Minimum of previous 12 months' utility bills
    - $8,000 minimum electric and 2,900 minimum therms per month
  - ✓ Hours of operation

RSP Systems
Reliable Secure Power

Less Fuel, Less Waste, Less Cost

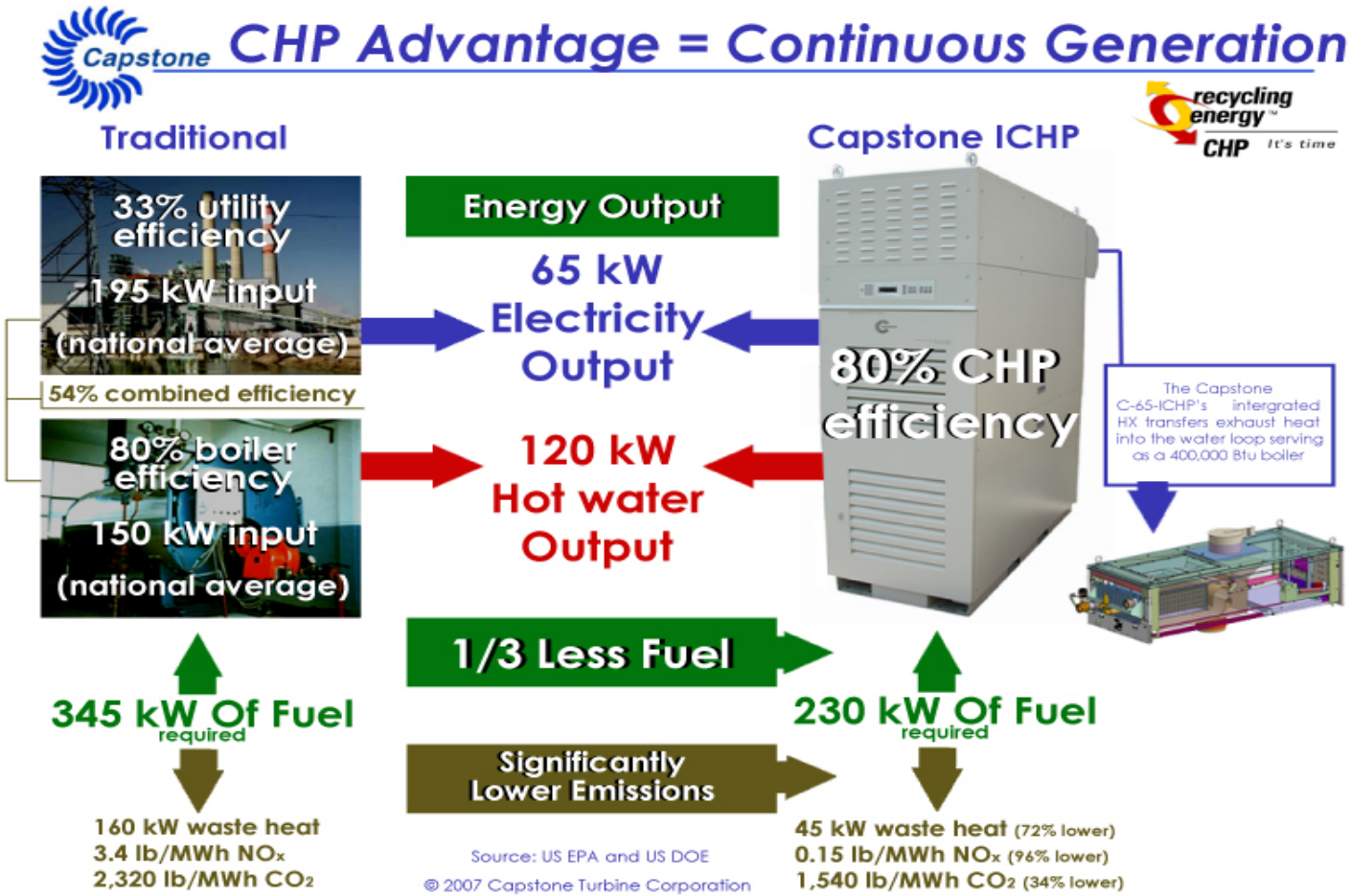

RSP Systems
Reliable Secure Power

Examples: Inns of America, Carlsbad

- C60 Dual Mode Microturbine
- Installed August 2002
- External heat recovery unit
- 40% total energy savings

"Cut our per room costs from $8 to less than $4. We wouldn't build a new hotel without it."
—Owner Dennis Harris

WESCO DISTRIBUTION

RSP Systems
Reliable Secure Power

Atrium Hotel, Irvine

Three C60-ICHPs

Capstone ICHP Heated Water for:

- ✓ Pool, laundry, kitchen, guestrooms
- ✓ Heating the building

180 kW SCE reduced demand/usage

"It just made sense. Our ROI will be within 1.5 years"
—GM Sheri Blackwood

WESCO DISTRIBUTION

RSP Systems
Reliable Secure Power

CCHP at Citibank, La Jolla

- 1 C60 + water-driven chiller
- Winter heating, summer A/C
- Commissioned April 2003
- Simple interconnection
- CARB DG: No air permit

Featured in Distributed Energy mag Sept/Oct '04

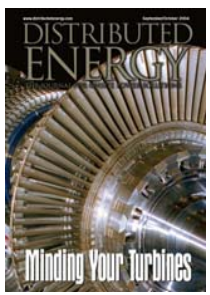

WESCO DISTRIBUTION

RSP Systems

Reliable Secure Power

Capstone

Convention Center in Ohio

4 C60 ICHP

$125,000 Annual Savings

SeaGate Centre: Toledo

The renowned SeaGate Centre in the heart of Toledo, Ohio, is host to a wide variety of concerts, sporting events, conventions and, most recently, a 240-kW array of four Capstone C60 ICHPs commissioned late last year.

When "the joint is jumpin'" the SeaGate Centre draws heavily on the grid. On off days, the cavernous facility uses much less. The Sea Gate Centre microturbines are anticipated to cut energy costs and consumption by up to $125,000 per year.

The four factory-integrated heat exchangers atop each microturbine serve as a variable efficiency boiler with a capacity of up to 1.5 million Btu. Since startup in November 2005, the SeaGate Centre has been able to heat the facility most days and nights using only the microturbine heat exchangers. That has allowed the center to completely turn off one of its two 8.6 million Btu boilers and run the other one at minimum firing rate.

Across town, two other sites use C60 ICHP microturbine arrays. The University of Toledo's Center for Visual Arts has two C60 ICHPs due to commission next month. And the adjacent Toledo Museum of Art has a four-unit array that has been running reliably for more than a year. A presentation on the museum array is scheduled to take place at the DOE's Microturbine Applications Workshop at 10:00 a.m. Wednesday, January 18, 2006. The museum's Plant Manager, Paul Bennett, is unable to attend; however, Dave Blair of RPP Energy Solutions, Ltd. will be making the presentation.

The SeaGate Centre's microturbines are scheduled for operation in combination with assets using a Capstone PowerServer. Between events, the microturbines are providing enough power and heat to maintain minimum building occupancy. The array's PowerServer has the capability to intelligently control the array and maximize fuel efficiency.

Comparing US EPA emissions test data on the Capstone C60 engine to that of US EPA test data on regional utility power plants, 90% of which are coal-fired, and low-NOx boilers, the microturbines generate each unit of energy with 97% lower NOx, half the greenhouse gas CO_2 emissions and an amazing 99.8% cut in acid rain-producing SO_2.

WESCO DISTRIBUTION®

RSP Systems

Reliable Secure Power

Capstone Food Processing Facility in New Jersey

5 C60's

Absorption Cooling

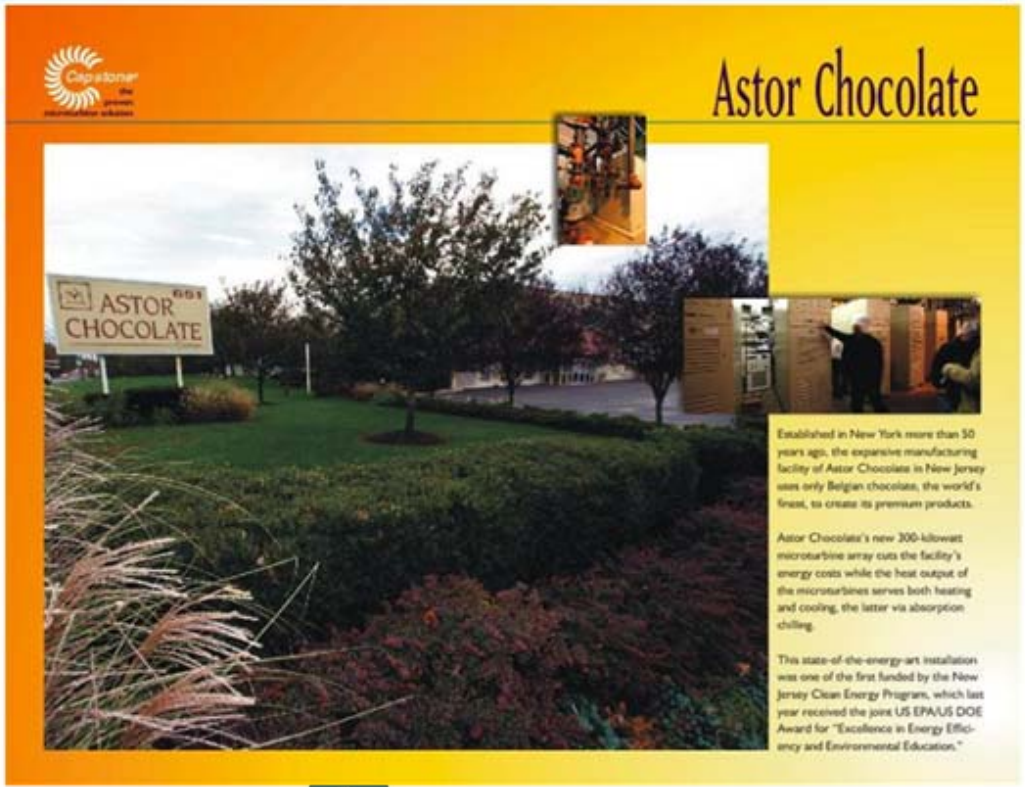

WESCO DISTRIBUTION®

RSP Systems
Reliable Secure Power

Capstone

Medical Facility in Oregon

5 C60
ICHP

LEED
Certification

Target
Platinum

Oregon Health & Science University

The Oregon Health & Science University's River Campus that is currently under construction in Portland is expected to be one of the Northwest's first buildings to achieve the Platinum LEED U.S. Green Building Council rating – the very highest level attainable.

EC Power worked with Siemens and Interface Engineering on the installation of an array of five Capstone C60 ICHPs to serve as one of the most significant parts of the energy efficiency portion of LEED rating system.

The 200-kilowatt microturbine cogeneration system was just commissioned in January. The OHSU building is expected to be completed shortly.

Rendering courtesy of GBD Architects Inc.

WESCO DISTRIBUTION®

RSP Systems
Reliable Secure Power

Microturbine Tax Credit

- 10% tax credit up to $200/kW
- Any Capstone models or application
  - ✓ Array <2 MW, electrical efficiency >26%
  - ✓ CHP, biogas, or power only (CHP not required)
- Applicable deductible costs include
  - ✓ The microturbine system
  - ✓ Balance of plant to convert fuel into electricity and/or thermal energy
  - ✓ Any components located between existing fuel and power distribution infrastructure
- Extended through 2016

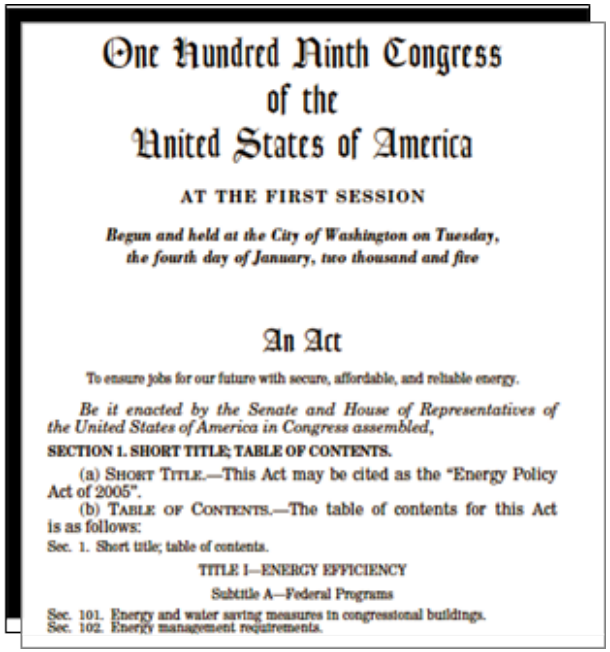

One Hundred Ninth Congress
of the
United States of America

AT THE FIRST SESSION

Begun and held at the City of Washington on Tuesday, the fourth day of January, two thousand and five

An Act

To ensure jobs for our future with secure, affordable, and reliable energy.

Be it enacted by the Senate and House of Representatives of the United States of America in Congress assembled,

SECTION 1. SHORT TITLE; TABLE OF CONTENTS.

(a) SHORT TITLE.—This Act may be cited as the "Energy Policy Act of 2005".

(b) TABLE OF CONTENTS.—The table of contents for this Act is as follows:

Sec. 1. Short title; table of contents.

TITLE I—ENERGY EFFICIENCY

Subtitle A—Federal Programs

Sec. 101. Energy and water saving measures in congressional buildings.
Sec. 102. Energy management requirements.

Department of the Treasury
Internal Revenue Service

The credit is not available to public utilities other than telecom companies. Project costs that are paid for out of federal, state or local programs are not eligible costs for the purposes of the microturbine tax credit.

WESCO DISTRIBUTION

RSP Systems
Reliable Secure Power

Value Proposition

- Generate energy where it is used
  - ✓ With emissions and costs lower than utilities'
  - ✓ Fast & easy installation & operation
- Boost capacity w/o utility costs/delays
- Ensure power certainty and security
- Gives end-users energy cost control
- Maximizes fuel efficiency via CHP/CCHP

WESCO DISTRIBUTION

Product Enhancements

- C65 fast transfer (3-6 sec)
- Elevator package

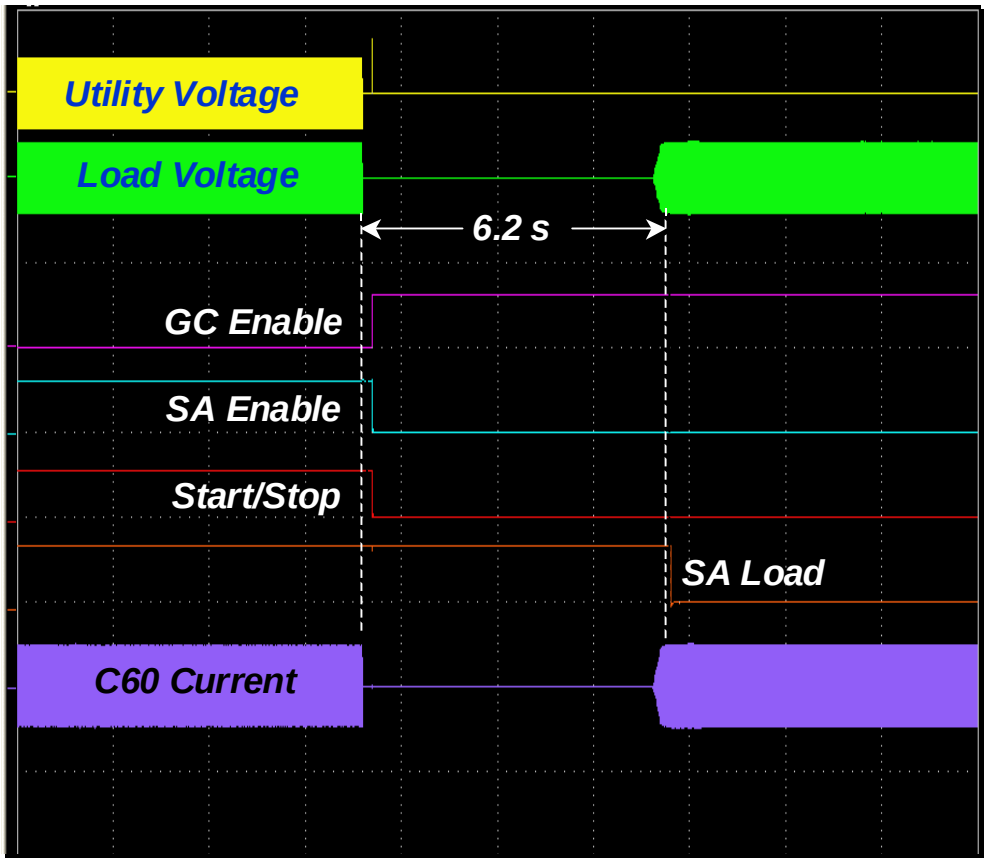

Fast Transfer Example Test

Fuel Flexibility

- Three fuel designations:
  - ✓ H = natural gas
  - ✓ A = landfill gas
  - ✓ B = digester gas

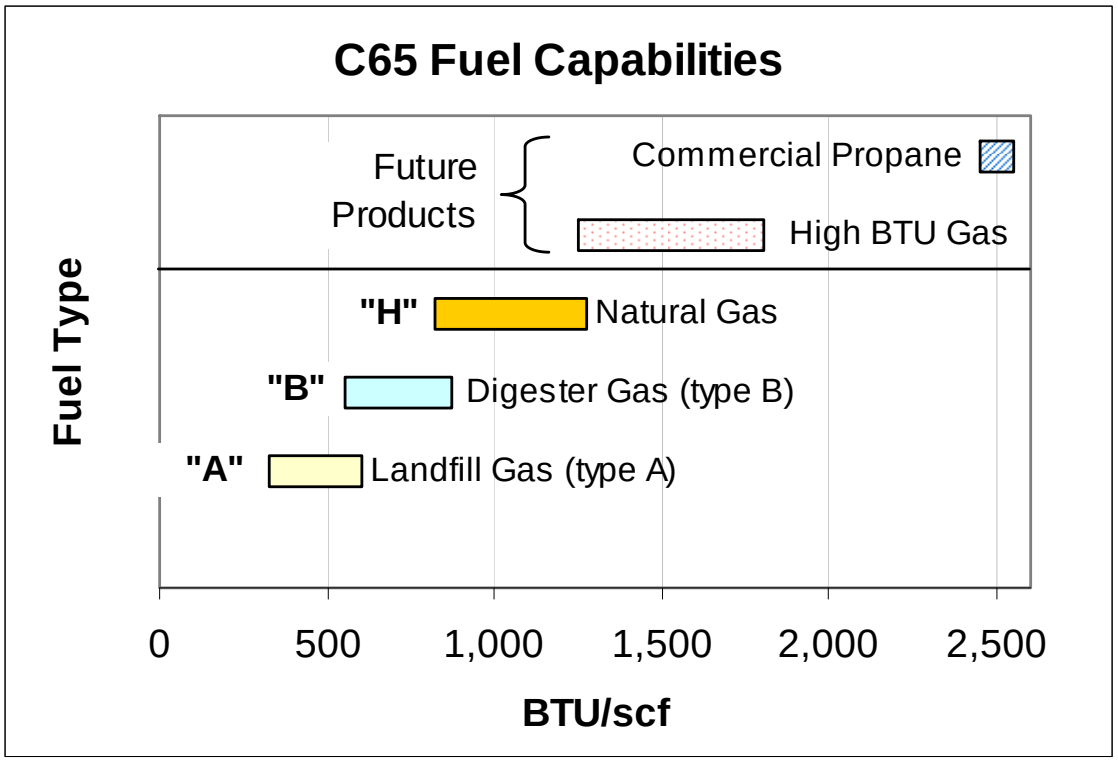

Clean

The Capstone MicroTurbine has lower emissions than utility power plants in every region of the USA

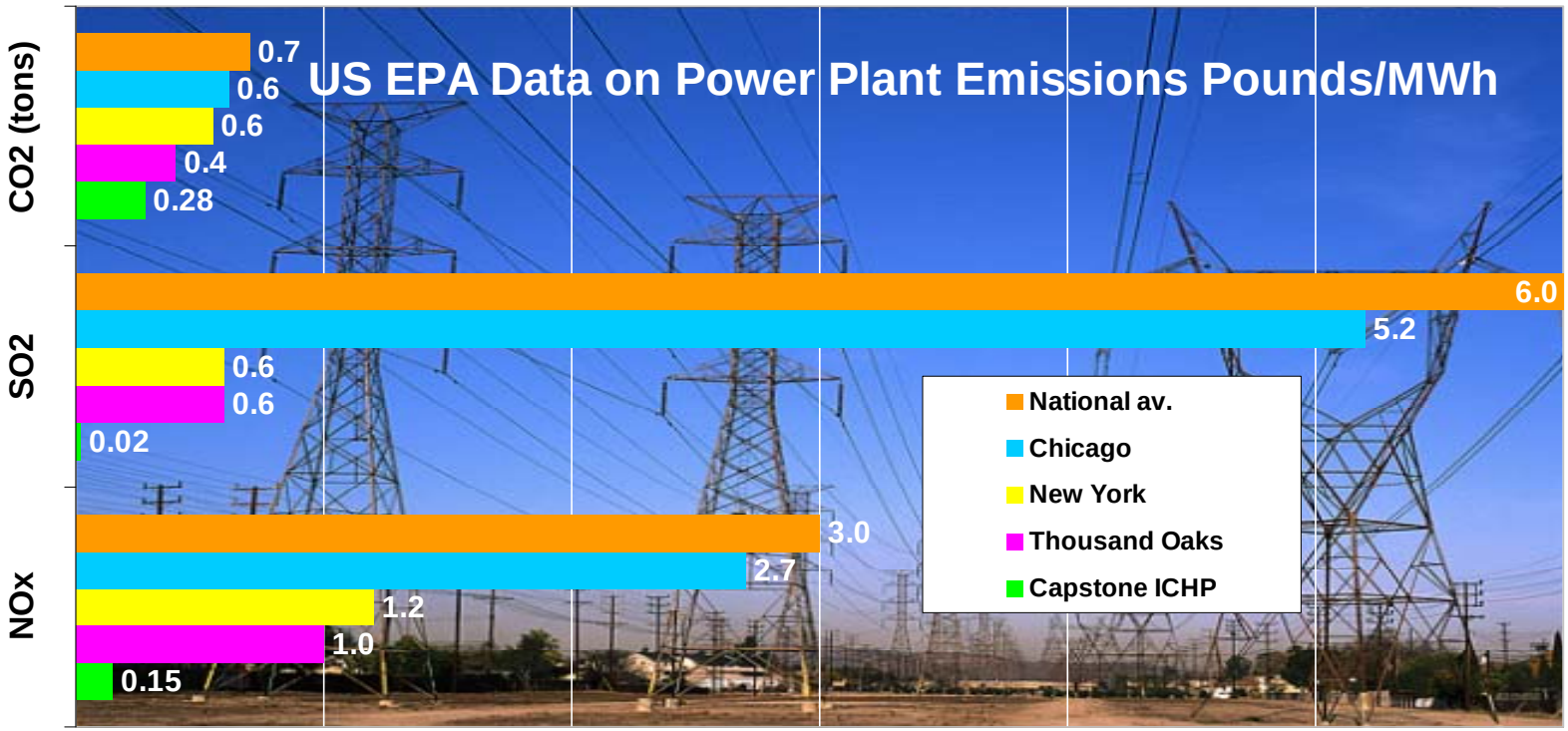

Source: EPA Report on Capstone C60 & EPA Power Profiler: www.epa.gov/etv/pdfs/vrvs/03_vr_capstone60.pdf & www.epa.gov/cleanenergy/powerprofiler.htm

RSP Systems
Reliable Secure Power

The Technology to Make it Work

- Automatic operation, end-user transparent
- Rapid deployment & precertified permitting
- Simple Direct2Grid™ interconnnection
- Built-in scalability from a few kW to a MW+
- Remote monitoring & diagnostics
- Infrequent minor scheduled maintenance
- Near-zero emissions w/o exhaust treatment
- No fluids or other hazardous materials
- Prime power configs minimize UPS storage needs and footprint; use grid as backup

Capstone C60 heats water loop for heating & absorption chilling at a Citibank building near San Diego

WESCO DISTRIBUTION

Green Buildings & Microturbines

- Capstone Microturbines can help green buildings earn more than a dozen LEED points
  - ✓ Up to 10 points for Energy & Atmosphere Credit 1
  - ✓ 1 point for exhaust-driven absorber
  - ✓ Up to 4 points if biogas-fueled

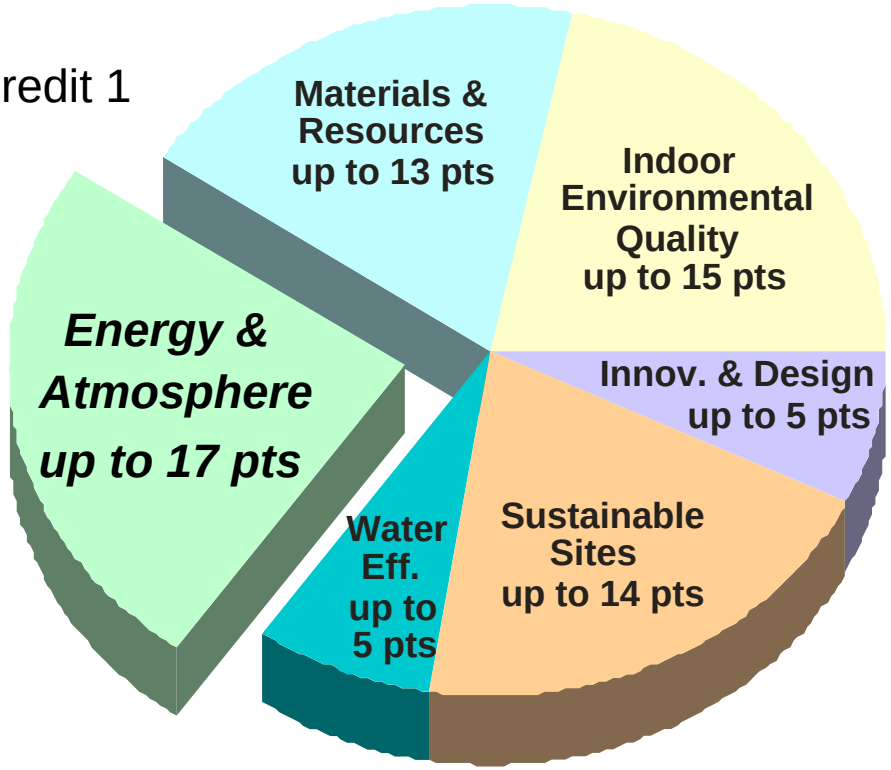

LEED

Leadership in Energy and Environmental Design

RSP Systems
Reliable Secure Power

Capstone Government Sales

- GSA approved
- City, State and Federal governmental facilities
- Special pricing

GSA U.S. General Services Administration

WESCO DISTRIBUTION

RSP Systems Support

- Sales and service in Brooklyn
  - ✓ Products and parts warehouse
  - ✓ Applications engineering
- OEM RSP/Capstone factory service
  - ✓ Remote monitoring

RSP Systems Service Network

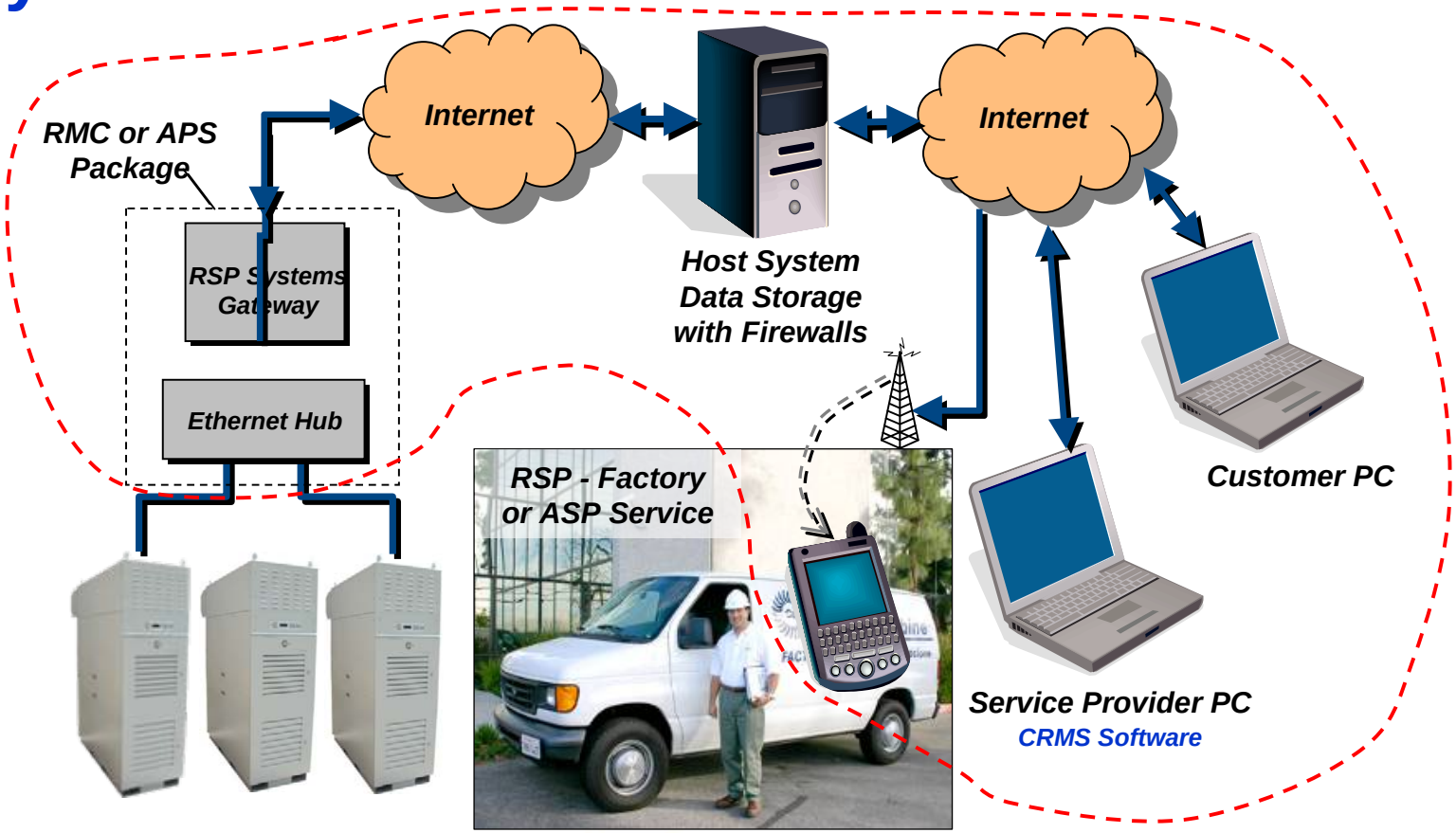

See Your System from Anywhere & Expedite Service

RSP Systems
Reliable Secure Power

Contact Info:

Questions & Answers

- **Bruce Beckwith**
  bruceb@cogenNYC.com

- **Cory Glick**
  coryg@cogenNYC.com

- **Gary Blankoph**
  garyb@cogenNYC.com

718.272.4100

WESCO DISTRIBUTION