NEW YORK CITY DEPARTMENT OF
DESIGN + CONSTRUCTION
Division of Infrastructure
Bureau of Construction

STANDARD CONSTRUCTION OPERATING PROCEDURE

SCOP…….. : 06 -001W

CATEGORY.. : CONSTRUCTION
Subcategory : WATER MAINS

Keywords …… : Water Mains
Disinfection, Activation

Supersedes……. : N/A
Supplements….. : 04-015G
Sheet……..... : 1 of 15

Issue Date…… : February 13, 2006

SUBJECT: PROTOCOL FOR DISINFECTING & ACTIVATING TRUNK WATER MAINS & APPURTENANCES

APPROVED: ORIGINAL SIGNED BY
Assistant Commissioner - Richard Zetterlund, P.E.

Attached please find the procedures for proper disinfection of Trunk Water Mains and Appurtenances that have been out of service and/or open to the elements. The project's Resident Engineer must discuss the disinfection techniques at the critical phase meetings and ensure that the attached protocols are strictly followed.

Attachments: Protocol for Disinfecting and Activating Trunk Water Mains & App., Sample Disinfection Plans

Protocol for Disinfecting & Activating Trunk Water Mains & Appurtenances

Prior to activating a new trunk water main and/or an existing section of trunk water main that has been out of service and/or open to the elements for an extended period, it is necessary to disinfect the main. The disinfecting process includes the following:

1) Washing and hosing down the interior of the trunk water main to remove debris, dirt or mud that was tracked into it during construction. Pressure washing is acceptable as long as the water used can be collected and pumped out or discharged through a blowoff.

2) After the interior has been washed clean, the trunk main is secured by bolting up and sealing all manways and openings and shutting all valves. Contact the appropriate Distribution Engineer from DEP to conduct a joint inspection of the trunk water main's new appurtenances (valve chambers, regulator valve chambers, access manholes, outlet valve manholes, aircocks and blowoffs). Have the deficiencies corrected.

3) The Resident Engineer and the Engineer-in-Charge must develop a Disinfection Plan. A meeting must be held with DEP's Distribution Engineer and DDC's trunk water main shutdown coordinator to review the plan. The DEP Distribution Engineer will review the feasibility of the proposed valve operations to ensure that chlorinated water does not enter the active distribution system. A secondary purpose for this meeting is to alert DEP of the upcoming activation and enlist their assistance in operating appurtenances located outside the project's limits. The plan should include:

    a) A detailed sketch of the main to be activated showing all new and existing appurtenances (i.e. access manholes, blind blowoffs, connected blowoffs, mainline & connection valves, outlet valves and aircocks), cross streets, the size & length of the water main to be activated. An In-Service Sheet Sketch can be used provided all the aforementioned data is included.

    b) Computations for the amount of calcium hypochlorite (powder) or sodium hypochlorite (liquid bleach of varying strengths) required to produce a minimum 10 PPM chlorine residual after 24 hours of contact-time.

    c) Outline the method to introduce and disperse the sanitizing agent evenly throughout the pipeline. Calcium hypochlorite powder should not be divided into equal parts and dumped into access manholes throughout the pipe run. It does not dissolve instantly and the high concentration of an oxidizing agent sitting on any type of pipe lining can damage it. The powder should be continuously mixed in a drum with water and discharge into the pipe through a hose as the pipe is being filled with water. Depending on the pipeline's geometry, the entire sanitizing agent can be introduced at one point or it may require it to be introduced at several locations.

    d) After 24 hours of contact-time, the minimum chlorine residual of 10 PPM must be confirmed before the flushing operation can begin. If the chlorine residual is below 10 PPM, additional sanitizing agent will need to be added and levels checked after the expiration of another 24-hour period.

    e) Outline the method to purge the main of the hyper-chlorinated water and to exchange the water in the main at least two times. Depending on the pipeline's geometry it may not be possible to purge the main completely. The pipeline residual water may need to be pumped to drain it completely, refilled and flushed to exchange the water a single time.

f) Once the disinfection time and concentration has been achieved, the chlorinated water should be discharged into a sanitary or combined sewer system. The discharge should be coordinated with DEP sewers and wastewater treatment operations. Discharge points located in the vicinity (less than one (1) mile) of a wastewater treatment plant are more of a concern. Please consult NYCDEP's Environmental, Health and Safety Policy and Procedures – Volume IV, Stormwater and Wastewater Management (copy is available) for additional information.

g) A good indicator that the water main has been thoroughly flushed is all sampling sources are producing chlorine residuals and water temperatures that are equal to the feed. Samples should be taken at this time.

h) It is good practice to continuously flush the main while waiting for sample results if possible. This keeps the water fresh preventing stagnation. Positive test results for biological contaminants are not usually encountered. If this is the case, the entire disinfection process needs to be performed again. A high pH sample result is typically caused by a lack of flushing. New samples will be required to be taken after the main is flushed again. High pH can be caused the water's initial reaction with the cement mortar lining and remaining byproducts of the sanitizing agent. Continuously flushing the main, allows a new sample to be collected without delay.

i) Promptly inform the Distribution Engineer that the samples have passed so the main can be activated to prevent any contained water from stagnating.

SE-552C/
Location: Springfield Blvd. Between South Conduit Avenue and Carson Street

Disinfection Plan

Existing Pipe Connection:
The existing 48-inch ductile iron pipe with ACIPCO LOK-Ring joints was installed in 1994 inside an existing 60-inch steel water main that originally served the City of Brooklyn at the turn of the century. The connection work was limited to the removal of a plug located on the branch of a 48x36 3W with LOK-Ring bells and the installation of a LOK-Ring spigot x FL adapter, a short piece of FL x FL steel with a bypass outlet, a 6-inch bypass valve and a 36-inch butterfly valve. The required shutdown was of a short duration. Water passing through the aforementioned bypass valve will be used to sanitize and flush the new 48-inch steel trunk water main.

New Steel Main Description:
The new steel trunk main begins at the aforementioned 48x36 3W and proceeds north parallel to and just east of the Springfield Blvd. overpass increasing in size to 48-inch steel pipe just before passing beneath the Belt Parkway in a 60-inch GFR HOBAS casing pipe. The main offsets west into the southbound traffic lanes of Springfield Blvd as it passes through the South Conduit Avenue intersection and proceeds north to Carson Street. The road profile is relatively flat. The area contains shallow storm and sanitary sewers. The main offsets vertically beneath sewers in 144th Ave., 143rd Rd., 140th Ave. and 139th Ave. Blowofffs are located at 143rd Rd., Edgewood Ave., 140th Ave. and 138th Rd. and are blind. Aircocks are located: just south of South Conduit Ave. in the north shoulder of the Belt Parkway, at 143rd Rd., at 142nd Rd., at 141st Rd., at 140th Ave., at 139th Ave., at 138th Rd. and at Eastgate Plaza. A main line 48-inch valve is located just south of 138th Rd.

Sanitizing Agent Calculation:
The specification requires a 24-hour contact-time with a minimum concentration of 10 PPM of chloride to disinfect the main. This means at least 10 PPM of chloride must be detected at various sampling points along the main after 24-hours. Therefore, the quantity of sanitizing agent introduced must exceed an initial concentration of 10 PPM to meet the contact-time requirement as some of the agent is consumed during the disinfection process. Typically, the minimum concentration is doubled (20 PPM) to determine the quantity of sanitizing agent to be introduced.

Agent: 65% Sodium Hypochlorite Powder (Pool Chlorine)

Volume of Water = π (4 ft)^2/4 x (4,030 ft*) * Use 48-inch for small sections of 36-inch pipe.
= 50,643 CF

Weight of Water = 54,601 CF x 62.5 LBS/CF
= 3,165,188 LBS

Weight of Chloride (to achieve 20 PPM solution) = 3,412,563 LBS x 20/1,000,000
= 63.3 LBS

Weight of 65% Sodium Hypochlorite Powder = 63.3 LBS / 0.65
= 97.4 LBS
SAY – 100 LBS plus

Procedure:

FILLING AND INTRODUCING SANITIZING AGENT TO THE MAIN

1. Open Aircocks NAC#1 thru 8. Open NVALVE#2.

2. Mix 10 LBS of sodium hypochlorite powder with about 100 gallons of clean water and pour into the AMH located in the 36-inch valve connection chamber located in the south shoulder of the Belt Parkway just east of Springfield Blvd. Seal the AMH cover and leave the 2-inch tap open.

3. Setup the chlorination station by the AMH located in the north shoulder of the Belt Parkway just east of Springfield Blvd.

4. Open the bypass on NVALVE#1. Monitor the previously opened 2-inch tap until water begins to flow out and close it. (This section of main is lower than the highpoint located on the opposite side of the Belt Parkway and will fill completely before water is detected at the upstream AMH).

5. Once water is detected at the AMH where the chlorination setup is located, begin introducing sanitizing agent mixed in a drum with clean water.

6. Shut each aircock once the sanitizing agent is detected (this may not occur in any specific order as the new main has several high and low points).

7. Based on the pipe's geometry, roughly 60 LBS of the sanitizing should be introduced when the water level in the pipe is halfway as viewed in the AMH. An additional 15 LBS should be introduced gradually before when the water level in the pipe is at three quarters. The remaining 15 LBS should be introduced gradually before the pipe is filled. Seal the AMH shut and bleed out the air through the 2-inch tap. Once water flows out of the tap shut it.

8. Setup a 2-inch hose on the AMH tap at Carson Street. Open the tap and release the air from the main. Once a steady flow of water and sanitizing agent is achieved -- close the tap.

9. The main has many high and low-points that could shift air around at various stages of being filled. This step will remove most of the trapped air in the main. Starting with NAC#8 and working south to NAC#1, open each aircock a few turns to release any trapped air. Once a steady flow of steady flow of water and sanitizing agent is achieved at the aircock -- shut the hydrant and proceed to the next aircock.

DRAINING THE MAIN

1. After 24 hours, samples should be taken at NAC#1, NAC#2, NAC#4 and NAC#8 to determine if the residual maintained in the pipe exceeded 10 PPM using a "high end" chloride detection kit. It is unlikely that a 10 PPM residual would be obtained at NAC#1 as clean water will have carried away most of the sanitizing agent downstream.

2. If OK, proceed with draining the main. (This new section of trunk water main has blind blowoffs only. It is not feasible to flush all the chlorinated water out of the aircocks due to safety concerns. NYSDEC prohibits the disposal of large amounts chlorinated water into a storm water system. If untreated it could damage an ecosystem.)

3. Shut the bypass on NVALVE#1 and open all the aircocks.

4. Setup two high capacity 4 or 6-inch pumps at the blowoff pot manholes of NBO# 2 and NBO#4. Open the two blowoff valves and begin pumping. (The chlorinated water must be discharged into the sanitary sewer system manholes.)

5. According to the pipe's geometry, NBO#4 should drain completely first. When no flow is detected at NBO#4 shut the blowoff valve and move the pumping operation to NBO#3.

6. Repeat the drainage process at NBO#3 and then move the pumping operation to NBO#1. Repeat the drainage process at NBO#1.

7. Once no flow is detected at NBO#1 & NBO#2. Shut both valves. The main has been drained sufficiently to begin refilling and flushing operations. (Please note that the vertical offsets and the crossing beneath the Belt Parkway will still be filled with chlorinated water. The refilling and flushing operation will rid the system of this remaining chlorinated water. If the main is empty overnight, shut all the aircocks and reopen them before starting to refill the main.)

REFILLING THE MAIN

1. Open the bypass on NVALVE#1.

2. Allow the aircocks to flush for a few minutes after stable flow is achieved before closing. This may not occur in any specific order as the new main has several high and low points.

3. Setup a 2-inch hose on the AMH tap at Carson Street. Open the tap and release the air from the main. Once a steady flow of water is achieved -- close the tap.

4. The main has many high and low-points that could shift air around at various stages of being filled. This step will remove most of the trapped air in the main. Starting with NAC#8 and working south to NAC#1, open each aircock a few turns to release any trapped air. Once a steady flow of steady flow of water is achieved at the aircock -- shut the hydrant. Proceed to the next aircock and repeat the process.

FLUSHING THE MAIN

This is a timed and controlled flushing sequence utilizing hydrants to establish a fairly accurate flow rates (see attached "Hydrant Flow Chart"). The attached "Hydrant Flushing Schedule" determines the amount of time each aircock/hydrant needs to be opened by determining the volume of water between each aircock and dividing by a cumulative flow rate of all the hydrants located downstream from that section of pipe. The "Hydrant Flushing Schedule" provides a column to write a start time and determine the time to shut each hydrant.

1. Open and flush EAC#1 for about 15 minutes. Test for and record the chlorine residual in the water. Take and record the water's temperature. (These reading will be used for comparative purposes when the hydrants are tested prior to closing.)

2. Setup a 2-inch hose on the AMH tap at Carson Street. The discharge end of the hose can drain into a catch basin during this phase of the disinfection process. Open the tap.

3. Following the directions outlined in the "Hydrant Flow Chart", establish a flow rate at NAC#8 with an L=5'-0" through its 4-inch nozzle (the 2½-inch nozzle must be closed when setting the flow rate). Open the 2½-inch nozzle after the flow rate has been set. This will shorten the length of the water stream extending into the street. Repeat the process with NAC#7 thru NAC#1 proceeding upstream. (Note that NAC#2 was excluded from the "Hydrant Flushing Schedule" due to its proximity to Springfield High School's main entrance.)

4. After establishing the flow rate at NAC#1 record the time in "Time Schedule" column by the Start Label in the "Hydrant Flushing Schedule". Compute the time to shut each hydrant and record it in the "Time Schedule" column.

5. When time to close NAC#1 is reached, check the chlorine residual and water temperature. If they

match the earlier test results collected at EAC#1, shut the hydrant and proceed to the next open downstream hydrant to repeat this step. If the test results don't match (the chlorine residual will likely be high), keep flushing and retest the water every five minutes until the results match the test results collected at EAC#1. Shut the hydrant once the test results match and proceed to the next open downstream hydrant to repeat this step.

6. After the allotted time for flushing the AMH tap at Carson Street has expired, check the chlorine residual and water temperature. If they match the earlier test results collected at EAC#1, shut the tap. The flushing operation has been completed. If the test results don't match (the chlorine residual will likely be high), keep flushing and retest the water every fifteen minutes until the results match the test results collected at EAC#1. Shut the tap once the test results match. The flushing operation has been completed. Since there are no connected blowoff pots, the main cannot be continuously flushed while waiting for test results without manning the operation.

SAMPLING THE MAIN

1. Collect ASAP after the flushing process has been completed. The water is freshest at this point and will degrade slowly until it begins to circulate when put in service. Please note that the water temperature and chlorine residual have been monitored throughout the flushing process and match the feed results.

2. Flush each hydrant for about five minutes before collecting samples. Proceed with collecting samples for testing at DEP's laboratory. Collect two feed samples at EAC#1 (Feed); collect one sample at NAC#4 (Sample) and another at NAC#8 (Sample).

3. Call DEP's laboratory for test results daily. If the samples pass, immediately notify DEP to put the main into service.

SUBJECT	SHEET	BY	DATE	JOB NO.
DISINFECTION PLAN SKETCH	1/3	KS	—	SE-552C

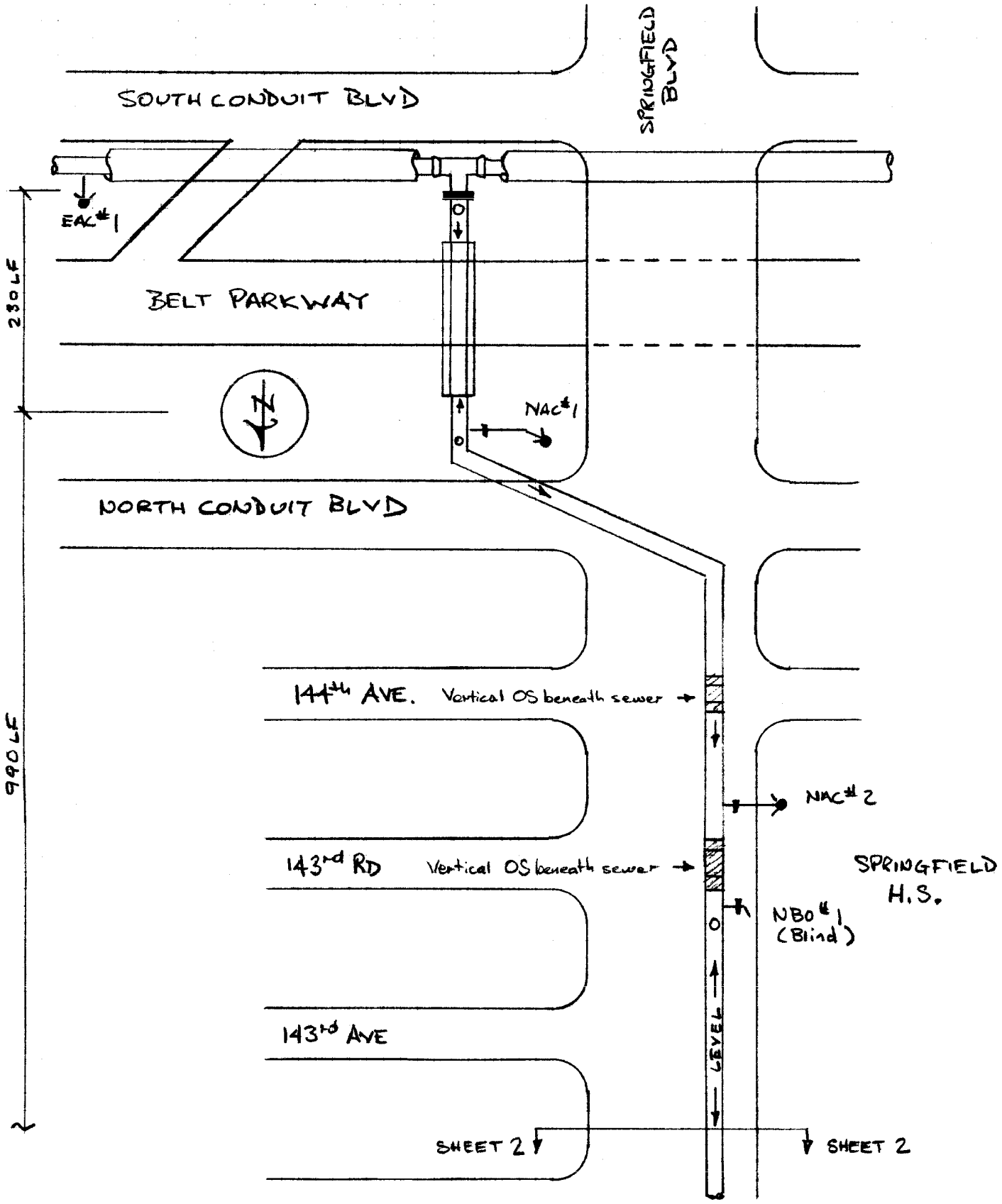

DDC99-1-313

SUBJECT	SHEET	BY	DATE	JOB NO.
DISINFECTION PLAN SKETCH	2/3	WS	—	SE-552C

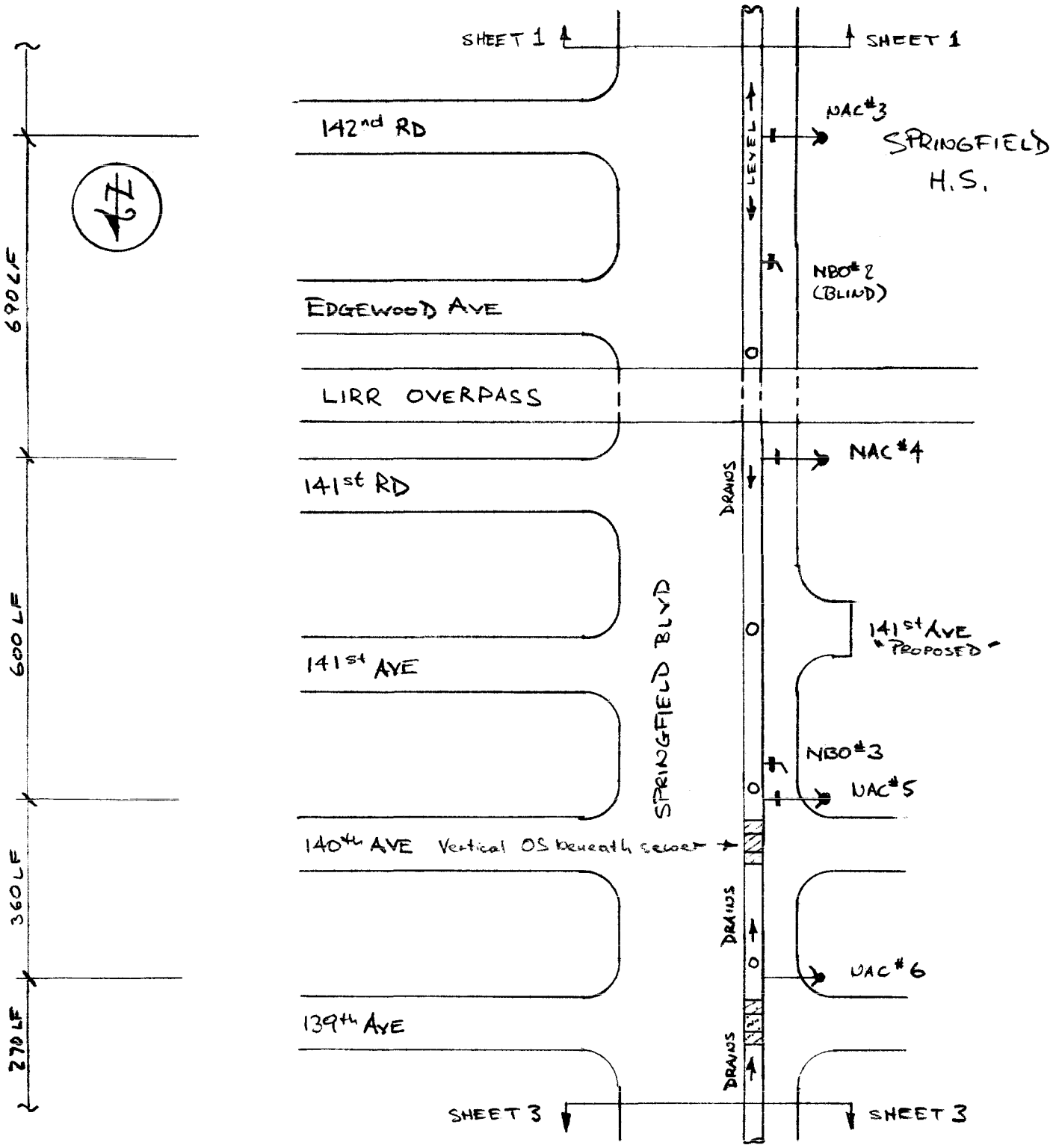

SUBJECT	SHEET	BY	DATE	JOB NO.
DISINFECTION PLAN SKETCH	3/3	WS	—	SE552C

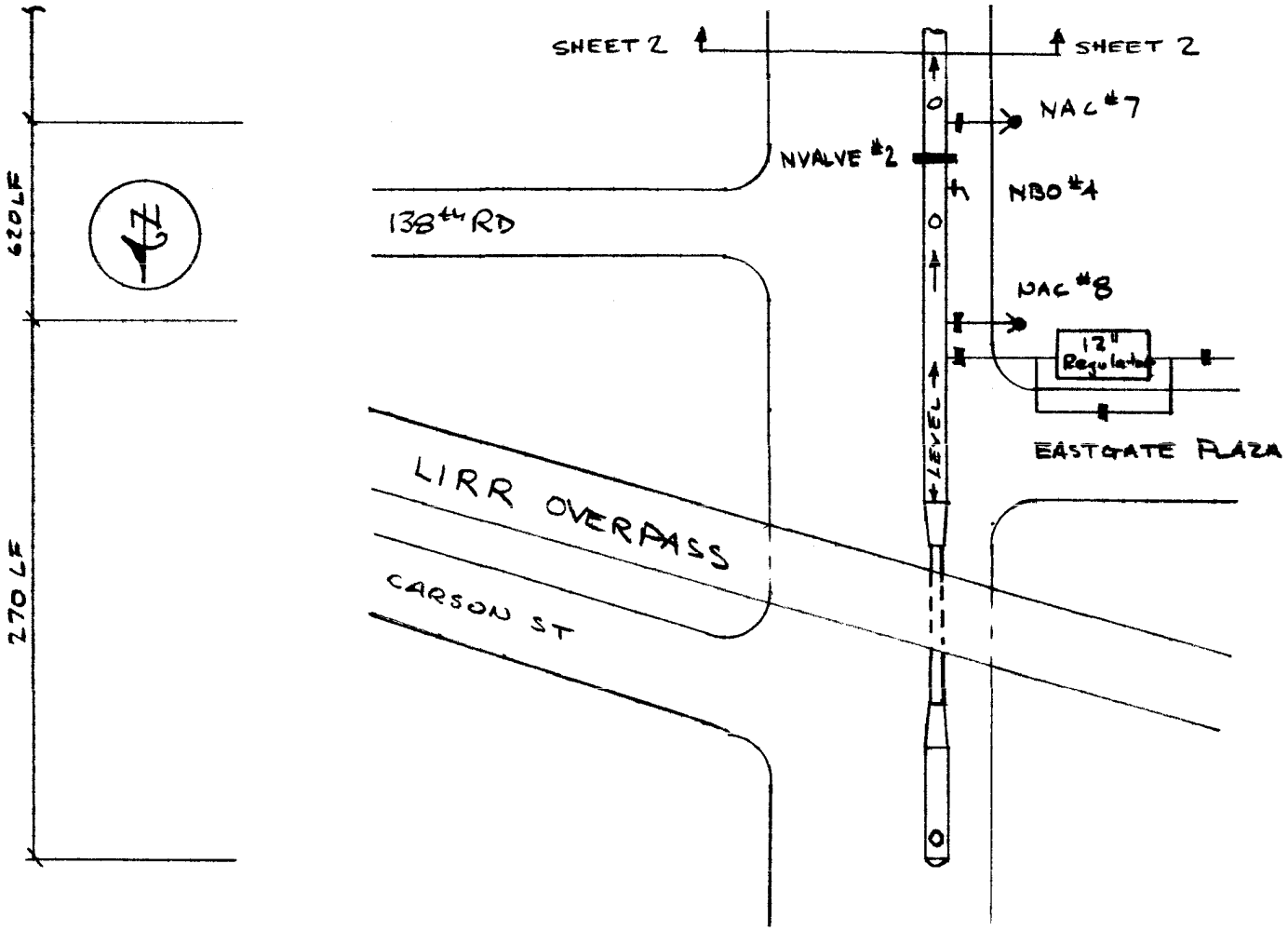

HYDRANT FLUSHING SCHEDULE

SE-552C - SPRINGFIELD BOULEVARD

Set center of flow from 4-inch hydrant outlet at 5 ft (523 GPM) and use 500 GPM as a conservative flush rate in calculations below.

Aircock / Hydrant No.	Location	Size of Pipe (INCH)	Dist. between Hydrants (LF)	No. of Hydrants Flushing	Flushing Duration for Section (MIN)	Shut Hydrant after Flushing for:		TIME SCHEDULE
						(MIN)	(HH:MM)	
	Start*						START:	***10:30 AM***
		48	230					
NAC-1	S/of N.Conduit in Belt Pkwy Shoulder			7	6.18	6.18	0:06	***10:36 AM***
		48	990					
NAC-3	W/side of Springfield Blvd at 142nd Road			6	31.02	37.20	0:37	***11:07 AM***
		48	690					
NAC-4	W/side of Springfield Blvd at 141st Road			5	25.94	63.14	1:03	***11:33 AM***
		48	600					
NAC-5	W/side of Springfield Blvd at 140th Ave.			4	28.20	91.34	1:31	***12:01 PM***
		48	360					
NAC-6	W/side of Springfield Blvd at 139th Ave.			3	22.56	113.90	1:54	***12:24 PM***
		48	270					
NAC-7	W/side of Springfield Blvd at 138th Road			2	25.38	139.29	2:19	***12:49 PM***
		48	620					
NAC-8	W/side of Springfield Blvd at Carson			1	116.56	255.85	4:16	***2:46 PM***
		48	270					
	End **						END:	***03:30 PM***

NAC-2 is located IFO Springfield High School's main entrance and is not to be used in the flushing the main.

* 6-inch bypass on new BFV located on S/Side of Belt Parkway just east of Springfield Blvd.

** Run 2-inch hose for the Duration of the Flush from terminal AMH (Check Chlorine Residual every 15 until < 1.0 PPM after last hydrant is closed.)

HYDRANT FLOW CHART

How to approximate a flow rate using this chart:

1. The hydrant height dimension (H) is measured from the top of the asphalt to the centerline of the hydrant nozzle. An average hydrant height (H) of 2'-3" (2.25 FT) is used in these calculations.

2. The "L" dimension is measured from the edge of the nozzle to the center of the stream of water striking the asphalt. Place a mark on the asphalt for the "L" dimension corresponding to the flow rate to be established.

3. Remove the hydrant cap from the nozzle to be used to approximate the flow rate (leave the other cap on).

4. Adjust the flow so that the center of the water stream is landing on the mark.

5. If you are adjusting the flow rate to achieve a chlorination contact time, adjust the center of the stream to be 2-3 inches shy of the mark this will reduce the flow rate slightly to ensure a desired contact time. If you are timing a flushing operation, adjust the center of the stream 2-3 inches beyond the mark to slightly increase the flow rate.

Formulas:

Area of Circle = A (Diameter in inches) = A(D) = PI*D^2/4

H = 0.5*g*t^2; t = SQRT(2*H/g)

L = V(L)*t; V(L) = L/SQRT(2*H/g)

Q(D/L) = A(D)*V(L) = PI*D^2/4*L/SQRT(2*H/g)

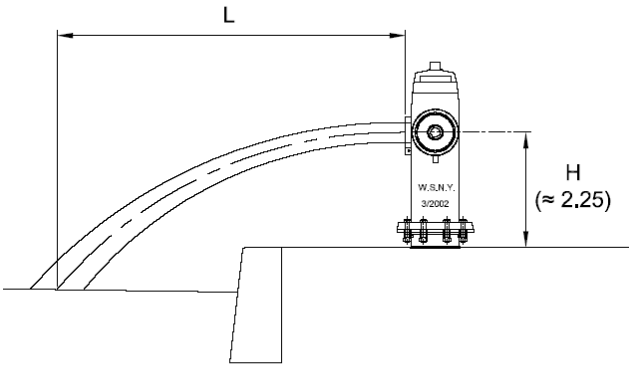

Constants & Conversions:

g = 32.2 FT/sec^2

PI = 3.14159

1 CF of Water = 7.4805 Gallons

L (FT)	Q(2.5-inch) CF/sec	Q(2.5-inch) GAL/min	Q(4-inch) CF/sec	Q(4-inch) GAL/min
1.00	0.0912	40.93	0.2334	104.77
1.25	0.1140	51.16	0.2918	130.97
1.50	0.1368	61.39	0.3502	157.16
1.75	0.1596	71.62	0.4085	183.35
2.00	0.1824	81.85	0.4669	209.55
2.25	0.2052	92.09	0.5252	235.74
2.50	0.2280	102.32	0.5836	261.93
2.75	0.2508	112.55	0.6420	288.13
3.00	0.2736	122.78	0.7003	314.32
3.25	0.2964	133.01	0.7587	340.51
3.50	0.3192	143.24	0.8170	366.71
3.75	0.3419	153.48	0.8754	392.90
4.00	0.3647	163.71	0.9337	419.09
4.25	0.3875	173.94	0.9921	445.29
4.50	0.4103	184.17	1.0505	471.48
4.75	0.4331	194.40	1.1088	497.67
5.00	0.4559	204.64	1.1672	523.87
5.25	0.4787	214.87	1.2255	550.06
5.50	0.5015	225.10	1.2839	576.25
5.75	0.5243	235.33	1.3423	602.45
6.00	0.5471	245.56	1.4006	628.64

BED-769R
Location: Saint John's Place & 5th Avenue

Disinfection Plan

Existing Pipe / Shutdown Limits Description:
The existing steel water main was installed in conjunction with the Catskill system in mid 1920's. It is predominately 72-inch steel lock-bar pipe with riveted joints and hot coal tar enamel lining and coating. The high point of the shut down is located at the intersection of Montgomery Pl. & 8th Ave. The main drains in the northern direction along 8th Ave. to St. John's Pl. and then drains west along St. John's Pl. through the new work into Douglass St. and continues to 4th Ave.

Sanitizing Agent Calculation:
The specification requires a 24-hour contact-time with a minimum concentration of 10 PPM of chloride to disinfect the main. This means at least 10 PPM of chloride must be detected at various sampling points along the main after 24-hours. Therefore, the quantity of sanitizing agent introduced must exceed an initial concentration of 10 PPM to meet the contact-time requirement as some of the agent is consumed during the disinfection process. Typically, the minimum concentration is doubled (20 PPM) to determine the quantity of sanitizing agent to be introduced.

Agent: 65% Sodium Hypochlorite Powder (Pool Chlorine)

Volume of Water $= \pi\ (6\ \text{ft})^2/4 \times (1500\ \text{ft} + 800\ \text{ft} + 800\ \text{ft} + 800\ \text{ft} + 800\ \text{ft})$
$= 132{,}889$ CF

Weight of Water = 132,889 CF x 62.5 LBS/CF
= 8,305,600 LBS

Weight of Chloride (to achieve 20 PPM solution) = 8,305,600 LBS x 20/1,000,000
= 166 LBS

Weight of 65% Sodium Hypochlorite Powder = 166 LBS / 0.65
= 255 LBS
SAY – 260 LBS plus

Procedure:

FILING AND INTRODUCING SANITIZING AGENT TO THE MAIN

10. Open Aircock - EAC#1. Open Blowoff - EBO#2. Open N.Valves#1 & #2 to allow trapped water from leaking EVALVE#2 to drain the main.

11. Set up Chlorination station at Aircock - EAC #1.

12. Open remaining aircocks - EAC#2, NAC#1 and NAC#2. Once the flow rate at EBO#2 stabilizes (it won't stop because EVALVE#2 is leaking), shut EBO#2. Partially open bypass valve (a couple of turns) on EVALVE#1.

13. Begin introducing sanitizing agent mixed in a drum with clean water and pumped into EAC#1.

14. Monitor percentage of main filled using new and existing aircocks (can use blowoffs and AMH taps). Shut each appurtenance once the sanitizing agent is detected and proceed to next upstream appurtenance and repeat process. The percentage of the amount of powder introduced should roughly equal the percentage of main filled at any given point.

15. When the sanitizing agent is detected at EAC#2, approximately half the main should be filled and half the sanitizing agent introduced. Adjust pumping operation accordingly.

16. Try to complete the introduction of the sanitizing agent at EAC#1 just before the main completely fills.

17. If any sanitizing agent remains and the main is full. Shut the bypass on EVALVE#1 and slightly open EAC#2 and pump in the remaining sanitizing agent. Shut EAC#2 and reopen the bypass on EVALVE#1 until water exits from EAC#1. Shut the bypass on EVALVE#1 and shut EAC#1.

FLUSHING THE MAIN

8. After 24 hours, samples should be taken at EAC#2, NAC#1 and NAC#2 to determine if the residual maintained in the pipe exceeded 10 PPM using a "high end" chloride detection kit. It is unlikely that a 10 PPM residual would be obtained at EAC#1 as clean water carried away the sanitizing agent downstream.

9. If OK, proceed with draining the main.

10. Open EAC#1 first and then open EBO#1 to drain the main.

11. Once the flow rate at EBO#1 stabilizes (it won't stop because E.Valve#2 is leaking), shut EBO#1.

12. Open the remaining aircocks - EAC#2, NAC#1 and NAC#2 along the pipeline and then open the bypass on EVALVE#1 to fill the main.

13. Allow the aircocks to flush for a few minutes after stable flow is achieved before closing. Repeat the process until a stable flow is detected at EAC#1. Close EAC#1 and the bypass on EVALVE#1.

14. Open the bypass on EVALVE#3. Slightly open EBO#1. The amount of water that could enter the main must exceed what is draining from the main during this process. Open EAC#1 to check for flow. If water flows out the correct balance has been achieved. If not, open the bypass more or reduce the flow through the EBO#1. This step flushes the section of trunk main located between E.Valve#3 and the new three-way.

15. Flush this section for about four hours then open the bypass on EVALVE#1 and shut the bypass on EVALVE#3. Again, the amount of water that could enter the main must exceed what is draining from the main during this process. Open E.AC#1 to check for flow. If water flows out the correct balance has been achieved. If not, open the bypass more or reduce the flow through the Blowoff#1. This step flushes the section of trunk main located in 8th Avenue, St. John's Pl and Douglass St.

SAMPLING THE MAIN

4. After 24 hours, shut EBO#1. Check chlorine residuals and water temperatures at EAC#1, EAC#2, NAC#1 and NAC#2 and through any appurtenance located on the most western end of the new work. If the results closely match, it is likely the main has been thoroughly flushed. (If not, continue flushing and repeat this step after another 24 hours.)

5. Close EBO#1 (This is contrary to the SCOP's recommendation but continually running pressurized water unnecessarily through an 80 year valve old might damage it). Keep the bypass on EVALVE#1 open to maintain pressure in the main.

6. Proceed with collecting samples for the DEP's laboratory at EAC#1 (Feed) and NAC#2 (Sample).

7. Call DEP's laboratory for test results daily. If the samples pass, immediately notify DEP to put the main into service.
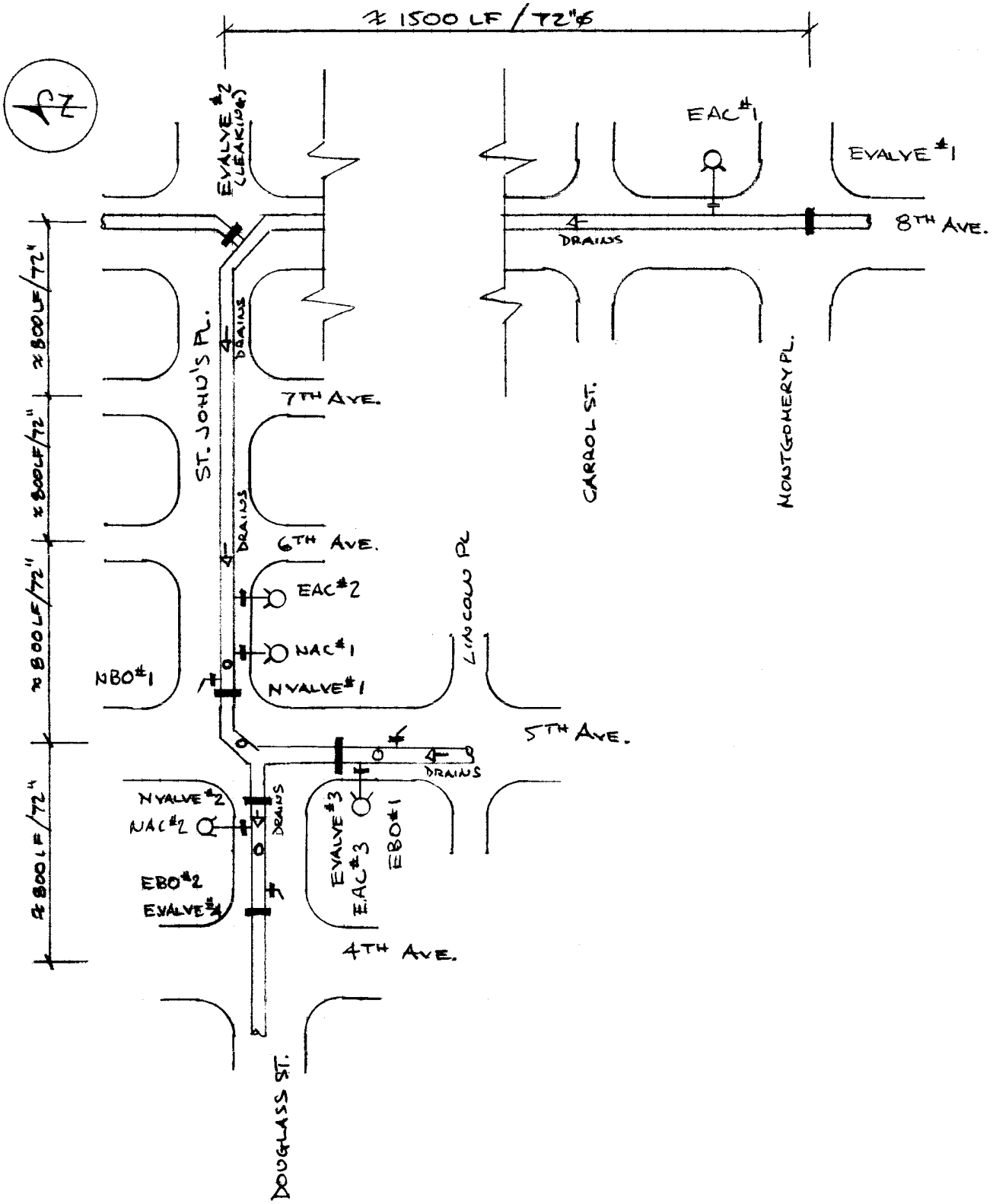
SUBJECT	SHEET	BY	DATE	JOB NO.
DISINFECTION PLAN-SKETCH	1/1	WS	—	BED-769R