ARTICLE 175
RADIATION CONTROL

General Provisions

§175.01 Applicability and inapplicability, communications.
§175.02 Definitions.
§175.03 Standards for protection against radiation.
§175.04 Notices, instructions and reports to workers; inspections.
§175.05 Fees.
§175.06 Professional practitioners and related provisions.
§175.07 Quality assurance programs.

Radiation Equipment

§175.51 Registration and inspection of installations with radiation equipment; other permitted activities.
§175.52 Exemptions of radiation equipment.
§175.53 Prohibited uses and activities.
§175.54 Surveys, shielding requirements and operator protection for diagnostic radiation machines.
§175.55 Compliance with federal standards and precedence thereof.
§175.56 General requirements for radiation equipment.
§175.57 Diagnostic radiography (other than veterinary).
§175.58 Dental radiography.
§175.59 Podiatric radiography.
§175.60 Fixed radiography (excluding dental, veterinary, and podiatric radiography).
§175.61 Portable, bedside or mobile equipment (excluding dental, veterinary and podiatric radiography).
§175.62 Fluoroscopy.
§175.63 Mammography.
§175.64 Therapeutic radiation machines.
§175.65 Veterinary radiography and fluoroscopy.
§175.66 Miscellaneous and special types of radiation equipment.

Radioactive Materials

§175.101 General requirements for radioactive materials licenses.
§175.102 Requirements for specific types of radioactive materials licenses.
§175.103 Medical use of radioactive materials.
§175.104 Waste disposal.
§175.105 Transportation of radioactive materials.

Microwave Ovens

§175.201 Microwave ovens.

Other

§175.301 Television receivers or other electronic devices.

§175.01 Applicability and inapplicability, communications.

(a) *Applicability.* (1) Except as provided in §175.01(b), this Code applies to any person who sells, transfers, assembles, receives, produces, possesses, or uses any radiation source in this City.

(b) *Inapplicability.* (1) This Code does not apply to any person with respect to any radiation source subject to regulation, as provided for by law, by the New York State Department of Labor. This exclusion does not apply to:

(A) the use of such sources in places where the general public may be exposed; or

(B) to persons with respect to radiation sources used at industrial or commercial establishments for the application of radiation to human beings.

(2) This Code does not apply to any common or contract carrier or any shipper operating within this City to the extent that such carrier or shipper is subject to regulation as provided for by law by the U.S. Department of Transportation or other agencies of the United States or agencies of the State or City of New York, except for compliance with provisions relating to transportation of radioactive materials set forth in §175.105.

(c) *Communications.* Except as otherwise provided for in this Code, or as authorized by the Department, all applications, notifications, reports or other communications filed pursuant to this Code shall be addressed to the Department at:

Office of Radiological Health
42-09 28th Street, 14th Floor
Long Island City, New York 11101-4132

§175.02 Definitions.

(a) As used in this Code, the following definitions shall apply:

"A_1" means the maximum activity of special form radioactive material permitted in a Type A package. "A_2" means the maximum activity of radioactive material, other than special form, LSA and SCO material, permitted in a Type A package. These values are either listed in Table A-1, Appendix A of §175.105 of this Code or may be derived in accordance with the procedure prescribed in such Appendix A.

"Absorbed dose" means the energy imparted by ionizing radiation per unit mass of irradiated material. The units of absorbed dose are the gray (Gy) and the rad.

"Accelerator" means any machine capable of accelerating electrons, protons, deuterons, or other charged particles in a vacuum and of discharging the resultant particulate or other radiation into a medium at energies usually in excess of 1 MeV. For purposes of this definition, "particle accelerator" is an equivalent term.

"Accelerator-produced material" means any material made radioactive by a particle accelerator.

"Accessible surface" means the external surface of the enclosure or housing provided by the manufacturer.

"Act" means the Atomic Energy Act of 1954 (42 U.S.C. 2011 et seq.), as amended.

"Activity" means the rate of disintegration or transformation or decay of radioactive material. The units of activity are the becquerel (Bq) and the curie (Ci).

"Added filtration" means any filtration which is in addition to the inherent filtration.

"Address of use" means the building or buildings that are identified on the license and where byproduct material may be received, prepared, used, or stored.

"Adult" means an individual 18 or more years of age.

"Agreement State" means any State with which the U.S. Nuclear Regulatory Commission or the U.S. Atomic Energy Commission has entered into an effective agreement under subsection 274b. of the Atomic Energy Act of 1954, as amended (73 Stat. 689).

"Airborne radioactive material" means any radioactive material dispersed in the air in the form of dusts, fumes, particulates, mists, vapors, or gases.

"Airborne radioactivity area" means a room, enclosure, or area in which airborne radioactive materials exist in concentrations:

(i) in excess of the derived air concentrations (DACs) specified in Table 1, Appendix B of §175.03 of this Code, or

(ii) to such a degree that an individual present in the area without respiratory protective equipment could exceed, during the hours an individual is present in a week, an intake of 0.6 percent of the annual limit on intake (ALI) or 12 DAC-hours.

"Aluminum equivalent" means the thickness of aluminum (type 1100 alloy) affording the same attenuation, under specified conditions, as the material in question. The nominal chemical composition of type 1100 aluminum alloy is 99.00 percent minimum aluminum, 0.12 percent copper.

"Annual limit on intake" (ALI) means the derived limit for the amount of radioactive material taken into the body of an adult worker by inhalation or ingestion in a year. ALI is the smaller value of intake of a given radionuclide in a year by the reference man that would result in a committed effective dose equivalent of 0.05 Sv (5 rem) or a committed dose equivalent of 0.5 Sv (50 rem) to any individual organ or tissue. ALI values for intake by ingestion and by inhalation of selected radionuclides are given in Table 1, Columns 1 and 2, of Appendix B of §175.03 of this Code.

"Area of use" means a portion of an address of use that has been set aside for the purpose of receiving, preparing, using, or storing byproduct material.

"As low as is reasonably achievable" (ALARA) means making every reasonable effort to maintain exposures to radiation as far below the dose limits in this Code as is practical, consistent with the purpose for which the licensed or registered activity is undertaken, taking into account the state of technology, the economics of improvements in relation to state of technology, the economics of improvements in relation to benefits to the public health and safety, and other societal and socioeconomic considerations, and in relation to utilization of nuclear energy and licensed or registered sources of radiation in the public interest.

"Assembler" means any person engaged in the business of assembling, replacing, or installing one or more components into an x-ray system or subsystem. The term includes the owner of an x-ray system or such person's employee or agent who assembles components into an x-ray system that is subsequently used to provide professional or commercial services.

"Attenuation block" means a block or stack, having dimensions 20 centimeters by 20 centimeters by 3.8 centimeters (8 inches by 8 inches by 1.5 inches), of type 1100 aluminum alloy or other materials having equivalent attenuation.

"Authorized medical physicist" means an individual who—

(i) Is a "professional medical physicist" as provided for in Article 166 of the New York State Education Law (§§8700-8709), and meets the requirements of §§175.103(j)(2) and 175.103(j)(15) of this Code; or

(ii) Is identified as an authorized medical physicist or teletherapy physicist on—

(A) A specific medical use license issued by the Commission or Agreement State;

(B) A medical use permit issued by a Commission master material licensee;

(C) A permit issued by a Commission or Agreement State broad scope medical use licensee; or

(D) A permit issued by a Commission master material license broad scope medical use permittee.

"Authorized nuclear pharmacist" means a pharmacist who-

(i) Is approved by the New York State Department of Education, Office of the Professions, and meets the requirements in §§175.103(j)(3) and 175.103(j)(15) of this Code; or

(ii) Is identified as an authorized nuclear pharmacist on—

(A) A specific license issued by the Commission or Agreement State that authorizes medical use or the practice of nuclear pharmacy;

(B) A permit issued by a Commission master material licensee that authorizes medical use or the practice of nuclear pharmacy;

(C) A permit issued by a Commission or Agreement State broad scope medical use licensee that authorizes medical use or the practice of nuclear pharmacy; or (iv) A permit issued by a Commission master material license broad scope medical use permittee that authorizes medical use or the practice of nuclear pharmacy; or

(iii) Is identified as an authorized nuclear pharmacist by a commercial nuclear pharmacy that has been authorized to identify authorized nuclear pharmacists; or

(iv) Is designated as an authorized nuclear pharmacist in accordance with 10 CFR §32.72(b)(4).

"Authorized user" means a physician, dentist, or podiatrist who—

(i) Meets the requirements in §§175.103(j)(15) and 175.103(j)(4)(i), 175.103(j)(5)(i), 175.103(j)(6)(i), 175.103(j)(7)(i), 175.103(j)(8)(i), 175.103(j)(10)(i), 175.103(j)(12)(i), or 175.103(j)(13)(i) of this Code; or

(ii) is identified as an authorized user on—

(A) a Department, Agreement State, or U.S. Nuclear Regulatory Commission license that authorizes the medical use of byproduct material; or

(B) A permit issued by a Commission master material licensee that is authorized to permit the medical use of byproduct material; or

(C) A permit issued by a Commission or Agreement State specific licensee of broad scope that is authorized to permit the medical use of byproduct material; or;

(D) A permit issued by a Commission master material license broad scope permittee that is authorized to permit the medical use of byproduct material; or

(iii) who is named as an authorized user on a certified registration issued by the Department.

"Automatic exposure control" means a device which automatically controls one or more technique factors in order to obtain a required quantity of radiation at a preselected location(s).

"Background radiation" means radiation from cosmic sources; naturally occurring radioactive material, including radon (except as a decay product of source or special nuclear material); and global fallout as it exists in the environment from the testing of nuclear explosive devices or from past nuclear accidents such as Chernobyl that contribute to background radiation and are not under the control of the licensee. "Background radiation" does not include radiation from any regulated sources of radiation.

"Barrier" (See “Protective barrier”).

"Beam axis" means a line from the source through the centers of the x-ray fields.

"Beam-limiting device" means a device which provides a means to restrict the dimensions of the x-ray beam.

"Beam monitoring system" means a system designed to detect and measure the radiation present in the useful beam.

"Becquerel" (Bq) means the SI unit of activity. One becquerel is equal to 1 disintegration (d) or transformation (t) per second ($d\text{-}s^{-1}$ or $t\text{-}s^{-1}$).

"Bioassay" means the determination of kinds, quantities or concentrations, and, in some cases, the locations of radioactive material in the human body, whether by direct measurement, in vivo counting, or by analysis and evaluation of materials excreted or removed from the human body. For purposes of this Code, "radiobioassay" is an equivalent term.

"Brachytherapy" means a method of radiation therapy in which sources are utilized to deliver a radiation dose at a distance of up to a few centimeters by surface, intracavitary, intraluminal or interstitial application. Brachytherapy includes radiation therapy using electronic remote after-loading devices.

"Brachytherapy source" means a radioactive source or a manufacturer-assembled source train or a combination of these sources that is designed to deliver a therapeutic dose within a distance of a few centimeters.

"Breast equivalent phantom" means a device which contains test objects of various specified dimensions as speck sets, masses and fibers representing low density areas and microcalcifications related to the imaging of breast lesions and which can be imaged by a mammographic x-ray system to visualize such test objects.

"Byproduct material" means:

(i) Any radioactive material (except special nuclear material) yielded in, or made radioactive by, exposure to the radiation incident to the process of producing or using special nuclear material; and

(ii) The tailings or wastes produced by the extraction or concentration of uranium or thorium from ore processed primarily for its source material content, including discrete surface wastes resulting from uranium or thorium solution extraction processes. Underground ore bodies depleted by these solution extraction operations do not constitute "byproduct material" within this definition.

(iii) (A) Any discrete source of radium-226 that is produced, extracted, or converted after extraction, before, on, or after August 8, 2005, for use for a commercial, medical, or research activity; or

(B) Any material that—

(a) Has been made radioactive by use of a particle accelerator; and

(b) Is produced, extracted, or converted after extraction, before, on, or after August 8, 2005, for use for a commercial, medical, or research activity; and

(iv) Any discrete source of naturally occurring radioactive material, other than source material, that—

(A) The Commission, in consultation with the Administrator of the Environmental Protection Agency, the Secretary of Energy, the Secretary of Homeland Security, and the head of any other appropriate Federal agency, determines would pose a threat similar to the threat posed by a discrete source of radium-226 to the public health and safety or the common defense and security; and

(B) Before, on, or after August 8, 2005, is extracted or converted after extraction for use in a commercial, medical, or research activity.

"Calendar quarter" means not less than 12 consecutive weeks nor more than 14 consecutive weeks. The first calendar quarter of each year shall begin in January and subsequent calendar quarters shall be so arranged such that no day is included in more than one calendar quarter and no day in any one year is omitted from inclusion within a calendar quarter. No licensee or registrant shall change the method observed by him/her of determining calendar quarters for purposes of this Code except at the beginning of a year.

"Calibration" means the determination of:

(i) the response or reading of an instrument relative to a series of known radiation values over the range of the instrument, or

(ii) the strength of a source of radiation relative to a standard.

"C-arm x-ray system" means an x-ray system in which the image receptor and x-ray tube housing assembly are connected by a common mechanical support system in order to maintain a desired spatial relationship. This system is designed to allow a change in the projection of the beam through the patient without a change in the position of the patient.

"Carrier" means a person engaged in the transportation of passengers or property by land or water as a common, contract, or private carrier, or by civil aircraft.

"Certified components" means components of x-ray systems which are subject to regulations promulgated under Public Law 90-602, the Radiation Control for Health and Safety Act of 1968.

"Certified registration" means a registration for any therapeutic radiation machine issued by the Department upon review and approval of an application submitted pursuant to this Code.

"Certified system" means any x-ray system which has one or more certified components.

"Certified Radiation Equipment Safety Officer" means an individual who holds an unexpired certificate as a radiation equipment safety officer issued by the New York State Department of Health.

"CFR" means Code of Federal Regulations.

"Chelating agent" means amine polycarboxylic acids, hydroxycarboxylic acids, gluconic acid, and polycarboxylic acids.

"City" means the City of New York.

"Class" means a classification scheme for inhaled material according to its rate of clearance from the pulmonary region of the lung. Materials are classified as D, W, or Y, which applies to a range of clearance half-times: for Class D, Days, of less than 10 days; for Class W, Weeks, from 10 to 100 days; and for Class Y, Years, of greater than 100 days. For purposes of this Code, "lung class" and "inhalation class" are equivalent terms.

"Client's address" means the area of use or a temporary job site for the purpose of providing mobile medical service in accordance with §175.103(c)(12) of this Code.

"Coefficient of Variation," or "C" means the ratio of the standard deviation to the mean value of a population of observations. It is estimated using the following equation:

$$C = \frac{s}{X} = \frac{1}{X}\left[\sum_{i=1} \frac{(X_i - X)^2}{(n-1)}\right]^{1/2}$$

where

s = estimated standard deviation of the population.

X = mean value of observations in sample.

X_i = i^{th} observation in sample.

n = number of observations in sample.

"Collective dose" means the sum of the individual doses received in a given period of time by a specified population from exposure to a specified source of radiation.

"Collimator" means a device by which a radiation beam is restricted in size.

"Commission" means the United States Nuclear Regulatory Commission.

"Commissioner" means the Commissioner of Health and Mental Hygiene of the City of New York.

"Committed dose equivalent" ($H_{T,50}$) means the dose equivalent to organs or tissues of reference (T) that will be received from an intake of radioactive material by an individual during the 50-year period following the intake.

"Committed effective dose equivalent" ($H_{E,50}$) is the sum of the products of the weighting factors applicable to each of the body organs or tissues that are irradiated and the committed dose equivalent to each of these organs or tissues ($H_{E,50} = S\ w_T, H_{T,50}$).

"Computed tomography" or "CT" means the production of a tomogram by the acquisition and computer processing of x-ray transmission data.

"Cone" means a device used to indicate beam direction and to establish a minimum source-surface distance. It may or may not incorporate a collimator.

"Consortium" means an association of medical use licensees and a PET radionuclide production facility in the same geographic area that jointly own or share in the operation and maintenance cost of the PET radionuclide facility that produces PET radionuclides for use in producing radioactive drugs within the consortium for noncommercial distribution among its associated members for medical use. The PET radionuclide production facility within the consortium must be located at an educational institution or a federal facility or a medical community.

"Contamination" means the presence in or on any animal, food, water supply, building or premises, body of water, municipal sewage disposal system, chattel or thing of a solid, liquid or gas emitting ionizing radiation which may constitute a danger to human beings.

"Control panel" means that part of radiation equipment upon which is mounted the switches, knobs, pushbuttons, and other hardware necessary for manually setting the technique factors.

"Conveyance" means: (i) "For transport by public highway or rail" any transport vehicle or large freight container;

(ii) "For transport by water" any vessel, or any hold, compartment, or defined deck area of a vessel including any transport vehicle on board the vessel; and

(iii) "For transport by aircraft" any aircraft.

"Cooling curve" means the graphical relationship between heat units stored and cooling time.

"Critical Group" means the group of individuals reasonably expected to receive the greatest exposure to residual radioactivity for any applicable set of circumstances.

"Curie" means a unit of activity. One curie (Ci) is that quantity of radioactive material which decays at the rate of 3.7E10 transformations per second ($t\text{-}s^{-1}$).

"Cyclotron" means a particle accelerator in which the charged particles travel in an outward spiral or circular path. A cyclotron accelerates charged particles at energies in excess of 10

megaelectron volts and is commonly used for production of short half-life radionuclides for medical use.

"Dead-man switch" means a switch so constructed that a circuit closing contact can be maintained only by continuous pressure on the switch by the operator.

"Declared pregnant woman" means a woman who has voluntarily informed her employer, in writing, of her pregnancy and the estimated date of conception. The declaration remains in effect until the declared pregnant woman withdraws the declaration in writing or is no longer pregnant.

"Decommission" means to remove a facility or site safely from service and reduce residual radioactivity to a level that permits-

(i) Release of the property for unrestricted use and termination of the license; or

(ii) Release of the property under restricted conditions and the termination of the license.

"Dedicated check source" means a radioactive source that is used to assure the constant operation of a radiation detection or measurement device over several months or years.

"Deep dose equivalent" (H_d), which applies to external whole body exposure, means the dose equivalent at a tissue depth of 1 centimeter (1000 mg/cm^2).

"Dentist" means an individual licensed by a State or Territory of the United States, the District of Columbia, or the Commonwealth of Puerto Rico to practice dentistry.

"Department" means the New York City Department of Health and Mental Hygiene.

"Depleted uranium" means the source material uranium in which the isotope uranium-235 is less than 0.711 weight percent of the total uranium present.

"Derived air concentration" (DAC) means the concentration of a given radionuclide in air which, if breathed by the reference man for a working year of 2,000 hours under conditions of light work, results in an intake of one ALI. For purposes of this Code, the condition of light work is an inhalation rate of 1.2 cubic meters of air per hour for 2,000 hours in a year. DAC values are given in Table 1, Column 3, of Appendix B of §175.03 of this Code.

"Derived air concentration-hour" (DAC-hour) means the product of the concentration of radioactive material in air, expressed as a fraction or multiple of the derived air concentration for each radionuclide, and the time of exposure to that radionuclide, in hours. A licensee or registrant may take 2,000 DAC-hours to represent one ALI, equivalent to a committed effective dose equivalent of 0.05 Sv (5 rem).

"Deterministic effect" (See “Nonstochastic effect”).

"Diagnostic source assembly" means the tube housing assembly with a beam-limiting device attached.

"Diagnostic type protective tube housing" means an x-ray tube housing so constructed that the leakage radiation at a distance of one meter from the tube housing does not exceed 2.58 E-5 C-kg^{-1} (100 milliroentgens) in one hour with a beam-limiting device attached and the tube operated at its leakage technique factors as specified by the manufacturer. Measurements may be averaged over an area of 100 cm^2 with no linear dimensions greater than 20 centimeters (8 inches).

"Diagnostic x-ray system" means an x-ray system designed for irradiation of any part of the human body for the purpose of diagnosis or visualization.

"Diaphragm" means a device or mechanism by which the radiation beam is restricted in size.

"Discrete source" means a radionuclide that has been processed so that its concentration within a material has been purposely increased for commercial, medical or research activities.

"Distinguishable from background" means that the detectable concentration of a radionuclide is statistically different from the background concentration of that radionuclide in the vicinity of the

site or, in the case of structures, in similar materials using adequate measurement technology, survey, and statistical techniques.

"Dose" is a generic term that means absorbed dose, dose equivalent, effective dose equivalent, committed dose equivalent, committed effective dose equivalent, total organ dose equivalent, or total effective dose equivalent. For purposes of this Code, "radiation dose" is an equivalent term.

"Dose equivalent (H_T)" means the product of the absorbed dose in tissue, quality factor, and all other necessary modifying factors at the location of interest. The units of dose equivalent are the sievert (Sv) and rem.

"Dose limits" means the permissible upper bounds of radiation doses established in accordance with this Code. For purposes of this Code, "limits" is an equivalent term.

"Dose monitor unit" (See “Monitor unit”).

"Dosimetry processor" means an individual or an organization that processes and evaluates individual monitoring devices in order to determine the radiation dose delivered to the monitoring devices.

"Effective dose equivalent (H_E)" means the sum of the products of the dose equivalent to each organ or tissue (H_T) and the weighting factor (w_T) applicable to each of the body organs or tissues that are irradiated ($H_E = S\ w_T H_T$).

"Embryo/fetus" means the developing human organism from conception until the time of birth.

"Entrance or access point" means any opening through which an individual or extremity of an individual could gain access to radiation areas or to licensed or registered radioactive materials. This includes entry or exit portals of sufficient size to permit human entry, irrespective of their intended use.

"Entrance exposure rate" means the exposure per unit time at the point where the center of the useful beam enters the patient. For the purposes of this definition, "exposure" is defined in this subdivision.

"Equipment" means x-ray equipment.

"Exclusive use" (also referred to in other regulations as "sole use" or "full load") means the sole use of a conveyance by a single consignor for which all initial, intermediate, and final loading and unloading are carried out in accordance with the direction of the consignor or consignee. The consignor and the carrier must ensure that any loading or unloading is performed by personnel having radiological training and resources appropriate for safe handling of the consignment. The consignor must issue specific instructions, in writing, for maintenance of exclusive use shipment controls, and include them with the shipping paper information provided to the carrier by the consignor.

"Explosive material" means any chemical compound, mixture, or device which produces a substantial instantaneous release of gas and heat spontaneously or by contact with sparks or flame.

"Exposure" means either:

(i) being exposed to ionizing radiation or to radioactive material; or

(ii) the quotient of dQ divided by dm where "dQ" is the absolute value of the total charge of the ions of one sign produced in air when all the electrons (negatrons and positrons) liberated by photons in a volume element of air having mass "dm" are completely stopped in air. The units of exposure are the coulomb per kilogram ($C\text{-}kg^{-1}$) and the roentgen.

"Exposure rate" means the exposure per unit of time.

"External beam radiation therapy" means a method of radiation therapy utilized to deliver a radiation dose in which the source (sources) of radiation is (are) at a distance from the body. For the purposes of this Code "teletherapy" is an equivalent term.

"External dose" means that portion of the dose equivalent received from any source of radiation outside the body.

"Extremity" means hand, elbow, arm below the elbow, foot, knee, and leg below the knee.

"Field emission equipment" means equipment which uses an x-ray tube in which electron emission from the cathode is due solely to the action of an electric field.

"Filter" means material placed in the useful beam to absorb preferentially selected radiations.

"Fissile material" means plutonium-239, plutonium-241, uranium-233, uranium-235 or any combination of these radionuclides. Fissile material means the fissile nuclides themselves, not material containing fissile nuclides. Unirradiated natural uranium and depleted uranium, and natural uranium or depleted uranium that has been irradiated in thermal reactors only are not included in this definition. Certain exclusions from fissile material controls are provided in 10 CFR 71.15

"Fluoroscopic imaging assembly" means a subsystem in which x-ray photons produce a fluoroscopic image. It includes the image receptor(s) such as the image intensifier and spot-film device, electrical interlocks, if any, and structural material providing linkage between the image receptor and diagnostic source assembly.

"Former U.S. Atomic Energy Commission (AEC) or U.S. Nuclear Regulatory Commission (NRC) licensed facilities" means nuclear reactors, nuclear fuel reprocessing plants, uranium enrichment plants, or critical mass experimental facilities where AEC or NRC licenses have been terminated.

"Gantry" means that part of a radiation therapy system supporting and allowing movements of the radiation head about a center of rotation.

"General purpose radiographic x-ray system" means any radiographic x-ray system which, by design, is not limited to radiographic examination of specific anatomical regions.

"Generally applicable environmental radiation standards" means standards issued by the U.S. Environmental Protection Agency (EPA) under the authority of the Atomic Energy Act of 1954, as amended, that impose limits on radiation exposures or levels, or concentrations or quantities of radioactive material, in the general environment outside the boundaries of locations under the control of persons possessing or using radioactive material.

"Gonad or gonadal shield" means a protective barrier for the ovaries or testes.

"Gray" (Gy) means the SI unit of absorbed dose. One gray is equal to an absorbed dose of 1 joule per kilogram. One gray is equal to 100 rads.

"Half-value layer (HVL)" means the thickness of specified material which, when introduced into the beam of a given path of radiation, reduces the exposure rate by one-half. In this definition, the contribution of all scattered radiation, other than any which might be present initially in the beam concerned, is deemed to be excluded.

"Hazardous waste" means those wastes designated as hazardous by U.S. Environmental Protection Agency regulations in 40 CFR Part 261.

"High dose-rate remote afterloader" means a brachytherapy device that remotely delivers a dose rate in excess of 12 gray (1200 rads) per hour at the point or surface where the dose is prescribed.

"High radiation area" means an area, accessible to individuals, in which radiation levels from radiation sources external to the body could result in an individual receiving a dose equivalent in

excess of 1 mSv (0.1 rem) in 1 hour at 30 centimeters from the radiation source or 30 centimeters from any surface that the radiation penetrates.

"Human use" (See "Medical use").

"Image receptor" means any device, such as a fluorescent input phosphor or radiographic film, which transforms incident x-ray photons either into a visible image or into another form which can be made into a visible image by further transformation.

"Individual" means any human being.

"Individual monitoring" means the assessment of:

(i) dose equivalent

(A) by the use of individual monitoring devices, or

(B) by the use of survey data; or

(ii) committed effective dose equivalent

(A) by bioassay, or

(B) by determination of the time-weighted air concentrations to which an individual has been exposed, that is, DAC-hours.

"Individual monitoring devices" (individual monitoring equipment) means devices designed to be worn by a single individual for the assessment of dose equivalent such as film badges, thermoluminescent dosimeters (TLDs), pocket ionization chambers, and personal ("lapel") air sampling devices.

"Inhalation class" (See "Class").

"Inherent filtration" means the filtration of the useful beam provided by the permanently installed components of the tube housing assembly.

"Inspection" means an official examination or observation including, but not limited to, tests, surveys, and monitoring to determine compliance with rules, regulations, orders, requirements, and conditions of the Department.

"Interlock" means a device arranged or connected such that the occurrence of an event or condition is required before a second event or condition can occur or continue to occur.

"Internal dose" means that portion of the dose equivalent received from radioactive material taken into the body.

"Kilo electron volt (keV)" means the energy equal to that acquired by a particle with one electron charge in passing through a potential difference of one thousand volts in a vacuum.

"Kilovolt peak (kVp)" means the maximum value in kilovolts of the potential difference of a pulsating generator. When only one-half of the wave is used, the value refers to the useful half of the wave.

"Lead equivalent" means the thickness of lead affording the same attenuation, under specified conditions, as the material in question.

"Leakage radiation" means radiation emanating from the diagnostic source assembly except for:

(i) the useful beam, and

(ii) radiation produced when the exposure switch or timer is not activated.

"Leakage technique factors" means the technique factors associated with the diagnostic or therapeutic source assembly which are used in measuring leakage radiation. They are defined as follows:

(i) for diagnostic source assemblies intended for capacitor energy storage equipment, the maximum-rated peak tube potential and the maximum-rated number of exposures in an hour for operation at the maximum-rated peak tube potential with the quantity of charge per exposure

being 10 millicoulombs, i.e., 10 milliampere seconds, or the minimum obtainable from the unit, whichever is larger.

(ii) for diagnostic source assemblies intended for field emission equipment rated for pulsed operation, the maximum-rated peak tube potential and the maximum-rated number of x-ray pulses in an hour for operation at the maximum-rated peak tube potential.

(iii) for all other diagnostic or therapeutic source assemblies, the maximum-rated peak tube potential and the maximum-rated continuous tube current for the maximum-rated peak tube potential.

"Lens dose equivalent" means the external exposure to the lens of the eye and is taken as the dose equivalent at a tissue depth of 0.3 centimeter (300 mg/cm^2).

"License" means a radioactive materials license issued by the Department for the transfer, receipt, production, possession or use of radioactive materials pursuant to this Code. There are two types of licenses: general and specific. A "general license" means a license to transfer, receive, possess, or use radioactive material in certain forms or quantities which is issued pursuant to the terms and conditions of this Code. General licenses are effective without the filing of an application with or the issuance of a license document by the Department. A "specific license" means a license evidenced by a license document issued by the Department to a licensee upon review and approval of an application submitted pursuant to this Code or a license similarly issued by the New York State Department of Health, the New York State Department of Labor, the U.S. Nuclear Regulatory Commission or any agreement state. Unless otherwise specified, the type of license referred to in this Code shall be a specific license.

"Licensed material" means byproduct, source, or special nuclear material received, possessed, produced, used, transferred or disposed of under a general or specific license issued by the Department or any radioactive material which is subject to the licensure requirement of this Code.

"Licensee" means any person who is licensed by the Department in accordance with this Code or any person who possesses radioactive material which is subject to the licensure requirements of this Code.

"Limits" (See “Dose limits”).

"Light field" means the area illuminated by visible light, simulating the radiation field.

"Linear accelerator". For the purposes of this Code, "linac" is an equivalent term.

"Line-voltage regulation" means the difference between the no-load line potentials expressed as a percent of the load line potential; that is,

$$\text{Percent line-voltage regulation} = 100\,\frac{(V_n - V_1)}{V_1}$$

where:

V_n = No-load line potential and

V_1 = Line load potential.

"Lost or missing licensed material" means licensed radioactive material whose location is unknown. This definition includes licensed material that has been shipped but has not reached its planned destination and whose location cannot be readily traced in the transportation system.

"Low dose-rate remote afterloader" means a brachytherapy device that remotely delivers a dose rate of less than or equal to 2 gray (200 rads) per hour at the point or surface where the dose is prescribed.

"Low specific activity (LSA) material" means radioactive material with limited specific activity which is nonfissile or is excepted under §175.105(b)(2) that satisfies the descriptions and limits

set forth below. Shielding materials surrounding the LSA material may not be considered in determining the estimated average specific activity of the package contents. LSA material must be in one of three groups:

(1) LSA-I.

(i) Uranium and thorium ores, concentrates of uranium and thorium ores, and other ores containing naturally occurring radioactive radionuclides that are not intended to be processed for the use of these radionuclides; or

(ii) Solid unirradiated natural uranium or depleted uranium or natural thorium or their solid or liquid compounds or mixtures; or

(iii) Radioactive material, other than fissile material, for which the A_2 value is unlimited; or

(iv) Mill tailings, contaminated earth, concrete, rubble, other debris, and activated material in which the radioactive material is essentially uniformly distributed, and the average specific activity does not exceed 10^{-6} A_2/g.

(2) LSA-II.

(i) Water with tritium concentration up to 0.8 TBq/liter (20.0 Ci/liter); or

(ii) Material in which the radioactive material is essentially uniformly distributed, and the average specific activity does not exceed 10^{-4} A_2/g for solids and gases, and 10^{-5} A_2/g for liquids.

(3) LSA-III. Solids (e.g., consolidated wastes, activated materials) excluding powders, that satisfy the requirements of 10 CFR §71.77 in which:

(i) The radioactive material is essentially uniformly distributed throughout a solid or a collection of solid objects, or is essentially uniformly distributed in a solid compact binding agent (such as concrete, bitumen, ceramic, etc.);

(ii) The radioactive material is relatively insoluble, or it is intrinsically contained in a relatively insoluble material, so that, even under loss of packaging, the loss of radioactive material per package by leaching, when placed in water for 7 days, would not exceed 0.1 A_2; and

(iii) The estimated average specific activity of the solid does not exceed 2×10^{-3} A_2/g.

"Lung class" (See "Class").

"Major processor" means a user processing, handling, or manufacturing radioactive material exceeding Type A quantities as unsealed sources or material, or exceeding 4 times Type B quantities as sealed sources, but does not include nuclear medicine programs, universities, industrial radiographers, or small industrial programs.

"Management" means the chief executive officer or other individual having the authority to manage, direct, or administer the licensee's activities, or those persons' delegate or delegates.

"Manual brachytherapy" means a type of brachytherapy in which the brachytherapy sources (e.g., seeds, ribbons) are manually placed topically on or inserted either into the body cavities that are in close proximity to a treatment site or directly into the tissue volume.

"Maximum line current" means the root-mean-square current in the supply line of an x-ray machine operating at its maximum rating.

"Medical event" means an event that meets the criteria in §175.03(l)(9) of this Code.

"Medical institution" means a facility as defined in Article 28 of the New York State Public Health Law.

"Medical use" means the intentional internal or external administration of radiation, byproduct material or the radiation from byproduct material to patients or human research subjects under the supervision of an authorized user. For purposes of this Code, "human use" is an equivalent term.

"Medium dose-rate remote afterloader" means a brachytherapy device that remotely delivers a dose rate of greater than 2 gray (200 rads) per hour, but less than or equal to 12 gray (1200 rads) per hour at the point or surface where the dose is prescribed.

"Mega electron volt (MeV)" means the energy equal to that acquired by a particle with one electron charge passing through a potential difference of one million volts in a vacuum.

"Member of the public" means any individual, except when that individual is receiving an occupational dose.

"Minor" means an individual less than 18 years of age.

"Mobile medical service" means the transportation of byproduct material to and its medical use at the client's address.

"Monitor unit" means a unit response from the beam monitoring system from which the absorbed dose can be calculated. For the purposes of this Code, "Dose monitor unit" is an equivalent term.

"Monitoring" means the measurement of radiation, radioactive material concentrations, surface area activities or quantities of radioactive material and the use of the results of these measurements to evaluate potential exposures and doses. For purposes of this Code, "radiation monitoring" and "radiation protection monitoring" are equivalent terms.

"NARM" means any naturally occurring or accelerator-produced radioactive material. It does not include byproduct, source, or special nuclear material.

"Natural radioactivity" means radioactivity of naturally occurring nuclides.

"Nonstochastic effect" means a health effect, the severity of which varies with the dose and for which a threshold is believed to exist. Radiation-induced cataract formation is an example of a nonstochastic effect. For purposes of this Code, "deterministic effect" is an equivalent term.

"Normal form radioactive material" means radioactive material which has not been demonstrated to qualify as special form radioactive material.

"Nuclear Regulatory Commission" (NRC) means the U.S. Nuclear Regulatory Commission or its duly authorized representatives.

"Occupational dose" means the dose received by an individual in the course of employment in which the individual's assigned duties involve exposure to radiation or to radioactive material from licensed and unlicensed sources of radiation, whether in the possession of the licensee, registrant, or other person. Occupational dose does not include doses received from background radiation, from any medical administration the individual has received, from exposure to individuals administered radioactive material and released under §175.103(c)(9), from voluntary participation in medical research programs, or as a member of the public.

"Operator" means any person conducting the business or activities carried on within a radiation installation or having by law the administrative control of a radiation source whether as owner, lessee, contractor, user or otherwise.

"Output" means the exposure rate, dose rate, or a quantity related in a known manner to these rates from a brachytherapy source or a teletherapy, remote afterloader, or gamma stereotactic radiosurgery unit for a specified set of exposure conditions.

"Package" means the packaging together with its radioactive contents as presented for transport.

(i) "Fissile material package" or Type AF package, Type BF package, Type BF package, or Type B(U)F package, or Type B(M)F package means a fissile material packaging together with its fissile material contents.

(ii) "Type A package" means a Type A packaging together with its radioactive contents. A Type A package is defined and must comply with DOT regulations in 49 CFR Part 173.

(iii) "Type B package" means a Type B packaging together with its radioactive contents. On approval by the NRC, a Type B package design is designated by NRC as B(U) unless the package has a maximum normal operating pressure of more than 700 kPa (100 lb/in^2) gauge or a pressure relief device that would allow the release of radioactive material to the environment under the tests specified in 10 CFR 71.73 (hypothetical accident conditions), in which case it will receive a designation B(M). B(U) refers to the need for unilateral approval of international shipments; B(M) refers to the need for multilateral approval of international shipments. There is no distinction made in how packages with these designations may be used in domestic transportation. To determine their distinction for international transportation, see USDOT regulations in 49 CFR Part 173. A Type B package approved before September 6, 1983, was designated only as Type B. Limitations on its use are specified in 10 CFR 71.13.

"Packaging" means the assembly of components necessary to ensure compliance with the packaging requirements of 10 CFR Part 71. It may consist of one or more receptacles, absorbent materials, spacing structures, thermal insulation, radiation shielding, and devices for cooling or absorbing mechanical shocks. The vehicle, tie-down system, and auxiliary equipment may be designated as part of the packaging.

"Particle accelerator" means any machine capable of accelerating electrons, protons, deuterons, or other charged particles in a vacuum and of discharging the resultant particulate or other radiation into a medium at energies usually in excess of 1 megaelectron volt. For the purposes of this definition, “accelerator” is an equivalent term.

"Patient intervention" means actions by the patient or human research subject, whether intentional or unintentional, such as dislodging or removing treatment devices or prematurely terminating the administration.

"Peak tube potential" means the maximum value of the potential difference across the x-ray tube during an exposure.

"Person" means any individual, corporation, partnership, firm, association, trust, estate, public or private institution, group, agency, public authority or political subdivision of this State, any other State of the United States or political subdivision or agency thereof, and any legal successor, representative, agent or agency of the foregoing, but shall not include federal government agencies.

"Personnel monitoring equipment" (See “Individual monitoring devices”).

"Phantom" means an object behaving in essentially the same manner as tissue with respect to absorption or scattering of the ionizing radiation in question.

"Pharmacist" means an individual licensed by a State or Territory of the United States, the District of Columbia, or the Commonwealth of Puerto Rico to practice pharmacy.

"Physician" means a medical doctor or doctor of osteopathy licensed by a State or Territory of the United States, the District of Columbia, or the Commonwealth of Puerto Rico to prescribe drugs in the practice of medicine.

"Planned special exposure" means an infrequent exposure to radiation, separate from and in addition to the annual occupational dose limits.

"Podiatrist" means an individual licensed by a State or Territory of the United States, the District of Columbia, or the Commonwealth of Puerto Rico to practice podiatry.

"Position indicating device (PID)" means a device on dental x-ray equipment used to indicate the beam position and to establish a definite source-surface (skin) distance.

"Positive collimating device" means a device which is permanently affixed to the x-ray tube housing and is intended to confine the emerging x-ray beam to the image receptor or area of clinical interest, whichever is smaller.

"Positron emission tomography (PET) radionuclide production facility" means a facility operating a cyclotron or accelerator for the purpose of producing PET radionuclides.

"Preceptor" means an individual who provides, directs, or verifies training and experience required for an individual to become an authorized user, an authorized medical physicist, an authorized nuclear pharmacist, or a Radiation Safety Officer.

"Prescribed dosage" means the specified activity or range of activity of unsealed byproduct material as documented—

(i) In a written directive; or

(ii) In accordance with the directions of the authorized user for procedures performed pursuant to §§175.103(d) of this Code.

"Prescribed dose" means—

(i) For gamma stereotactic radiosurgery, the total dose as documented in the written directive;

(ii) For teletherapy, the total dose and dose per fraction as documented in the written directive;

(iii) For manual brachytherapy, either the total source strength and exposure time or the total dose, as documented in the written directive; or

(iv) For remote brachytherapy afterloaders, the total dose and dose per fraction as documented in the written directive.

"Primary protective barrier"(See “Protective barrier”).

"Probabilistic effect" (See “Stochastic effect”).

"Professional practice" means the practice of medicine, dentistry, podiatry, osteopathy, chiropractic or veterinary medicine.

"Professional practitioner" means any person licensed or otherwise authorized under the New York State Education Law to practice a professional practice.

"Protective garment" means an apron, glove, thyroid shield or other protective barrier worn by a professional practitioner or licensed radiographic technologist or patient made of radiation attenuating material(s), used to reduce radiation exposure.

"Protective barrier" means a barrier of radiation absorbing material(s) used to reduce radiation exposure. The types of protective barriers are as follows:

(i) "Primary protective barrier" means the material, excluding filters, placed in the useful beam, for protection purposes, to reduce the radiation exposure.

(ii) "Secondary protective barrier" means a barrier sufficient to attenuate the stray radiation to the required degree.

"Protective glove" means a glove made of radiation attenuating material(s) used to reduce radiation exposure.

"Pulsed dose-rate remote afterloader" means a special type of remote afterloading brachytherapy device that uses a single source capable of delivering dose rates in the "high dose-rate" range, but—

(i) Is approximately one-tenth of the activity of typical high dose-rate remote afterloader sources; and

(ii) Is used to simulate the radiobiology of a low dose-rate treatment by inserting the source for a given fraction of each hour.

"Pyrophoric liquid" means any liquid that ignites spontaneously in dry or moist air at or below 54.4°C (130°F). A pyrophoric solid is any solid material, other than one classed as an explosive,

which under normal conditions is liable to cause fires through friction, retained heat from manufacturing or processing, or which can be ignited readily and, when ignited, burns so vigorously and persistently as to create a serious transportation, handling, or disposal hazard. Included are spontaneously combustible and water-reactive materials.

"Qualified expert" means an individual having the knowledge and training to measure ionizing radiation, to evaluate safety techniques, and to advise regarding radiation protection needs, e.g., individuals certified in the appropriate field by the American Board of Radiology or the American Board of Health Physics, or those having equivalent qualifications. With reference to the calibration of radiation therapy equipment, an individual having, in addition to the above qualifications, training and experience in the clinical applications of radiation physics to radiation therapy, e.g., individuals certified by the American Board of Medical Physics or in therapeutic Radiological Physics or X-Ray and Radium Physics by the American Board of Radiology.

"Quality factor" (Q) means the modifying factor that is used to derive dose equivalent from absorbed dose.

(i) As used in this Code, the quality factors for converting absorbed dose to dose equivalent are shown in Table 1.

Table 1
Quality Factors and Absorbed Dose Equivalents

Type of Radiation	Quality Factor (Q)	Absorbed Dose Equal to a Unit Dose Equivalent*
X, gamma, or beta radiation and high-speed electrons	1	1
Alpha particles, multiple-charged particles, fission fragments and heavy particles of unknown charge	20	0.05
Neutrons of unknown energy	10	0.1
High-energy protons	10	0.1

*Absorbed dose in gray equal to 1 Sv or the absorbed dose in rad equal to 1 rem.

(ii) If it is more convenient to measure the neutron fluence rate than to determine the neutron dose equivalent rate in sievert per hour or rem per hour, as provided in Table 1, 0.01 Sv (1 rem) of neutron radiation of unknown energies may, for purposes of this Code, be assumed to result from a total fluence of 25 million neutrons per square centimeter incident upon the body. If sufficient information exists to estimate the approximate energy distribution of the neutrons, the licensee or registrant may use the fluence rate per unit dose equivalent or the appropriate Q value from Table 2 to convert a measured tissue dose in gray or rad to dose equivalent in sievert or rem.

Table 2
Mean Quality Factors, Q, and Fluence per Unit Dose Equivalent for Monoenergetic Neutrons

	Neutron Energy (MeV)	Quality Factor[a] (Q)	Fluence per Unit Dose Equivalent[b] (neutrons cm^{-2} rem^{-1})	Fluence per Unit Dose Equivalent[b] (neutrons cm^{-2} Sv^{-1})
(thermal)	2.5E-8	2	980E6	980E8
	1E-7	2	980E6	980E8
	1E-6	2	810E6	810E8
	1E-5	2	810E6	810E8
	1E-4	2	840E6	840E8
	1E-3	2	980E6	980E8
	1E-2	2.5	1010E6	1010E8
	1E-1	7.5	170E6	170E8
	5E-1	11	39E6	39E8
	1	11	27E6	27E8
	2.5	9	29E6	29E8
	5	8	23E6	23E8
	7	7	24E6	24E8
	10	6.5	24E6	24E8
	14	7.5	17E6	17E8
	20	8	16E6	16E8
	40	7	14E6	14E8
	60	5.5	16E6	16E8
	1E2	4	20E6	20E8
	2E2	3.5	19E6	19E8
	3E2	3.5	16E6	16E8
	4E2	3.5	14E6	14E8

[a] Value of quality factor (Q) at the point where the dose equivalent is maximum in a 30-centimeter diameter cylinder tissue-equivalent phantom.
[b] Monoenergetic neutrons incident normally on a 30-centimeter diameter cylinder tissue-equivalent phantom.

"Quarter" (See “Calendar Quarter”).

"Rad" means the special unit of absorbed dose. One rad is equal to an absorbed dose of 100 ergs per gram or 0.01 joule per kilogram (0.01 gray).

"Radiation" means alpha particles, beta particles, gamma rays, x rays, neutrons, high-speed electrons, high-speed protons, and other particles capable of producing ions. For purposes of this Code, ionizing radiation is an equivalent term. Radiation, as used in this Code, does not include non-ionizing radiation, such as radiowaves or microwaves, visible, infrared, or ultraviolet light.

"Radiation area" means any area, accessible to individuals, in which radiation levels could result in an individual receiving a dose equivalent in excess of 0.05 mSv (0.005 rem) in 1 hour at 30 centimeters (12 inches) from the source of radiation or from any surface that the radiation penetrates.

"Radiation detector" means a device which in the presence of radiation provides a signal or other indication suitable for use in measuring one or more quantities of incident radiation.

"Radiation dose" (See “Dose”).

"Radiation equipment" means any equipment or device which can emit radiation by virtue of the application thereto of high voltage.

"Radiation installation" means any place or facility, including vehicles such as a van or truck, where:

(i) radiation equipment, in operable condition or assembles and intended to be used, is located or used; or

(ii) radioactive material is transferred, received, produced, possessed or used.

Such installation shall include generally a hospital; medical, dental, chiropractic, osteopathic, podiatric, or veterinarian institution, clinic or office; van or truck providing services at non-permanent locations; educational institution; commercial, private or research laboratory performing diagnostic procedures or handling equipment or material for medical use; or any trucking, storage, messenger or delivery service establishment. Radiation installation shall include, whether or not it is specifically stated above, any place, facility or vehicle such as a van or truck where radiation is applied intentionally to a human. The limits of the radiation installation shall be as designated by the operator.

"Radiation machine" means any device capable of producing radiation except those devices with radioactive material as the only source of radiation.

"Radiation safety officer" means an individual who:

(i) Meets the requirements in §§175.103(j)(1)(i) and 175.103(j)(15) of this Code; or

(ii) Is identified as a Radiation Safety Officer on—

(A) A specific medical use license issued by the Department, the Commission or Agreement State; or

(B) A medical use permit issued by a Commission master material licensee.

"Radiation source" means any radioactive material or any radiation equipment.

"Radiation therapy physicist" means the individual identified as the qualified radiation therapy physicist on a Department license or certified registration.

"Radiation therapy simulation system" means a radiographic or fluoroscopic x-ray system intended for localizing the volume to be exposed during radiation therapy and confirming the position and size of the therapeutic irradiation field.

"Radioactive material" means any solid, liquid, or gas which emits radiation spontaneously.

"Radioactive material site" means a location, or contiguous and adjacent locations, under a single license in which radioactive materials are authorized to be received, produced, used, possessed (stored), or transferred and in which a specific use of said radioactive materials may be evaluated by a single set of Departmental inspection criteria concerning the procedures, equipment or shielding utilized by the licensee.

"Radioactivity" means the transformation of unstable atomic nuclei by the emission of radiation.

"Radiobioassay" (See “Bioassay”).

"Rated line voltage" means the range of potentials, in volts, of the supply line specified by the manufacturer at which the x-ray machine is designed to operate.

"Rated output current" means the maximum allowable load current of the x-ray high-voltage generator.

"Rated output voltage" means the allowable peak potential, in volts, at the output terminals of the x-ray high-voltage generator.

"Rating" means the operating limits specified by the manufacturer.

"Recordable therapy medical event" means the administration of:

(i) an activity of a therapeutic radiopharmaceutical or radiobiologic differing from the prescribed activity by more than 10 percent;

(ii) a therapeutic radiation dose from any source other than a radiopharmaceutical, radiobiologic or brachytherapy source such that errors in computation, calibration, time of exposure, treatment geometry or equipment malfunction result in a calculated total treatment dose differing from the final prescribed total treatment dose ordered by more than 10 percent;

(iii) a therapeutic radiation dose from a brachytherapy source such that errors in computation, calibration, treatment time, source activity, source placement or equipment malfunction result in a calculated total treatment dose differing from the final total treatment dose ordered by more than 10 percent; but in which the percentage error in all cases is equal to or less than 20 percent.

"Recording" means producing a permanent form of an image resulting from x-ray photons (e.g., film, video tape).

"Reference Man" means a hypothetical aggregation of human physical and physiological characteristics determined by international consensus. These characteristics may be used by researchers and public health workers to standardize results of experiments and to relate biological insult to a common base.

"Registrant" means any person who is registered with the Department or who is legally obligated to register with the Department pursuant to this Code.

"Registration" means registration with the Department in accordance with this Code.

"Rem" means the special unit of any of the quantities expressed as dose equivalent. The dose equivalent in rem is equal to the absorbed dose in rad multiplied by the quality factor. One rem is equal to 0.01 sievert.

"Research and development" means:

(i) theoretical analysis, exploration, or experimentation; or

(ii) the extension of investigative findings and theories of a scientific or technical nature into practical application for experimental and demonstration purposes, including the experimental production and testing of models, devices, equipment, materials, and processes.

Research and development does not include the internal or external administration of radiation or radioactive material to human beings.

"Residual radioactivity" means radioactivity in structures, materials, soils, groundwater, and other media at a site resulting from activities under the licensee's control. This includes radioactivity from all licensed and unlicensed sources used by the licensee, but excludes background radiation. It also includes radioactive materials remaining at the site as a result of routine or accidental releases of radioactive material at the site and previous burials at the site, even if those burials were made in accordance with the provisions of 10 CFR Part 20.

"Respiratory protective equipment" means an apparatus, such as a respirator, used to reduce an individual's intake of airborne radioactive materials.

"Response time" means the time required for an instrument system to reach 90 percent of its final reading when the radiation-sensitive volume of the instrument system is exposed to a step change in radiation flux from zero sufficient to provide a steady state midscale reading.

"Restricted area" means an area, access to which is limited by the licensee or registrant for the purpose of protecting individuals against undue risks from exposure to sources of radiation. A restricted area does not include any area used as residential quarters, but separate rooms in a residential building may be set apart as a restricted area.

"Roentgen" means the special unit of exposure. One roentgen (R) equals 2.58E-4 coulomb per kilogram of air (see "Exposure").

"Sanitary sewerage" means a system of public sewers for carrying off waste water and refuse, but excluding sewage treatment facilities, septic tanks, and leach fields owned or operated by the licensee or registrant.

"Scattered radiation" means radiation that, during passage through matter, has been deviated in direction. (The radiation also may have been modified by a decrease in energy.)

"Sealed source" means any byproduct material that is encased in a capsule designed to prevent leakage or escape of the byproduct material.

"Sealed Source and Device Registry" means the national registry that contains all the registration certificates, generated by both NRC and the Agreement States, that summarize the radiation safety information for the sealed sources and devices and describe the licensing and use conditions approved for the product.

"Secondary protective barrier" (See “Protective barrier”).

"Shallow dose equivalent" (H_s), which applies to the external exposure of the skin of the whole body or the skin of an extremity, means the dose equivalent at a tissue depth of 0.007 centimeter (7 mg/cm^2).

"Shutter" means a device attached to the tube housing assembly which can totally intercept the useful beam and which has a lead equivalency not less than that of the tube housing assembly.

"SI" means the abbreviation for the International System of Units (Systeme Internationale).

"Sievert" means the SI unit of any of the quantities expressed as dose equivalent. The dose equivalent in sievert is equal to the absorbed dose in gray multiplied by the quality factor. One sievert is equal to 100 rem.

"Site boundary" means that line beyond which the land or property is not owned, leased, or otherwise controlled by the licensee or registrant.

"Source" means, for the purposes of radiation equipment, the focal spot of the x-ray tube.

"Source-image receptor distance (SID)" means the distance from the source to the center of the input surface of the image receptor.

"Source material" means:

(i) Uranium or thorium, or any combination thereof, in any physical or chemical form; or

(ii) Ores that contain by weight one-twentieth of 1 percent (0.05 percent) or more of uranium, thorium or any combination of uranium and thorium. Source material does not include special nuclear material.

"Source material milling" means any activity that results in the production of byproduct material as defined in §175.02(a)(33)(ii).

"Source of radiation" means any radioactive material or any device or equipment emitting, or capable of producing, radiation.

"Source-skin distance or source-surface distance (SSD)" means the distance measured along the central ray from the center of the front surface of the source of the x-ray focal spot or sealed radioactive source to the surface of the irradiated object.

"Special form radioactive material" means radioactive material which satisfies the following conditions:

(i) it is either a single solid piece or is contained in a sealed capsule that can be opened only by destroying the capsule;

(ii) the piece or capsule has at least one dimension not less than 5 mm (0.2 inch); and

(iii) it satisfies the requirements of 10 CFR 71.75. A special form encapsulation designed in accordance with the requirements of 10 CFR 71.4 in effect on June 30, 1983, (see 10 CFR Part 71, revised as of January 1, 1983), and constructed prior to July 1, 1985, and a special form encapsulation designed in accordance with the requirements of 10 CFR 71.4 in effect on March 31, 1996, (see 10 CFR Part 71, revised as of January 1, 1983), and constructed before April 1, 1998, may continue to be used. Any other special form encapsulation must meet the specifications of this definition.

"Special nuclear material" means:

(i) Plutonium, uranium-233, uranium enriched in the isotope 233 or in the isotope 235, and any other material that the U.S. Nuclear Regulatory Commission, pursuant to the provisions of section 51 of the Atomic Energy Act of 1954, as amended, determines to be special nuclear material, but does not include source material; or

(ii) Any material artificially enriched by any of the foregoing, but does not include source material.

"Special nuclear material in quantities not sufficient to form a critical mass" means uranium enriched in the isotope U-235 in quantities not exceeding 350 grams of contained U-235; uranium-233 in quantities not exceeding 200 grams; plutonium in quantities not exceeding 200 grams; or any combination of them in accordance with the following formula: For each kind of special nuclear material, determine the ratio between the quantity of that special nuclear material and the quantity specified above for the same kind of special nuclear material. The sum of such ratios for all of the kinds of special nuclear material in combination shall not exceed 1. For example, the following quantities in combination would not exceed the limitation and are within the formula:

$$\frac{175 \text{ (grams contained U–235)}}{350} + \frac{50 \text{ (grams U–233)}}{200} + \frac{50 \text{ (grams Pu)}}{200} = 1$$

"Specific activity" of a radionuclide means the radioactivity of a radionuclide per unit mass of that nuclide. The specific activity of a material in which the radionuclide is essentially uniformly distributed is the radioactivity per unit mass of the material.

"State" means the State of New York, unless the context of this Code clearly indicates that a different meaning is intended.

"Stereotactic radiosurgery" means the use of external radiation in conjunction with a stereotactic guidance device to very precisely deliver a therapeutic dose to a tissue volume.

"Stochastic effect" means a health effect that occurs randomly and for which the probability of the effect occurring, rather than its severity, is assumed to be a linear function of dose without threshold. Hereditary effects and cancer incidence are examples of stochastic effects. For purposes of this Code, "probabilistic effect" is an equivalent term.

"Stray radiation" means the sum of leakage and scattered radiation.

"Structured educational program" means an educational program designed to impart particular knowledge and practical education through interrelated studies and supervised training.

"Supervision" means:

(i) for radioactive materials licenses which do not authorize human use, the training of persons in the use of radioactive materials in other than medical procedures. Such training shall include at least thirty (30) hours of instruction in the principles and practices of radiation protection, radioactivity measurement, standardization and monitoring techniques and instruments, mathematics and calculations basic to the use and measurement of radioactivity, and biological effects of radiation; and

(ii) for radioactive materials licenses which do authorize human use

(A) the training of a physician in the use of radioactive materials in the clinical treatment or diagnosis of disease. Such training shall provide that specified in §175.103(j) of this Code, as applicable.

(B) the oversight of a licensed radiologic technologist by a licensed practitioner acting within the limits specified in the law under which the practitioner is licensed.

(iii) "Direct supervision" means a physician shall be present in the section of the facility where the procedure is being performed and is not concurrently encumbered by responsibilities that would preclude the physician from responding to a request for assistance within a timeframe that poses no risk to the patient. The physician shall be immediately available to furnish assistance and direction throughout the performance of the procedure, and is professionally responsible for the performance of the procedure. Direct supervision does not mean that the physician shall be present in the room when the procedure is performed.

(iv) "Personal supervision" means the physician shall be in attendance in the room during the performance of the procedure.

"Survey" means an evaluation of the radiological conditions and potential hazards incident to the production, use, transfer, release, disposal, or presence of sources of radiation. When appropriate, such evaluation includes, but is not limited to, tests, physical examinations, and measurements of levels of radiation or concentrations of radioactive material present.

"Technique factors" means the conditions of operation of radiation equipment. They are specified as follows:

(i) For capacitor energy storage equipment, peak tube potential in kV and quantity of charge in mAs.

(ii) For field emission equipment rated for pulsed operation, peak tube potential in kV and number of x-ray pulses.

(iii) For CT x-ray systems designed for pulsed operation, peak tube potential in kV, scan time in seconds, and either tube current in mA, x-ray pulse width in seconds, and the number of x-ray pulses per scan, or the product of tube current, x-ray pulse width, and the number of x-ray pulses in mAs;

(iv) For CT x-ray systems not designed for pulsed operation, peak tube potential in kV, and either tube current in mA and scan time in seconds, or the product of tube current and exposure time in mAs and the scan time when the scan time and exposure time are equivalent; and

(v) For all other equipment, peak tube potential in kV, and either tube current in mA and exposure time in seconds, or the product of tube current and exposure time in mAs.

"Teletherapy" means a method of radiation therapy in which the source (sources) of radiation is (are) collimated gamma rays are delivered at a distance from the patient or human research subject. For the purposes of this Code "external beam radiation therapy" is an equivalent term.

"Temporary job site" means a location where mobile medical services are conducted other than those location(s) of use authorized on the license.

"Test" means the process of verifying compliance with an applicable regulation.

"Therapeutic-type protective tube housing" means:

(i) for x-ray therapy equipment not capable of operating at 500 kVp or above, the following definition applies: An x-ray tube housing so constructed that the leakage radiation averaged over any 100 cm^2 (15.5 $inches^2$) at a distance of 1 meter (3 feet) from the source does not exceed 2.58 E-4 C-kg^{-1} (1 roentgen) in an hour when the tube is operated at its maximum rated continuous current for the maximum rated tube potential.

(ii) For x-ray therapy equipment capable of operation at 500 kVp or above, the following definition applies: An x-ray tube housing so constructed that the leakage radiation averaged over an 100 cm^2 (15.5 $inches^2$) area at a distance of 1 meter (3 feet) from the source does not exceed 0.10 percent of the useful beam dose rate at 1 meter (3 feet) from the source for any of its operating conditions.

"Therapeutic dosage" means a dosage of unsealed byproduct material that is intended to deliver a radiation dose to a patient or human research subject for palliative or curative treatment.

"Therapeutic dose" means a radiation dose delivered from a source containing byproduct material to a patient or human research subject for palliative or curative treatment.

"This Code" means Article 175 and all other parts of the New York City Health Code applicable to licensees and registrants or other persons subject to the provisions of Article 175.

"Total effective dose equivalent" (TEDE) means the sum of the effective dose equivalent and the committed effective dose equivalent.

"Total organ dose equivalent" (TODE) means the sum of the dose equivalent and the committed dose equivalent to the organ receiving the highest dose as described in §175.03(k)(7)(i)(F) of this Code.

"Traceable to a national standard" means that a quantity or a measurement has been compared to a national standard directly or indirectly through one or more intermediate steps and that all comparisons have been documented.

"Transport index (TI)" means the dimensionless number, rounded up to the next tenth, placed on the label of a package to designate the degree of control to be exercised by the carrier during transportation. The transport index is determined by multiplying the maximum radiation level in millisievert (mSv) per hour at 1 meter (3.3ft) from the external surface of the package by 100 (equivalent to the maximum radiation level in millirem per hour at 1 meter (3.3 ft)).

"Treatment site" means the anatomical description of the tissue intended to receive a radiation dose, as described in a written directive.

"Tube housing assembly" means the tube housing with tube installed. It includes high-voltage and/or filament transformers and other appropriate elements when they are contained within the tube housing.

"Tube rating chart" means the set of curves which specify the rated limits of operation of the tube in terms of the technique factors.

"Type A package" means a packaging that, together with its radioactive contents limited to A_1 or A_2 as appropriate, meets the requirements of U.S. DOT 49 CFR 173.410 and 173.412 and is designed to retain the integrity of containment and shielding required by this part under normal conditions of transport as demonstrated by the tests set forth in 49 CFR 173.465 or 173.466, as appropriate.

"Type A quantity" means a quantity of radioactive material, the aggregate radioactivity of which does not exceed A_1 for special form radioactive material or A_2 for normal form radioactive material. A_1 and A_2 are given in Appendix A of §175.105 or may be determined by procedures described in such Appendix A.

"Type B quantity" means a quantity of radioactive material greater than a Type A quantity.

"Type of use" means use of byproduct material under §§10 CFR 35.100; 35.200; 35.300; 35.400; 35.500; 35.600; or 35.1000.

"Unit dosage" means a dosage prepared for medical use for administration as a single dosage to a patient or human research subject without any further manipulation of the dosage after it is initially prepared.

"U.S. Department of Energy" means the Department of Energy established by Public Law 95-91, August 4, 1977, 91 Stat. 565, 42 U.S.C. 7101 et seq., to the extent that the Department exercises functions formerly vested in the U.S. Atomic Energy Commission, its Chairman, members, officers and components and transferred to the U.S. Energy Research and Development Administration and to the Administrator thereof pursuant to sections 104(b), (c) and (d) of the Energy Reorganization Act of 1974 (Public Law 93-438, October 11, 1974, 88 Stat. 1233 at 1237, 42 U.S.C. 5814, effective January 19, 1975) and retransferred to the Secretary of Energy pursuant to section 301(a) of the Department of Energy Organization Act (Public Law 95-91, August 4, 1977, 91 Stat. 565 at 577-578, 42 U.S.C. 7151, effective October 1, 1977.)

"Unrefined and unprocessed ore" means ore in its natural form prior to any processing, such as grinding, roasting, beneficiating, or refining.

"Unrestricted area" means an area, access to which is not controlled by the licensee or registrant for purposes of radiation protection.

"Use" as used in radioactive materials licenses means to employ or apply radioactive materials for the licensed purpose. It shall include instruction of, and responsibility for, technical and support staff members. It does not include training others in the techniques of use of radioactive materials for the purpose of qualifying for licensure.

In licenses authorizing medical use of radioactive materials, "use" shall also include:

(i) ordering or directing the administration of radiation or radioactive materials to humans, including the method or route of administration;

(ii) actual use of, or direction of technologists or other paramedical personnel in the use of, radioactive material;

(iii) interpretation of results of diagnostic procedures; and

(iv) regular review of the progress of patients receiving therapy and modification of the originally prescribed dose as warranted by the patient's reaction to radiation therapy.

"Useful beam" means the radiation emanating from the tube housing port or the radiation head and passing through the aperture of the beam limiting device when the exposure controls are in a mode to cause the system to produce radiation.

"Variable-aperture beam-limiting device" means a beam-limiting device which has capacity for stepless adjustment of the x-ray field size at a given SID.

"Very high radiation area" means an area, accessible to individuals, in which radiation levels from radiation sources external to the body could result in an individual receiving an absorbed dose in excess of 5 Gy (500 rad) in 1 hour at 1 meter from a radiation source or 1 meter from any surface that the radiation penetrates.

"Visible area" means that portion of the input surface of the image receptor over which incident x-ray photons produce a visible image.

"Waste" means those low-level radioactive wastes containing source, special, or byproduct material that are acceptable for disposal in a land disposal facility. For the purposes of this definition, low-level radioactive waste means radioactive waste not classified as high-level radioactive waste, transuranic waste, spent nuclear fuel, or byproduct material as defined in subparagraphs (ii), (iii) and (iv) of the definition of “Byproduct material” set forth in this section.

"Waste handling licensees" mean persons licensed to receive and store radioactive wastes prior to disposal and/or persons licensed to dispose of radioactive waste.

"Week" means 7 consecutive days starting on Sunday.

"Weighting factor" w_T for an organ or tissue (T) means the proportion of the risk of stochastic effects resulting from irradiation of that organ or tissue to the total risk of stochastic effects when the whole body is irradiated uniformly. For calculating the effective dose equivalent, the values of W_T are:

Organ Dose Weighting Factors

Organ or Tissue	W_T
Gonads	0.25
Breast	0.15
Red bone marrow	0.12
Lung	0.12
Thyroid	0.03
Bone surfaces	0.03
Remainder	0.30[a]
Whole Body	1.00[b]

[a] 0.30 results from 0.06 for each of 5 "remainder" organs, excluding the skin and the lens of the eye, that receive the highest doses.

[b] For the purpose of weighting the external whole body dose, for adding it to the internal dose, a single weighting factor, $w_T = 1.0$, has been specified. The use of other weighting factors for external exposure will be approved on a case-by-case basis until such time as specific guidance is issued.

"Whole body" means, for purposes of external exposure, head, trunk (including male gonads), arms above the elbow, or legs above the knee.

"Worker" means an individual engaged in work under a license or registration issued by the Department and controlled by a licensee or registrant, but does not include the licensee or registrant.

"Working level" (WL) means any combination of short-lived radon daughters in 1 liter of air that will result in the ultimate emission of 1.3E5 MeV of potential alpha particle energy. The short-lived radon daughters are:

(i) for radon-222: polonium-218, lead-214, bismuth-214, and polonium-214; and

(ii) for radon-220: polonium-216, lead-212, bismuth-212, and polonium-212.

"Working level month" (WLM) means an exposure to 1 working level for 170 hours (2,000 working hours per year divided by 12 months per year is approximately equal to 170 hours per month).

"Written directive" means an authorized user's written order for the administration of byproduct material or radiation from byproduct material to a specific patient or human research subject, as specified in §175.103(b)(6) of this Code.

"X-ray control" means a device which controls input power to the x-ray high-voltage generator and/or the x-ray tube. It includes equipment such as timers, phototimers, automatic brightness stabilizers, and similar devices, which control the technique factors of an x-ray exposure.

"X-ray equipment" means an x-ray system, subsystem, or component thereof. Types of x-ray equipment are as follows:

(i) "Mobile x-ray equipment" means x-ray equipment mounted on a permanent base with wheels and/or casters for moving while completely assembled.

(ii) "Portable x-ray equipment" means x-ray equipment designed to be hand carried.

(iii) "Stationary x-ray equipment" means x-ray equipment which is installed in a fixed location.

"X-ray field" means that area of the intersection of the useful beam and any one of the set of planes parallel to and including the plane of the image receptor, whose perimeter is the locus of points at which the exposure rate is one-fourth of the maximum in the intersection.

"X-ray high-voltage generator" means a device which transforms electrical energy from the potential supplied by the x-ray control to the tube operating potential. The device may also include means for transforming alternating current to direct current, filament transformers for the x-ray tube(s), high-voltage switches, electrical protective devices, and other appropriate elements.

"X-ray system" means an assemblage of components for the controlled production of x-rays. It includes minimally an x-ray high-voltage generator, an x-ray control, a tube housing assembly, a beam-limiting device, and the necessary supporting structures. Additional components which function with the system are considered integral parts of the system.

"X-ray subsystem" means any combination of two or more components of an x-ray system for which there are requirements specified in this Article.

"X-ray tube" means any electron tube which is designed for the conversion of electrical energy into x-ray energy. For the purposes of permit fee requirements in Article 5 of this Code, an x-ray tube means any electrical device which produces x-rays of intensity exceeding 1.29 E-4 $C\text{-}kg^{-1}$ (0.5 milliroentgen) per hour when measured 5 centimeters (2 inches) from any accessible surface thereof, and averaged over an area of 10 cm^2 (1.55 square inches).

"Year" means the period of time beginning in January used to determine compliance with the provisions of this Code. The licensee or registrant may change the starting date of the year used to determine compliance by the licensee or registrant provided that the change is made at the beginning of the year and that no day is omitted or duplicated in consecutive years.

§175.03 Standards for protection against radiation.

(a) *General provisions.* (1) *Purpose.* (i) This section establishes standards for protection against ionizing radiation resulting from activities conducted pursuant to licenses, certified registrations and/or registrations issued by the Department.

(ii) The requirements of this Code are designed to control the receipt, production, possession, use, transfer, and disposal of sources of radiation by any licensee or registrant so the total dose to an individual, including doses resulting from all sources of radiation other than background radiation, does not exceed the standards for protection against radiation prescribed in this section. However, nothing in this section shall be construed as limiting actions that may be necessary to protect health and safety.

(2) *Scope.* Except as specifically provided otherwise by this Code, this section applies to persons subject to licensure, certified registration or registration by the Department to receive, produce, possess, use, transfer, or dispose of sources of radiation. The limits in this section do not apply to doses due to background radiation, to exposure of patients to radiation for the purpose of medical diagnosis or therapy, or to voluntary participation in medical research programs.

(3) *Implementation.* (i) Any existing license, certified registration or registration condition that is more restrictive than the provisions in this section remains in force until there is an amendment or renewal of the license, certified registration or registration.

(ii) If a license, certified registration or registration condition exempts a licensee or registrant from a provision of this Code in effect on or before the effective date of this Code, it also exempts the licensee or registrant from the corresponding provision of this section.

(iii) If a license, certified registration or registration condition cites provisions of this Code in effect prior to the effective date of this Code, which do not correspond to any provisions of this section, the license, certified registration or registration condition remains in force until there is an amendment or renewal of the license, certified registration or registration that modifies or removes this condition.

(b) *Radiation protection programs.* (1) *Radiation Protection Programs.* Each person who operates or permits the operation of a radiation installation or who operates, transfers, receives, produces, possesses or uses, or permits the operation, transfer, receipt, production, possession or use of any radiation source shall:

(i) use, to the extent practicable, procedures and engineering controls based upon sound radiation protection principles to achieve occupational doses and doses to members of the public that are as low as is reasonably achievable (ALARA) below the limits specified in this Code;

(ii) develop, document, and implement a radiation protection program commensurate with the scope and extent of the program and sufficient to ensure compliance with the provisions of this Code;

(iii) provide a radiation safety officer pursuant to §175.03(b)(2) who shall be delegated authority to ensure the implementation of this radiation protection program. For licensed radioactive materials installations the radiation safety officer, or an authorized user designated to act as the radiation safety officer in the radiation safety officer's absence, shall be present on the premises at least 50 percent of the time that radioactive material is being handled or equipment containing radioactive material is being operated;

(iv) provide for a radiation safety committee to administer the radiation protection program in medical centers, hospitals and institutions of higher education. The committee shall include the facility operator or a person with the authority to act on behalf of the facility operator, and representation from departments within the facility where radiation sources are used. The committee shall oversee all uses of radiation-producing equipment and radioactive materials within the facility, shall review the activities of the radiation safety officer, and shall review the radiation safety program at least annually. The committee, or a subcommittee, shall oversee the administration of a quality assurance program as required by §175.03(b)(1)(v);

(v) provide a quality assurance program for diagnostic and therapeutic uses of radiation-producing equipment and radioactive materials pursuant to §175.07 and other applicable provisions of this Code;

(vi) ensure that all personnel involved in planning for or administering radiation doses to humans, or in the use of radiation-producing equipment or radioactive materials for other

purposes, are supervised, are instructed as described in §175.04(c) and are competent to safely use such radiation sources and services;

(vii) ensure that radiation equipment is used only for those procedures for which it is designed;

(viii) ensure that acceptance testing, by an individual competent to perform such testing, is performed on all medical and chiropractic diagnostic equipment and radiation therapy treatment and planning equipment before the first use of such equipment on humans; and

(ix) review the radiation protection program content and implementation at intervals not to exceed twelve months.

(2) *Radiation protection program changes.*

(i) A licensee may revise its radiation protection program without Departmental approval if—

(A) The revision does not require a license amendment under §175.103(a)(7) of this Code;

(B) The revision is in compliance with the regulations and the license;

(C) The revision has been reviewed and approved by the Radiation Safety Officer and licensee management; and

(D) The affected individuals are instructed on the revised program before the changes are implemented.

(ii) A licensee shall retain a record of each change in accordance with §175.03(k)(4) of this Code.

(3) *Radiation safety officer.* The radiation safety officer specified in §175.03(b)(1)(iii) shall be:

(i) For human use radiation equipment installations:

(A) a physicist certified by the American Board of Health Physics, the American Board of Radiology or the American Board of Medical Physics in a branch of physics related to the type of use of radiation sources in the installation; or

(B) a person satisfying the radiation safety officer qualifications set forth in §175.103(j) of this Code; or

(C) a professional practitioner as defined in §175.02(a)(157), practicing within such person's professional practice as defined in §175.02(a)(156).

(ii) For human use radiation equipment installations requiring a certified registration pursuant to §175.64:

(A) a physicist certified by the American Board of Health Physics, the American Board of Radiology or the American Board of Medical Physics in a branch of physics related to the type of use of radiation sources in the installation; or

(B) a person satisfying the radiation safety officer qualifications set forth in §175.103(j) of this Code; or

(C) an authorized user named on the facility's certified registration issued by the Department.

(iii) For non-human use radiation equipment installations:

(A) a veterinarian for veterinary installations; or

(B) a physicist certified by the American Board of Health Physics, the American Board of Radiology or the American Board of Medical Physics; or

(C) a person with equivalent training and experience as determined by the Department; or

(D) a researcher determined by the institution as qualified by training and experience for installations using only x-ray diffraction and fluorescence analysis equipment.

(iv) For non-human use radioactive materials installations:

(A) a physicist certified by the American Board of Health Physics, the American Board of Radiology or the American Board of Medical Physics in a branch of physics related to the type and use of radioactive material in the installation; or

(B) a person with equivalent training and experience as determined by the Department; or

(C) an authorized user named on the radioactive materials license issued by the Department.

(c) *Occupational dose limits.* (1) *Occupational dose limits for adults.*

(i) Except for planned special exposures pursuant to §175.03(c)(6), the licensee or registrant shall control the occupational dose to any individual adult from licensed or registered activities to ensure that such dose does not exceed:

(A) an annual limit, which is the lesser of:

(a) a total effective dose equivalent of 0.05 Sv (5 rem); or

(b) the sum of the deep dose equivalent and the committed dose equivalent to any individual organ or tissue, other than the lens of the eye, equal to 0.5 Sv (50 rem); and

(B) annual limits to the lens of the eye, to the skin of the whole body, and to the skin of the extremities of:

(a) a lens dose equivalent of 0.15 Sv (15 rem), and

(b) a shallow dose equivalent of 0.5 Sv (50 rem) to the skin of the whole body or to the skin of any extremity.

(ii) Doses received in excess of the annual limits, including doses received during accidents, emergencies, and planned special exposures, shall be subtracted from the limits for planned special exposures that the individual may receive during the current year and during the individual's lifetime.

(iii) When the external exposure is determined by measurement with an external personal monitoring device, the deep-dose equivalent must be used in place of the effective dose equivalent, unless the effective dose equivalent is determined by a dosimetry method approved by the Department. The assigned deep dose equivalent must be for the part of the body receiving the highest exposure. The assigned shallow dose equivalent must be the dose averaged over the contiguous 10 square centimeters of skin receiving the highest exposure:

(A) the deep dose equivalent, lens dose equivalent and shallow dose equivalent may be assessed from surveys or other radiation measurements for the purpose of demonstrating compliance with the occupational dose limits, if the individual monitoring device was not in the region of highest potential exposure, or the results of individual monitoring are unavailable; or

(B) when a protective garment is worn during x-ray fluoroscopic procedures to be in compliance with §175.62(i) of this Code and monitoring is conducted as specified in §175.03(f)(2)(ii), the effective dose equivalent for external radiation may be determined for these individuals as follows:

(a) when only one individual monitoring device is used and it is located at the neck outside the protective garment, the reported deep dose equivalent value multiplied by 0.3 shall be the effective dose equivalent for external radiation; or

(b) when individual monitoring devices are worn, both under the protective garment at the waist and outside the protective garment at the neck, the effective dose equivalent for external radiation shall be assigned the value of the sum of the deep dose equivalent reported for the individual monitoring device located at the waist under the protective garment multiplied by 1.5 and the deep dose equivalent reported for the individual monitoring device located at the neck outside the protective garment multiplied by 0.04.

(iv) Derived air concentration (DAC) and annual limit on intake (ALI) values are presented in Table 1 of Appendix B of this section and may be used to determine the individual's dose and to demonstrate compliance with the occupational dose limits.

(v) Notwithstanding the annual dose limits, the licensee shall limit the soluble uranium intake by an individual to 10 milligrams in a week.

(vi) The licensee or registrant shall reduce the dose that an individual may be allowed to receive in the current year by the amount of occupational dose received while employed by any other person.

(2) *Requirements for summation of external and internal doses.* (i) If the licensee or registrant is required to monitor pursuant to both §175.03(f)(2)(i) and (v), the licensee or registrant shall demonstrate compliance with the dose limits by summing external and internal doses. If the licensee or registrant is required to monitor only pursuant to §175.03(f)(2)(i) or only pursuant to §175.03(f)(2)(v), then summation is not required to demonstrate compliance with the dose limits. The licensee or registrant may demonstrate compliance with the requirements for summation of external and internal doses pursuant to §175.03(c)(2)(ii), (iii) and (iv). The dose equivalents for the lens of the eye, the skin, and the extremities are not included in the summation, but are subject to separate limits.

(ii) *Intake by inhalation.* If the only intake of radionuclides is by inhalation, the total effective dose equivalent limit is not exceeded if the sum of the deep dose equivalent divided by the total effective dose equivalent limit, and one of the following, does not exceed unity:

(A) the sum of the fractions of the inhalation ALI for each radionuclide, or

(B) the total number of derived air concentration-hours (DAC-hours) for all radionuclides divided by 2,000, or

(C) the sum of the calculated committed effective dose equivalents to all significantly irradiated organs or tissues (T) calculated from bioassay data using appropriate biological models and expressed as a fraction of the annual limit. For purposes of this requirement, an organ or tissue is deemed to be significantly irradiated if, for that organ or tissue, the product of the weighting factors, w_T, and the committed dose equivalent, $H_{T,50}$, per unit intake is greater than 10 percent of the maximum weighted value of H_{50}, that is, $w_T H_{T,50}$, per unit intake for any organ or tissue.

(iii) *Intake by oral ingestion.* If the occupationally exposed individual also receives an intake of radionuclides by oral ingestion greater than 10 percent of the applicable oral ALI, the licensee or registrant shall account for this intake and include it in demonstrating compliance with the limits.

(iv) *Intake through wounds or absorption through skin.* The licensee or registrant shall evaluate and account for intakes through wounds or skin absorption. The intake through intact skin has been included in the calculation of DAC for hydrogen-3 and does not need to be evaluated or accounted for separately pursuant to §175.03(c)(2)(iv).

(3) *Determination of external dose from airborne radioactive material.*

(i) Licensees, when determining the dose from airborne radioactive material, shall include the contribution to the deep dose equivalent, eye dose equivalent, and shallow dose equivalent from external exposure to the radioactive cloud. (See Appendix B of this section, footnotes 1 and 2.)

(ii) Airborne radioactivity measurements and DAC values shall not be used as the primary means to assess the deep dose equivalent when the airborne radioactive material includes radionuclides other than noble gases or if the cloud of airborne radioactive material is not relatively uniform. The determination of the deep dose equivalent to an individual shall be based upon measurements using instruments or individual monitoring devices.

(4) *Determination of internal exposure.* (i) For purposes of assessing dose used to determine compliance with occupational dose equivalent limits, the licensee shall, when required pursuant to §175.03(f)(2) take suitable and timely measurements of:

(A) concentrations of radioactive materials in air in work areas; or

(B) quantities of radionuclides in the body; or

(C) quantities of radionuclides excreted from the body; or

(D) combinations of these measurements.

(ii) Unless respiratory protective equipment is used, as provided in §175.03(h)(3), or the assessment of intake is based on bioassays, the licensee shall assume that an individual inhales radioactive material at the airborne concentration in which the individual is present.

(iii) When specific information on the physical and biochemical properties of the radionuclides taken into the body or the behavior of the material in an individual is known, the licensee may:

(A) use that information to calculate the committed effective dose equivalent, and, if used, the licensee or registrant shall document that information in the individual's record; and

(B) upon prior approval of the Department, adjust the DAC or ALI values to reflect the actual physical and chemical characteristics of airborne radioactive material, for example, aerosol size distribution or density; and

(C) separately assess the contribution of fractional intakes of Class D, W, or Y compounds of a given radionuclide to the committed effective dose equivalent. (See Appendix B of this section.)

(iv) If the licensee chooses to assess intakes of Class Y material using the measurements given in §175.03(c)(4)(i)(B) or (C), the licensee may delay the recording and reporting of the assessments for periods up to 7 months, unless otherwise required by §175.03(l)(2) or (3). This delay permits the licensee to make additional measurements basic to the assessments.

(v) If the identity and concentration of each radionuclide in a mixture are known, the fraction of the DAC applicable to the mixture for use in calculating DAC-hours shall be either:

(A) the sum of the ratios of the concentration to the appropriate DAC value, that is, D, W, or Y, from Appendix B for each radionuclide in the mixture; or

(B) the ratio of the total concentration for all radionuclides in the mixture to the most restrictive DAC value for any radionuclide in the mixture.

(vi) If the identity of each radionuclide in a mixture is known, but the concentration of one or more of the radionuclides in the mixture is not known, the DAC for the mixture shall be the most restrictive DAC of any radionuclide in the mixture.

(vii) When a mixture of radionuclides in air exists, a licensee may disregard certain radionuclides in the mixture if:

(A) the licensee uses the total activity of the mixture in demonstrating compliance with the dose limits in §175.03(c) and in complying with the monitoring requirements in §175.03(f)(2)(v), and

(B) the concentration of any radionuclide disregarded is less than 10 percent of its DAC, and

(C) the sum of these percentages for all of the radionuclides disregarded in the mixture does not exceed 30 percent.

(viii) When determining the committed effective dose equivalent, the following information may be considered:

(A) In order to calculate the committed effective dose equivalent, the licensee or registrant may assume that the inhalation of one ALI, or an exposure of 2,000 DAC-hours, results in a committed effective dose equivalent of 0.05 Sv (5 rem) for radionuclides that have their ALIs or DACs based on the committed effective dose equivalent.

(B) For an ALI and the associated DAC determined by the nonstochastic organ dose limit of 0.5 Sv (50 rem), the intake of radionuclides that would result in a committed effective dose equivalent of 0.05 Sv (5 rem), that is, the stochastic ALI, is listed in parentheses in Table 1 of Appendix B of this section. The licensee may, as a simplifying assumption, use the stochastic ALI to determine committed effective dose equivalent. However, if the licensee or registrant uses the stochastic ALI, the licensee or registrant shall also demonstrate that the limit in §175.03(c)(1)(i)(A) is met.

(5) *Determination of prior occupational dose.* (i) For each individual who may enter the licensee's or registrant's restricted area and is likely to receive an annual occupational dose requiring monitoring pursuant to §175.03(f)(2), the licensee or registrant shall:

(A) determine the occupational radiation dose received during the current year; and

(B) request, in writing, the records of lifetime cumulative occupational radiation dose.

(ii) Prior to permitting an individual to participate in a planned special exposure, the licensee or registrant shall determine:

(A) the internal and external doses from all previous planned special exposures; and

(B) all doses in excess of the limits (including doses during accidents and emergencies), received during the lifetime of the individual; and

(C) all lifetime cumulative occupational radiation doses.

(iii) In complying with the requirements of subparagraphs (i) or (ii) of this paragraph, a licensee or registrant may:

(A) accept, as a record of the occupational dose that the individual received during the current year, a written signed statement from the individual, or from the individual's most recent employer for work involving radiation exposure, that discloses the nature and the amount of any occupational dose that the individual may have received during the current year; and

(B) accept, as the record of lifetime cumulative radiation dose, an up-to-date form RAD-4, "Cumulative Occupational Radiation Exposure History," or equivalent, signed by the individual and countersigned by an appropriate official of the most recent employer for work involving radiation exposure, or the individual's current employer, if the individual is not employed by the licensee or registrant; and

(C) obtain reports of the individual's dose equivalent(s) from the most recent employer for work involving radiation exposure, or the individual's current employer (if the individual is not employed by the licensee or registrant), by telephone, telegram, facsimile, or letter. The licensee or registrant shall request a written verification of the dose data if the authenticity of the transmitted report cannot be established.

(iv) (A) The licensee or registrant shall record the exposure history, as required by §175.03(d)(5)(i), on form RAD-4, "Cumulative Occupational Radiation Exposure History," or other clear and legible record, of all the information required on that form. The form or record shall show each period in which the individual received occupational exposure to radiation or radioactive material and shall be signed by the individual who received the exposure. For each period for which the licensee or registrant obtains reports, the licensee or registrant shall use the dose shown in the report in preparing form RAD-4 or equivalent. For any period in which the licensee or registrant does not obtain a report, the licensee or registrant shall place a notation on form RAD-4 or equivalent indicating the periods of time for which data are not available.

(B) Licensees or registrants are not required to reevaluate the separate external dose equivalents and internal committed dose equivalents or intakes of radionuclides assessed pursuant to this Code in effect before January 1, 1994. Further, occupational exposure histories obtained

and recorded on form RAD-4 or equivalent before the effective date of this Code, would not have included effective dose equivalent, but may be used in the absence of specific information on the intake of radionuclides by the individual.

(v) If the licensee or registrant is unable to obtain a complete record of an individual's current and previously accumulated occupational dose, the licensee or registrant:

(A) in establishing administrative controls pursuant to §175.03(c)(1) for the current year, shall assume that the allowable dose limit for the individual is reduced by 12.5 mSv (1.25 rem) for each quarter for which records were unavailable and the individual was engaged in activities that could have resulted in occupational radiation exposure; and

(B) shall not authorize the individual to receive any planned special exposures.

(vi) The licensee or registrant shall retain the records on form RAD-4, "Cumulative Occupational Radiation Exposure History," or equivalent until the Department authorizes their disposition. The licensee or registrant shall retain records used in preparing form RAD-4 or equivalent for 3 years after the record is made. This includes records required under the standards for protection against radiation in effect prior to January 1, 1994.

(6) *Planned special exposures.* A licensee or registrant may authorize an adult worker to receive doses in addition to, and accounted for separately from, the doses received under the limits specified in §175.03(c)(1) provided that each of the following conditions is satisfied:

(i) The licensee or registrant authorizes a planned special exposure only in an exceptional situation when alternatives that might avoid the higher exposure are unavailable or impractical.

(ii) Before the exposure occurs, the licensee or registrant, and employer if the employer is not the licensee or registrant, specifically authorizes the planned special exposure in writing.

(iii) Before a planned special exposure, the licensee or registrant ensures that each individual involved is:

(A) informed of the purpose of the planned operation; and

(B) informed of the estimated doses and associated potential risks and specific radiation levels or other conditions that might be involved in performing the task; and

(C) instructed in the measures to be taken to keep the dose ALARA considering other risks that may be present.

(iv) Prior to permitting an individual to participate in a planned special exposure, the licensee or registrant shall ascertain prior doses as required by §175.03(c)(5)(ii) during the lifetime of the individual for each individual involved.

(v) Subject to §175.03(c)(1)(ii), the licensee or registrant shall not authorize a planned special exposure that would cause an individual to receive a dose from all planned special exposures and all doses in excess of the limits to exceed:

(A) the numerical values of any of the dose limits in §175.03(c)(1)(i) in any year; and

(B) five times the annual dose limits in §175.03(c)(1)(i) during the individual's lifetime.

(vi) The licensee or registrant maintains records of the conduct of a planned special exposure in accordance with §175.03(k)(7) and submits a written report in accordance with §175.03(l)(4).

(vii) The licensee or registrant records the best estimate of the dose resulting from the planned special exposure in the individual's record and informs the individual, in writing, of the dose within 30 days from the date of the planned special exposure. The dose from planned special exposures shall not be considered in controlling future occupational dose of the individual pursuant to §175.03(c)(1)(i) but shall be included in evaluations required by §175.03(c)(6)(iv) and (v).

(7) *Occupational dose limits for minors.* The annual occupational dose limits for minors are 10 percent of the annual occupational dose limits specified for adult workers in §175.03(c)(1).

(8) *Dose to an embryo/fetus.* (i) The licensee or registrant shall ensure that the dose equivalent to the embryo/fetus during the entire pregnancy, due to occupational exposure of a declared pregnant woman, does not exceed 5 mSv (0.5 rem). (See §175.03(k)(9) for recordkeeping requirements.)

(ii) The licensee or registrant shall review exposure history and adjust working conditions so as to avoid a monthly exposure of more than 0.5 mSv (50 mrem) to a declared pregnant woman.

(iii) The dose to an embryo/fetus shall be taken as the sum of:

(A) the deep dose equivalent to the declared pregnant woman; and

(B) the dose equivalent to the embryo/fetus resulting from radionuclides in the embryo/fetus and radionuclides in the declared pregnant woman.

(iv) If, by the time the woman declares pregnancy to the licensee or registrant, the dose equivalent to the embryo/fetus is found to have exceeded 5 mSv (0.5 rem), or is within 0.5 mSv (0.05 rem) of this dose, the licensee or registrant shall be deemed to be in compliance with §175.03(c)(8)(i) if the additional dose to the embryo/fetus does not exceed 0.5 mSv (0.05 rem) during the remainder of the pregnancy.

(d) *Radiation dose limits for individual members of the public.*

(1) *Dose limits for individual members of the public.* (i) Each licensee or registrant shall conduct operations so that:

(A) the dose in any unrestricted area from external sources does not exceed 0.02 mSv (0.002 rem) in any one hour; and

(B) the total effective dose equivalent to individual members of the public from the licensed or registered operation, exclusive of the dose contribution from the licensee's or registrant's disposal of radioactive material into sanitary sewerage in accordance with §175.104 of this Code, does not exceed 1 mSv (0.1 rem) in a year.

(ii) Notwithstanding the provisions of §175.03(d)(1)(i)(B), where structural modification to the physical plant or equipment is required to meet the 1 mSv (0.1 rem) per year limit at facilities with radiation equipment installed before the effective date of these requirements and neither the use nor the physical components or structure of the facility are changed after the effective date of these requirements, the total effective dose equivalent to a member of the general public shall not exceed 5 mSv (0.5 rem) in a year. However, any such change occurring after the effective date of these requirements shall require the licensee or registrant to comply with the provisions of §175.03(d)(1)(i)(B).

(iii) The Department may impose additional restrictions on radiation levels in any unrestricted area and on the total quantity of radionuclides that a licensee may release in effluents in order to assure that the limits set forth in this Code are not exceeded.

(2) *Compliance with dose limits for individual members of the public.*

(i) The licensee or registrant shall make or cause to be made surveys of radiation levels in unrestricted areas and radioactive materials in effluents released to unrestricted areas to demonstrate compliance with the dose limits for individual members of the public in §175.03(d)(1).

(ii) A licensee or registrant shall show compliance with the annual dose limit in §175.03(d)(1) by:

(A) demonstrating by measurement or calculation that the total effective dose equivalent to the individual likely to receive the highest dose from the licensed or registered operation does not exceed the annual dose limit; or

(B) demonstrating that:

(a) the annual average concentrations of radioactive material released in gaseous and liquid effluents at the boundary of the unrestricted area do not exceed the values specified in Table 2 of Appendix B of this section; and

(b) if an individual were continually present in an unrestricted area, the dose from external sources would not exceed 0.02 mSv (0.002 rem) in an hour and 0.5 mSv (0.05 rem) in a year.

(iii) Upon approval from the Department, the licensee or registrant may adjust the effluent concentration values in Table 2, Appendix B of this section, for members of the public, to take into account the actual physical and chemical characteristics of the effluents, such as, aerosol size distribution, solubility, density, radioactive decay equilibrium, and chemical form.

(e) *Testing for leakage or contamination of sealed sources.*

(1) *Testing for leakage or contamination of sealed sources.* (i) The licensee or registrant in possession of any sealed source shall assure that:

(A) each sealed source, except as specified in §175.03(e)(1)(ii), is tested for leakage or contamination and the test results are received before the sealed source is put into use unless the licensee or registrant has a certificate from the transferor indicating that the sealed source was tested within 6 months before transfer to the licensee or registrant; and

(B) each sealed source that is not designed to emit alpha particles is tested for leakage or contamination at intervals not to exceed 6 months; and

(C) each sealed source that is designed to emit alpha particles is tested for leakage or contamination at intervals not to exceed 3 months; and

(D) for each sealed source that is required to be tested for leakage or contamination, at any other time there is reason to suspect that the sealed source might have been damaged or might be leaking, the licensee or registrant shall assure that the sealed source is tested for leakage or contamination before further use; and

(E) tests for leakage for all sealed sources, except brachytherapy sources manufactured to contain radium, shall be capable of detecting the presence of 185 Bq (0.005 mCi) of radioactive material on a test sample. Test samples shall be taken from the sealed source or from the surfaces of the container in which the sealed source is stored or mounted on which one might expect contamination to accumulate. For a sealed source contained in a device, test samples are obtained when the source is in the "off" position; and

(F) the test for leakage for brachytherapy sources manufactured to contain radium shall be capable of detecting an absolute leakage rate of 37 Bq (0.001 mCi) of radon-222 in a 24 hour period when the collection efficiency for radon-222 and its daughters has been determined with respect to collection method, volume and time; and

(G) tests for contamination from radium daughters shall be taken on the interior surface of brachytherapy source storage containers and shall be capable of detecting the presence of 185 Bq (0.005 mCi) of a radium daughter which has a half-life greater than four (4) days; and

(H) the test for leakage for sealed sources containing iodine-125 shall be capable of detecting an absolute leakage rate of 185 Bq (0.005 mCi) in a 24 hour period.

(ii) A licensee or registrant need not perform tests for leakage or contamination on the following:

(A) sealed sources containing only radioactive material with a half-life of less than 30 days; (B) sealed sources containing only radioactive material as a gas;

(C) sealed sources containing 3.7 MBq (100 mCi) or less of beta or photon-emitting material or 370 kBq (10 mCi) or less of alpha-emitting material;

(D) sealed sources containing only hydrogen-3;

(E) seeds of iridium-192 encased in nylon ribbon; and

(F) sealed sources, except teletherapy and brachytherapy sources, which are stored, not being used and identified as in storage. The licensee or registrant shall, however, test each such sealed source for leakage or contamination and receive the test results before any use or transfer unless it has been tested for leakage or contamination within 6 months before the date of use or transfer.

(iii) Tests for leakage or contamination from sealed sources shall be performed by persons specifically authorized by the Department to perform such services.

(iv) Test results shall be kept in units of becquerels (or microcuries) and maintained for inspection by the Department.

(v) The following shall be considered evidence that a sealed source is leaking:

(A) The presence of 185 Bq (0.005 mCi) or more of removable contamination on any test sample.

(B) Leakage of 37 Bq (0.001 mCi) of radon-222 per 24 hours for brachytherapy sources manufactured to contain radium.

(C) The presence of removable contamination resulting from the decay of 185 Bq (0.005 mCi) or more of radium.

(D) Leakage of 185 Bq (0.005 mCi) of iodine-125 per 24 hours for sealed sources containing iodine-125.

(vi) The licensee or registrant shall immediately withdraw a leaking sealed source from use and shall take action to prevent the spread of contamination. The leaking sealed source shall be repaired or disposed of in accordance with this Code.

(vii) Reports of test results for leaking or contaminated sealed sources shall be made pursuant to §175.03(l)(7).

(f) *Surveys and monitoring.* (1) *General.* (i) Each licensee or registrant shall make, or cause to be made, surveys that:

(A) may be necessary for the licensee or registrant to comply with this Code; and

(B) are necessary under the circumstances to evaluate:

(a) the magnitude and extent of radiation levels; and

(b) concentrations or quantities of radioactive material; and

(c) the potential radiological hazards of the radiation levels and residual radioactivity detected.

(ii) The licensee or registrant shall ensure that instruments and equipment used for quantitative radiation measurements, for example, dose rate and effluent monitoring, are calibrated at intervals not to exceed 12 months for the radiation measured.

(2) *Personnel monitoring.* (i) *External radiation sources.* Each licensee shall monitor occupational exposure to radiation from licensed and unlicensed radiation sources under the control of the licensee and shall supply and require the use of individual monitoring devices by:

(A) adults likely to receive, in 1 year from sources external to the body, a dose in excess of 10 percent of the limits in §175.03(c)(1)(i) and

(B) minors and declared pregnant women likely to receive, in 1 year from sources external to the body, a deep dose equivalent in excess of 10 percent of any of the applicable limits in §175.03(c)(7) or §175.03(c)(8); and

(C) individuals entering a high or very high radiation area.

(ii) A person supplying personnel monitoring devices to individuals pursuant to §175.03(f)(2)(i) shall ensure that the individuals wear such devices as follows:

(A) An individual monitoring device used for monitoring the dose to the whole body shall be worn at the unshielded location of the whole body likely to receive the highest exposure.

(B) An individual monitoring device used for monitoring the dose to an embryo/fetus of a declared pregnant woman pursuant to §175.03(c)(8) shall be located at the waist under any protective garment worn by the woman.

(C) An individual monitoring device used for monitoring the lens dose equivalent shall be located at the neck outside any protective garment worn by the individual, or at an unshielded location closer to the eye.

(D) An individual monitoring device used for monitoring the dose to the extremities shall be worn on the extremity likely to receive the highest exposure. The device shall be oriented to measure the highest dose to the extremity being monitored.

(iii) All personnel dosimeters, except for direct and indirect reading pocket ionization chambers and those dosimeters used to measure the dose to any extremity, that require processing to determine the radiation dose and that are used by licensees and registrants to comply with §175.03(c)(1), with other applicable provisions of this Code, or with conditions specified in a license, certified registration or registration shall be processed and evaluated by a dosimetry processor:

(A) holding current personnel dosimetry accreditation from the National Voluntary Laboratory Accreditation Program (NVLAP) of the National Institute of Standards and Technology; and

(B) approved in this accreditation process for the type of radiation or radiations included in the NVLAP program that most closely approximates the type of radiation or radiations for which the individual wearing the dosimeter is monitored.

(iv) The licensee or registrant shall ensure that adequate precautions are taken to prevent a deceptive exposure of an individual monitoring device.

(A) No licensee or registrant shall remove an exposure from an individual's exposure record without prior authorization from the Department.

(v) Each licensee or registrant shall monitor, to determine compliance with §175.03(c)(4), the occupational intake of radioactive material by and assess the committed effective dose equivalent to:

(A) adults likely to receive, in 1 year, an intake in excess of 10 percent of the applicable ALI in Table 1, Columns 1 and 2, of Appendix B of this section; and

(B) minors and declared pregnant women likely to receive, in 1 year, a committed effective dose equivalent in excess of 0.5 mSv (0.05 rem).

(vi) The licensee or registrant shall submit the dosimeter for processing with due diligence and in no event in excess of the time period specified by the manufacturer of the dosimeter.

(g) *Control of exposure from external sources in restricted areas.* (1) *Control of access to high radiation areas.* (i) The licensee or registrant shall ensure that each entrance or access point to a high radiation area has one or more of the following features:

(A) a control device that, upon entry into the area, causes the level of radiation to be reduced below that level at which an individual might receive a deep dose equivalent of 1 mSv (0.1 rem) in 1 hour at 30 cm (12 in.) from the source of radiation or from any surface that the radiation penetrates; or

(B) a control device that energizes a conspicuous visible or audible alarm signal so that the individual entering the high radiation area and the supervisor of the activity are made aware of the entry; or

(C) entryways that are locked, except during periods when access to the areas is required, with positive control over each individual entry.

(ii) In place of the controls required by §175.03(g)(1)(i) for a high radiation area, the licensee or registrant may substitute continuous direct or electronic surveillance that is capable of preventing unauthorized entry.

(iii) The licensee or registrant may apply to the Department for approval of alternative methods for controlling access to high radiation areas.

(iv) The licensee or registrant shall establish the controls required by §175.03(g)(1)(i), (ii) or (iii) in a way that does not prevent individuals from leaving a high radiation area.

(v) The licensee or registrant is not required to control each entrance or access point to a room or other area that is a high radiation area solely because of the presence of radioactive materials prepared for transport and packaged and labeled in accordance with the regulations of the U.S. Department of Transportation provided that:

(A) the packages do not remain in the area longer than 3 days; and

(B) the dose rate at 1 m (3 ft) from the external surface of any package does not exceed 0.1 mSv (0.01 rem) per hour.

(vi) The licensee or registrant is not required to control entrance or access to rooms or other areas in hospitals solely because of the presence of patients containing radioactive material, provided that there are personnel in attendance who are taking the necessary precautions to prevent the exposure of individuals to radiation or radioactive material in excess of the established limits in this section and to operate within the ALARA provisions of the licensee's or registrant's radiation protection program.

(vii) The registrant is not required to control entrance or access to rooms or other areas containing sources of radiation capable of producing a high radiation area as described in §175.03(g)(1) if the registrant has met all the specific requirements for access and control specified in other applicable sections of this Code.

(2) *Control of access to very high radiation areas.* (i) In addition to the requirements in §175.03(g)(1), the licensee or registrant shall institute measures to ensure that an individual is not able to gain unauthorized or inadvertent access to areas in which radiation levels could be encountered at 5 Gy (500 rad) or more in 1 hour at 1 m (3 ft) from a source of radiation or any surface through which the radiation penetrates. This requirement does not apply to rooms or areas in which diagnostic x-ray systems are the only source of radiation, or to non-self-shielded irradiators.

(ii) The registrant is not required to control entrance or access to rooms or other areas containing sources of radiation capable of producing a very high radiation area as described in §175.03(g)(2)(i) if the registrant has met all the specific requirements for access and control specified in other applicable sections of this Code.

(3) *Control of access to very high radiation areas—irradiators.* (i) This subdivision applies to licensees or registrants with sources of radiation in non-self-shielded irradiators. Section 175.03(g)(3) does not apply to sources of radiation that are used in teletherapy, in industrial radiography, or in completely self-shielded irradiators in which the source of radiation is both stored and operated within the same shielding radiation barrier and, in the designed configuration

of the irradiator, is always physically inaccessible to any individual and cannot create high levels of radiation in an area that is accessible to any individual.

(ii) Each area in which there may exist radiation levels in excess of 5 Gy (500 rad) in 1 hour at 1 m (3 ft) from a source of radiation that is used to irradiate materials shall meet the following requirements:

(A) Each entrance or access point shall be equipped with entry control devices which:

(a) function automatically to prevent any individual from inadvertently entering a very high radiation area; and

(b) permit deliberate entry into the area only after a control device is actuated that causes the radiation level within the area, from the source of radiation, to be reduced below that at which it would be possible for an individual to receive a deep dose equivalent in excess of 1 mSv (0.1 rem) in 1 hour; and

(c) prevent operation of the source of radiation if it would produce radiation levels in the area that could result in a deep dose equivalent to an individual in excess of 1 mSv (0.1 rem) in 1 hour.

(B) Additional control devices shall be provided so that, upon failure of the entry control devices to function as required by §175.03(g)(3)(ii)(A):

(a) the radiation level within the area, from the source of radiation, is reduced below that at which it would be possible for an individual to receive a deep dose equivalent in excess of 1 mSv (0.1 rem) in 1 hour; and

(b) conspicuous visible and audible alarm signals are generated to make an individual attempting to enter the area aware of the hazard and at least one other authorized individual, who is physically present, familiar with the activity, and prepared to render or summon assistance, aware of the failure of the entry control devices.

(C) The licensee or registrant shall provide control devices so that, upon failure or removal of physical radiation barriers other than the sealed source's shielded storage container:

(a) the radiation level from the source of radiation is reduced below that at which it would be possible for an individual to receive a deep dose equivalent in excess of 1 mSv (0.1 rem) in 1 hour; and

(b) conspicuous visible and audible alarm signals are generated to make potentially affected individuals aware of the hazard and the licensee or registrant or at least one other individual, who is familiar with the activity and prepared to render or summon assistance, aware of the failure or removal of the physical barrier.

(D) When the shield for stored sealed sources is a liquid, the licensee or registrant shall provide means to monitor the integrity of the shield and to signal, automatically, loss of adequate shielding.

(E) Physical radiation barriers that comprise permanent structural components, such as walls, that have no credible probability of failure or removal in ordinary circumstances need not meet the requirements of §175.03(g)(3)(ii)(C) and (D).

(F) Each area shall be equipped with devices that will automatically generate conspicuous visible and audible alarm signals to alert personnel in the area before the source of radiation can be put into operation and in time for any individual in the area to operate a clearly identified control device, which must be installed in the area and which can prevent the source of radiation from being put into operation.

(G) Each area shall be controlled by use of such administrative procedures and such devices as are necessary to ensure that the area is cleared of personnel prior to each use of the source of radiation.

(H) Each area shall be checked by a radiation measurement to ensure that, prior to the first individual's entry into the area after any use of the source of radiation, the radiation level from the source of radiation in the area is below that at which it would be possible for an individual to receive a deep dose equivalent in excess of 1 mSv (0.1 rem) in 1 hour.

(I) The entry control devices required in §175.03(g)(3)(ii)(A) shall be tested for proper functioning. (See §175.03(k)(10) for recordkeeping requirements.)

(a) Testing shall be conducted prior to initial operation with the source of radiation on any day, unless operations were continued uninterrupted from the previous day; and

(b) testing shall be conducted prior to resumption of operation of the source of radiation after any unintentional interruption; and

(c) the licensee or registrant shall submit and adhere to a schedule for periodic tests of the entry control and warning systems.

(J) The licensee or registrant shall not conduct operations, other than those necessary to place the source of radiation in safe condition or to effect repairs on controls, unless control devices are functioning properly.

(K) Entry and exit portals that are used in transporting materials to and from the irradiation area, and that are not intended for use by individuals, shall be controlled by such devices and administrative procedures as are necessary to physically protect and warn against inadvertent entry by any individual through these portals. Exit portals for irradiated materials shall be equipped to detect and signal the presence of any loose radioactive material that is carried toward such an exit and automatically to prevent loose radioactive material from being carried out of the area.

(iii) Licensees, registrants, or applicants for licenses or registrations for sources of radiation within the purview of §175.03(g)(3)(ii) which will be used in a variety of positions or in locations, such as open fields or forests, that make it impracticable to comply with certain requirements of §175.03(g)(3)(ii), such as those for the automatic control of radiation levels, may apply to the Department for approval of alternative safety measures. Alternative safety measures shall provide personnel protection at least equivalent to those specified in §175.03(g)(3)(ii). At least one of the alternative measures shall include an entry-preventing interlock control based on a measurement of the radiation that ensures the absence of high radiation levels before an individual can gain access to the area where such sources of radiation are used.

(iv) The entry control devices required by §175.03(g)(3)(ii) and (iii) shall be established in such a way that no individual will be prevented from leaving the area.

(h) *Respiratory protection and controls to restrict internal exposure in restricted areas.* (1) *Use of process or other engineering controls.* The licensee or registrant shall use to the extent practicable, process or other engineering controls, such as containment, decontamination, or ventilation, to control the concentrations of radioactive material in air.

(2) Use of other controls. When it is not practicable to apply process or other engineering controls to control the concentrations of radioactive material in air to values below those that define an airborne radioactivity area, the licensee or registrant shall, consistent with maintaining the total effective dose equivalent ALARA, increase monitoring and limit intakes by one or more of the following means:

(i) control of access; or

(ii) limitation of exposure times; or

(iii) use of respiratory protection equipment; or

(iv) other controls.

If the licensee performs an ALARA analysis to determine whether or not respirators should be used, the licensee may consider safety factors other than radiological factors. The licensee should also consider the impact of respirator use on workers' industrial health and safety.

(3) Use of individual respiratory protection equipment. (i) If the licensee or registrant uses respiratory protection equipment to limit intakes pursuant to §175.03(h)(2):

(A) except as provided in §175.03(h)(3)(i)(B), the licensee or registrant shall use only respiratory protection equipment that is tested and certified or had certification extended by the National Institute for Occupational Safety and Health and the Mine Safety and Health Administration.

(B) If the licensee or registrant wishes to use equipment that has not been tested or certified by the National Institute for Occupational Safety and Health and the Mine Safety and Health Administration or has not had certification extended by the National Institute for Occupational Safety and Health and the Mine Safety and Health Administration, or for which there is no schedule for testing or certification, the licensee or registrant shall submit an application to the Department for authorized use of that equipment. The application must include a demonstration by licensee testing or a demonstration on the basis of reliable test information, that the material and performance characteristics of the equipment are capable of providing the proposed degree of protection under anticipated conditions of use.

(C) The licensee or registrant shall implement and maintain a respiratory protection program that includes:

(a) air sampling sufficient to identify the potential hazard, permit proper equipment selection, and estimate doses; and

(b) surveys and bioassays, as necessary, to evaluate actual intakes; and

(c) testing of respirators for operability (user seal check for face sealing devices and functional check for others) immediately prior to each use; and

(d) written procedures regarding respirator selection; fit testing; inventory and control, storage, issuance; maintenance, repair and testing of respirators, including testing for operability immediately prior to each use; supervision and training of respirator users; monitoring, including air sampling and bioassays, and breathing air quality; and quality assurance and recordkeeping; and

(e) determination by a physician that the individual user is medically fit to use the respiratory protection equipment prior to initial fitting of a face sealing respirator; before the first field use of non-face sealing respirators and either every 12 months thereafter, or periodically at a frequency determined by a physician.

(f) Fit testing, with a fit factor 10 times the APF for negative pressure devices, and a fit factor greater than or equal to 500 for any positive pressure, continuous flow, and pressure demand devices, before the first field use of tight fitting, face sealing respirators and periodically thereafter at a frequency of at least once per year. Fit testing must be performed with the face-piece operating in the negative pressure mode.

(D) The licensee or registrant shall issue a written policy statement on respirator usage covering:

(a) the use of process or other engineering controls, instead of respirators; and

(b) the routine, nonroutine, and emergency use of respirators; and

(c) limitations on periods of respirator use and relief from respirator use.

(E) The licensee or registrant shall advise each respirator user that the user may leave the area at any time for relief from respirator use in the event of equipment malfunction, physical or

psychological distress, procedural or communication failure, significant deterioration of operating conditions, or any other conditions that might require such relief.

(F) The licensee or registrant shall use respiratory protection equipment within the equipment manufacturer's expressed limitations for type and mode of use. When selecting respiratory devices, the licensee shall provide for low temperature work environments, and the concurrent use of other safety or radiological protection equipment or skin protection, when needed. The licensee shall use equipment in such a way as not to interfere with the proper operation of the respirator.

(ii) When estimating exposure of individuals to airborne radioactive materials, the licensee or registrant may make allowance for respiratory protection equipment used to limit intakes pursuant to §175.03(h)(2), provided that the following conditions, in addition to those in §175.03(h)(3)(i), are satisfied:

(A) the licensee or registrant selects respiratory protection equipment that provides a protection factor, specified in Appendix A of this section, greater than the multiple by which peak concentrations of airborne radioactive materials in the working area are expected to exceed the values specified in Table 1, Column 3 of Appendix B of this section. However, if the selection of respiratory protection equipment with a protection factor greater than this multiple of peak concentration is inconsistent with the goal specified in §175.03(h)(2) of keeping the total effective dose equivalent ALARA, the licensee or registrant may select respiratory protection equipment with a lower protection factor provided that such a selection would result in a total effective dose equivalent that is ALARA. In estimating the dose to individuals from intake of airborne radioactive materials, the concentration of radioactive material in the air that is inhaled when respirators are worn is initially assumed to be the ambient concentration in air without respiratory protection, divided by the assigned protection factor. If the dose is later found to be greater than the initially estimated dose, the corrected value must be used. If the dose is later found to be less than the initially estimated dose, the corrected value may be used.

(B) The licensee or registrant shall obtain authorization from the Department before using assigned protection factors in excess of those specified in Appendix A of this section. The Department may authorize a licensee or registrant to use higher protection factors on receipt of an application that:

(a) describes the situation for which a need exists for higher protection factors, and

(b) demonstrates that the respiratory protection equipment provides these higher protection factors under the proposed conditions of use.

(iii) In an emergency, the licensee or registrant shall use as emergency equipment only respiratory protection equipment that has been specifically certified or had certification extended for emergency use by the National Institute for Occupational Safety and Health and the Mine Safety and Health Administration.

(iv) The licensee or registrant shall notify the Department in writing at least 30 days before the date that respiratory protection equipment is first used pursuant to either §175.03(h)(3)(i) or (ii).

(4) *Further restrictions on the use of respiratory protection equipment.* The Department may impose restrictions, in addition to those in §175.03(h)(2), §175.03(h)(3) and in Appendix A to §175.03 to:

(i) ensure that the respiratory protection program of the licensee is adequate to limit doses to individuals from intakes of airborne radioactive materials consistent with maintaining total effective dose equivalent ALARA; and

(ii) limit the extent to which a licensee may use respiratory protection equipment instead of process or other engineering controls.

(i) *Storage and control of licensed or registered sources of radiation.* (1) *Security of stored sources of radiation.* The licensee or registrant shall secure from unauthorized removal or access licensed or registered sources of radiation that are stored in unrestricted areas.

(2) Radioactive materials shall not be stored with either food or beverages.

(3) Control of sources of radiation not in storage.

(i) The licensee or registrant shall control and maintain constant surveillance of licensed radioactive material that is in an unrestricted area and that is not in storage or in a patient.

(ii) The registrant shall maintain control of radiation machines that are in an unrestricted area and that are not in storage.

(j) *Precautionary procedures.* (1) *Caution Signs.* (i) Standard radiation symbol. Unless otherwise authorized by the Department, the symbol prescribed herein shall use the colors magenta, or purple, or black on yellow background. The symbol prescribed is the three-bladed design as follows:

RADIATION SYMBOL

(A) Cross-hatched area is to be magenta, or purple, or black, and

(B) the background is to be yellow.

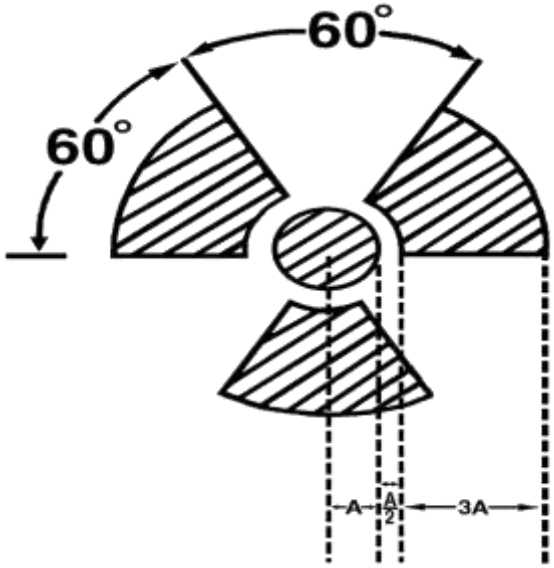

(ii) *Exception to color requirements for standard radiation symbol.* Notwithstanding the requirements of §175.03(j)(1)(i), licensees or registrants are authorized to label sources, source holders, or device components containing sources of radiation that are subjected to high temperatures, with conspicuously etched or stamped radiation caution symbols and without a color requirement.

(iii) *Additional information on signs and labels.* In addition to the contents of signs and labels prescribed in this section, the licensee or registrant shall provide, on or near the required signs and labels, additional information, as appropriate, to make individuals aware of potential radiation exposures and to minimize the exposures.

(2) Posting requirements. (i) *Posting of radiation areas.* The licensee or registrant shall post each radiation area with a conspicuous sign or signs bearing the radiation symbol and the words "CAUTION, RADIATION AREA."

(ii) *Posting of high radiation areas.* The licensee or registrant shall post each high radiation area with a conspicuous sign or signs bearing the radiation symbol and the words "CAUTION, HIGH RADIATION AREA" or "DANGER, HIGH RADIATION AREA."

(iii) *Posting of very high radiation areas.* The licensee or registrant shall post each very high radiation area with a conspicuous sign or signs bearing the radiation symbol and words "GRAVE DANGER, VERY HIGH RADIATION AREA."

(iv) *Posting of airborne radioactivity areas.* The licensee or registrant shall post each airborne radioactivity area with a conspicuous sign or signs bearing the radiation symbol and the words "CAUTION, AIRBORNE RADIOACTIVITY AREA" or "DANGER, AIRBORNE RADIOACTIVITY AREA."

(v) *Posting of areas or rooms in which licensed radioactive material is used or stored.* The licensee shall post each area or room in which there is used or stored an amount of licensed material exceeding 10 times the quantity of such material specified in Appendix C of this section with a conspicuous sign or signs bearing the radiation symbol and the words "CAUTION, RADIOACTIVE MATERIAL(S)" or "DANGER, RADIOACTIVE MATERIAL(S)."

(vi) Such cautionary postings shall not be used except as required by this Code.

(3) *Exceptions to posting requirements.* (i) A licensee or registrant is not required to post caution signs in areas or rooms containing sources of radiation for periods of less than 8 hours, if each of the following conditions is met:

(A) the sources of radiation are constantly attended during these periods by an individual who takes the precautions necessary to prevent the exposure of individuals to sources of radiation in excess of the limits established in this section; and

(B) the area or room is subject to the licensee's or registrant's control.

(ii) Rooms or other areas in hospitals that are occupied by patients are not required to be posted with caution signs pursuant to §175.03(j)(2) provided that the patient could be released from confinement pursuant to §175.103(c)(9) of this Code.

(iii) A room or area is not required to be posted with a caution sign because of the presence of a sealed source provided the radiation level at 30 cm (12 in.) from the surface of the sealed source container or housing does not exceed 0.05 mSv (0.005 rem) per hour.

(iv) A room or area is not required to be posted with a caution sign because of the presence of radiation machines used solely for diagnosis in the healing arts.

(4) *Labeling containers and radiation machines.* (i) The licensee or registrant shall ensure that each container of licensed radioactive material bears a durable, clearly visible label bearing the radiation symbol and the words "CAUTION, RADIOACTIVE MATERIAL" or "DANGER, RADIOACTIVE MATERIAL." The label shall also provide information, such as the radionuclides present, an estimate of the quantity of radioactivity, the date for which the activity is estimated, radiation levels, kinds of materials, and mass enrichment, to permit individuals handling or using the containers, or working in the vicinity of the containers, to take precautions to avoid or minimize exposures.

(ii) Each licensee shall, prior to removal or disposal of empty uncontaminated containers to unrestricted areas, remove or deface the radioactive material label or otherwise clearly indicate that the container no longer contains radioactive materials.

(iii) Each registrant shall ensure that each radiation machine is labeled in a conspicuous manner which cautions individuals that radiation is produced when it is ener- gized.

(iv) Such cautionary labels shall not be used except as required by this Code.

(5) *Exemptions to labeling requirements.* A licensee or registrant is not required to label: (i) containers holding licensed radioactive material in quantities less than the quantities listed in Appendix C of this section; or

(ii) containers holding licensed radioactive material in concentrations less than those specified in Table 3 of Appendix B of this section; or

(iii) containers attended by an individual who takes the precautions necessary to prevent the exposure of individuals in excess of the limits established by this section; or

(iv) containers when they are in transport and packaged and labeled in accordance with the regulations of the U.S. Department of Transportation; or

(v) containers that are accessible only to individuals authorized to handle or use them, or to work in the vicinity of the containers, if the contents are identified to these individuals by a readily available written record. Examples of containers of this type are containers in locations such as water-filled canals, storage vaults, or hot cells. The record shall be retained as long as the containers are in use for the purpose indicated on the record; or

(vi) installed manufacturing or process equipment, such as piping and tanks.

(6) *Procedures for receiving and opening packages.* (i) Each licensee who expects to receive a package containing quantities of radioactive material in excess of a Type A quantity, as defined in §175.02(a)(232) and Appendix A of §175.105 of this Code, shall make arrangements to receive:

(A) the package when the carrier offers it for delivery; or

(B) notification of the arrival of the package at the carrier's terminal and to take possession of the package expeditiously.

(ii) Each licensee shall:

(A) monitor the external surfaces of a package labeled with a U.S. Department of Transportation specified radioactive White I, Yellow II or Yellow III label for radioactive contamination unless the package contains only radioactive material in the form of gas or in special form as defined in §175.02(a)(211) of this Code; and

(B) monitor the external surfaces of a package labeled with a U.S. Department of Transportation specified radioactive White I, Yellow II or Yellow III label for radiation levels unless the package contains quantities of radioactive material that are less than or equal to the Type A quantity, as defined in §175.02(a)(232) and Appendix A of §175.105 of this Code; and

(C) monitor all packages known to contain radioactive material for radioactive contamination and radiation levels if there is evidence of degradation of package integrity, such as packages that are crushed, wet, or damaged.

(iii) The licensee or registrant shall perform the monitoring required by §175.03 (j)(6)(ii) as soon as practicable after receipt of the package, but not later than 3 hours after the package is received at the licensee's or registrant's facility if it is received during the licensee's or registrant's normal working hours, or not later than 3 hours from the beginning of the next working day if it is received after working hours.

(iv) The licensee or registrant shall immediately notify the final delivery carrier and, by telephone and telegram, mailgram, or facsimile, the Department when:

(A) removable radioactive surface contamination exceeds the limits specified in §175.105 of the Code; or

(B) external radiation levels exceed the limits specified in §175.105 of this Code.

(v) Each licensee or registrant shall:

(A) establish, maintain, and retain written procedures for safely opening packages in which radioactive material is received; and

(B) ensure that the procedures are followed and that due consideration is given to special instructions for the type of package being opened.

(vi) Licensees or registrants transferring special form sources in vehicles owned or operated by the licensee or registrant to and from a work site are exempt from the contamination monitoring requirements of §175.03(j)(6)(ii), but are not exempt from the monitoring requirement in §175.03(j)(6)(ii)(B) for measuring radiation levels that ensures that the source is still properly lodged in its shield.

(k) *Records.* (1) *General provisions.* (i) (A) Except as required by federal law or regulations, each licensee or registrant shall use the following units: curie, rad, rem, including multiples and subdivisions, and shall clearly indicate the units of all quantities on records required by this subdivision.

(B) In the records required by this subdivision, the licensee may record quantities in the International System of Units (SI) in parentheses following each of the units specified in clause (A) of this subparagraph. However, all quantities must be recorded as stated in clause (A) of this subparagraph.

(ii) The licensee or registrant shall make a clear distinction between the quantities entered on the records required by this section, such as, total effective dose equivalent, total organ dose equivalent, shallow dose equivalent, lens dose equivalent, deep dose equivalent, or committed effective dose equivalent.

(2) *Records of radiation protection programs.* (i) Each licensee or registrant shall maintain records of the radiation protection program, including:

(A) the provisions of the program; and

(B) audits and other reviews of program content and implementation.

(ii) The licensee or registrant shall retain the records required by §175.03(k)(2)(i)(A) until the Department terminates each pertinent license, certified registration or registration requiring the record. The licensee or registrant shall retain the records required by §175.03(k)(2)(i)(B) for 3 years after the record is made.

(3) *Records of authority and responsibilities for radiation protection programs*.

(i) A licensee shall retain a record of actions taken by the licensee's management in accordance with §175.103(b)(2)(i) of this Code for 5 years. The record shall include a summary of the actions taken and a signature of licensee management.

(ii) The licensee shall retain a copy of both authority, duties, and responsibilities of the Radiation Safety Officer as required by §175.103(b)(2)(ii) of this Code, and a signed copy of each Radiation Safety Officer's agreement to be responsible for implementing the radiation safety program, as required by §175.103(b)(2)(ii) of this Code, for the duration of the license. The records shall include the signature of the Radiation Safety Officer and licensee management.

(4) *Records of radiation protection program changes*.

A licensee shall retain a record of each radiation protection program change made in accordance with §175.03(b)(2)(i) of this Code for 5 years. The record shall include a copy of the old and new procedures; the effective date of the change; and the signature of the licensee management that reviewed and approved the change.

(5) *Records of receipt, use and disposition of radioactive material*. (i) Each licensee shall maintain records of the receipt, use and disposition of radioactive material in units of becquerels or microcuries and shall include from whom such materials were received and the ultimate disposition.

(ii) The licensee shall retain the records required by §175.03(k)(3)(i) of this Code for 3 years after the record is made.
(6) *Records of surveys*. (i) Each licensee or registrant shall maintain records showing the results of surveys and calibrations required by §175.03(f) and §175.03(j)(6)(ii) of this Code. The licensee or registrant shall retain these records for 3 years after the record is made.
(ii) The licensee or registrant shall retain each of the following records until the Department authorizes the disposition of these records:
(A) records of the results of surveys to determine the dose from external sources of radiation used, in the absence of or in combination with individual monitoring data, in the assessment of individual dose equivalents; and
(B) records of the results of measurements and calculations used to determine individual intakes of radioactive material and used in the assessment of internal dose; and
(C) records showing the results of air sampling, surveys, and bioassays required pursuant to §175.03(h)(3)(i)(C)(a) and (b); and
(D) records of the results of measurements and calculations used to evaluate the release of radioactive effluents to the environment.
(7) *Records of prior occupational dose*. (i) The licensee or registrant shall retain the records of prior occupational dose and exposure history as specified in §175.03(c)(5) of this Code on form RAD-4, "Cumulative Occupational Radiation Exposure History" or equivalent, and the records used in preparing form RAD-4 until the Department authorizes their disposition.
(ii) Upon termination of the license or registration, the licensee or registrant shall permanently store records on form RAD-4, "Cumulative Occupational Radiation Exposure History," or equivalent, or shall make provision with the Department for transfer to the Department.
(8) *Records of planned special exposures*. (i) For each use of the provisions of §175.03(c)(6) of this Code for planned special exposures, the licensee or registrant shall maintain records that describe:
(A) the exceptional circumstances requiring the use of a planned special exposure; and
(B) the name of the management official who authorized the planned special exposure and a copy of the signed authorization; and
(C) what actions were necessary; and
(D) why the actions were necessary; and
(E) what precautions were taken to assure that doses were main-
tained ALARA; and
(F) what individual and collective doses were expected to result; and
(G) the doses actually received in the planned special exposure.
(ii) The licensee or registrant shall retain the records until the Department authorizes their disposition.
(iii) Upon termination of the license or registration, the licensee or registrant shall permanently store records on form RAD-4, "Cumulative Occupational Radiation Exposure History," or until disposition is authorized by the Department.
(9) *Records of individual monitoring results*. (i) Recordkeeping Requirement. Each licensee or registrant shall maintain records of doses received by all individuals for whom monitoring was required pursuant to §175.03(f)(2) of this Code, and records of doses received during planned special exposures, accidents, and emergency conditions. Assessments of dose equivalent and records made using units in effect before the effective date of these requirements need not be changed. These records shall include, when applicable:

(A) the deep dose equivalent to the whole body, lens dose equivalent, shallow dose equivalent to the skin, and shallow dose equivalent to the extremities; and
(B) the estimated intake or body burden of radionuclides (see §175.03(c)(2)); and
(C) the committed effective dose equivalent assigned to the intake or body burden of radionuclides; and
(D) the specific information used to assess the committed effective dose equivalent pursuant to §175.03(c)(4)(iii), and when required by §175.03(f)(2); and
(E) the total effective dose equivalent when required by §175(c)(2); and
(F) the total of the deep dose equivalent and the committed dose to the organ receiving the highest total dose.
(ii) Recordkeeping frequency. The licensee or registrant shall make entries of the records specified in §175.03(k)(8)(i) at intervals not to exceed 1 year.
(iii) Recordkeeping format. The licensee or registrant shall maintain the records specified in §175.03(k)(8)(i) on form RAD-5, in accordance with the instructions for form RAD-5, or in clear and legible records containing all the information required by form RAD-5.
(iv) The licensee or registrant shall maintain the records of dose to an embryo/fetus with the records of dose to the declared pregnant woman. The declaration of pregnancy, including the estimated date of conception, shall also be kept on file, but may be maintained separately from the dose records.
(v) The licensee or registrant shall retain each required form or record until the Department authorizes disposition.
(vi) Upon termination of the license or registration, the licensee or registrant shall permanently store records on form RAD-4 or equivalent, or shall make provision with the Department for transfer to the Department.
(10) *Records of dose to individual members of the public*. (i) Each licensee or registrant shall maintain records sufficient to demonstrate compliance with the dose limit for individual members of the public as specified in §175.03(d) of this Code.
(ii) The licensee or registrant shall retain the records required by §175.03(k)(9)(i) until the Department terminates each pertinent license, certified registration or registration requiring the record.
(11) *Records of testing entry control devices for very high radiation areas*.
(i) Each licensee or registrant shall maintain records of tests made pursuant to §175.03(g)(3)(ii)(I) of this Code on entry control devices for very high radiation areas. These records must include the date, time, and results of each such test of function.
(ii) The licensee or registrant shall retain the records required by §175.03(k)(10)(i) for 3 years after the record is made.
(12) *Records of written directives*.
A licensee shall retain a copy of each written directive as required by §175.103(b)(4) of this Code for 3 years.
(13) *Records for procedures for administrations requiring a written directive*.
A licensee shall retain a copy of the procedures required by §175.103(b)(5)(i) of this Code for the duration of the license.
(14) *Records of calibrations of instruments used to measure the activity of unsealed byproduct material*.
A licensee shall maintain a record of instrument calibrations required by §175.103(c)(2) of this Code for 3 years. The records shall include the model and serial number of the instrument, the

date of the calibration, the results of the calibration, and the name of the individual who performed the calibration.

(15) *Records of radiation survey instrument calibrations*.

A licensee shall maintain a record of radiation survey instrument calibrations required by §175.103(c)(3) of this Code for 3 years. The record shall include the model and serial number of the instrument, the date of the calibration, the results of the calibration, and the name of the individual who performed the calibration.

(16) *Records of dosages of unsealed byproduct material for medical use*.

(i) A licensee shall maintain a record of dosage determinations required by §175.103(c)(4) of this Code for 3 years.

(ii) The record shall contain-

(A) The radiopharmaceutical, generic name, trade name, or abbreviation of the radiopharmaceutical, its lot number, and expiration dates and the radionuclide;

(B) The patient's or human research subject's name, or identification number if one has been assigned;

(C) The prescribed dosage, the determined dosage, or a notation that the total activity is less than 1.1 MBq (30mCi);

(D) The date and time of the dosage determination; and

(E) The name of the individual who determined the dosage

(17) *Records of tests for leakage or contamination and inventory of sealed sources and brachytherapy sources*.

(i) A licensee shall retain records of leak tests required by §175.03(e)(1) and §175.103(c)(6)(ii) of this Code for inspection by the Department for 5 years after the records are made. The records shall include the model number, and serial number if one has been assigned, of each source tested; the identity of each source by radionuclide and its estimated activity; the results of the test in units of becquerel or microcurie; the date of the test; and the name of the individual who performed the test.

(ii) A licensee shall retain records of the semi-annual physical inventory of sealed sources and brachytherapy sources required by §175.103(c)(6)(vii) of this Code for 5 years. The inventory records shall contain the model number of each source, and serial number if one has been assigned, the identity of each source by radionuclide and its nominal activity, the location of each source, and the name of the individual who performed the inventory.

(18) *Records of surveys for ambient radiation exposure rate*.

A licensee shall retain a record of each survey required by §175.103(c)(8) of this Code for 3 years. The record shall include the date of the survey, the results of the survey, the instrument used to make the survey, and the name of the individual who performed the survey.

(19) *Records of the release of individuals containing unsealed byproduct material or implants containing byproduct material*.

(i) A licensee shall retain a record of the basis for authorizing the release of an individual in accordance with §175.103(c)(9) of this Code, if the total effective dose equivalent is calculated by-

(A) Using the retained activity rather than the activity administered;

(B) Using an occupancy factor less than 0.25 at 1 meter;

(C) Using the biological or effective half-life; or

(D) Considering the shielding by tissue.

(ii) A licensee shall retain a record that the instructions required by §175.103(c)(9)(ii) of this Code were provided to a breast-feeding female if the radiation dose to the infant or child from continued breast-feeding could result in a total effective dose equivalent exceeding 5 mSv (0.5 rem).

(iii) The records required by subparagraphs (i) and (ii) of this paragraph shall be retained for 3 years after the date of release of the individual.

(20) *Records of mobile medical services*.

(i) A licensee shall retain a copy of each letter that permits the use of byproduct material at a client's address, as required by §175.103(c)(12)(i)(A) of this Code. Each letter shall clearly delineate the authority and responsibility of the licensee and the client and shall be retained for 3 years after the last provision of service.

(ii) A licensee shall retain the record of each survey required by §175.103(c)(12)(i)(D) of this Code for 3 years. The record shall include the date of the survey, the results of the survey, the model and serial number of the instrument used to make the survey, and the name of the individual who performed the survey.

(21) *Records of decay-in-storage*.

A licensee shall maintain records of the disposal of licensed materials, as required by §175. 103(c)(11) of this Code for 3 years. The record shall include the date the radioactive material was placed in storage, the date of the disposal, the model and serial number of the survey instrument used, the background radiation level, the radiation level measured at the surface of each waste container, and the name of the individual who performed the survey.

(22) *Records of molybdenum-99, strontium-82, and strontium-85 concentrations*.

A licensee shall maintain a record of the molybdenum-99 concentration or strontium-82 and strontium-85 concentration tests required by §175.103(d)(3)(ii) and (iii) of this Code for 3 years. The record shall include:

(i) For each measured elution of technetium-99m, the ratio of the measures expressed as kilobecquerel of molybdenum-99 per megabecquerel of technetium-99m (or microcuries of molybdenum per millicurie of technetium), the time and date of the measurement, and the name of the individual who made the measurement; or

(ii) For each measured elution of rubidium-82, the ratio of the measures expressed as kilobecquerel of strontium-82 per megabecquerel of rubidium-82 (or microcuries of strontium-82 per millicurie of rubidium), kilobecquerel of strontium-85 per megabecquerel of rubidium-82 (or microcuries of strontium-85 per millicurie of rubidium), the time and date of the measurement, and the name of the individual who made the measurement.

(23) *Records of safety instruction*.

A licensee shall maintain a record of safety instructions required by §§175.103(e)(2), 175.103(f)(4), and 175.103(h)(5) of this Code for 3 years. The record shall include a list of the topics covered, the date of the instruction, the name(s) of the attendee(s), and the name(s) of the individual(s) who provided the instruction.

(24) *Records of surveys after source implant and removal*.

A licensee shall maintain a record of the surveys required by §§175.103(f)(2) and 175.103(h)(2) of this Code for 3 years. Each record shall include the date and results of the survey, the survey instrument used, and the name of the individual who made the survey.

(25) *Records of brachytherapy source accountability*.

(i) A licensee shall maintain a record of brachytherapy source accountability required by §175.103(f)(3) of this Code for 3 years.

(ii) For temporary implants, the record shall include-
(A) The number and activity of sources removed from storage, the time and date they were removed from storage, the name of the individual who removed them from storage, and the location of use; and
(B) The number and activity of sources returned to storage, the time and date they were returned to storage, and the name of the individual who returned them to storage.
(iii) For permanent implants, the record shall include-
(A) The number and activity of sources removed from storage, the date they were removed from storage, and the name of the individual who removed them from storage;
(B) The number and activity of sources not implanted, the date they were returned to storage, and the name of the individual who returned them to storage; and
(C) The number and activity of sources permanently implanted in the patient or human research subject.
(26) *Records of calibration measurements of brachytherapy sources*.
(i) A licensee shall maintain a record of the calibrations of brachytherapy sources required by §175.103(f)(7) of this Code for 3 years after the last use of the source.
(ii) The record shall include-
(A) The date of the calibration;
(B) The manufacturer's name, model number, and serial number for the source and the instruments used to calibrate the source;
(C) The source output or activity;
(D) The source positioning accuracy within the applicators; and
(E) The name of the individual, the source manufacturer, or the calibration laboratory that performed the calibration.
(27) *Records of decay of strontium-90 sources for ophthalmic treatments*.
(i) A licensee shall maintain a record of the activity of a strontium-90 source required by §175.103(f)(8) of this Code for the life of the source.
(ii) The record shall include-
(A) The date and initial activity of the source as determined under §175.103(f)(7) of this Code; and
(B) For each decay calculation, the date and the source activity as determined under §175.103(f)(8) of this Code.
(28) *Records of installation, maintenance, adjustment, and repair of remote afterloader units, teletherapy units, and gamma stereotactic radiosurgery units*. A licensee shall retain a record of the installation, maintenance, adjustment, and repair of remote afterloader units, teletherapy units, and gamma stereotactic radiosurgery units as required by §175.103(h)(3) of this Code for the duration of the license. For each installation, maintenance, adjustment and repair, the record shall include the date and description of the service, and name(s) and license number(s) of the individual(s) who performed the work. For teletherapy unit source exchanges, the manufacturer's name, model number and serial number for both the teletherapy unit and source shall be recorded.
(29) *Records of safety procedures*. A licensee shall retain a copy of the procedures required by §§175.103 (d)(2) and 175.103(h)(5)(i)(D) of this Code until the licensee no longer possesses the remote afterloader, teletherapy unit, or gamma stereotactic radiosurgery unit.
(30) *Records of dosimetry equipment used with remote afterloader units, teletherapy units, and gamma stereotactic radiosurgery units*.

(i) A licensee shall retain a record of the calibration, intercomparison, and comparisons of its dosimetry equipment done in accordance with §175.103(h)(8) of this Code for the duration of the license.
(ii) For each calibration, intercomparison, or comparison, the record shall include-
(A) The date;
(B) The manufacturer's name, model numbers and serial numbers of the instruments that were calibrated, intercompared, or compared as required by subparagraphs (i) and (ii) of §175.103(h)(8) of this Code;
(C) The correction factor that was determined from the calibration or comparison or the apparent correction factor that was determined from an intercomparison; and
(D) The names of the individuals who performed the calibration, intercomparison, or comparison
(E) and evidence that the intercomparison meeting was sanctioned by a calibration laboratory or radiologic physics center accredited by AAPM.
(31) *Records of teletherapy, remote afterloader, and gamma stereotactic radiosurgery full calibrations*.
(i) A licensee shall maintain a record of the teletherapy unit, remote afterloader unit, and gamma stereotactic radiosurgery unit full calibrations required by §§175.103(h)(9),(10), and (11) of this Code for 3 years.
(ii) The record shall include-
(A) The date of the calibration;
(B) The manufacturer's name, model number, and serial number of the teletherapy, remote afterloader, and gamma stereotactic radiosurgery unit(s), the source(s), and the instruments used to calibrate the unit(s);
(C) The results and an assessment of the full calibrations;
(D) The results of the autoradiograph required for low dose-rate remote afterloader units; and
(E) The signature of the authorized medical physicist who performed the full calibration.
(32) *Records of periodic spot-checks for teletherapy units*.
(i) A licensee shall retain a record of each periodic spot-check for teletherapy units required by §175.103(h)(12) of this Code for 3 years.
(ii) The record shall include-
(A) The date of the spot-check;
(B) The manufacturer's name, model number, and serial number of the teletherapy unit, source and instrument used to measure the output of the teletherapy unit;
(C) An assessment of timer linearity and constancy;
(D) The calculated on-off error;
(E) A determination of the coincidence of the radiation field and the field indicated by the light beam localizing device;
(F) The determined accuracy of each distance measuring and localization device;
(G) The difference between the anticipated output and the measured output;
(H) Notations indicating the operability of each entrance door electrical interlock, each electrical or mechanical stop, each source exposure indicator light, and the viewing and intercom system and doors; and
(I) The name of the individual who performed the periodic spot-check and the signature of the authorized medical physicist who reviewed the record of the spot-check.
(iii) A licensee shall retain a copy of the procedures required by §175.103(h)(12) of this Code until the licensee no longer possesses the teletherapy unit.

(33) *Records of periodic spot-checks for remote afterloader units*.
(i) A licensee shall retain a record of each spot-check for remote afterloader units required by §175.103(h)(13) of this Code for 3 years.
(ii) The record shall include, as applicable-
(A) The date of the spot-check;
(B) The manufacturer's name, model number, and serial number for the remote afterloader unit and source;
(C) An assessment of timer accuracy;
(D) Notations indicating the operability of each entrance door electrical interlock, radiation monitors, source exposure indicator lights, viewing and intercom systems, and clock and decayed source activity in the unit's computer; and
(E) The name of the individual who performed the periodic spot-check and the signature of the authorized medical physicist who reviewed the record of the spot-check.
(iii) A licensee shall retain a copy of the procedures required by §175.103(h)(13)(ii) of this Code until the licensee no longer possesses the remote afterloader unit.
(34) *Records of periodic spot-checks for gamma stereotactic radiosurgery units*.
(i) A licensee shall retain a record of each spot-check for gamma stereotactic radiosurgery units required by §175.103(h)(14) of this Code for 3 years.
(ii) The record shall include-
(A) The date of the spot-check;
(B) The manufacturer's name, model number, and serial number for the gamma stereotactic radiosurgery unit and the instrument used to measure the output of the unit;
(C) An assessment of timer linearity and accuracy;
(D) The calculated on-off error;
(E) A determination of trunnion centricity;
(F) The difference between the anticipated output and the measured output;
(G) An assessment of source output against computer calculations;
(H) Notations indicating the operability of radiation monitors, helmet microswitches, emergency timing circuits, emergency off buttons, electrical interlocks, source exposure indicator lights, viewing and intercom systems, timer termination, treatment table retraction mechanism, and stereotactic frames and localizing devices (trunnions); and
(I) The name of the individual who performed the periodic spot-check and the signature of the authorized medical physicist who reviewed the record of the spot-check.
(iii) A licensee shall retain a copy of the procedures required by §175.103(h)(14)(ii) of this Code until the licensee no longer possesses the gamma stereotactic radiosurgery unit.
(35) *Records of additional technical requirements for mobile remote afterloader units*.
(i) A licensee shall retain a record of each check for mobile remote afterloader units required by §175.103(h)(15) of this Code for 3 years.
(ii) The record shall include-
(A) The date of the check;
(B) The manufacturer's name, model number, and serial number of the remote afterloader unit;
(C) Notations accounting for all sources before the licensee departs from a facility;
(D) Notations indicating the operability of each entrance door electrical interlock, radiation monitors, source exposure indicator lights, viewing and intercom system, applicators, source transfer tubes, and transfer tube applicator interfaces, and source positioning accuracy; and
(E) The signature of the individual who performed the check.

(36) *Records of surveys of therapeutic treatment units*.
(i) A licensee shall maintain a record of radiation surveys of treatment units made in accordance with §175.103(h)(16) of this Code for the duration of use of the unit.
(ii) The record shall include-
(A) The date of the measurements;
(B) The manufacturer's name, model number and serial number of the treatment unit, source, and instrument used to measure radiation levels;
(C) Each dose rate measured around the source while the unit is in the off position and the average of all measurements; and
(D) The signature of the individual who performed the test.
(37) *Records of 5-year inspection for teletherapy and gamma stereotactic radiosurgery units*.
(i) A licensee shall maintain a record of the 5-year inspections for teletherapy and gamma stereotactic radiosurgery units required by §175.103(h)(19) of this Code for the duration of use of the unit.
(ii) The record shall contain-
(A) The inspector's radioactive materials license number;
(B) The date of inspection;
(C) The manufacturer's name and model number and serial number of both the treatment unit and source;
(D) A list of components inspected and serviced, and the type of service; and
(E) The signature of the inspector.
(38) *Maintenance of records*. (i) Each record required by this section shall be legible throughout the specified retention period. The record shall be the original or a reproduced copy or a microform, provided that the copy or microform is authenticated by authorized personnel and that the microform is capable of producing a clear copy throughout the required retention period. The record may also be stored in electronic media with the capability for producing legible, accurate, and complete records during the required retention period. Records, such as letters, drawings, and specifications, shall include all pertinent information, such as stamps, initials, and signatures.
(ii) The licensee shall maintain adequate safeguards against tampering with and loss of records.
(iii) The discontinuance or curtailment of activities does not relieve any person who possesses any radiation source of responsibility for retaining all records required by this Code.
(l) *Reports.* (1) *Reports of stolen, lost, or missing licensed or registered sources of radiation.* (i) *Telephone reports.* Each licensee or registrant shall report to the Department by telephone as follows:
(A) immediately after its occurrence becomes known to the licensee or registrant, stolen, lost, or missing licensed or registered radioactive material in an aggregate quantity equal to or greater than 1,000 times the quantity specified in Appendix C of this section under such circumstances that it appears to the licensee or registrant that an exposure could result to individuals in unrestricted areas; or
(B) within 30 days after its occurrence becomes known to the licensee or registrant, lost, stolen, or missing licensed or registered radioactive material in an aggregate quantity greater than 10 times the quantity specified in Appendix C of this section that is still missing.
(C) immediately after its occurrence becomes known to the registrant, a stolen, lost, or missing radiation machine.

(ii) *Written reports.* Each licensee or registrant required to make a report pursuant to §175.03(l)(1)(i) shall, within thirty (30) days after making the telephone report, make a written report to the Department setting forth the following information:

(A) a description of the licensed or registered source of radiation involved, including, for radioactive material, the kind, quantity, and chemical and physical form; and, for radiation machines, the manufacturer, model and serial number, type and maximum energy of radiation emitted;

(B) a description of the circumstances under which the loss or theft occurred; and

(C) a statement of disposition, or probable disposition, of the licensed or registered source of radiation involved; and

(D) exposures of individuals to radiation, circumstances under which the exposures occurred, and the possible total effective dose equivalent to persons in unrestricted areas; and

(E) actions that have been taken, or will be taken, to recover the source of radiation; and

(F) procedures or measures that have been, or will be, adopted to ensure against a recurrence of the loss or theft of licensed or registered sources of radiation.

(iii) Subsequent to filing the written report, the licensee or registrant shall also report additional substantive information on the loss or theft within thirty (30) days after the licensee or registrant learns of such information.

(iv) The licensee or registrant shall prepare any report filed with the Department pursuant to §175.03(l)(1)(ii) so that names of individuals who may have received exposure to radiation are stated in a separate and detachable portion of the report.

(2) *Notification of incidents.* (i) *Immediate notification.* Notwithstanding other requirements for notification, each licensee or registrant shall immediately report each event involving byproduct, source, or special nuclear material or a source of radiation possessed by the licensee or registrant that may have caused or threatens to cause any of the following conditions:

(A) an individual to receive:

(a) a total effective dose equivalent of 0.25 Sv (25 rem) or more; or

(b) a lens dose equivalent of 0.75 Sv (75 rem) or more; or

(c) a shallow dose equivalent to the skin or extremities or a total organ dose equivalent of 2.5 Gy (250 rad) or more; or

(B) the release of radioactive material, inside or outside of a restricted area, so that, had an individual been present for 24 hours, the individual could have received an intake five (5) times the occupational ALI. This provision does not apply to locations where personnel are not normally stationed during routine operations, such as hot-cells or process enclosures.

(ii) *Twenty-four hour notification.* Each licensee or registrant shall, within 24 hours of discovery of the event, report to the Department each event involving loss of control of a licensed or registered source of radiation possessed by the licensee or registrant that may have caused, or threatens to cause, any of the following conditions:

(A) an individual to receive, in a period of 24 hours:

(a) a total effective dose equivalent exceeding 0.05 Sv (5 rem); or

(b) a lens dose equivalent exceeding 0.15 Sv (15 rem); or

(c) a shallow dose equivalent to the skin or extremities or a total organ dose equivalent exceeding 0.5 Sv (50 rem); or

(B) the release of radioactive material, inside or outside of a restricted area, so that, had an individual been present for 24 hours, the individual could have received an intake in excess of one

occupational ALI. This provision does not apply to locations where personnel are not normally stationed during routine operations, such as hot-cells or process enclosures.

(iii) The licensee or registrant shall prepare each report filed with the Department pursuant to §175.03(l)(2) so that names of individuals who have received exposure to sources of radiation are stated in a separate and detachable portion of the report.

(iv) Licensees or registrants shall make the reports required by §175.03(l)(2)(i) and (ii) to the Department by telephone, telegram, mailgram, or facsimile.

(v) The provisions of §175.03(l)(2) do not apply to doses that result from planned special exposures, provided such doses are within the limits for planned special exposures and are reported pursuant to §175.03(l)(4).

(3) *Reports of exposures, radiation levels, and concentrations of radioactive material exceeding the limits.* (i) *Reportable events.* In addition to the notification required by §175.03(l)(2), each licensee or registrant shall submit a written report within thirty (30) days after learning of any of the following occurrences:

(A) incidents for which notification is required by §175.03(l)(2); or

(B) doses in excess of any of the following:

(a) the occupational dose limits for adults in §175.03(c)(1); or

(b) the occupational dose limits for a minor in §175.03(c)(7); or

(c) the limits for an embryo/fetus of a declared pregnant woman in §175.03(c)(8); or

(d) the limits for an individual member of the public in §175.03(d)(1); or

(e) any applicable limit in the license or registration; or

(C) levels of radiation or concentrations of radioactive material in:

(a) a restricted area in excess of applicable limits in the license or registration; or

(b) an unrestricted area in excess of 10 times the applicable limit set forth in this Code or in the license or registration, whether or not involving exposure of any individual in excess of the limits in §175.03(d)(1).

(ii) *Contents of reports.* (A) Each report required by §175.03(l)(3)(i) shall describe the extent of exposure of individuals to radiation and radioactive material, including, as appropriate:

(a) estimates of each individual's dose; and

(b) the levels of radiation and concentrations of radioactive material involved; and

(c) the cause of the elevated exposures, dose rates, or concentrations; and

(d) corrective steps taken or planned to ensure against a recurrence, including the schedule for achieving conformance with applicable limits, generally applicable environmental standards, and associated license or registration conditions.

(B) Each report filed pursuant to §175.03(l)(3)(i) shall include for each individual exposed: the name, social security account number, and date of birth. With respect to the limit for the embryo/fetus in §175.03(c)(8), the identifiers should be those of the declared pregnant woman. The report shall be prepared so that this information is stated in a separate and detachable portion of the report.

(iii) All licensees or registrants who make reports pursuant to §175.03(l)(3)(i) shall submit the report in writing to the Department.

(4) *Reports of planned special exposures.* The licensee or registrant shall submit a written report to the Department within 30 days following any planned special exposure conducted in accordance with §175.03(c)(6), informing the Department that a planned special exposure was conducted and indicating the date the planned special exposure occurred and the information required by §175.03(k)(7).

(5) *Reports of individual monitoring.* (i) This section applies to each person licensed or registered by the Department to:

(A) possess or use at any time, for processing or manufacturing for distribution pursuant to this Code, radioactive material in quantities exceeding any one of the following quantities:

	Activity[a]	
Radionuclide	Ci	GBq
Cesium-137	1	37
Cobalt-60	1	37
Gold-198	100	3,700
Iodine-131	1	37
Iridium-192	10	370
Krypton-85	1,000	37,000
Promethium-147	10	370
Technetium-99m	1,000	37,000

[a] The Department may require as a license condition, or by rule, regulation, or order pursuant to §175.03(n)(1), reports from licensees or registrants who are licensed or registered to use radionuclides not on this list, in quantities sufficient to cause comparable radiation levels.

(ii) Each licensee or registrant in a category listed in §175.03(l)(5)(i) shall submit an annual report of the results of individual monitoring carried out by the licensee or registrant for each individual for whom monitoring was required by §175.03(f)(2) during that year. The licensee or registrant may include additional data for individuals for whom monitoring was provided but not required. The licensee or registrant shall use form RAD-5 or equivalent or electronic media containing all the information required by form RAD-5.

(iii) The licensee or registrant shall file the report required by §175.03(l)(5)(ii), covering the preceding year, on or before April 30 of each year. The licensee or registrant shall submit the report to the Department.

(6) *Notifications and reports to individuals.* (i) Requirements for notification and reports to individuals of exposure to radiation or radioactive material are specified in §175.04 of this Code.

(ii) When a licensee or registrant is required pursuant to §175.03(l)(3) to report to the Department any exposure of an individual to radiation or radioactive material, the licensee or registrant shall also notify the individual. Such notice shall be transmitted at a time not later than the transmittal to the Department, and shall comply with the provisions of §175.04 of this Code.

(7) *Reports of leaking or contaminated sealed sources.* The licensee or registrant shall file a report within five (5) days with the Department if the test for leakage or contamination required pursuant to §175.03(e)(1) indicates a sealed source is leaking or contaminated. The report shall include the equipment involved, the test results and the corrective action taken.

(8) *Event reporting.* (i) *Immediate report.* Each licensee or registrant shall notify the Department as soon as possible, but not later than four (4) hours, after the discovery of an event that prevents immediate preventive actions necessary to avoid exposures to radiation or

radioactive material that could exceed regulatory limits or releases of licensed material that could exceed regulatory limits (events may include fires, explosions, toxic gas releases, *etc.*).

(ii) *Twenty-four hour report.* Each licensee or registrant shall notify the Department within twenty-four (24) hours after the discovery of any of the following events involving regulated sources of radiation:

(A) An unplanned contamination event that:

(a) requires access to the contaminated area, by workers or the public, to be restricted for more than 24 hours by imposing additional radiological controls or by prohibiting entry into the area;

(b) involves a quantity of material greater than five (5) times the lowest annual limit on intake specified in Appendix B of §175.03 of this Code for the material; and

(c) has access to the area restricted for a reason other than to allow isotopes with a half-life of less than 24 hours to decay prior to decontamination.

(B) An event in which equipment is disabled or fails to function as designed when:

(a) the equipment is required by regulation or license condition to prevent releases exceeding regulatory limits, or to mitigate the consequences of an accident;

(b) the equipment is required to be available and operable when it is disabled or fails to function; and

(c) no redundant equipment is available and operable to perform the required safety function.

(C) An event that requires unplanned medical treatment at a medical facility of an individual with spreadable radioactive contamination on the individual's clothing or body.

(D) An unplanned fire or explosion damaging any regulated radiation source or any device, container or equipment containing licensed material when:

(a) the quantity of material involved is greater than five (5) times the lowest annual limit on intake specified in Appendix B of §175.03 for the material; and

(b) the damage affects the integrity of the licensed material or its container.

(iii) *Preparation and submission of reports.* Reports made by licensees in response to requirements of subparagraphs (i) and (ii) of this paragraph must be made as follows:

(A) *Licensees shall make reports required by subparagraphs (i) and (ii) of this paragraph by telephone to the Department.* To the extent that the information is available at the time of notification, the information provided in these reports must include:

(a) the caller's name and call back telephone number;

(b) a description of the event, including date and time;

(c) the exact location of the event;

(d) the isotopes, quantities, and chemical and physical form of the licensed material involved; and

(e) any personnel radiation exposure data available.

(B) *Written report.* Each licensee or registrant who makes a report required by subparagraphs (i) and (ii) of this paragraph shall submit a written follow up report to the Department within thirty (30) days of the initial report. The reports must include the following:

(a) a description of the event, including the probable cause and the manufacturer and model number, if applicable, of any equipment that failed or malfunctioned;

(b) the isotopes, quantities and chemical and physical form of the licensed material involved;

(c) corrective actions taken or planned and the results of any evaluations or assessments; and

(d) the extent of exposure of individuals to radiation or to radioactive materials without identification of individuals by name.

(9) *Report and notification of a medical event*.

(i) A licensee or registrant shall report any event, except for an event that results from patient intervention, in which the administration of radiation, byproduct material or radiation from byproduct material results in-
(A) A dose that differs from the prescribed dose or dose that would have resulted from the prescribed dosage by more than 0.05 Sv (5 rem) effective dose equivalent, 0.5 Sv (50 rem) to an organ or tissue, or 0.5 Sv (50 rem) shallow dose equivalent to the skin; and
(*a*) The total dose delivered differs from the prescribed dose by 20 percent or more;

(*b*) The total dosage delivered differs from the prescribed dosage by 20 percent or more or falls outside the prescribed dosage range; or
(*c*) The fractionated dose delivered differs from the prescribed dose, for a single fraction, by 50 percent or more.
(B) A dose that exceeds 0.05 Sv (5 rem) effective dose equivalent, 0.5 Sv (50 rem) to an organ or tissue, or 0.5 Sv (50 rem) shallow dose equivalent to the skin from any of the following-
(*a*) An administration of a wrong radioactive drug containing byproduct material;
(*b*) An administration of a radioactive drug containing byproduct material by the wrong route of administration;
(*c*) An administration of a dose or dosage to the wrong individual or human research subject;
(*d*) An administration of a dose or dosage delivered by the wrong mode of treatment; or
(*e*) A leaking sealed source.
(C) A dose to the skin or an organ or tissue other than the treatment site that exceeds by 0.5 Sv (50 rem) to an organ or tissue and 50 percent or more of the dose expected from the administration defined in the written directive (excluding, for permanent implants, seeds that were implanted in the correct site but migrated outside the treatment site).
(D) A therapeutic radiation dose in any fraction of a fractionated treatment such that the administered dose in the individual treatment or fraction differs from the dose ordered for that individual treatment or fraction by more than 50 percent.
(ii) A licensee/certified registrant shall be required to make a record of, but not report, a therapeutic radiation dose from any source other than a radiopharmaceutical, radiobiologic or brachytherapy source such that errors in computation, calibration, time of exposure, treatment geometry or equipment malfunction result in a calculated total treatment dose differing from the final prescribed total treatment dose ordered by more than 10 percent.
(iii) A licensee/certified registrant shall report any event resulting from intervention of a patient or human research subject in which the administration of radiation, byproduct material or radiation from byproduct material results or will result in unintended permanent functional damage to an organ or a physiological system, as determined by a physician.
(iv) The licensee/certified registrant shall notify by telephone the Department no later than the next calendar day after discovery of the medical event.
(v) The licensee/certified registrant shall submit a written report to the Department within 15 days after discovery of the medical event. This reporting requirement may be satisfied by submitting to the Department a copy of the incident report filed with the New York State Department of Health pursuant to 10 NYCRR §405.8, provided, however, that such report contains all information required by this Code.
(A) The written report shall include-
(*a*) The licensee's/certified registrant's name;
(*b*) The name of the prescribing physician;

(*c*) A brief description of the event;
(*d*) Why the event occurred;
(*e*) The effect, if any, on the individual(s) who received the administration;
(*f*) What actions, if any, have been taken or are planned to prevent recurrence; and
(*g*) Certification that the licensee/certified registrant notified the individual (or the individual's responsible relative or guardian), and if not, why not.

(B) The report may not contain the individual's name or any other information that could lead to identification of the individual.
(vi) The licensee/certified registrant shall provide notification of the event to the referring physician and also notify the individual who is the subject of the medical event no later than 24 hours after its discovery, unless the referring physician personally informs the licensee/certified registrant either that he or she will inform the individual or that, based on medical judgment, telling the individual would be harmful. The licensee/certified registrant is not required to notify the individual without first consulting the referring physician. If the referring physician or the affected individual cannot be reached within 24 hours, the licensee/certified registrant shall notify the individual as soon as possible thereafter. The licensee/certified registrant may not delay any appropriate medical care for the individual, including any necessary remedial care as a result of the medical event, because of any delay in notification. To meet the requirements of this paragraph, the notification of the individual who is the subject of the medical event may be made instead to that individual's responsible relative or guardian. If a verbal notification is made, the licensee/certified registrant shall inform the individual, or appropriate responsible relative or guardian, that a written description of the event can be obtained from the licensee upon request. The licensee/certified registrant shall provide such a written description if requested.
(vii) Aside from the notification requirement, nothing in this section affects any rights or duties of licensees/certified registrants and physicians in relation to each other, to individuals affected by the medical event, or to that individual's responsible relatives or guardians.
(viii) A licensee/certified registrant shall:
(A) Annotate a copy of the report provided to the Department with the:
(*a*) Name of the individual who is the subject of the event; and
(*b*) Social security number or other identification number, if one has been assigned, of the individual who is the subject of the event; and
(B) Provide a copy of the annotated report to the referring physician, if other than the licensee/certified registrant, no later than 15 days after the discovery of the event.
(ix) Records and reports of medical events.
(A) *Diagnostic medical events involving radioactive material*.
(*a*) Records of medical events which involve diagnostic procedures and the corrective actions taken pursuant to §175.07(b)(1)(ix) of this Code shall be retained for 6 years; and
(*b*) if such a medical event results in a dose to the patient exceeding 50 millisieverts (5 rem) to the whole body or 500 millisieverts (50 rem) to any individual organ, or involves the administration of iodine-125 or iodine-131 in the form of iodide in a quantity greater than 1 megabecquerel (30 microcuries), the licensee or registrant shall notify the Department in writing within fifteen (15) days and make and retain a record of such event for six (6) years.
(B) *Diagnostic medical events involving diagnostic radiation equipment*.
(a) Records of medical events which involve diagnostic radiation equipment and the corrective actions taken pursuant to §175.07(b)(1)(ix) of this Code shall be retained for six (6) years; and

(b) if such a medical event results in an unintended dose to the skin of the patient greater than 2 Sv (200 rem) to the same anatomical area, or results in an unintended dose to any organ greater than 0.5 Sv (50 rem), or results in an unintended dose to the whole body greater than 0.05 Sv (5 rem) total effective dose, the licensee or registrant shall notify the Department in writing within fifteen (15) days and make and retain a record of such event for six (6) years.
(c) If a diagnostic medical event involving diagnostic radiation equipment results in the wrong patient, the wrong exam or the wrong anatomical site being imaged, the licensee or registrant shall notify the Department in writing within fifteen (15) days and make and retain a record of such event for six (6) years.
(C) *Therapy medical events*.
(*a*) When a recordable therapy medical event as defined in §175.02(a) of this Code is discovered, in which the percentage of error is equal to or less than 20 percent, the licensee or registrant shall immediately investigate the cause and take corrective action; and
(*b*) the licensee or registrant shall make and retain a record of all recordable therapy medical events as defined in §175.02(a) of this Code. The record shall contain all the information required by §175.103 of this Code and shall be retained for six (6) years.
(D) *Records and reports of diagnostic and therapy medical events*.
The record shall contain the names of all individuals involved in the event (including the treating physician, allied health personnel, the patient and the patient's referring physician), the patient's social security number or identification number if one has been assigned, a description of the event, the effect on the patient (including sequelae, prognosis and follow-up actions) and actions taken to prevent recurrence.
(10) *Report and notification of a dose to an embryo/fetus or a nursing child*.
(i) A licensee or registrant shall report any dose to an embryo/fetus that is greater than 50 mSv (5 rem) dose equivalent that is a result of an administration of radiation, byproduct material or radiation from byproduct material to a pregnant individual unless the dose to the embryo/fetus was specifically approved, in advance, by the authorized user.
(ii) A licensee or registrant shall report any dose to a nursing child that is a result of an administration of radiation or byproduct material to a breast-feeding individual that-
(A) Is greater than 50 mSv (5 rem) total effective dose equivalent; or
(B) Has resulted in unintended permanent functional damage to an organ or a physiological system of the child, as determined by a physician.
(iii) The licensee or registrant shall notify by telephone the Department no later than the next calendar day after discovery of a dose to the embryo/fetus or nursing child that requires a report in subparagraphs (i) or (ii) of this paragraph.
(iv) The licensee or registrant shall submit a written report to the Department within 15 days after discovery of a dose to the embryo/fetus or nursing child that requires a report in subparagraphs (i) and (ii) of this paragraph.
(A) The written report shall include-
(*a*) The licensee's or registrant’s name;
(*b*) The name of the prescribing physician;
(*c*) A brief description of the event;
(*d*) Why the event occurred;
(*e*) The effect, if any, on the embryo/fetus or the nursing child;
(*f*) What actions, if any, have been taken or are planned to prevent recurrence; and

(*g*) Certification that the licensee or registrant notified the pregnant individual or mother (or the mother's or child's responsible relative or guardian), and if not, why not.
(B) The report shall not contain the individual's or child's name or any other information that could lead to identification of the individual or child.
(v) The licensee or registrant shall provide notification of the event to the referring physician and also notify the pregnant individual or mother, both hereafter referred to as the mother, no later than 24 hours after discovery of an event that would require reporting under subparagraphs (i) and (ii) of this paragraph, unless the referring physician personally informs the licensee or registrant either that he or she will inform the mother or that, based on medical judgment, telling the mother would be harmful. The licensee or registrant is not required to notify the mother without first consulting with the referring physician. If the referring physician or mother cannot be reached within 24 hours, the licensee shall make the appropriate notifications as soon as possible thereafter. The licensee or registrant may not delay any appropriate medical care for the embryo/fetus or for the nursing child, including any necessary remedial care as a result of the event, because of any delay in notification. To meet the requirements of this paragraph, the notification may be made to the mother's or child's responsible relative or guardian instead of the mother. If a verbal notification is made, the licensee or registrant shall inform the mother, or the mother's or child's responsible relative or guardian, that a written description of the event can be obtained from the licensee upon request. The licensee or registrant shall provide such a written description if requested.
(vi) A licensee or registrant shall:
(A) Annotate a copy of the report provided to the Department with the:
(*a*) Name of the pregnant individual or the nursing child who is the subject of the event; and
(*b*) Social security number or other identification number, if one has been assigned, of the pregnant individual or the nursing child who is the subject of the event; and
(B) Provide a copy of the annotated report to the referring physician, if other than the licensee or registrant, no later than 15 days after the discovery of the event.
(m) *Exemptions and variances*. The Department may grant, upon either its own initiative or an application by an interested person, an exemption or variance from any requirement in this Code when the Department finds that such exemption or variance will not result in an undue danger to life or property from radiation hazards.
(n) *Additional requirements.* (1) Notwithstanding any exemptions set forth in this Code:
(i) The Department may, by rule, regulation or order, impose upon any person who sells, transfers, assembles, repairs, receives, produces, possesses, or uses any radiation source, such requirements, in addition to those set forth in this Code, as it deems appropriate or necessary to protect the public health and safety and to minimize danger to life or property from radiation hazards.
(ii) The Department may suspend, revoke, or amend any license, certified registration or registration issued pursuant to this Code when it finds that any person is not in compliance with this Code, or other laws, ordinances, rules, or regulations of the Department or this City.
(iii) The Department may order the owner, person in charge or the radiation safety officer of an installation, or any other person owning or responsible for a radiation source, to take such additional precautions or procedures as it may determine are necessary to prevent contamination or the over-exposure of persons to ionizing radiation or to otherwise protect the public health and safety. Except where the public health requires immediate action, no such order shall be issued

until the person to be ordered is notified by any effective means of communication and is given an opportunity to be heard by such personnel of the Department as the Commissioner may designate.
(2) Vacating premises. Each specific licensee or registrant shall notify the Department in writing of intent to vacate not less than 30 days before vacating or relinquishing possession or control of premises which may have been contaminated with radioactive material as a result of licensed or registered activities. When deemed necessary by the Department, the licensee shall decontaminate the premises to such levels as the Department may specify.
(3) The Department may by order require the removal through an authorized person, or the surrender to the Department, of any radiation source by any person who:
(i) does not hold, or continue to hold, a valid license, certified registration or registration issued by the Department;
(ii) is not able or equipped, or who fails to observe with regard to such radiation source those radiation protection standards as are established by the Department or who uses such radiation source in violation of law, this Code, order of the Department, or as set forth in a license, certified registration or registration issued therefor by the Department. Such person shall decontaminate any premises which may have been contaminated with radioactive material as a result of licensed or registered activities to such radiation levels as the Department may specify. The expenses incidental to such transfer, surrender, and/or decontamination shall be borne by such person responsible for the source.
(4) When necessary or desirable in order to aid in determining the extent of any individual's exposure to radiation subsequent to any radiation accident, contamination, theft or loss, the licensee or registrant shall comply with all orders of the Department directing such licensee or registrant to make available to such individual appropriate medical evaluation services or appropriate tests and to furnish to the Department a copy of the reports of such evaluation or test.

APPENDIX A
Protection Factors for Respirators[1]

	Modes[3]	Protection Factors[4]	Tested & Certified Equipment National Institute for Occupational Safety & Health/Mine Health & Safety Administration tests for permeability
<>			
I. AIR-PURIFYING RESPIRATORS[6]			
Facepiece, half-mask[7]	NP	10	30 CFR 11, Subpart K.
Facepiece, full	NP	50	
Facepiece, half-mask full, or hood	PP	1000	

II. ATMOSPHERE-SUPPLYING RESPIRATORS

1. Air-line respirator

Facepiece, half-mask	CF	1000	30 CFR 11, Subpart J.
Facepiece, half-mask	D	5	
Facepiece, full	CF	2000	
Facepiece, full	D	5	
Facepiece, full	PD	2000	
Hood	CF	8	
Suit	CF	9	10

2. Self-contained breathing apparatus (SCBA)

Facepiece, full	D	50	30 CFR 11, Subpart H.
Facepiece, full	PD	10,000[11]	
Facepiece, full	RD	50	
Facepiece, full	RP	5,000[12]	

III. COMBINATION RESPIRATORS

Any combination of air-purifying and atmosphere-supplying respirators	Protection factor for type and mode of operation as listed above.	30 CFR 11, Sec. 11.63(b)

Footnotes:

1. For use in the selection of respiratory protective equipment to be used only where the contaminants have been identified and the concentrations, or possible concentrations, are known.
2. The licensee shall ensure that no objects, materials or substances, such as facial hair, or any conditions that interfere with the face, face-piece seal or valve function, and that are under the control of the respirator wearer, are present between the skin of the wearer's face and the sealing surface of a tightfitting respirator face-piece. Hoods and suits are excepted.
3. The mode symbols are defined as follows:

CF = continuous flow
D = demand

NP = negative pressure, that is, negative phase during inhalation
PD = pressure demand, that is, always positive pressure
PP = positive pressure
RD = demand, recirculating or closed circuit

RP = pressure demand, recirculating or closed circuit

4. a. The protection factor is a measure of the degree of protection afforded by a respirator, defined as the ratio of the concentration of airborne radioactive material outside the respiratory protective equipment to that inside the equipment, usually inside the facepiece, under conditions of use. It is applied to the ambient airborne concentration to estimate the concentrations inhaled by the wearer according to the following formula:

$$\text{Concentration inhaled} = \frac{\text{Ambient airborne concentration}}{\text{Protection factor}}$$

b. The protection factors apply:

(i) Only for individuals trained in using respirators and wearing properly fitted respirators that are used and maintained under supervision in a well-planned respiratory protective program.

(ii) For air-purifying respirators only when high efficiency particulate filters, above 99.97% removal efficiency by thermally generated 0.3 mm dioctylphthalate (DOP) test or equivalent, are used in atmospheres not deficient in oxygen and not containing radioactive gas or vapor respiratory hazards.

(iii) No adjustment is to be made for the use of sorbents against radioactive material in the form of gases or vapors.

(iv) For atmosphere-supplying respirators only when supplied with adequate respirable air. Respirable air shall be provided of the quality and quantity required in accordance with the National Institute for Occupational Safety and Health and the Mine Safety and Health Administration certification described in 30 CFR 11. Oxygen and air shall not be used in the same apparatus.

5. Excluding radioactive contaminants that present an absorption or submersion hazard. For tritium oxide, approximately one-third of the intake occurs by absorption through the skin so that an overall protection factor of less than 2 is appropriate when atmosphere-supplying respirators are used to protect against tritium oxide. If the protection factor for respiratory protective equipment is 5, the effective protection factor for tritium is about 1.4; with protection factors of 10, the effective factor for tritium oxide is about 1.7; and with protection factors of 100 or more, the effective factor for tritium oxide is about 1.9. Air-purifying respirators are not suitable for protection against tritium oxide. See also footnote 9 concerning supplied-air suits.

6. Canisters and cartridges shall not be used beyond service-life limitations.

7. Under-chin type only. This type of respirator is not satisfactory for use where it might be possible, such as, if an accident or emergency were to occur, for the ambient airborne concentrations to reach instantaneous values greater than 10 times the pertinent values in Table 1, Column 3 of Appendix B of §175.03. This type of respirator is not suitable for protection against plutonium or other high-toxicity materials. The mask is to be tested for fit prior to use, each time it is donned.

8. a. Equipment shall be operated in a manner that ensures that proper air flow-rates are maintained. A protection factor of no more than 1000 may be utilized for tested-and-certified supplied-air hoods when a minimum air flow of 6 cubic feet per minute (0.17 m^3/min) is maintained and calibrated air line pressure gauges or flow measuring devices are used. A protection factor of up to 2000 may be used for tested and certified hoods only when the air flow is maintained at the manufacturer's recommended maximum rate for the equipment, this rate is greater than 6 cubic feet per minute (0.17 m^3/min) and calibrated air line pressure gauges or flow measuring devices are used.

b. The design of the supplied-air hood or helmet, with a minimum flow of 6 cubic feet per minute (0.17 m^3/min) of air, may determine its overall efficiency and the protection it provides. For example, some hoods aspirate contaminated air into the breathing zone when the wearer works with hands-over-head. This aspiration may be overcome if a short cape-like extension to the hood is worn under a coat or overalls. Other limitations specified by the approval agency shall be considered before using a hood in certain types of atmospheres. See footnote 9.

9. Appropriate protection factors shall be determined, taking into account the design of the suit and its permeability to the contaminant under conditions of use. Standby rescue persons are required whenever one piece atmosphere-supplying suits, or any combination of supplied air respiratory protection device and personnel protective equipment are used from which an unaided individual would have difficulty extricating himself or herself. The standby persons must be equipped with communications devices and respiratory protection devices or other apparatus appropriate for the potential hazards. The standby rescue persons shall observe or otherwise maintain continuous communication with the workers (visual, voice, signal line, telephone, radio, or other suitable means), and be immediately available to assist them in case of a failure of the air supply or for any other reason that requires relief

from distress. A sufficient number of standby rescue persons must be immediately available to assist all users of this type of equipment and to provide effective emergency rescue if needed.

10. No approval schedules are currently available for this equipment. Equipment is to be evaluated by testing or on the basis of reliable test information.

11. This type of respirator may provide greater protection and be used as an emergency device in unknown concentrations for protection against inhalation hazards. External radiation hazards and other limitations to permitted exposure, such as skin absorption, must be taken into account in such circumstances.

12. Quantitative fit testing shall be performed on each individual, and no more than 0.02% leakage is allowed with this type of apparatus. Perceptible outward leakage of gas from this or any positive pressure self-contained breathing apparatus is unacceptable because service life will be reduced substantially. Special training in the use of this type of apparatus shall be provided to the wearer.

Note 1:

Protection factors for respirators approved by the U.S. Bureau of Mines and the National Institute for Occupational Safety and Health, according to applicable approvals for respirators for type and mode of use to protect against airborne radionuclides, may be used to the extent that they do not exceed the protection factors listed in this table. The protection factors listed in this table may not be appropriate to circumstances where chemical or other respiratory hazards exist in addition to radioactive hazards. The selection and use of respirators for such circumstances should take into account applicable approvals of the U.S. Bureau of Mines and the National Institute for Occupational Safety and Health.

Note 2:

Radioactive contaminants, for which the concentration values in Table 1, Column 3 of Appendix B of §175.03 are based on internal dose due to inhalation, may present external exposure hazards at higher concentrations. Under these circumstances, limitations on occupancy may have to be governed by external dose limits.

Definitions:

"Airpurifying respirator" means a respirator with an air purifying filter, cartridge, or canister that removes specific air contaminants by passing ambient air through the air purifying element.

"Assigned protection factor" or "APF" means the expected workplace level of respiratory protection that would be provided by a properly functioning respirator or a class of respirators to properly fitted and trained users. Operationally, the inhaled concentration can be estimated by dividing the ambient airborne concentration by the APF.

"Atmosphere-supplying respirator" means a respirator that supplies the respirator user with breathing air from a source independent of the ambient atmosphere, and includes supplied air respirators (SARs) and self-contained breathing apparatus (SCBA) units.

"Demand respirator" means an atmosphere-supplying respirator that admits breathing air to the face-piece only when a negative pressure is created inside the face-piece by inhalation.

"Disposable respirator" means a respirator for which maintenance is not intended and that is designed to be discarded after excessive breathing resistance, sorbent exhaustion, physical damage, or end of service-life renders it unsuitable for use. Examples of this type of respirator are a disposable halfmask respirator or a disposable escape-only self contained breathing apparatus (SCBA).

"Filtering face-piece" or "dust mask" means a negative pressure particulate respirator with a filter as an integral part of the face-piece or with the entire face-piece composed of the filtering medium, not equipped with elastomeric sealing surfaces and adjustable straps.

"Fit factor" means a quantitative estimate of the fit of a particular respirator to a specific individual, and typically estimates the ratio of the concentration of a substance in ambient air to its concentration inside the respirator when worn.

"Fit test" means the use of a protocol to qualitatively or quantitatively evaluate the fit of a respirator on an individual.

"Helmet" means a rigid respiratory inlet covering that also provides head protection against impact and penetration.

"Hood" means a respiratory inlet covering that completely covers the head and neck and may also cover portions of the shoulders and torso.

"Loosefitting face-piece" means a respiratory inlet covering that is designed to form a partial seal with the face.

"Negative pressure respirator" or "tight fitting respirator" means a respirator in which the air pressure inside the face-piece is negative during inhalation with respect to the ambient air pressure outside the respirator.

"Positive pressure respirator" means a respirator in which the pressure inside the respiratory inlet covering exceeds the ambient air pressure outside the respirator.

"Powered air purifying respirator" or "PAPR" means an air-purifying respirator that uses a blower to force the ambient air through air purifying elements to the inlet covering.

"Pressure demand respirator" means a positive pressure atmosphere-supplying respirator that admits breathing air to the face-piece when the positive pressure is reduced inside the face-piece by inhalation.

"Qualitative fit test" or "QLFT" means a pass/fail fit test to assess the adequacy of respirator fit that relies on the individual's response to the test agent.

"Quantitative fit test" "QNFT" means an assessment of the adequacy of respirator fit by numerically measuring the amount of leakage into the respirator.

"Self-contained breathing apparatus" or "SCBA" means an atmosphere-supplying respirator for which the breathing air source is designed to be carried by the user.

"Supplied air respirator" or "SAR" or "airline respirator" means an atmosphere-supplying respirator for which the source of breathing air is not designed to be carried by the user.

"Tight-fitting face-piece" means a respiratory inlet covering that forms a complete seal with the face.

"User seal check" or "fit check" means an action conducted by the respirator user to determine if the respirator is properly sealed to the face. Examples include negative pressure check, positive pressure check, irritant smoke check, or isoamylacetate check.

APPENDIX B
ANNUAL LIMITS ON INTAKE (ALI) AND DERIVED AIR CONCENTRATIONS (DAC) OF RADIONUCLIDES FOR OCCUPATIONAL EXPOSURE; EFFLUENT CONCENTRATIONS; CONCENTRATIONS FOR RELEASE TO SANITARY SEWERAGE

Introduction

For each radionuclide, Table I indicates the chemical form which is to be used for selecting the appropriate ALI or DAC value. The ALIs and DACs for inhalation are given for an aerosol with an activity median aerodynamic diameter (AMAD) of 1 mm, micron, and for three classes (D,W,Y) of radioactive material, which refer to their retention (approximately days, weeks or years) in the pulmonary region of the lung. This classification applies to a range of clearance half-times for D if less than 10 days, for W from 10 to 100 days, and for Y greater than 100 days. Table 2 provides concentration limits for airborne and liquid effluents released to the general environment. Table 3 provides concentration limits for discharges to sanitary sewerage.

Note: The values in Tables 1, 2, and 3 are presented in the computer "E" notation. In this notation a value of 6E-02 represents a value of 6×10^{-2} or 0.06, 6E2 represents 6×10^{2} or 600, and 6E0 represents 6×10^{0} or 6.

Table 1 "Occupational Exposures"

Note that the columns in Table I of this appendix captioned "Oral Ingestion ALI," "Inhalation ALI," and "DAC," are applicable to occupational exposure to radioactive material.

The ALIs in this appendix are the annual intakes of given radionuclide by "Reference Man" which would result in either (1) a committed effective dose equivalent of 0.05 Sv (5 rem), stochastic ALI, or (2) a committed dose equivalent of 0.5 Sv (50 rem) to an organ or tissue, non-stochastic ALI. The stochastic ALIs were derived to result in a risk, due to irradiation of organs and tissues, comparable to the risk associated with deep dose equivalent to the whole body of 0.05 Sv (5 rem). The derivation includes multiplying the committed dose equivalent to an organ or

tissue by a weighting factor, w_T. This weighting factor is the proportion of the risk of stochastic effects resulting from irradiation of the organ or tissue, T, to the total risk of stochastic effects when the whole body is irradiated uniformly. The values of w_T are listed under the definition of weighting factor in §175.02(a)(247). The non-stochastic ALIs were derived to avoid non-stochastic effects, such as prompt damage to tissue or reduction in organ function.

A value of $w_T = 0.06$ is applicable to each of the five organs or tissues in the "remainder" category receiving the highest dose equivalents, and the dose equivalents of all other remaining tissues may be disregarded. The following portions of the gastrointestinal tract—stomach, small intestine, upper large intestine, and lower large intestine—are to be treated as four separate organs.

Note that the dose equivalents for an extremity, skin and lens of the eye are not considered in computing the committed effective dose equivalent, but are subject to limits that must be met separately.

When an ALI is defined by the stochastic dose limit, this value alone is given. When an ALI is determined by the non-stochastic dose limit to an organ, the organ or tissue to which the limit applies is shown, and the ALI for the stochastic limit is shown in parentheses. Abbreviated organ or tissue designations are used:

LLI wall = lower large intestine wall;
St wall = stomach wall;
Blad wall = bladder wall; and
Bone surf = bone surface.

The use of the ALIs listed first, the more limiting of the stochastic and non-stochastic ALIs, will ensure that non-stochastic effects are avoided and that the risk of stochastic effects is limited to an acceptably low value. If, in a particular situation involving a radionuclide for which the non-stochastic ALI is limiting, use of that non-stochastic ALI is considered unduly conservative, the licensee may use the stochastic ALI to determine the committed effective dose equivalent. However, the licensee shall also ensure that the 0.5 Sv (50 rem) dose equivalent limit for any organ or tissue is not exceeded by the sum of the external deep dose equivalent plus the internal committed dose equivalent to that organ, not the effective dose. For the case where there is no external dose contribution, this would be demonstrated if the sum of the fractions of the non-stochastic ALIs (ALI_{ns}) that contribute to the committed dose equivalent to the organ receiving the highest dose does not exceed unity, that is, S (intake (in mCi) of each radionuclide/ALI_{ns}) # 1.0. If there is an external deep dose equivalent contribution of H_d, then this sum must be less than 1—(H_d/50), instead of 1.0.

Note that the dose equivalents for an extremity, skin, and lens of the eye are not considered in computing the committed effective dose equivalent, but are subject to limits that must be met separately.

The derived air concentration (DAC) values are derived limits intended to control chronic occupational exposures. The relationship between the DAC and the ALI is given by:

$$DAC = ALI \text{ (in mCi)}/(2000 \text{ hr-working yr}^{-1} \times 60 \text{ min-hr}^{-1} \times 2 \times 10^4 \text{ ml-min}^{-1})$$
$$=[ALI/2.4 \times 10^9]\text{mCi/ml},$$

where 2×10^4 Ml is the volume of air breathed per minute at work by Reference Man under working conditions of light work.

The DAC values relate to one of two modes of exposure: either external submersion or the internal committed dose equivalents resulting from inhalation of radioactive materials. DACs based upon submersion are for immersion in a semi-infinite cloud of uniform concentration and apply to each radionuclide separately.

The ALI and DAC values include contributions to exposure by the single radionuclide named and any in-growth of daughter radionuclides produced in the body by decay of the parent. However, intakes that include both the parent and daughter radionuclides should be treated by the general method appropriate for mixtures.

The values of ALI and DAC do not apply directly when the individual both ingests and inhales a radionuclide, when the individual is exposed to a mixture of radionuclides by either inhalation or ingestion or both, or when the individual is exposed to both internal and external irradiation. See §175.03(c)(2). When an individual is exposed to radioactive materials which fall under several of the translocation classifications of the same radionuclide, such as, Class D, Class W, or Class Y, the exposure may be evaluated as if it were a mixture of different radionuclides.

It should be noted that the classification of a compound as Class D, W, or Y is based on the chemical form of the compound and does not take into account the radiological half-life of different radionuclides. For this reason, values are given for Class D, W, and Y compounds, even for very short-lived radionuclides.

Table 2 "Effluent Concentrations"

The columns in Table 2 of this appendix captioned "Effluents," "Air" and "Water" are applicable to the assessment and control of dose to the public, particularly in the implementation of the provisions of §175.03(d)(2). The concentration values given in Columns 1 and 2 of Table 2 are equivalent to the radionuclide concentrations which, if inhaled or ingested continuously over the course of a year, would produce a total effective dose equivalent of 0.5 mSv (0.05 rem).

Consideration of non-stochastic limits has not been included in deriving the air and water effluent concentration limits because non-stochastic effects are presumed not to occur at or below the dose levels established for individual members of the public. For radionuclides, where the non-stochastic limit was governing in deriving the occupational DAC, the stochastic ALI was used in deriving the corresponding airborne effluent limit in Table 2. For this reason, the DAC and airborne effluent limits are not always proportional as they were in the previous version of the New York City Health Code in Table 4 of §175.117.

The air concentration values listed in Table 2, Column 1 were derived by one of two methods. For those radionuclides for which the stochastic limit is governing, the occupational stochastic inhalation ALI was divided by 2.4×10^9, relating the inhalation ALI to the DAC, as explained above, and then divided by a factor of 300. The factor of 300 includes the following components: a factor of 50 to relate the 0.05 Sv (5 rem) annual occupational dose limit to the 0.1 rem limit for members of the public, a factor of 3 to adjust for the difference in exposure time and the inhalation rate for a worker and that for members of the public; and a factor of 2 to adjust the occupational values, derived for adults, so that they are applicable to other age groups.

For those radionuclides for which submersion, that is external dose, is limiting, the occupational DAC in Table 1, Column 3 was divided by 219. The factor of 219 is composed of a factor of 50, as described above, and a factor of 4.38 relating occupational exposure for 2,000

hours per year to full-time exposure (8,760 hours per year). Note that an additional factor of 2 for age considerations is not warranted in the submersion case.

The water concentrations were derived by taking the most restrictive occupational stochastic oral ingestion ALI and dividing by 7.3×10^7 . The factor of 7.3×10^7 (ml) includes the following components: the factors of 50 and 2 described above and a factor of 7.3×10^5 (ml) which is the annual water intake of Reference Man.

Note 2 of this appendix provides groupings of radionuclides which are applicable to unknown mixtures of radionuclides. These groupings, including occupational inhalation ALIs and DACs, air and water effluent concentrations and releases to sewer, require demonstrating that the most limiting radionuclides in successive classes are absent. The limit for the unknown mixture is defined when the presence of one of the listed radionuclides cannot be definitely excluded as being present either from knowledge of the radionuclide composition of the source or from actual measurements.

Table 3 "Concentration for Releases to Sewerage"

The monthly average concentrations for release to sanitary sewerage are applicable to the provisions in §175.104(c). The concentration values were derived by taking the most restrictive occupational stochastic oral ingestion ALI and dividing by 7.3×10^6 (ml). The factor of 7.3×10^6 (ml) is composed of a factor of 7.3×10^5 (ml), the annual water intake by Reference Man, and a factor of 10, such that the concentrations, if the sewage released by the licensee were the only source of water ingested by a Reference Man during a year, would result in a committed effective dose equivalent of 5 mSv (0.5 rem).

LIST OF ELEMENTS

Name	Symbol	Atomic Number
Actinium	Ac	89
Aluminium	Al	13
Americium	Am	95
Antimony	Sb	51
Argon	Ar	18
Arsenic	As	33
Astatine	At	85
Barium	Ba	56
Berkelium	Bk	97
Beryllium	Be	4
Bismuth	Bi	83
Bromine	Br	35

Cadmium	Cd	48
Calcium	Ca	20
Califormium	Cf	98
Carbon	C	6
Cerium	Ce	58
Cesium	Cs	55
Chlorine	Cl	17
Chromium	Cr	24
Cobalt	Co	27
Copper	Cu	29
Curium	Cm	96
Dysprosium	Dy	66
Einsteinium	Es	99
Erbium	Er	68
Europium	Eu	63
Femium	Fm	100
Fluorine	F	9
Francium	Fr	87
Gadolinium	Gd	64
Gallium	Ga	31
Germanium	Ge	32
Gold	Au	79
Hafniim	Hf	72
Holmium	Ho	67
Hydrogen	H	1
Indium	In	49
Iodine	I	53
Iridium	Ir	77
Iron	Fe	26
Krypton	Kr	36
Lanthanum	La	57
Lead	Pb	82

Lutetium	Lu	71
Magnesium	Mg	12
Manganese	Mn	25
Mendelevium	Md	101
Mercury	Hg	80
Molybdenum	Mo	42
Neodymium	Nd	60
Neptunium	Np	93
Nickel	Ni	28
Niobium	Nb	41
Nitrogen	N	7
Osmium	Os	76
Oxygen	O	8
Palladium	Pd	46
Phosphorus	P	15
Platinum	Pt	78
Plutonium	Pu	94
Polonium	Po	84
Potassium	K	19
Praseodymium	Pr	59
Promethium	Pm	61
Protactinium	Pa	91
Radium	Ra	88
Radon	Rn	86
Rhenium	Re	75
Rhodium	Rh	45
Rubidium	Rb	37
Ruthenium	Ru	44
Samarium	Sm	62
Scandium	Sc	21
Selenium	Se	34
Silicon	Si	14

Silver	Ag	47
Sodium	Na	11
Strontium	Sr	38
Sulfur	S	16
Tantaium	Ta	73
Technetium	Tc	43
Tellurium	Te	52
Terbium	Tb	65
Thallium	Tl	81
Thorium	Th	90
Thulium	Tm	69
Tin	Sn	50
Titanium	Ti	22
Tungsten	W	74
Uranium	U	92
Vanadium	V	23
Xenon	Xe	54
Yterbium	Yb	70
Yttrium	Y	39
Zinc	Zn	30
Zirconium	Zr	40

Table 1 Occupational Exposures			**Table 2 Effluent Concentrations**			**Table 3 Concentration for Releases to Sewerage**	
Col. 1		**Col. 2**	**Col. 3**			**Col. 1**	**Col. 2**
Atomic No.	**Radionuclide**	**Class**	**Oral Ingestion**	**Inhalation**	**DAC (mCi/ml)**	**Air (mCi/ml)**	**Water (mCi/ml)**	**Monthly Average Concentration**

(mCi/ml)

1	Hydrogen-3	Water, DAC includes skin absorption	8E4	8E4	2E-5	1E-7	1E-3	1E-2
		Gas (HT or T_2) Submersion[1]: Use above values as HT and T_2 oxidize in air and in the body to HTO						
4	Beryllium-7	W, all compounds except those given for Y	4E4	2E4	9E-6	3E-8	6E-4	6E-3
		Y, oxides, halides, and nitrates	—	2E4	8E-6	3E-8	—	—
4	Beryllium-10	W, see ^{7}Be	1E3	2E2	6E-8	2E-10	—	—
			LLI wall (1E3)	—	—	—	2E-5	2E-4
		Y, see ^{7}Be	—	1E1	6E-9	2E-11	—	—
6	Carbon-11[2]	Monoxide	—	1E6	5E-4	2E-6	—	—
		Dioxide	—	6E5	3E-4	9E-7	—	—
		Compounds	4E5	4E5	2E-4	6E-7	6E-3	6E-2
6	Carbon-14	Monoxide	—	2E6	7E-4	2E-6	—	—
		Dioxide	—	2E5	9E-5	3E-7	—	—
		Compounds	2E3	2E3	1E-6	3E-9	3E-5	3E-4
9	Fluorine-18[2]	D, fluorides of H,	5E4	7E4	3E-5	1E-7	—	—
		Li, Na, K, Rb,	St wall					
		Cs, and Fr	(5E4)	—	—	—	7E-4	7E-3
		W, fluorides of Be, Mg, Ca, Sr, Ba, Ra, Al, Ga, In, Tl, As, Sb, Bi, Fe,	—	9E4	4E-5	1E-7	—	—

		Ru, Os, Co, Ni, Pd, Pt, Cu, Ag, Au, Zn, Cd, Hg, Sc, Y, Ti, Zr, V, Nb, Ta, Mn, Tc, and Re						
		Y, lanthanum fluoride	—	8E4	3E-5	1E-7	—	—
11	Sodium-22	D, all compounds	4E2	6E2	3E-7	9E-10	6E-6	6E-5
11	Sodium-24	D, all compounds	4E3	5E3	2E-6	7E-9	5E-5	5E-4
12	Magnesium-28	D, all compounds except those given for W	7E2	2E3	7E-7	2E-9	9E-6	9E-5
		W, oxides, hydroxides, carbides, halides, and nitrates	—	1E3	5E-7	2E-9	—	—
13	Aluminum-26	D, all compounds except those given for W	4E2	6E1	3E-8	9E-11	6E-6	6E-5
		W, oxides, hydroxides, carbides, halides, and nitrates	—	9E1	4E-8	1E-10	—	—
14	Silicon-31	D, all compounds except those given for W and Y	9E3	3E4	1E-5	4E-8	1E-4	1E-3
		W, oxides, hydroxides, carbides,	—	3E4	1E-5	5E-8	—	—

		and nitrates						
		Y, aluminosili - cate glass	—	3E4	1E-5	4E-8	—	—
14	Silicon-32	D, see ^{31}Si	2E3	2E2	1E-7	3E-10	—	—
			LLI wall (3E3)	—	—	—	4E-5	4E-4
		W, see ^{31}Si	—	1E2	5E-8	2E-10	—	—
		Y, see ^{31}Si	—	5E0	2E-9	7E-12	—	—
15	Phosphorus-32	D, all compounds except phosphates given for W	6E2	9E2	4E-7	1E-9	9E-6	9E-5
		W, phosphates of Zn^2, S^3, Mg^2, Fe^3, Bi^3, and lanthanides	—	4E2	2E-7	5E-10	—	—
15	Phosphorus-33	D, see ^{32}P	6E3	8E3	4E-6	1E-8	8E-5	8E-4
		W, see ^{32}P	—	3E3	1E-6	4E-9	—	—
16	Sulfur-35	Vapor	—	1E4	6E-6	2E-8	—	—
		D, sulfides and sulfates	1E4	2E4	7E-6	2E-8	—	—
		except those	LLI wall					
		given for W	(8E3)	—	—	—	1E-4	1E-3
		W, elemental	6E3					
		sulfur, sulfides of Sr, Ba, Ge, Sn, Pb, As, Sb, Bi, Cu, Ag, Au, Zn, Cd, Hg, W, and Mo. Sulfates of	—	2E3	9E-7	3E-9	—	—

		Ca, Sr, Ba, Ra, As, Sb, and Bi						
17	Chlorine-36	D, chlorides of H, Li, Na, K, Rb, Cs, and Fr	2E3	2E3	1E-6	3E-9	2E-5	2E-4
		W, chlorides of lanthanides, Be, Mg, Ca, Sr, Ba, Ra, Al, Ga, In, Tl, Ge, Sn, Pb, As, Sb, Bi, Fe, Ru, Os, Co, Rh, Ir, Ni, Pd, Pt, Cu, Ag, Au, Zn, Cd, Hg, Sc, Y, Ti, Zr, Hf, V, Nb, Ta, Cr, Mo, W, Mn, Tc, and Re	—	2E2	1E-7	3E-10	—	—
17	Chlorine-38[2]	D, see ^{36}Cl	2E4	4E4	2E-5	6E-8	—	—
			St wall (3E4)	—	—	—	3E-4	3E-3
		W, see ^{36}Cl	—	5E4	2E-5	6E-8	—	—
17	Chlorine-39[2]	D, see ^{36}Cl	2E4	5E4	2E-5	7E-8	—	—
			St wall (4E4)	—	—	—	5E-4	5E-3
		W, see ^{36}Cl	—	6E4	2E-5	8E-8	—	—
18	Argon-37	Submersion[1]	—	—	1E0	6E-3	—	—
18	Argon-39	Submersion[1]	—	—	2E-4	8E-7	—	—
18	Argon-41	Submersion[1]	—	—	3E-6	1E-8	—	—
19	Potassium-40	D, all	3E2	4E2	2E-7	6E-10	4E-6	4E-5

		compounds						
19	Potassium-42	D, all compounds	5E3	5E3	2E-6	7E-9	6E-5	6E-4
19	Potassium-43	D, all compounds	6E3	9E3	4E-6	1E-8	9E-5	9E-4
19	Potassium-44[2]	D, all compounds	2E4	7E4	3E-5	9E-8	—	—
			St wall (4E4)	—	—	—	5E-4	5E-3
19	Potassium-45[2]	D, all compounds	3E4	1E5	5E-5	2E-7	—	—
			St wall (5E4)	—	—	—	7E-4	7E-3
20	Calcium-41	W, all compounds	3E3	4E3	2E-6	—	—	—
			Bone surf (4E3)	Bone surf (4E3)	—	5E-9	6E-5	6E-4
20	Calcium-45	W, all compounds	2E3	8E2	4E-7	1E-9	2E-5	2E-4
20	Calcium-47	W, all compounds	8E2	9E2	4E-7	1E-9	1E-5	1E-4
21	Scandium-43	Y, all compounds	7E3	2E4	9E-6	3E-8	1E-4	1E-3
21	Scandium-44m	Y, all compounds	5E2	7E2	3E-7	1E-9	7E-6	7E-5
21	Scandium-44	Y, all compounds	4E3	1E4	5E-6	2E-8	5E-5	5E-4
21	Scandium-46	Y, all compounds	9E2	2E2	1E-7	3E-10	1E-5	1E-4
21	Scandium-47	Y, all compounds	2E3	3E3	1E-6	4E-9	—	—
			LLI wall (3E3)	—	—	—	4E-5	4E-4
21	Scandium-48	Y, all compounds	8E2	1E3	6E-7	2E-9	1E-5	1E-4
21	Scandium-49[2]	Y, all compounds	2E4	5E4	2E-5	8E-8	3E-4	3E-3
22	Titanium-44	D, all compounds except those given for W and Y	3E2	1E1	5E-9	2E-11	4E-6	4E-5
		W, oxides, hydroxides, carbides, halides,	—	3E1	1E-8	4E-11	—	—

		and nitrates						
		Y, SrTi0	—	6E0	2E-9	8E-12	—	—
22	Titanium-45	D, see ^{44}Ti	9E3	3E4	1E-5	3E-8	1E-4	1E-3
		W, see ^{44}Ti	—	4E4	1E-5	5E-8	—	—
		Y, see ^{44}Ti	—	3E4	1E-5	4E-8	—	—
23	Vanadium-47[2]	D, all compounds	3E4	8E4	3E-5	1E-7	—	—
		except those	St wall					
		given for W	(3E4)	—	—	—	4E-4	4E-3
		W, oxides, hydroxides, carbides, and halides	—	1E5	4E-5	1E-7	—	—
23	Vanadium-48	D, see ^{47}V	6E2	1E3	5E-7	2E-9	9E-6	9E-5
		W, see ^{47}V	—	6E2	3E-7	9E-10	—	—
23	Vanadium-49	D, see ^{47}V	7E4	3E4	1E-5	—	—	—
			LLI wall (9E4)	Bone surf (3E4)	—	5E-8	1E-3	1E-2
		W, see ^{47}V	—	2E4	8E-6	2E-8	—	—
24	Chromium-48	D, all compounds except those given for W and Y	6E3	1E4	5E-6	2E-8	8E-5	8E-4
		W, halides and nitrates	—	7E3	3E-6	1E-8	—	—
		Y, oxides and hydroxides	—	7E3	3E-6	1E-8	—	—
24	Chromium-49[2]	D, see ^{48}Cr	3E4	8E4	4E-5	1E-7	4E-4	4E-3
		W, see ^{48}Cr	—	1E5	4E-5	1E-7	—	—
		Y, see ^{48}Cr	—	9E4	4E-5	1E-7	—	—
24	Chromium-51	D, see ^{48}Cr	4E4	5E4	2E-5	6E-8	5E-4	5E-3
		W, see ^{48}Cr	—	2E4	1E-5	3E-8	—	—
		Y, see ^{48}Cr	—	2E4	8E-6	3E-8	—	—
25	Manganese-51[2]	D, all compounds except those given	2E4	5E4	2E-5	7E-8	3E-4	3E-3

		for W						
		W, oxides, hydroxides, halides, and nitrates	—	6E4	3E-5	8E-8	—	—
25	Manganese-52m[2]	D, see ^{51}Mn	3E4	9E4	4E-5	1E-7	—	—
			St wall (4E4)	—	—	—	5E-4	5E-3
		W, see ^{51}Mn	—	1E5	4E-5	1E-7	—	—
25	Manganese-52	D, see ^{51}Mn	7E2	1E3	5E-7	2E-9	1E-5	1E-4
		W, see ^{51}Mn	—	9E2	4E-7	1E-9	—	—
25	Manganese-53	D, see ^{51}Mn	5E4	1E4	5E-6	—	7E-4	7E-3
			—	Bone surf (2E4)	—	3E-8	—	—
		W, see ^{51}Mn	—	1E4	5E-6	2E-8	—	—
25	Manganese-54	D, see ^{51}Mn	2E3	9E2	4E-7	1E-9	3E-5	3E-4
		W, see ^{51}Mn	—	8E2	3E-7	1E-9	—	—
25	Manganese-56	D, see ^{51}Mn	5E3	2E4	6E-6	2E-8	7E-5	7E-4
		W, see ^{51}Mn	—	2E4	9E-6	3E-8	—	—
26	Iron-52	D, all compounds except those given for W	9E2	3E3	1E-6	4E-9	1E-5	1E-4
		W, oxides, hydroxides, and halides	—	2E3	1E-6	3E-9	—	—
26	Iron-55	D, see ^{52}Fe	9E3	2E3	8E-7	3E-9	1E-4	1E-3
		W, see ^{52}Fe	—	4E3	2E-6	6E-9	—	—
26	Iron-59	D, see ^{52}Fe	8E2	3E2	1E-7	5E-10	1E-5	1E-4
		W, see ^{52}Fe	—	5E2	2E-7	7E-10	—	—
26	Iron-60	D, see ^{52}Fe	3E1	6E0	3E-9	9E-12	4E-7	4E-6
		W, see ^{52}Fe	—	2E1	8E-9	3E-11	—	—
27	Cobalt-55	W, all	1E3	3E3	1E-6	4E-9	2E-5	2E-4

		compounds except those given for Y						
		Y, oxides, hydroxides, halides, and nitrates	—	3E3	1E-6	4E-9	—	—
27	Cobalt-56	W, see ^{55}Co	5E2	3E2	1E-7	4E-10	6E-6	6E-5
		Y, see ^{55}Co	4E2	2E2	8E-8	3E-10	—	—
27	Cobalt-57	W, see ^{55}Co	8E3	3E3	1E-6	4E-9	6E-5	6E-4
		Y, see ^{55}Co	4E3	7E2	3E-7	9E-10	—	—
27	Cobalt-58m	W, see ^{55}Co	6E4	9E4	4E-5	1E-7	8E-4	8E-3
		Y, see ^{55}Co	—	6E4	3E-5	9E-8	—	—
27	Cobalt-58	W, see ^{55}Co	2E3	1E3	5E-7	2E-9	2E-5	2E-4
		Y, see ^{55}Co	1E3	7E2	3E-7	1E-9	—	—
27	Cobalt-60m[2]	W, see ^{55}Co	1E6	4E6	2E-3	6E-6	—	—
			St wall (1E6)	—	—	—	2E-2	2E-1
		Y, see ^{55}Co	—	3E6	1E-3	4E-6	—	—
27	Cobalt-60	W, see ^{55}Co	5E2	2E2	7E-8	2E-10	3E-6	3E-5
		Y, see ^{55}Co	2E2	3E1	1E-8	5E-11	—	—
27	Cobalt-61[2]	W, see ^{55}Co	2E4	6E4	3E-5	9E-8	3E-4	3E-3
		Y, see ^{55}Co	2E4	6E4	2E-5	8E-8	—	—
27	Cobalt-62m[2]	W, see ^{55}Co	4E4	2E5	7E-5	2E-7	—	—
			St wall (5E4)	—	—	—	7E-4	7E-3
		Y, see ^{55}Co	—	2E5	6E-5	2E-7	—	—
28	Nickel-56	D, all compounds except those given for W	1E3	2E3	8E-7	3E-9	2E-5	2E-4
		W, oxides, hydroxides, and carbides	—	1E3	5E-7	2E-9	—	—
		Vapor	—	1E3	5E-7	2E-9	—	—

28	Nickel-57	D, see ^{56}Ni	2E3	5E3	2E-6	7E-9	2E-5	2E-4
		W, see ^{56}Ni	—	3E3	1E-6	4E-9	—	—
		Vapor	—	6E3	3E-6	9E-9	—	—
28	Nickel-59	D, see ^{56}Ni	2E4	4E3	2E-6	5E-9	3E-4	3E-3
		W, see ^{56}Ni	—	7E3	3E-6	1E-8	—	—
		Vapor	—	2E3	8E-7	3E-9	—	—
28	Nickel-63	D, see ^{56}Ni	9E3	2E3	7E-7	2E-9	1E-4	1E-3
		W, see ^{56}Ni	—	3E3	1E-6	4E-9	—	—
		Vapor	—	8E2	3E-7	1E-9	—	—
28	Nickel-65	D, see ^{56}Ni	8E3	2E4	1E-5	3E-8	1E-4	1E-3
		W, see ^{56}Ni	—	3E4	1E-5	4E-8	—	—
		Vapor	—	2E4	7E-6	2E-8	—	—
28	Nickel-66	D, see ^{56}Ni	4E2	2E3	7E-7	2E-9	—	—
			LLI wall (5E2)	—	—	—	6E-6	6E-5
		W, see ^{56}Ni	—	6E2	3E-7	9E-10	—	—
		Vapor	—	3E3	1E-6	4E-9	—	—
29	Copper-60[2]	D, all compounds except those given for W and Y	3E4	9E4	4E-5	1E-7	—	—
			St wall (3E4)	—	—	—	4E-4	4E-3
		W, sulfides, halides, and nitrates	—	1E5	5E-5	2E-7	—	—
		Y, oxides and hydroxides	—	1E5	4E-5	1E-7	—	—
29	Copper-61	D, see ^{60}Cu	1E4	3E4	1E-5	4E-8	2E-4	2E-3
		W, see ^{60}Cu	—	4E4	2E-5	6E-8	—	—
		Y, see ^{60}Cu	—	4E4	1E-5	5E-8	—	—
29	Copper-64	D, see ^{60}Cu	1E4	3E4	1E-5	4E-8	2E-4	2E-3
		W, see ^{60}Cu	—	2E4	1E-5	3E-8	—	—
		Y, see ^{60}Cu	—	2E4	9E-6	3E-8	—	—
29	Copper-67	D, see ^{60}Cu	5E3	8E3	3E-6	1E-8	6E-5	6E-4
		W, see ^{60}Cu	—	5E3	2E-6	7E-9	—	—

		Y, see ^{60}Cu	—	5E3	2E-6	6E-9	—	—
30	Zinc-62	Y, all compounds	1E3	3E3	1E-6	4E-9	2E-5	2E-4
30	Zinc-63[2]	Y, all compounds	2E4	7E4	3E-5	9E-8	—	—
			St wall (3E4)	—	—	—	3E-4	3E-3
30	Zinc-65	Y, all compounds	4E2	3E2	1E-7	4E-10	5E-6	5E-5
30	Zinc-69m	Y, all compounds	4E3	7E3	3E-6	1E-8	6E-5	6E-4
30	Zinc-69[2]	Y, all compounds	6E4	1E5	6E-5	2E-7	8E-4	8E-3
30	Zinc-71m	Y, all compounds	6E3	2E4	7E-6	2E-8	8E-5	8E-4
30	Zinc-72	Y, all compounds	1E3	1E3	5E-7	2E-9	1E-5	1E-4
31	Gallium-65[2]	D, all compounds	5E4	2E5	7E-5	2E-7	—	—
		except those given for W	St wall (6E4)	—	—	—	9E-4	9E-3
		W, oxides, hydroxides, carbides, halides, and nitrates	—	2E5	8E-5	3E-7	—	—
31	Gallium-66	D, see ^{65}Ga	1E3	4E3	1E-6	5E-9	1E-5	1E-4
		W, see ^{65}Ga	—	3E3	1E-6	4E-9	—	—
31	Gallium-67	D, see ^{65}Ga	7E3	1E4	6E-6	2E-8	1E-4	1E-3
		W, see ^{65}Ga	—	1E4	4E-6	1E-8	—	—
31	Gallium-68[2]	D, see ^{65}Ga	2E4	4E4	2E-5	6E-8	2E-4	2E-3
		W, see ^{65}Ga	—	5E4	2E-5	7E-8	—	—
31	Gallium-70[2]	D, see ^{65}Ga	5E4	2E5	7E-5	2E-7	—	—
			St wall (7E4)	—	—	—	1E-3	1E-2
		W, see ^{65}Ga	—	2E5	8E-5	3E-7	—	—
31	Gallium-72	D, see ^{65}Ga	1E3	4E3	1E-6	5E-9	2E-5	2E-4
		W, see ^{65}Ga	—	3E3	1E-6	4E-9	—	—

31	Gallium-73	D, see ^{65}Ga	5E3	2E4	6E-6	2E-8	7E-5	7E-4
		W, see ^{65}Ga	—	2E4	6E-6	2E-8	—	—
32	Germanium-66	D, all compounds except those given for W	2E4	3E4	1E-5	4E-8	3E-4	3E-3
		W, oxides, sulfides, and halides	—	2E4	8E-6	3E-8	—	—
32	Germanium-67[2]	D, see ^{66}Ge	3E4	9E4	4E-5	1E-7	—	—
			St wall (4E4)	—	—	—	6E-4	6E-3
		W, see ^{66}Ge	—	1E5	4E-5	1E-7	—	—
32	Germanium-68	D, see ^{66}Ge	5E3	4E3	2E-6	5E-9	6E-5	6E-4
		W, see ^{66}Ge	—	1E2	4E-8	1E-10	—	—
32	Germanium-69	D, see ^{66}Ge	1E4	2E4	6E-6	2E-8	2E-4	2E-3
		W, see ^{66}Ge	—	8E3	3E-6	1E-8	—	—
32	Germanium-71	D, see ^{66}Ge	5E5	4E5	2E-4	6E-7	7E-3	7E-2
		W, see ^{66}Ge	—	4E4	2E-5	6E-8	—	—
32	Germanium-75[2]	D, see ^{66}Ge	4E4	8E4	3E-5	1E-7	—	—
			St wall (7E4)	—	—	—	9E-4	9E-3
		W, see ^{66}Ge	—	8E4	4E-5	1E-7	—	—
32	Germanium-77	D, see ^{66}Ge	9E3	1E4	4E-6	1E-8	1E-4	1E-3
		W, see ^{66}Ge	—	6E3	2E-6	8E-9	—	—
32	Germanium-78[2]	D, see ^{66}Ge	2E4	2E4	9E-6	3E-8	—	—
			St wall (2E4)	—	—	—	3E-4	3E-3
		W, see ^{66}Ge	—	2E4	9E-6	3E-8	—	—
33	Arsenic-69[2]	W, all compounds	3E4	1E5	5E-5	2E-7	—	—
			St wall					

			(4E4)	—	—	—	6E-4	6E-3
33	Arsenic-70[2]	W, all compounds	1E4	5E4	2E-5	7E-8	2E-4	2E-3
33	Arsenic-71	W, all compounds	4E3	5E3	2E-6	6E-9	5E-5	5E-4
33	Arsenic-72	W, all compounds	9E2	1E3	6E-7	2E-9	1E-5	1E-4
33	Arsenic-73	W, all compounds	8E3	2E3	7E-7	2E-9	1E-4	1E-3
33	Arsenic-74	W, all compounds	1E3	8E2	3E-7	1E-9	2E-5	2E-4
33	Arsenic-76	W, all compounds	1E3	1E3	6E-7	2E-9	1E-5	1E-4
33	Arsenic-77	W, all compounds	4E3	5E3	2E-6	7E-9	—	—
			LLI wall (5E3)	—	—	—	6E-5	6E-4
33	Arsenic-78[2]	W, all compounds	8E3	2E4	9E-6	3E-8	1E-4	1E-3
34	Selenium-70[2]	D, all compounds except those given for W	2E4	4E4	2E-5	5E-8	1E-4	1E-3
		W, oxides, hydroxides, carbides, and elemental Se	1E4	4E4	2E-5	6E-8	—	—
34	Selenium-73m[2]	D, see ^{70}Se	6E4	2E5	6E-5	2E-7	4E-4	4E-3
		W, see ^{70}Se	3E4	1E5	6E-5	2E-7	—	—
34	Selenium-73	D, see ^{70}Se	3E3	1E4	5E-6	2E-8	4E-5	4E-4
		W, see ^{70}Se	—	2E4	7E-6	2E-8	—	—
34	Selenium-75	D, see ^{70}Se	5E2	7E2	3E-7	1E-9	7E-6	7E-5
		W, see ^{70}Se	—	6E2	3E-7	8E-10	—	—
34	Selenium-79	D, see ^{70}Se	6E2	8E2	3E-7	1E-9	8E-6	8E-5
		W, see ^{70}Se	—	6E2	2E-7	8E-10	—	—
34	Selenium-81m[2]	D, see ^{70}Se	4E4	7E4	3E-5	9E-8	3E-4	3E-3
		W, see ^{70}Se	2E4	7E4	3E-5	1E-7	—	—
34	Selenium-81[2]	D, see ^{70}Se	6E4	2E5	9E-5	3E-7	—	—
			St wall					

			(8E4)	—	—	—	1E-3	1E-2
		W, see ^{70}Se	—	2E5	1E-4	3E-7	—	—
34	Selenium-83[2]	D, see ^{70}Se	4E4	1E5	5E-5	2E-7	4E-4	4E-3
		W, see ^{70}Se	3E4	1E5	5E-5	2E-7	—	—
35	Bromine-74m[2]	D, bromides of						
		H, Li, Na, K, Rb, Cs, and Fr	1E4	4E4	2E-5	5E-8	—	—
			St wall (2E4)	—	—	—	3E-4	3E-3
		W, bromides of lanthanides, Be, Mg, Ca, Sr, Ba, Ra, Al, Ga, In, Tl, Ge, Sn, Pb, As, Sb, Bi, Fe, Ru, Os, Co, Rh, Ir, Ni, Pd, Pt, Cu, Ag, Au, Zn, Cd, Hg, Sc, Y, Ti, Zr, Hf, V, Nb, Ta, Mn, Tc, and Re	—	4E4	2E-5	6E-8	—	—
35	Bromine-74[2]	D, see ^{74m}Br	2E4	7E4	3E-5	1E-7	—	—
			St wall (4E4)	—	—	—	5E-4	5E-3
		W, see ^{74m}Br	—	8E4	4E-5	1E-7	—	—
35	Bromine-75[2]	D, see ^{74m}Br	3E4	5E4	2E-5	7E-8	—	—
			St wall (4E4)	—	—	—	5E-4	5E-3
		W, see ^{74m}Br	—	5E4	2E-5	7E-8	—	—
35	Bromine-76	D, see ^{74m}Br	4E3	5E3	2E-6	7E-9	5E-5	5E-4
		W, see ^{74m}Br	—	4E3	2E-6	6E-9	—	—
35	Bromine-77	D, see	2E4	2E4	1E-5	3E-8	2E-4	2E-3

		^{74m}Br						
		W, see ^{74m}Br	—	2E4	8E-6	3E-8	—	—
35	Bromine-80m	D, see ^{74m}Br	2E4	2E4	7E-6	2E-8	3E-4	3E-3
		W, see ^{74m}Br	—	1E4	6E-6	2E-8	—	—
35	Bromine-80[2]	D, see ^{74m}Br	5E4	2E5	8E-5	3E-7	—	—
			St wall (9E4)	—	—	—	1E-3	1E-2
		W, see ^{74m}Br	—	2E5	9E-5	3E-7	—	—
35	Bromine-82	D, see ^{74m}Br	3E3	4E3	2E-6	6E-9	4E-5	4E-4
		W, see ^{74m}Br	—	4E3	2E-6	5E-9	—	—
35	Bromine-83	D, see ^{74m}Br	5E4	6E4	3E-5	9E-8	—	—
			St wall (7E4)	—	—	—	9E-4	9E-3
		W, see ^{74m}Br	—	6E4	3E-5	9E-8	—	—
35	Bromine-84[2]	D, see ^{74m}Br	2E4	6E4	2E-5	8E-8	—	—
			St wall (3E4)	—	—	—	4E-4	4E-3
		W, see ^{74m}Br	—	6E4	3E-5	9E-8	—	—
36	Krypton-74[2]	Submersion[1]	—	—	3E-6	1E-8	—	—
36	Krypton-76	Submersion[1]	—	—	9E-6	4E-8	—	—
36	Krypton-77[2]	Submersion[1]	—	—	4E-6	2E-8	—	—
36	Krypton-79	Submersion[1]	—	—	2E-5	7E-8	—	—
36	Krypton-81	Submersion[1]	—	—	7E-4	3E-6	—	—
36	Krypton-83m[2]	Submersion[1]	—	—	1E-2	5E-5	—	—
36	Krypton-85m	Submersion[1]	—	—	2E-5	1E-7	—	—
36	Krypton-85	Submersion[1]	—	—	1E-4	7E-7	—	—
36	Krypton-87[2]	Submersion[1]	—	—	5E-6	2E-8	—	—

36	Krypton-88	Submersion[1]	—	—	2E-6	9E-9	—	—
37	Rubidium-79[2]	D, all compounds	4E4	1E5	5E-5	2E-7	—	—
			St wall (6E4)	—	—	—	8E-4	8E-3
37	Rubidium-81m[2]	D, all compounds	2E5	3E5	1E-4	5E-7	—	—
			St wall (3E5)	—	—	—	4E-3	4E-2
37	Rubidium-81	D, all compounds	4E4	5E4	2E-5	7E-8	5E-4	5E-3
37	Rubidium-82m	D, all compounds	1E4	2E4	7E-6	2E-8	2E-4	2E-3
37	Rubidium-83	D, all compounds	6E2	1E3	4E-7	1E-9	9E-6	9E-5
37	Rubidium-84	D, all compounds	5E2	8E2	3E-7	1E-9	7E-6	7E-5
37	Rubidium-86	D, all compounds	5E2	8E2	3E-7	1E-9	7E-6	7E-5
37	Rubidium-87	D, all compounds	1E3	2E3	6E-7	2E-9	1E-5	1E-4
37	Rubidium-88[2]	D, all compounds	2E4	6E4	3E-5	9E-8	—	—
			St wall (3E4)	—	—	—	4E-4	4E-3
37	Rubidium-89[2]	D, all compounds	4E4	1E5	6E-5	2E-7	—	—
			St wall (6E4)	—	—	—	9E-4	9E-3
38	Strontium-80[2]	D, all soluble compounds except SrTiO	4E3	1E4	5E-6	2E-8	6E-5	6E-4
		Y, all insoluble compounds and SrTiO	—	1E4	5E-6	2E-8	—	—
38	Strontium-81[2]	D, see ^{80}Sr	3E4	8E4	3E-5	1E-7	3E-4	3E-3
		Y, see ^{80}Sr	2E4	8E4	3E-5	1E-7	—	—
38	Strontium-82	D, see ^{80}Sr	3E2	4E2	2E-7	6E-10	—	—
			LLI wall (2E2)	—	—	—	3E-6	3E-5
		Y, see ^{80}Sr	2E2	9E1	4E-8	1E-10	—	—
38	Strontium-83	D, see ^{80}Sr	3E3	7E3	3E-6	1E-8	3E-5	3E-4
		Y, see ^{80}Sr	2E3	4E3	1E-6	5E-9	—	—

38	Strontium-85m[2]	D, see ^{80}Sr	2E5	6E5	3E-4	9E-7	3E-3	3E-2
		Y, see ^{80}Sr	—	8E5	4E-4	1E-6	—	—
38	Strontium-85	D, see ^{80}Sr	3E3	3E3	1E-6	4E-9	4E-5	4E-4
		Y, see ^{80}Sr	—	2E3	6E-7	2E-9	—	—
38	Strontium-87m	D, see ^{80}Sr	5E4	1E5	5E-5	2E-7	6E-4	6E-3
		Y, see ^{80}Sr	4E4	2E5	6E-5	2E-7	—	—
38	Strontium-89	D, see ^{80}Sr	6E2	8E2	4E-7	1E-9	—	—
			LLI wall (6E2)	—	—	—	8E-6	8E-5
		Y, see ^{80}Sr	5E2	1E2	6E-8	2E-10	—	—
38	Strontium-90	D, see ^{80}Sr	3E1	2E1	8E-9	—	—	—
			Bone surf (4E1)	Bone surf (2E1)	—	3E-11	5E-7	5E-6
		Y, see ^{80}Sr	—	4E0	2E-9	6E-12	—	—
38	Strontium-91	D, see ^{80}Sr	2E3	6E3	2E-6	8E-9	2E-5	2E-4
		Y, see ^{80}Sr	—	4E3	1E-6	5E-9	—	—
38	Strontium-92	D, see ^{80}Sr	3E3	9E3	4E-6	1E-8	4E-5	4E-4
		Y, see ^{80}Sr	—	7E3	3E-6	9E-9	—	—
39	Yttrium-86m[2]	W, all compounds except those given for Y	2E4	6E4	2E-5	8E-8	3E-4	3E-3
		Y, oxides and hydroxides	—	5E4	2E-5	8E-8	—	—
39	Yttrium-86	W, see ^{86m}Y	1E3	3E3	1E-6	5E-9	2E-5	2E-4
		Y, see ^{86m}Y	—	3E3	1E-6	5E-9	—	—
39	Yttrium-87	W, see ^{86m}Y	2E3	3E3	1E-6	5E-9	3E-5	3E-4
		Y, see ^{86m}Y	—	3E3	1E-6	5E-9	—	—
39	Yttrium-88	W, see ^{86m}Y	1E3	3E2	1E-7	3E-10	1E-5	1E-4
		Y, see ^{86m}Y	—	2E2	1E-7	3E-10	—	—
39	Yttrium-90m	W, see ^{86m}Y	8E3	1E4	5E-6	2E-8	1E-4	1E-3
		Y, see ^{86m}Y	—	1E4	5E-6	2E-8	—	—
39	Yttrium-90	W, see ^{86m}Y	4E2 LLI	7E2	3E-7	9E-10	—	—

			wall (5E2)	—	—	—	7E-6	7E-5
		Y, see ^{86m}Y	—	6E2	3E-7	9E-10	—	—
39	Yttrium-91m[2]	W, see ^{86m}Y	1E5	2E5	1E-4	3E-7	2E-3	2E-2
		Y, see ^{86m}Y	—	2E5	7E-5	2E-7	—	—
39	Yttrium-91	W, see ^{86m}Y	5E2 LLI	2E2	7E-8	2E-10	—	—
			wall (6E2)	—	—	—	8E-6	8E-5
		Y, see ^{86m}Y	—	1E2	5E-8	2E-10	—	—
39	Yttrium-92	W, see ^{86m}Y	3E3	9E3	4E-6	1E-8	4E-5	4E-4
		Y, see ^{86m}Y	—	8E3	3E-6	1E-8	—	—
39	Yttrium-93	W, see ^{86m}Y	1E3	3E3	1E-6	4E-9	2E-5	2E-4
		Y, see ^{86m}Y	—	2E3	1E-6	3E-9	—	—
39	Yttrium-94[2]	W, see ^{86m}Y	2E4	8E4	3E-5	1E-7	—	—
			St wall (3E4)	—	—	—	4E-4	4E-3
		Y, see ^{86m}Y	—	8E4	3E-5	1E-7	—	—
39	Yttrium-95[2]	W, see ^{86m}Y	4E4	2E5	6E-5	2E-7	—	—
			St wall (5E4)	—	—	—	7E-4	7E-3
		Y, see ^{86m}Y	—	1E5	6E-5	2E-7	—	—
40	Zirconium-86	D, all compounds except those given for W and Y	1E3	4E3	2E-6	6E-9	2E-5	2E-4
		W, oxides, hydroxides, halides, and nitrates	—	3E3	1E-6	4E-9	—	—
		Y, carbide	—	2E3	1E-6	3E-9	—	—
40	Zirconium-88	D, see ^{86}Zr	4E3	2E2	9E-8	3E-10	5E-5	5E-4
		W, see ^{86}Zr	—	5E2	2E-7	7E-10	—	—
		Y, see ^{86}Zr	—	3E2	1E-7	4E-10	—	—
40	Zirconium-89	D, see ^{86}Zr	2E3	4E3	1E-6	5E-9	2E-5	2E-4
		W, see ^{86}Zr	—	2E3	1E-6	3E-9	—	—
		Y, see ^{86}Zr	—	2E3	1E-6	3E-9	—	—
40	Zirconium-93	D, see ^{86}Zr	1E3 Bone	6E0 Bone	3E-9	—	—	—

			surf (3E3)	surf (2E1)	—	2E-11	4E-5	4E-4
		W, see ^{86}Zr		2E1	1E-8	—	—	—
			—	Bone surf (6E1)	—	9E-11	—	—
		Y, see ^{86}Zr	—	6E1	2E-8	—	—	—
			—	Bone surf (7E1)	—	9E-11	—	—
40	Zirconium-95	D, see ^{86}Zr	1E3	1E2	5E-8	—	2E-5	2E-4
			—	Bone surf (3E2)	—	4E-10	—	—
		W, see ^{86}Zr	—	4E2	2E-7	5E-10	—	—
		Y, see ^{86}Zr	—	3E2	1E-7	4E-10	—	—
40	Zirconium-97	D, see ^{86}Zr	6E2	2E3	8E-7	3E-9	9E-6	9E-5
		W, see ^{86}Zr	—	1E3	6E-7	2E-9	—	—
		Y, see ^{86}Zr	—	1E3	5E-7	2E-9	—	—
41	Niobium-88[2]	W, all compounds except those given for Y	5E4 St wall (7E4)	2E5 —	9E-5 —	3E-7 —	— 1E-3	— 1E-2
		Y, oxides and hydroxides	—	2E5	9E-5	3E-7	—	—
41	Niobium-89[2] (66 min)	W, see ^{88}Nb	1E4	4E4	2E-5	6E-8	1E-4	1E-3
		Y, see ^{88}Nb	—	4E4	2E-5	5E-8	—	—
41	Niobium-89 (122 min)	W, see ^{88}Nb	5E3	2E4	8E-6	3E-8	7E-5	7E-4
		Y, see ^{88}Nb	—	2E4	6E-6	2E-8	—	—
41	Niobium-90	W, see ^{88}Nb	1E3	3E3	1E-6	4E-9	1E-5	1E-4
		Y, see ^{88}Nb	—	2E3	1E-6	3E-9	—	—
41	Niobium-93m	W, see ^{88}Nb	9E3	2E3	8E-7	3E-9	—	—
			LLI wall (1E4)	—	—	—	2E-4	2E-3
		Y, see ^{88}Nb	—	2E2	7E-8	2E-10	—	—
41	Niobium-94	W, see	9E2	2E2	8E-8	3E-10	1E-5	1E-4

		^{88}Nb						
		Y, see ^{88}Nb	—	2E1	6E-9	2E-11	—	—
41	Niobium-95m	W, see ^{88}Nb	2E3	3E3	1E-6	4E-9	—	—
			LLI wall (2E3)	—	—	—	3E-5	3E-4
		Y, see ^{88}Nb	—	2E3	9E-7	3E-9	—	—
41	Niobium-95	W, see ^{88}Nb	2E3	1E3	5E-7	2E-9	3E-5	3E-4
		Y, see ^{88}Nb	—	1E3	5E-7	2E-9	—	—
41	Niobium-96	W, see ^{88}Nb	1E3	3E3	1E-6	4E-9	2E-5	2E-4
		Y, see ^{88}Nb	—	2E3	1E-6	3E-9	—	—
41	Niobium-97[2]	W, see ^{88}Nb	2E4	8E4	3E-5	1E-7	3E-4	3E-3
		Y, see ^{88}Nb	—	7E4	3E-5	1E-7	—	—
41	Niobium-98[2]	W, see ^{88}Nb	1E4	5E4	2E-5	8E-8	2E-4	2E-3
		Y, see ^{88}Nb	—	5E4	2E-5	7E-8	—	—
42	Molybdenum-90	D, all compounds except those given for Y	4E3	7E3	3E-6	1E-8	3E-5	3E-4
		Y, oxides, hydroxides, and MoS	2E3	5E3	2E-6	6E-9	—	—
42	Molybdenum-93m	D, see ^{90}Mo	9E3	2E4	7E-6	2E-8	6E-5	6E-4
		Y, see ^{90}Mo	4E3	1E4	6E-6	2E-8	—	—
42	Molybdenum-93	D, see ^{90}Mo	4E3	5E3	2E-6	8E-9	5E-5	5E-4
		Y, see ^{90}Mo	2E4	2E2	8E-8	2E-10	—	—
42	Molybdenum-99	D, see ^{90}Mo	2E3	3E3	1E-6	4E-9	—	—
			LLI wall (1E3)	—	—	—	2E-5	2E-4
		Y, see ^{90}Mo	1E3	1E3	6E-7	2E-9	—	—
42	Molybdenum-101[2]	D, see ^{90}Mo	4E4	1E5	6E-5	2E-7	—	—
			St wall (5E4)	—	—	—	7E-4	7E-3

		Y, see ^{90}Mo	—	1E5	6E-5	2E-7	—	—
43	Technetium-93m[2]	D, all compounds except those given for W	7E4	2E5	6E-5	2E-7	1E-3	1E-2
		W, oxides, hydroxides, halides, and nitrates	—	3E5	1E-4	4E-7	—	—
43	Technetium-93	D, see ^{93m}Tc	3E4	7E4	3E-5	1E-7	4E-4	4E-3
		W, see ^{93m}Tc	—	1E5	4E-5	1E-7	—	—
43	Technetium-94m[2]	D, see ^{93m}Tc	2E4	4E4	2E-5	6E-8	3E-4	3E-3
		W, see ^{93m}Tc	—	6E4	2E-5	8E-8	—	—
43	Technetium-94	D, see ^{93m}Tc	9E3	2E4	8E-6	3E-8	1E-4	1E-3
		W, see ^{93m}Tc	—	2E4	1E-5	3E-8	—	—
43	Technetium-95m	D, see ^{93m}Tc	4E3	5E3	2E-6	8E-9	5E-5	5E-4
		W, see ^{93m}Tc	—	2E3	8E-7	3E-9	—	—
43	Technetium-95	D, see ^{93m}Tc	1E4	2E4	9E-6	3E-8	1E-4	1E-3
		W, see ^{93m}Tc	—	2E4	8E-6	3E-8	—	—
43	Technetium-96m[2]	D, see ^{93m}Tc	2E5	3E5	1E-4	4E-7	2E-3	2E-2
		W, see ^{93m}Tc	—	2E5	1E-4	3E-7	—	—
43	Technetium-96	D, see ^{93m}Tc	2E3	3E3	1E-6	5E-9	3E-5	3E-4
		W, see ^{93m}Tc	—	2E3	9E-7	3E-9	—	—
43	Technetium-97m	D, see ^{93m}Tc	5E3	7E3	3E-6	—	6E-5	6E-4
			St wall —	(7E3)	—	1E-8	—	—
		W, see ^{93m}Tc	—	1E3	5E-7	2E-9	—	—

43	Technetium-97	D, see ^{93m}Tc	4E4	5E4	2E-5	7E-8	5E-4	5E-3
		W, see ^{93m}Tc	—	6E3	2E-6	8E-9	—	—
43	Technetium-98	D, see ^{93m}Tc	1E3	2E3	7E-7	2E-9	1E-5	1E-4
		W, see ^{93m}Tc	—	3E2	1E-7	4E-10	—	—
43	Technetium-99m	D, see ^{93m}Tc	8E4	2E5	6E-5	2E-7	1E-3	1E-2
		W, see ^{93m}Tc	—	2E5	1E-4	3E-7	—	—
43	Technetium-99	D, see ^{93m}Tc	4E3	5E3	2E-6	—	6E-5	6E-4
			—	St wall (6E3)	—	8E-9	—	—
		W, see ^{93m}Tc	—	7E2	3E-7	9E-10	—	—
43	Technetium-101[2]	D, see ^{93m}Tc	9E4	3E5	1E-4	5E-7	—	—
			St wall (1E5)	—	—	—	2E-3	2E-2
		W, see ^{93m}Tc	—	4E5	2E-4	5E-7	—	—
43	Technetium-104[2]	D, see ^{93m}Tc	2E4	7E4	3E-5	1E-7	—	—
			St wall (3E4)	—	—	—	4E-4	4E-3
		W, see ^{93m}Tc	—	9E4	4E-5	1E-7	—	—
44	Ruthenium-94[2]	D, all compounds except those given for W and Y	2E4	4E4	2E-5	6E-8	2E-4	2E-3
		W, halides	—	6E4	3E-5	9E-8	—	—
		Y, oxides and hydroxides	—	6E4	2E-5	8E-8	—	—
44	Ruthenium-97	D, see ^{94}Ru	8E3	2E4	8E-6	3E-8	1E-4	1E-3
		W, see ^{94}Ru	—	1E4	5E-6	2E-8	—	—
		Y, see ^{94}Ru	—	1E4	5E-6	2E-8	—	—
44	Ruthenium-103	D, see ^{94}Ru	2E3	2E3	7E-7	2E-9	3E-5	3E-4

		W, see ^{94}Ru	—	1E3	4E-7	1E-9	—	—
		Y, see ^{94}Ru	—	6E2	3E-7	9E-10	—	—
44	Ruthenium-105	D, see ^{94}Ru	5E3	1E4	6E-6	2E-8	7E-5	7E-4
		W, see ^{94}Ru	—	1E4	6E-6	2E-8	—	—
		Y, see ^{94}Ru	—	1E4	5E-6	2E-8	—	—
44	Ruthenium-106	D, see ^{94}Ru	2E2	9E1	4E-8	1E-10	—	—
			LLI wall (2E2)	—	—	—	3E-6	3E-5
		W, see ^{94}Ru	—	5E1	2E-8	8E-11	—	—
		Y, see ^{94}Ru	—	1E1	5E-9	2E-11	—	—
45	Rhodium-99m	D, all compounds except those given for W and Y	2E4	6E4	2E-5	8E-8	2E-4	2E-3
		W, halides	—	8E4	3E-5	1E-7	—	—
		Y, oxides and hydroxides	—	7E4	3E-5	9E-8	—	—
45	Rhodium-99	D, see ^{99m}Rh	2E3	3E3	1E-6	4E-9	3E-5	3E-4
		W, see ^{99m}Rh	—	2E3	9E-7	3E-9	—	—
		Y, see ^{99m}Rh	—	2E3	8E-7	3E-9	—	—
45	Rhodium-100	D, see ^{99m}Rh	2E3	5E3	2E-6	7E-9	2E-5	2E-4
		W, see ^{99m}Rh	—	4E3	2E-6	6E-9	—	—
		Y, see ^{99m}Rh	—	4E3	2E-6	5E-9	—	—
45	Rhodium-101m	D, see ^{99m}Rh	6E3	1E4	5E-6	2E-8	8E-5	8E-4
		W, see ^{99m}Rh	—	8E3	4E-6	1E-8	—	—
		Y, see ^{99m}Rh	—	8E3	3E-6	1E-8	—	—
45	Rhodium-101	D, see	2E3	5E2	2E-7	7E-10	3E-5	3E-4

		^{99m}Rh						
		W, see ^{99m}Rh	—	8E2	3E-7	1E-9	—	—
		Y, see ^{99m}Rh	—	2E2	6E-8	2E-10	—	—
45	Rhodium-102m	D, see ^{99m}Rh	1E3	5E2	2E-7	7E-10	—	—
			LLI wall (1E3)	—	—	—	2E-5	2E-4
		W, see ^{99m}Rh	—	4E2	2E-7	5E-10	—	—
		Y, see ^{99m}Rh	—	1E2	5E-8	2E-10	—	—
45	Rhodium-102	D, see ^{99m}Rh	6E2	9E1	4E-8	1E-10	8E-6	8E-5
		W, see ^{99m}Rh	—	2E2	7E-8	2E-10	—	—
		Y, see ^{99m}Rh	—	6E1	2E-8	8E-11	—	—
45	Rhodium-103m[2]	D, see ^{99m}Rh	4E5	1E6	5E-4	2E-6	6E-3	6E-2
		W, see ^{99m}Rh	—	1E6	5E-4	2E-6	—	—
		Y, see ^{99m}Rh	—	1E6	5E-4	2E-6	—	—
45	Rhodium-105	D, see ^{99m}Rh	4E3	1E4	5E-6	2E-8	—	—
			LLI wall (4E3)	—	—	—	5E-5	5E-4
		W, see ^{99m}Rh	—	6E3	3E-6	9E-9	—	—
		Y, see ^{99m}Rh	—	6E3	2E-6	8E-9	—	—
45	Rhodium-106m	D, see ^{99m}Rh	8E3	3E4	1E-5	4E-8	1E-4	1E-3
		W, see ^{99m}Rh	—	4E4	2E-5	5E-8	—	—
		Y, see ^{99m}Rh	—	4E4	1E-5	5E-8	—	—
45	Rhodium-107[2]	D, see ^{99m}Rh	7E4	2E5	1E-4	3E-7	—	—
			St wall (9E4)	—	—	—	1E-3	1E-2
		W, see ^{99m}Rh	—	3E5	1E-4	4E-7	—	—

		Y, see ^{99m}Rh	—	3E5	1E-4	3E-7	—	—
46	Palladium-100	D, all compounds except those given for W and Y	1E3	1E3	6E-7	2E-9	2E-5	2E-4
		W, nitrates	—	1E3	5E-7	2E-9	—	—
		Y, oxides and hydroxides	—	1E3	6E-7	2E-9	—	—
46	Palladium-101	D, see ^{100}Pd	1E4	3E4	1E-5	5E-8	2E-4	2E-3
		W, see ^{100}Pd	—	3E4	1E-5	5E-8	—	—
		Y, see ^{100}Pd	—	3E4	1E-5	4E-8	—	—
46	Palladium-103	D, see ^{100}Pd	6E3	6E3	3E-6	9E-9	—	—
			LLI wall (7E3)	—	—	—	1E-4	1E-3
		W, see ^{100}Pd	—	4E3	2E-6	6E-9	—	—
		Y, see ^{100}Pd	—	4E3	1E-6	5E-9	—	—
46	Palladium-107	D, see ^{100}Pd	3E4	2E4	9E-6	—	—	—
			LLI wall (4E4)	Kidneys (2E4)	—	3E-8	5E-4	5E-3
		W, see ^{100}Pd	—	7E3	3E-6	1E-8	—	—
		Y, see ^{100}Pd	—	4E2	2E-7	6E-10	—	—
46	Palladium-109	D, see ^{100}Pd	2E3	6E3	3E-6	9E-9	3E-5	3E-4
		W, see ^{100}Pd	—	5E3	2E-6	8E-9	—	—
		Y, see ^{100}Pd	—	5E3	2E-6	6E-9	—	—
47	Silver-102[2]	D, all compounds						
		except those	5E4	2E5	8E-5	2E-7	—	—

		given for W	St wall					
		and Y	(6E4)	—	—	—	9E-4	9E-3
		W, nitrates and sulfides	—	2E5	9E-5	3E-7	—	—
		Y, oxides and hydroxides	—	2E5	8E-5	3E-7	—	—
47	Silver-103[2]	D, see ^{102}Ag	4E4	1E5	4E-5	1E-7	5E-4	5E-3
		W, see ^{102}Ag	—	1E5	5E-5	2E-7	—	—
		Y, see ^{102}Ag	—	1E5	5E-5	2E-7	—	—
47	Silver-104m[2]	D, see ^{102}Ag	3E4	9E4	4E-5	1E-7	4E-4	4E-3
		W, see ^{102}Ag	—	1E5	5E-5	2E-7	—	—
		Y, see ^{102}Ag	—	1E5	5E-5	2E-7	—	—
47	Silver-104[2]	D, see ^{102}Ag	2E4	7E4	3E-5	1E-7	3E-4	3E-3
		W, see ^{102}Ag	—	1E5	6E-5	2E-7	—	—
		Y, see ^{102}Ag	—	1E5	6E-5	2E-7	—	—
47	Silver-105	D, see ^{102}Ag	3E3	1E3	4E-7	1E-9	4E-5	4E-4
		W, see ^{102}Ag	—	2E3	7E-7	2E-9	—	—
		Y, see ^{102}Ag	—	2E3	7E-7	2E-9	—	—
47	Silver-106m	D, see ^{102}Ag	8E2	7E2	3E-7	1E-9	1E-5	1E-4
		W, see ^{102}Ag	—	9E2	4E-7	1E-9	—	—
		Y, see ^{102}Ag	—	9E2	4E-7	1E-9	—	—
47	Silver-106[2]	D, see ^{102}Ag	6E4	2E5	8E-5	3E-7	—	—
			St wall (6E4)	—	—	—	9E-4	9E-3
		W, see ^{102}Ag	—	2E5	9E-5	3E-7	—	—

		Y, see ^{102}Ag	—	2E5	8E-5	3E-7	—	—
47	Silver-108m	D, see ^{102}Ag	6E2	2E2	8E-8	3E-10	9E-6	9E-5
		W, see ^{102}Ag	—	3E2	1E-7	4E-10	—	—
		Y, see ^{102}Ag	—	2E1	1E-8	3E-11	—	—
47	Silver-110m	D, see ^{102}Ag	5E2	1E2	5E-8	2E-10	6E-6	6E-5
		W, see ^{102}Ag	—	2E2	8E-8	3E-10	—	—
		Y, see ^{102}Ag	—	9E1	4E-8	1E-10	—	—
47	Silver-111	D, see ^{102}Ag	9E2	2E3	6E-7	—	—	—
			LLI wall (1E3)	Liver (2E3)	—	2E-9	2E-5	2E-4
		W, see ^{102}Ag	—	9E2	4E-7	1E-9	—	—
		Y, see ^{102}Ag	—	9E2	4E-7	1E-9	—	—
47	Silver-112	D, see ^{102}Ag	3E3	8E3	3E-6	1E-8	4E-5	4E-4
		W, see ^{102}Ag	—	1E4	4E-6	1E-8	—	—
		Y, see ^{102}Ag	—	9E3	4E-6	1E-8	—	—
47	Silver-115[2]	D, see ^{102}Ag	3E4	9E4	4E-5	1E-7	—	—
			St wall (3E4)	—	—	—	4E-4	4E-3
		W, see ^{102}Ag	—	9E4	4E-5	1E-7	—	—
		Y, see ^{102}Ag	—	8E4	3E-5	1E-7	—	—
48	Cadmium-104[2]	D, all compounds except those given for W and Y	2E4	7E4	3E-5	9E-8	3E-4	3E-3
		W, sulfides, halides, and nitrates	—	1E5	5E-5	2E-7	—	—

		Y, oxides and hydroxides	—	1E5	5E-5	2E-7	—	—
48	Cadmium-107	D, see ^{104}Cd	2E4	5E4	2E-5	8E-8	3E-4	3E-3
		W, see ^{104}Cd	—	6E4	2E-5	8E-8	—	—
		Y, see ^{104}Cd	—	5E4	2E-5	7E-8	—	—
48	Cadmium-109	D, see ^{104}Cd	3E2 Kidneys (4E2)	4E1 Kidneys (5E1)	1E-8 —	— 7E-11	— 6E-6	— 6E-5
		W, see ^{104}Cd	— —	1E2 Kidneys (1E2)	5E-8 —	— 2E-10	— —	— —
		Y, see ^{104}Cd	—	1E2	5E-8	2E-10	—	—
48	Cadmium-113m	D, see ^{104}Cd	2E1 Kidneys (4E1)	2E0 Kidneys (4E0)	1E-9 —	— 5E-12	— 5E-7	— 5E-6
		W, see ^{104}Cd	— —	8E0 Kidneys (1E1)	4E-9 —	— 2E-11	— —	— —
		Y, see ^{104}Cd	—	1E1	5E-9	2E-11	—	—
48	Cadmium-113	D, see ^{104}Cd	2E1 Kidneys (3E1)	2E0 Kidneys (3E0)	9E-10 —	— 5E-12	— 4E-7	— 4E-6
		W, see ^{104}Cd	— —	8E0 Kidneys (1E1)	3E-9 —	— 2E-11	— —	— —
		Y, see ^{104}Cd	—	1E1	6E-9	2E-11	—	—
48	Cadmium-115m	D, see ^{104}Cd	3E2 —	5E1 Kidneys (8E1)	2E-8 —	— 1E-10	4E-6 —	4E-5 —
		W, see ^{104}Cd	—	1E2	5E-8	2E-10	—	—

		Y, see ^{104}Cd	—	1E2	6E-8	2E-10	—	—
48	Cadmium-117m	D, see ^{104}Cd	5E3	1E4	5E-6	2E-8	6E-5	6E-4
		W, see ^{104}Cd	—	2E4	7E-6	2E-8	—	—
		Y, see ^{104}Cd	—	1E4	6E-6	2E-8	—	—
48	Cadmium-117	D, see ^{104}Cd	5E3	1E4	5E-6	2E-8	6E-5	6E-4
		W, see ^{104}Cd	—	2E4	7E-6	2E-8	—	—
		Y, see ^{104}Cd	—	1E4	6E-6	2E-8	—	—
49	Indium-109	D, all compounds except those given for W	2E4	4E4	2E-5	6E-8	3E-4	3E-3
		W, oxides, hydroxides, halides, and nitrates	—	6E4	3E-5	9E-8	—	—
49	Indium-110[2] (69.1 min)	D, see ^{109}In	2E4	4E4	2E-5	6E-8	2E-4	2E-3
		W, see ^{109}In	—	6E4	2E-5	8E-8	—	—
49	Indium-110 (4.9 h)	D, see ^{109}In	5E3	2E4	7E-6	2E-8	7E-5	7E-4
		W, see ^{109}In	—	2E4	8E-6	3E-8	—	—
49	Indium-111	D, see ^{109}In	4E3	6E3	3E-6	9E-9	6E-5	6E-4
		W, see ^{109}In	—	6E3	3E-6	9E-9	—	—
49	Indium-112	D, see ^{109}In	2E5	6E5	3E-4	9E-7	2E-3	2E-2
		W, see ^{109}In	—	7E5	3E-4	1E-6	—	—
49	Indium-113m[2]	D, see ^{109}In	5E4	1E5	6E-5	2E-7	7E-4	7E-3
		W, see ^{109}In	—	2E5	8E-5	3E-7	—	—
49	Indium-114m	D, see ^{109}In	3E2	6E1	3E-8	9E-11	—	—
			LLI wall	—	—	—	5E-6	5E-5

			(4E2)					
		W, see ^{109}In	—	1E2	4E-8	1E-10	—	—
49	Indium-115m	D, see ^{109}In	1E4	4E4	2E-5	6E-8	2E-4	2E-3
		W, see ^{109}In	—	5E4	2E-5	7E-8	—	—
49	Indium-115	D, see ^{109}In	4E1	1E0	6E-10	2E-12	5E-7	5E-6
		W, see ^{109}In	—	5E0	2E-9	8E-12	—	—
49	Indium-116m[2]	D, see ^{109}In	2E4	8E4	3E-5	1E-7	3E-4	3E-3
		W, see ^{109}In	—	1E5	5E-5	2E-7	—	—
49	Indium-117m[2]	D, see ^{109}In	1E4	3E4	1E-5	5E-8	2E-4	2E-3
		W, see ^{109}In	—	4E4	2E-5	6E-8	—	—
49	Indium-117[2]	D, see ^{109}In	6E4	2E5	7E-5	2E-7	8E-4	8E-3
		W, see ^{109}In	—	2E5	9E-5	3E-7	—	—
49	Indium-119m[2]	D, see ^{109}In	4E4	1E5	5E-5	2E-7	—	—
			St wall (5E4)	—	—	—	7E-4	7E-3
		W, see ^{109}In	—	1E5	6E-5	2E-7	—	—
50	Tin-110	D, all compounds except those given for W	4E3	1E4	5E-6	2E-8	5E-5	5E-4
		W, sulfides, oxides, hydroxides, halides, nitrates, and stannic phosphate	—	1E4	5E-6	2E-8	—	—
50	Tin-111[2]	D, see ^{110}Sn	7E4	2E5	9E-5	3E-7	1E-3	—
		W, see ^{110}Sn	—	3E5	1E-4	4E-7	—	—
50	Tin-113	D, see ^{110}Sn	2E3 LLI	1E3	5E-7	2E-9	—	—

			wall (2E3)	—	—	—	3E-5	3E-4
		W, see ^{110}Sn	—	5E2	2E-7	8E-10	—	—
50	Tin-117m	D, see ^{110}Sn	2E3 LLI	1E3 Bone	5E-7	—	—	—
			wall (2E3)	surf (2E3)	—	3E-9	3E-5	3E-4
		W, see ^{110}Sn	—	1E3	6E-7	2E-9	—	—
50	Tin-119m	D, see ^{110}Sn	3E3 LLI	2E3	1E-6	3E-9	—	—
			wall (4E3)	—	—	—	6E-5	6E-4
		W, see ^{110}Sn	—	1E3	4E-7	1E-9	—	—
50	Tin-121m	D, see ^{110}Sn	3E3 LLI	9E2	4E-7	1E-9	—	—
			wall (4E3)	—	—	—	5E-5	5E-4
		W, see ^{110}Sn	—	5E2	2E-7	8E-10	—	—
50	Tin-121	D, see ^{110}Sn	6E3 LLI	2E4	6E-6	2E-8	—	—
			wall (6E3)	—	—	—	8E-5	8E-4
		W, see ^{110}Sn	—	1E4	5E-6	2E-8	—	—
50	Tin-123m[2]	D, see ^{110}Sn	5E4	1E5	5E-5	2E-7	7E-4	7E-3
		W, see ^{110}Sn	—	1E5	6E-5	2E-7	—	—
50	Tin-123	D, see ^{110}Sn	5E2 LLI	6E2	3E-7	9E-10	—	—
			wall (6E2)	—	—	—	9E-6	9E-5
		W, see ^{110}Sn	—	2E2	7E-8	2E-10	—	—
50	Tin-125	D, see ^{110}Sn	4E2 LLI	9E2	4E-7	1E-9	—	—
			wall (5E2)	—	—	—	6E-6	6E-5
		W, see ^{110}Sn	—	4E2	1E-7	5E-10	—	—
50	Tin-126	D, see	3E2	6E1	2E-8	8E-11	4E-6	4E-5

		^{110}Sn						
		W, see ^{110}Sn	—	7E1	3E-8	9E-11	—	—
50	Tin-127	D, see ^{110}Sn	7E3	2E4	8E-6	3E-8	9E-5	9E-4
		W, see ^{110}Sn	—	2E4	8E-6	3E-8	—	—
50	Tin-128[2]	D, see ^{110}Sn	9E3	3E4	1E-5	4E-8	1E-4	1E-3
		W, see ^{110}Sn	—	4E4	1E-5	5E-8	—	—
51	Antimony-115[2]	D, all compounds except those given for W	8E4	2E5	1E-4	3E-7	1E-3	1E-2
		W, oxides, hydroxides, halides, sulfides, sulfates, and nitrates	—	3E5	1E-4	4E-7	—	—
51	Antimony-116m[2]	D, see ^{115}Sb	2E4	7E4	3E-5	1E-7	3E-4	3E-3
		W, see ^{115}Sb	—	1E5	6E-5	2E-7	—	—
51	Antimony-116[2]	D, see ^{115}Sb	7E4	3E5	1E-4	4E-7	—	—
			St wall (9E4)	—	—	—	1E-3	1E-2
		W, see ^{115}Sb	—	3E5	1E-4	5E-7	—	—
51	Antimony-117	D, see ^{115}Sb	7E4	2E5	9E-5	3E-7	9E-4	9E-3
		W, see ^{115}Sb	—	3E5	1E-4	4E-7	—	—
51	Antimony-118m	D, see ^{115}Sb	6E3	2E4	8E-6	3E-8	7E-5	7E-4
		W, see ^{115}Sb	5E3	2E4	9E-6	3E-8	—	—
51	Antimony-119	D, see ^{115}Sb	2E4	5E4	2E-5	6E-8	2E-4	2E-3
		W, see ^{115}Sb	2E4	3E4	1E-5	4E-8	—	—
51	Antimony-	D, see	1E5	4E5	2E-4	6E-7	—	—

	120^2 (16 min)	^{115}Sb	St wall (2E5)	—	—	—	2E-3	2E-2
		W, see ^{115}Sb	—	5E5	2E-4	7E-7	—	—
51	Antimony-120 (5.76 d)	D, see ^{115}Sb	1E3	2E3	9E-7	3E-9	1E-5	1E-4
		W, see ^{115}Sb	9E2	1E3	5E-7	2E-9	—	—
51	Antimony-122	D, see ^{115}Sb	8E2	2E3	1E-6	3E-9	—	—
			LLI wall (8E2)	—	—	—	1E-5	1E-4
		W, see ^{115}Sb	7E2	1E3	4E-7	2E-9	—	—
51	Antimony-$124m^2$	D, see ^{115}Sb	3E5	8E5	4E-4	1E-6	3E-3	3E-2
		W, see ^{115}Sb	2E5	6E5	2E-4	8E-7	—	—
51	Antimony-124	D, see ^{115}Sb	6E2	9E2	4E-7	1E-9	7E-6	7E-5
		W, see ^{115}Sb	5E2	2E2	1E-7	3E-10	—	—
51	Antimony-125	D, see ^{115}Sb	2E3	2E3	1E-6	3E-9	3E-5	3E-4
		W, see ^{115}Sb	—	5E2	2E-7	7E-10	—	—
51	Antimony-$126m^2$	D, see ^{115}Sb	5E4	2E5	8E-5	3E-7	—	—
			St wall (7E4)	—	—	—	9E-4	9E-3
		W, see ^{115}Sb	—	2E5	8E-5	3E-7	—	—
51	Antimony-126	D, see ^{115}Sb	6E2	1E3	5E-7	2E-9	7E-6	7E-5
		W, see ^{115}Sb	5E2	5E2	2E-7	7E-10	—	—
51	Antimony-127	D, see ^{115}Sb	8E2	2E3	9E-7	3E-9	—	—
			LLI wall (8E2)	—	—	—	1E-5	1E-4
		W, see ^{115}Sb	7E2	9E2	4E-7	1E-9	—	—
51	Antimony-128^2 (10.4 min)	D, see ^{115}Sb	8E4	4E5	2E-4	5E-7	—	—
			St wall (1E5)	—	—	—	1E-3	1E-2

		W, see ^{115}Sb	—	4E5	2E-4	6E-7	—	—
51	Antimony-128 (9.01 h)	D, see ^{115}Sb	1E3	4E3	2E-6	6E-9	2E-5	2E-4
		W, see ^{115}Sb	—	3E3	1E-6	5E-9	—	—
51	Antimony-129	D, see ^{115}Sb	3E3	9E3	4E-6	1E-8	4E-5	4E-4
		W, see ^{115}Sb	—	9E3	4E-6	1E-8	—	—
51	Antimony-130[2]	D, see ^{115}Sb	2E4	6E4	3E-5	9E-8	3E-4	3E-3
		W, see ^{115}Sb	—	8E4	3E-5	1E-7	—	—
51	Antimony-131[2]	D, see ^{115}Sb	1E4 Thyroid (2E4)	2E4 Thyroid (4E4)	1E-5	—	—	—
					—	6E-8	2E-4	2E-3
		W, see ^{115}Sb	—	2E4	1E-5	—	—	—
				Thyroid				
			—	(4E4)	—	6E-8	—	—
52	Tellurium-116	D, all compounds except those given for W	8E3	2E4	9E-6	3E-8	1E-4	1E-3
		W, oxides, hydroxides, and nitrates	—	3E4	1E-5	4E-8	—	—
52	Tellurium-121m	D, see ^{116}Te	5E2 Bone surf (7E2)	2E2 Bone surf (4E2)	8E-8	—	—	—
					—	5E-10	1E-5	1E-4
		W, see ^{116}Te	—	4E2	2E-7	6E-10	—	—
52	Tellurium-121	D, see ^{116}Te	3E3	4E3	2E-6	6E-9	4E-5	4E-4
		W, see ^{116}Te	—	3E3	1E-6	4E-9	—	—
52	Tellurium-123m	D, see ^{116}Te	6E2 Bone surf	2E2 Bone surf	9E-8	—	—	—
					—	8E-10	1E-5	1E-4

			(1E3)	(5E2)				
		W, see ^{116}Te	—	5E2	2E-7	8E-10	—	—
52	Tellurium-123	D, see ^{116}Te	5E2	2E2	8E-8	—	—	—
			Bone surf (1E3)	Bone surf (5E2)	—	7E-10	2E-5	2E-4
		W, see ^{116}Te	—	4E2	2E-7	—	—	—
			—	Bone surf (1E3)	—	2E-9	—	—
52	Tellurium-125m	D, see ^{116}Te	1E3	4E2	2E-7	—	—	—
			Bone surf (1E3)	Bone surf (1E3)	—	1E-9	2E-5	2E-4
		W, see ^{116}Te	—	7E2	3E-7	1E-9	—	—
52	Tellurium-127m	D, see ^{116}Te	6E2	3E2	1E-7	—	9E-6	9E-5
			—	Bone surf (4E2)	—	6E-10	—	—
		W, see ^{116}Te	—	3E2	1E-7	4E-10	—	—
52	Tellurium-127	D, see ^{116}Te	7E3	2E4	9E-6	3E-8	1E-4	1E-3
		W, see ^{116}Te	—	2E4	7E-6	2E-8	—	—
52	Tellurium-129m	D, see ^{116}Te	5E2	6E2	3E-7	9E-10	7E-6	7E-5
		W, see ^{116}Te	—	2E2	1E-7	3E-10	—	—
52	Tellurium-129[2]	D, see ^{116}Te	3E4	6E4	3E-5	9E-8	4E-4	4E-3
		W, see ^{116}Te	—	7E4	3E-5	1E-7	—	—
52	Tellurium-131m	D, see ^{116}Te	3E2	4E2	2E-7	—	—	—
			Thyroid (6E2)	Thyroid (1E3)	—	2E-9	8E-6	8E-5
		W, see ^{116}Te	—	4E2	2E-7	—	—	—
				Thyroid				

			—	(9E2)	—	1E-9	—	—
52	Tellurium-131[2]	D, see ^{116}Te	3E3	5E3	2E-6	—	—	—
			Thyroid (6E3)	Thyroid (1E4)	—	2E-8	8E-5	8E-4
		W, see ^{116}Te	—	5E3	2E-6	—	—	—
			—	Thyroid (1E4)	—	2E-8	—	—
52	Tellurium-132	D, see ^{116}Te	2E2	2E2	9E-8	—	—	—
			Thyroid (7E2)	Thyroid (8E2)	—	1E-9	9E-6	9E-5
		W, see ^{116}Te	—	2E2	9E-8	—	—	—
			—	Thyroid (6E2)	—	9E-10	—	—
52	Tellurium-133m[2]	D, see ^{116}Te	3E3	5E3	2E-6	—	—	—
			Thyroid (6E3)	Thyroid (1E4)	—	2E-8	9E-5	9E-4
		W, see ^{116}Te	—	5E3	2E-6	—	—	—
			—	Thyroid (1E4)	—	2E-8	—	—
52	Tellurium-133[2]	D, see ^{116}Te	1E4	2E4	9E-6	—	—	—
			Thyroid (3E4)	Thyroid (6E4)	—	8E-8	4E-4	4E-3
		W, see ^{116}Te	—	2E4	9E-6	—	—	—
			—	Thyroid (6E4)	—	8E-8	—	—
52	Tellurium-134[2]	D, see ^{116}Te	2E4	2E4	1E-5	—	—	—
			Thyroid (2E4)	Thyroid (5E4)	—	7E-8	3E-4	3E-3
		W, see ^{116}Te	—	2E4	1E-5	—	—	—
				Thyroi				

				d				
			—	(5E4)	—	7E-8	—	—
53	Iodine-120m[2]	D, all compounds	1E4	2E4	9E-6	3E-8	—	—
			Thyroid (1E4)	—	—	—	2E-4	2E-3
53	Iodine-120[2]	D, all compounds	4E3	9E3	4E-6	—	—	—
			Thyroid (8E3)	Thyroid (1E4)	—	2E-8	1E-4	1E-3
53	Iodine-121	D, all compounds	1E4	2E4	8E-6	—	—	—
			Thyroid (3E4)	Thyroid (5E4)	—	7E-8	4E-4	4E-3
53	Iodine-123	D, all compounds	3E3	6E3	3E-6	—	—	—
			Thyroid (1E4)	Thyroid (2E4)	—	2E-8	1E-4	1E-3
53	Iodine-124	D, all compounds	5E1	8E1	3E-8	—	—	—
			Thyroid (2E2)	Thyroid (3E2)	—	4E-10	2E-6	2E-5
53	Iodine-125	D, all compounds	4E1	6E1	3E-8	—	—	—
			Thyroid (1E2)	Thyroid (2E2)	—	3E-10	2E-6	2E-5
53	Iodine-126	D, all compounds	2E1	4E1	1E-8	—	—	—
			Thyroid (7E1)	Thyroid (1E2)	—	2E-10	1E-6	1E-5
53	Iodine-128[2]	D, all compounds	4E4	1E5	5E-5	2E-7	—	—
			St wall (6E4)	—	—	—	8E-4	8E-3
53	Iodine-129	D, all compounds	5E0	9E0	4E-9	—	—	—
			Thyroid (2E1)	Thyroid (3E1)	—	4E-11	2E-7	2E-6
53	Iodine-130	D, all compounds	4E2	7E2	3E-7	—	—	—
			Thyroid (1E3)	Thyroid (2E3)	—	3E-9	2E-5	2E-4
53	Iodine-131	D, all compounds	3E1	5E1	2E-8	—	—	—
			Thyroid (9E1)	Thyroid (2E2)	—	2E-10	1E-6	1E-5

53	Iodine-132m[2]	D, all compounds	4E3 Thyroid (1E4)	8E3 Thyroid (2E4)	4E-6	—	—	—
					—	3E-8	1E-4	1E-3
53	Iodine-132	D, all compounds	4E3 Thyroid (9E3)	8E3 Thyroid (1E4)	3E-6	—	—	—
					—	2E-8	1E-4	1E-3
53	Iodine-133	D, all compounds	1E2 Thyroid (5E2)	3E2 Thyroid (9E2)	1E-7	—	—	—
					—	1E-9	7E-6	7E-5
53	Iodine-134[2]	D, all compounds	2E4 Thyroid (3E4)	5E4	2E-5	6E-8	—	—
				—	—	—	4E-4	4E-3
53	Iodine-135	D, all compounds	8E2 Thyroid (3E3)	2E3 Thyroid (4E3)	7E-7	—	—	—
					—	6E-9	3E-5	3E-4
54	Xenon-120[2]	Submersion[1]	—	—	1E-5	4E-8	—	—
54	Xenon-121[2]	Submersion[1]	—	—	2E-6	1E-8	—	—
54	Xenon-122	Submersion[1]	—	—	7E-5	3E-7	—	—
54	Xenon-123	Submersion[1]	—	—	6E-6	3E-8	—	—
54	Xenon-125	Submersion[1]	—	—	2E-5	7E-8	—	—
54	Xenon-127	Submersion[1]	—	—	1E-5	6E-8	—	—
54	Xenon-129m	Submersion[1]	—	—	2E-4	9E-7	—	—
54	Xenon-131m	Submersion[1]	—	—	4E-4	2E-6	—	—
54	Xenon-133m	Submersion[1]	—	—	1E-4	6E-7	—	—
54	Xenon-133	Submersion[1]	—	—	1E-4	5E-7	—	—
54	Xenon-135m[2]	Submersion[1]	—	—	9E-6	4E-8	—	—
54	Xenon-135	Submersion[1]	—	—	1E-5	7E-8	—	—
54	Xenon-138[2]	Submersio	—	—	4E-6	2E-8	—	—

		n[1]						
55	Cesium-125[2]	D, all compounds	5E4	1E5	6E-5	2E-7	—	—
			St wall (9E4)	—	—	—	1E-3	1E-2
55	Cesium-127	D, all compounds	6E4	9E4	4E-5	1E-7	9E-4	9E-3
55	Cesium-129	D, all compounds	2E4	3E4	1E-5	5E-8	3E-4	3E-3
55	Cesium-130[2]	D, all compounds	6E4	2E5	8E-5	3E-7	—	—
			St wall (1E5)	—	—	—	1E-3	1E-2
55	Cesium-131	D, all compounds	2E4	3E4	1E-5	4E-8	3E-4	3E-3
55	Cesium-132	D, all compounds	3E3	4E3	2E-6	6E-9	4E-5	4E-4
55	Cesium-134m	D, all compounds	1E5	1E5	6E-5	2E-7	—	—
			St wall (1E5)	—	—	—	2E-3	2E-2
55	Cesium-134	D, all compounds	7E1	1E2	4E-8	2E-10	9E-7	9E-6
55	Cesium-135m[2]	D, all compounds	1E5	2E5	8E-5	3E-7	1E-3	1E-2
55	Cesium-135	D, all compounds	7E2	1E3	5E-7	2E-9	1E-5	1E-4
55	Cesium-136	D, all compounds	4E2	7E2	3E-7	9E-10	6E-6	6E-5
55	Cesium-137	D, all compounds	1E2	2E2	6E-8	2E-10	1E-6	1E-5
55	Cesium-138[2]	D, all compounds	2E4	6E4	2E-5	8E-8	—	—
			St wall (3E4)	—	—	—	4E-4	4E-3
56	Barium-126[2]	D, all compounds	6E3	2E4	6E-6	2E-8	8E-5	8E-4
56	Barium-128	D, all compounds	5E2	2E3	7E-7	2E-9	7E-6	7E-5
56	Barium-131m[2]	D, all compounds	4E5	1E6	6E-4	2E-6	—	—
			St wall (5E5)	—	—	—	7E-3	7E-2
56	Barium-131	D, all compounds	3E3	8E3	3E-6	1E-8	4E-5	4E-4
56	Barium-133m	D, all compounds	2E3	9E3	4E-6	1E-8	—	—
			LLI wall (3E3)	—	—	—	4E-5	4E-4

56	Barium-133	D, all compounds	2E3	7E2	3E-7	9E-10	2E-5	2E-4
56	Barium-135m	D, all compounds	3E3	1E4	5E-6	2E-8	4E-5	4E-4
56	Barium-139[2]	D, all compounds	1E4	3E4	1E-5	4E-8	2E-4	2E-3
56	Barium-140	D, all compounds	5E2	1E3	6E-7	2E-9	—	—
			LLI wall (6E2)	—	—	—	8E-6	8E-5
56	Barium-141[2]	D, all compounds	2E4	7E4	3E-5	1E-7	3E-4	3E-3
56	Barium-142[2]	D, all compounds	5E4	1E5	6E-5	2E-7	7E-4	7E-3
57	Lanthanum-131[2]	D, all compounds except those given for W	5E4	1E5	5E-5	2E-7	6E-4	6E-3
		W, oxides and hydroxides	—	2E5	7E-5	2E-7	—	—
57	Lanthanum-132	D, see ^{131}La	3E3	1E4	4E-6	1E-8	4E-5	4E-4
		W, see ^{131}La	—	1E4	5E-6	2E-8	—	—
57	Lanthanum-135	D, see ^{131}La	4E4	1E5	4E-5	1E-7	5E-4	5E-3
		W, see ^{131}La	—	9E4	4E-5	1E-7	—	—
57	Lanthanum-137	D, see ^{131}La	1E4	6E1	3E-8	—	2E-4	2E-3
			—	Liver (7E1)	—	1E-10	—	—
		W, see ^{131}La	—	3E2	1E-7	—	—	—
			—	Liver (3E2)	—	4E-10	—	—
57	Lanthanum-138	D, see ^{131}La	9E2	4E0	1E-9	5E-12	1E-5	1E-4
		W, see ^{131}La	—	1E1	6E-9	2E-11	—	—
57	Lanthanum-140	D, see ^{131}La	6E2	1E3	6E-7	2E-9	9E-6	9E-5
		W, see	—	1E3	5E-7	2E-9	—	—

		^{131}La						
57	Lanthanum-141	D, see ^{131}La	4E3	9E3	4E-6	1E-8	5E-5	5E-4
		W, see ^{131}La	—	1E4	5E-6	2E-8	—	—
57	Lanthanum-142[2]	D, see ^{131}La	8E3	2E4	9E-6	3E-8	1E-4	1E-3
		W, see ^{131}La	—	3E4	1E-5	5E-8	—	—
57	Lanthanum-143[2]	D, see ^{131}La	4E4	1E5	4E-5	1E-7	—	—
			St wall (4E4)	—	—	—	5E-4	5E-3
		W, see ^{131}La	—	9E4	4E-5	1E-7	—	—
58	Cerium-134	W, all compounds	5E2	7E2	3E-7	1E-9	—	—
		except those	LLI wall					
		given for Y	(6E2)	—	—	—	8E-6	8E-5
		Y, oxides, hydroxides, and fluorides	—	7E2	3E-7	9E-10	—	—
58	Cerium-135	W, see ^{134}Ce	2E3	4E3	2E-6	5E-9	2E-5	2E-4
		Y, see ^{134}Ce	—	4E3	1E-6	5E-9	—	—
58	Cerium-137m	W, see ^{134}Ce	2E3	4E3	2E-6	6E-9	—	—
			LLI wall (2E3)	—	—	—	3E-5	3E-4
		Y, see ^{134}Ce	—	4E3	2E-6	5E-9	—	—
58	Cerium-137	W, see ^{134}Ce	5E4	1E5	6E-5	2E-7	7E-4	7E-3
		Y, see ^{134}Ce	—	1E5	5E-5	2E-7	—	—
58	Cerium-139	W, see ^{134}Ce	5E3	8E2	3E-7	1E-9	7E-5	7E-4
		Y, see ^{134}Ce	—	7E2	3E-7	9E-10	—	—
58	Cerium-141	W, see ^{134}Ce	2E3	7E2	3E-7	1E-9	—	—
			LLI wall	—	—	—	3E-5	3E-4

			(2E3)					
		Y, see ^{134}Ce	—	6E2	2E-7	8E-10	—	—
58	Cerium-143	W, see ^{134}Ce	1E3	2E3	—	3E-9	—	—
			LLI wall (1E3)	—	8E-7	—	2E-5	2E-4
		Y, see ^{134}Ce	—	2E3	7E-7	2E-9	—	—
58	Cerium-144	W, see ^{134}Ce	2E2	3E1	1E-8	4E-11	—	—
			LLI wall (3E2)	—	—	—	3E-6	3E-5
		Y, see ^{134}Ce	—	1E1	6E-9	2E-11	—	—
59	Praseodymium-136[2]	W, all compounds except those given for Y	5E4	2E5	1E-4	3E-7	—	—
			St wall (7E4)	—	—	—	1E-3	1E-2
		Y, oxides, hydroxides, carbides, and fluorides	—	2E5	9E-5	3E-7	—	—
59	Praseodymium-137[2]	W, see ^{136}Pr	4E4	2E5	6E-5	2E-7	5E-4	5E-3
		Y, see ^{136}Pr	—	1E5	6E-5	2E-7	—	—
59	Praseodymium-138m	W, see ^{136}Pr	1E4	5E4	2E-5	8E-8	1E-4	1E-3
		Y, see ^{136}Pr	—	4E4	2E-5	6E-8	—	—
59	Praseodymium-139	W, see ^{136}Pr	4E4	1E5	5E-5	2E-7	6E-4	6E-3
		Y, see ^{136}Pr	—	1E5	5E-5	2E-7	—	—
59	Praseodymium-142m[2]	W, see ^{136}Pr	8E4	2E5	7E-5	2E-7	1E-3	1E-2
		Y, see ^{136}Pr	—	1E5	6E-5	2E-7	—	—
59	Praseodymium-142	W, see ^{136}Pr	1E3	2E3	9E-7	3E-9	1E-5	1E-4
		Y, see ^{136}Pr	—	2E3	8E-7	3E-9	—	—
59	Praseodymium-143	W, see ^{136}Pr	9E2	8E2	3E-7	1E-9	—	—
			LLI wall (1E3)	—	—	—	2E-5	2E-4

		Y, see ^{136}Pr	—	7E2	3E-7	9E-10	—	—
59	Praseodymium-144[2]	W, see ^{136}Pr	3E4	1E5	5E-5	2E-7	—	—
			St wall (4E4)	—	—	—	6E-4	6E-3
		Y, see ^{136}Pr	—	1E5	5E-5	2E-7	—	—
59	Praseodymium-145	W, see ^{136}Pr	3E3	9E3	4E-6	1E-8	4E-5	4E-4
		Y, see ^{136}Pr	—	8E3	3E-6	1E-8	—	—
59	Praseodymium-147[2]	W, see ^{136}Pr	5E4	2E5	8E-5	3E-7	—	—
			St wall (8E4)	—	—	—	1E-3	1E-2
		Y, see ^{136}Pr	—	2E5	8E-5	3E-7	—	—
60	Neodymium-136[2]	W, all compounds except those given for Y	1E4	6E4	2E-5	8E-8	2E-4	2E-3
		Y, oxides, hydroxides, carbides, and fluorides	—	5E4	2E-5	8E-8	—	—
60	Neodymium-138	W, see ^{136}Nd	2E3	6E3	3E-6	9E-9	3E-5	3E-4
		Y, see ^{136}Nd	—	5E3	2E-6	7E-9	—	—
60	Neodymium-139m	W, see ^{136}Nd	5E3	2E4	7E-6	2E-8	7E-5	7E-4
		Y, see ^{136}Nd	—	1E4	6E-6	2E-8	—	—
60	Neodymium-139[2]	W, see ^{136}Nd	9E4	3E5	1E-4	5E-7	1E-3	1E-2
		Y, see ^{136}Nd	—	3E5	1E-4	4E-7	—	—
60	Neodymium-141	W, see ^{136}Nd	2E5	7E5	3E-4	1E-6	2E-3	2E-2
		Y, see ^{136}Nd	—	6E5	3E-4	9E-7	—	—
60	Neodymium-147	W, see ^{136}Nd	1E3	9E2	4E-7	1E-9	—	—
			LLI wall (1E3)	—	—	—	2E-5	2E-4
		Y, see ^{136}Nd	—	8E2	4E-7	1E-9	—	—

60	Neodymium-149[2]	W, see ^{136}Nd	1E4	3E4	1E-5	4E-8	1E-4	1E-3
		Y, see ^{136}Nd	—	2E4	1E-5	3E-8	—	—
60	Neodymium-151[2]	W, see ^{136}Nd	7E4	2E5	8E-5	3E-7	9E-4	9E-3
		Y, see ^{136}Nd	—	2E5	8E-5	3E-7	—	—
61	Promethium-141[2]	W, all compounds except those given for Y	5E4	2E5	8E-5	3E-7	—	—
			St wall (6E4)	—	—	—	8E-4	8E-3
		Y, oxides, hydroxides, carbides, and fluorides	—	2E5	7E-5	2E-7	—	—
61	Promethium-143	W, see ^{141}Pm	5E3	6E2	2E-7	8E-10	7E-5	7E-4
		Y, see ^{141}Pm	—	7E2	3E-7	1E-9	—	—
61	Promethium-144	W, see ^{141}Pm	1E3	1E2	5E-8	2E-10	2E-5	2E-4
		Y, see ^{141}Pm	—	1E2	5E-8	2E-10	—	—
61	Promethium-145	W, see ^{141}Pm	1E4	2E2	7E-8	—	1E-4	1E-3
			—	Bone surf (2E2)	—	3E-10	—	—
		Y, see ^{141}Pm	—	2E2	8E-8	3E-10	—	—
61	Promethium-146	W, see ^{141}Pm	2E3	5E1	2E-8	7E-11	2E-5	2E-4
		Y, see ^{141}Pm	—	4E1	2E-8	6E-11	—	—
61	Promethium-147	W, see ^{141}Pm	4E3	1E2	5E-8	—	—	—
			LLI wall (5E3)	Bone surf (2E2)	—	3E-10	7E-5	7E-4
		Y, see ^{141}Pm	—	1E2	6E-8	2E-10	—	—
61	Promethium-	W, see	7E2	3E2	1E-7	4E-10	1E-5	1E-4

	148m	^{141}Pm						
		Y, see ^{141}Pm	—	3E2	1E-7	5E-10	—	—
61	Promethium-148	W, see ^{141}Pm	4E2	5E2	2E-7	8E-10	—	—
			LLI wall (5E2)	—	—	—	7E-6	7E-5
		Y, see ^{141}Pm	—	5E2	2E-7	7E-10	—	—
61	Promethium-149	W, see ^{141}Pm	1E3	2E3	8E-7	3E-9	—	—
			LLI wall (1E3)	—	—	—	2E-5	2E-4
		Y, see ^{141}Pm	—	2E3	8E-7	2E-9	—	—
61	Promethium-150	W, see ^{141}Pm	5E3	2E4	8E-6	3E-8	7E-5	7E-4
		Y, see ^{141}Pm	—	2E4	7E-6	2E-8	—	—
61	Promethium-151	W, see ^{141}Pm	2E3	4E3	1E-6	5E-9	2E-5	2E-4
		Y, see ^{141}Pm	—	3E3	1E-6	4E-9	—	—
62	Samarium-141m[2]	W, all compounds	3E4	1E5	4E-5	1E-7	4E-4	4E-3
62	Samarium-141[2]	W, all compounds	5E4	2E5	8E-5	2E-7	—	—
			St wall (6E4)	—	—	—	8E-4	8E-3
62	Samarium-142[2]	W, all compounds	8E3	3E4	1E-5	4E-8	1E-4	1E-3
62	Samarium-145	W, all compounds	6E3	5E2	2E-7	7E-10	8E-5	8E-4
62	Samarium-146	W, all compounds	1E1	4E2	1E-11	—	—	—
			Bone surf (3E1)	Bone surf (6E-2)	—	9E-14	3E-7	3E-6
62	Samarium-147	W, all compounds	2E1	4E2	2E-11	—	—	—
			Bone surf (3E1)	Bone surf (7E-2)	—	1E-13	4E-7	4E-6
62	Samarium-151	W, all compounds	1E4	1E2	4E-8	—	—	—
			LLI wall (1E4)	Bone surf (2E2)	—	2E-10	2E-4	2E-3
62	Samarium-	W, all	2E3	3E3	1E-6	4E-9	—	—

	153	compounds	LLI wall (2E3)	—	—	—	3E-5	3E-4
62	Samarium-155[2]	W, all compounds	6E4	2E5	9E-5	3E-7	—	—
			St wall (8E4)	—	—	—	1E-3	1E-2
62	Samarium-156	W, all compounds	5E3	9E3	4E-6	1E-8	7E-5	7E-4
63	Europium-145	W, all compounds	2E3	2E3	8E-7	3E-9	2E-5	2E-4
63	Europium-146	W, all compounds	1E3	1E3	5E-7	2E-9	1E-5	1E-4
63	Europium-147	W, all compounds	3E3	2E3	7E-7	2E-9	4E-5	4E-4
63	Europium-148	W, all compounds	1E3	4E2	1E-7	5E-10	1E-5	1E-4
63	Europium-149	W, all compounds	1E4	3E3	1E-6	4E-9	2E-4	2E-3
63	Europium-150 (12.62h)	W, all compounds	3E3	8E3	4E-6	1E-8	4E-5	4E-4
63	Europium-150 (34.2 y)	W, all compounds	8E2	2E1	8E-9	3E-11	1E-5	1E-4
63	Europium-152m	W, all compounds	3E3	6E3	3E-6	9E-9	4E-5	4E-4
63	Europium-152	W, all compounds	8E2	2E1	1E-8	3E-11	1E-5	1E-4
63	Europium-154	W, all compounds	5E2	2E1	8E-9	3E-11	7E-6	7E-5
63	Europium-155	W, all compounds	4E3	9E1	4E-8	—	5E-5	5E-4
			—	Bone surf (1E2)	—	2E-10	—	—
63	Europium-156	W, all compounds	6E2	5E2	2E-7	6E-10	8E-6	8E-5
63	Europium-157	W, all compounds	2E3	5E3	2E-6	7E-9	3E-5	3E-4
63	Europium-158[2]	W, all compounds	2E4	6E4	2E-5	8E-8	3E-4	3E-3
64	Gadolinium-145[2]	D, all compounds	5E4	2E5	6E-5	2E-7	—	—
		except those	St wall					
		given for W	(5E4)	—	—	—	6E-4	6E-3

		W, oxides, hydroxides, and fluorides	—	2E5	7E-5	2E-7	—	—
64	Gadolinium-146	D, see ^{145}Gd	1E3	1E2	5E-8	2E-10	2E-5	2E-4
		W, see ^{145}Gd	—	3E2	1E-7	4E-10	—	—
64	Gadolinium-147	D, see ^{145}Gd	2E3	4E3	2E-6	6E-9	3E-5	3E-4
		W, see ^{145}Gd	—	4E3	1E-6	5E-9	—	—
64	Gadolinium-148	D, see ^{145}Gd	1E1	8E3	3E-12	—	—	—
			Bone surf (2E1)	Bone surf (2E2)	—	2E-14	3E-7	3E-6
		W, see ^{145}Gd	—	3E-2	1E-11	—	—	—
			—	Bone surf (6E-2)	—	8E-14	—	—
64	Gadolinium-149	D, see ^{145}Gd	3E3	2E3	9E-7	3E-9	4E-5	4E-4
		W, see ^{145}Gd	—	2E3	1E-6	3E-9	—	—
64	Gadolinium-151	D, see ^{145}Gd	6E3	4E2	2E-7	—	9E-5	9E-4
			—	Bone surf (6E2)	—	9E-10	—	—
		W, see ^{145}Gd	—	1E3	5E-7	2E-9	—	—
64	Gadolinium-152	D, see ^{145}Gd	2E1	1E-2	4E-12	—	—	—
			Bone surf (3E1)	Bone surf (2E-2)	—	3E-14	4E-7	4E-6
		W, see ^{145}Gd	—	4E-2	2E-11	—	—	—
			—	Bone surf (8E-2)	—	1E-13	—	—
64	Gadolinium-153	D, see ^{145}Gd	5E3	1E2	6E-8	—	6E-5	6E-4
			—	Bone surf (2E2)	—	3E-10	—	—

		W, see ^{145}Gd	—	6E2	2E-7	8E-10	—	—
64	Gadolinium-159	D, see ^{145}Gd	3E3	8E3	3E-6	1E-8	4E-5	4E-4
		W, see ^{145}Gd	—	6E3	2E-6	8E-9	—	—
65	Terbium-147[2]	W, all compounds	9E3	3E4	1E-5	5E-8	1E-4	1E-3
65	Terbium-149	W, all compounds	5E3	7E2	3E-7	1E-9	7E-5	7E-4
65	Terbium-150	W, all compounds	5E3	2E4	9E-6	3E-8	7E-5	7E-4
65	Terbium-151	W, all compounds	4E3	9E3	4E-6	1E-8	5E-5	5E-4
65	Terbium-153	W, all compounds	5E3	7E3	3E-6	1E-8	7E-5	7E-4
65	Terbium-154	W, all compounds	2E3	4E3	2E-6	6E-9	2E-5	2E-4
65	Terbium-155	W, all compounds	6E3	8E3	3E-6	1E-8	8E-5	8E-4
65	Terbium-156m (5.0 h)	W, all compounds	2E4	3E4	1E-5	4E-8	2E-4	2E-3
65	Terbium-156m (24.4 h)	W, all compounds	7E3	8E3	3E-6	1E-8	1E-4	1E-3
65	Terbium-156	W, all compounds	1E3	1E3	6E-7	2E-9	1E-5	1E-4
65	Terbium-157	W, all compounds	5E4	3E2	1E-7	—	—	—
			LLI wall (5E4)	Bone surf (6E2)	—	(6E2)	7E-4	7E-3
65	Terbium-158	W, all compounds	1E3	2E1	8E-9	3E-11	2E-5	2E-4
65	Terbium-160	W, all compounds	8E2	2E2	9E-8	3E-10	1E-5	1E-4
65	Terbium-161	W, all compounds	2E3	2E3	7E-7	2E-9	—	—
			LLI wall (2E3)	—	—	—	3E-5	3E-4
66	Dysprosium-155	W, all compounds	9E3	3E4	1E-5	4E-8	1E-4	1E-3
66	Dysprosium-157	W, all compounds	2E4	6E4	3E-5	9E-8	3E-4	3E-3
66	Dysprosium-159	W, all compounds	1E4	2E3	1E-6	3E-9	2E-4	2E-3

66	Dysprosium-165	W, all compounds	1E4	5E4	2E-5	6E-8	2E-4	2E-3
66	Dysprosium-166	W, all compounds	6E2	7E2	3E-7	1E-9	—	—
			LLI wall (8E2)	—	—	—	1E-5	1E-4
67	Holmium-155[2]	W, all compounds	4E4	2E5	6E-5	2E-7	6E-4	6E-3
67	Holmium-157[2]	W, all compounds	3E5	1E6	6E-4	2E-6	4E-3	4E-2
67	Holmium-159[2]	W, all compounds	2E5	1E6	4E-4	1E-6	3E-3	3E-2
67	Holmium-161	W, all compounds	1E5	4E5	2E-4	6E-7	1E-3	1E-2
67	Holmium-162m[2]	W, all compounds	5E4	3E5	1E-4	4E-7	7E-4	7E-3
67	Holmium-162[2]	W, all compounds	5E5	2E6	1E-3	3E-6	—	—
			St wall (8E5)	—	—	—	1E-2	1E-1
67	Holmium-164m[2]	W, all compounds	1E5	3E5	1E-4	4E-7	1E-3	1E-2
67	Holmium-164[2]	W, all compounds	2E5	6E5	3E-4	9E-7	—	—
			St wall (2E5)	—	—	—	3E-3	3E-2
67	Holmium-166m	W, all compounds	6E2	7E0	3E-9	9E-12	9E-6	9E-5
67	Holmium-166	W, all compounds	9E2	2E3	7E-7	2E-9	—	—
			LLI wall (9E2)	—	—	—	1E-5	1E-4
67	Holmium-167	W, all compounds	2E4	6E4	2E-5	8E-8	2E-4	2E-3
68	Erbium-161	W, all compounds	2E4	6E4	3E-5	9E-8	2E-4	2E-3
68	Erbium-165	W, all compounds	6E4	2E5	8E-5	3E-7	9E-4	9E-3
68	Erbium-169	W, all compounds	3E3	3E3	1E-6	4E-9	—	—
			LLI wall (4E3)	—	—	—	5E-5	5E-4
68	Erbium-171	W, all compounds	4E3	1E4	4E-6	1E-8	5E-5	5E-4
68	Erbium-172	W, all compounds	1E3	1E3	6E-7	2E-9	—	—
			LLI wall	—	—	—	2E-5	2E-4

			(E3)					
69	Thulium-162[2]	W, all compounds	7E4	3E5	1E-4	4E-7	—	—
			St wall (7E4)	—	—	—	1E-3	1E-2
69	Thulium-166	W, all compounds	4E3	1E4	6E-6	2E-8	6E-5	6E-4
69	Thulium-167	W, all compounds	2E3	2E3	8E-7	3E-9	—	—
			LLI wall (2E3)	—	—	—	3E-5	3E-4
69	Thulium-170	W, all compounds	8E2	2E2	9E-8	3E-10	—	—
			LLI wall (1E3)	—	—	—	1E-5	1E-4
69	Thulium-171	W, all compounds	1E4	3E2	1E-7	—	—	—
			LLI wall (1E4)	Bone surf (6E2)	—	8E-10	2E-4	2E-3
69	Thulium-172	W, all compounds	7E2	1E3	5E-7	2E-9	—	—
			LLI wall (8E2)	—	—	—	1E-5	1E-4
69	Thulium-173	W, all compounds	4E3	1E4	5E-6	2E-8	6E-5	6E-4
69	Thulium-175[2]	W, all compounds	7E4	3E5	1E-4	4E-7	—	—
			St wall (9E4)	—	—	—	1E-3	1E-2
70	Ytterbium-162[2]	W, all compounds except those given for Y	7E4	3E5	1E-4	4E-7	1E-3	1E-2
		Y, oxides, hydroxides, and fluorides	—	3E5	1E-4	4E-7	—	—
70	Ytterbium-166	W, see ^{162}Yb	1E3	2E3	8E-7	3E-9	2E-5	2E-4
		Y, see ^{162}Yb	—	2E3	8E-7	3E-9	—	—
70	Ytterbium-167[2]	W, see ^{162}Yb	3E5	8E5	3E-4	1E-6	4E-3	4E-2
		Y, see ^{162}Yb	—	7E5	3E-4	1E-6	—	—
70	Ytterbium-	W, see	2E3	8E2	4E-7	1E-9	2E-5	2E-4

	169	^{162}Yb						
		Y, see ^{162}Yb	—	7E2	3E-7	1E-9	—	—
70	Ytterbium-175	W, see ^{162}Yb	3E3	4E3	1E-6	5E-9	—	—
			LLI wall (3E3)	—	—	—	4E-5	4E-4
		Y, see ^{162}Yb	—	3E3	1E-6	5E-9	—	—
70	Ytterbium-177[2]	W, see ^{162}Yb	2E4	5E4	2E-5	7E-8	2E-4	2E-3
		Y, see ^{162}Yb	—	5E4	2E-5	6E-8	—	—
70	Ytterbium-178[2]	W, see ^{162}Yb	1E4	4E4	2E-5	6E-8	2E-4	2E-3
		Y, see ^{162}Yb	—	4E4	2E-5	5E-8	—	—
71	Lutetium-169	W, all compounds except those given for Y	3E3	4E3	2E-6	6E-9	3E-5	3E-4
		Y, oxides, hydroxides, and fluorides	—	4E3	2E-6	6E-9	—	—
71	Lutetium-170	W, see ^{169}Lu	1E3	2E3	9E-7	3E-9	2E-5	2E-4
		Y, see ^{169}Lu	—	2E3	8E-7	3E-9	—	—
71	Lutetium-171	W, see ^{169}Lu	2E3	2E3	8E-7	3E-9	3E-5	3E-4
		Y, see ^{169}Lu	—	2E3	8E-7	3E-9	—	—
71	Lutetium-172	W, see ^{169}Lu	1E3	1E3	5E-7	2E-9	1E-5	1E-4
		Y, see ^{169}Lu	—	1E3	5E-7	2E-9	—	—
71	Lutetium-173	W, see ^{169}Lu	5E3	3E2	1E-7	—	7E-5	7E-4
			—	Bone surf (5E2)	—	6E-10	—	—
		Y, see ^{169}Lu	—	3E2	1E-7	4E-10	—	—

71	Lutetium-174m	W, see ^{169}Lu	2E3	2E2	1E-7	—	—	—
			LLI wall (3E3)	Bone surf (3E2)	—	5E-10	4E-5	4E-4
		Y, see ^{169}Lu	—	2E2	9E-8	3E-10	—	—
71	Lutetium-174	W, see ^{169}Lu	5E3	1E2	5E-8	—	7E-5	7E-4
			—	Bone surf (2E2)	—	3E-10	—	—
		Y, see ^{169}Lu	—	2E2	6E-8	2E-10	—	—
71	Lutetium-176m	W, see ^{169}Lu	8E3	3E4	1E-5	3E-8	1E-4	1E-3
		Y, see ^{169}Lu	—	2E4	9E-6	3E-8	—	—
71	Lutetium-176	W, see ^{169}Lu	7E2	5E0	2E-9	—	1E-5	1E-4
			—	Bone surf (1E1)	—	2E-11	—	—
		Y, see ^{169}Lu	—	8E0	3E-9	1E-11	—	—
71	Lutetium-177m	W, see ^{169}Lu	7E2	1E2	5E-8	—	1E-5	1E-4
			—	Bone surf (1E2)	—	2E-10	—	—
		Y, see ^{169}Lu	—	8E1	3E-8	1E-10	—	—
71	Lutetium-177	W, see ^{169}Lu	2E3	2E3	9E-7	3E-9	—	—
			LLI wall (3E3)	—	—	—	4E-5	4E-4
		Y, see ^{169}Lu	—	2E3	9E-7	3E-9	—	—
71	Lutetium-178m[2]	W, see ^{169}Lu	5E4	2E5	8E-5	3E-7	—	—
			St wall (6E4)	—	—	—	8E-4	8E-3
		Y, see ^{169}Lu	—	2E5	7E-5	2E-7	—	—
71	Lutetium-178[2]	W, see ^{169}Lu	4E4	1E5	5E-5	2E-7	—	—
			St wall (4E4)	—	—	—	6E-4	6E-3
		Y, see ^{169}Lu	—	1E5	5E-5	2E-7	—	—
71	Lutetium-179	W, see	6E3	2E4	8E-6	3E-8	9E-5	9E-4

		^{169}Lu						
		Y, see ^{169}Lu	—	2E4	6E-6	3E-8	—	—
72	Hafnium-170	D, all compounds except those given for W	3E3	6E3	2E-6	8E-9	4E-5	4E-4
		W, oxides, hydroxides, carbides, and nitrates	—	5E3	2E-6	6E-9	—	—
72	Hafnium-172	D, see ^{170}Hf	1E3	9E0	4E-9	—	2E-5	2E-4
			—	Bone surf (2E1)	—	3E-11	—	—
		W, see ^{170}Hf	—	4E1	2E-8	—	—	—
			—	Bone surf (6E1)	—	8E-11	—	—
72	Hafnium-173	D, see ^{170}Hf	5E3	1E4	5E-6	2E-8	7E-5	7E-4
		W, see ^{170}Hf	—	1E4	5E-6	2E-8	—	—
72	Hafnium-175	D, see ^{170}Hf	3E3	9E2	4E-7	—	4E-5	4E-4
			—	Bone surf (1E3)	—	1E-9	—	—
		W, see ^{170}Hf	—	1E3	5E-7	2E-9	—	—
72	Hafnium-177m[2]	D, see ^{170}Hf	2E4	6E4	2E-5	8E-8	3E-4	3E-3
		W, see ^{170}Hf	—	9E4	4E-5	1E-7	—	—
72	Hafnium-178m	D, see ^{170}Hf	3E2	1E0	5E-10	—	3E-6	3E-5
			—	Bone surf (2E0)	—	3E-12	—	—
		W, see ^{170}Hf	—	5E0	2E-9	—	—	—
			—	Bone surf (9E0)	—	1E-11	—	—
72	Hafnium-179m	D, see ^{170}Hf	1E3	3E2	1E-7	—	1E-5	1E-4
			—	Bone surf	—	8E-10	—	—

				(6E2)				
		W, see ^{170}Hf	—	6E2	3E-7	8E-10	—	—
72	Hafnium-180m	D, see ^{170}Hf	7E3	2E4	9E-6	3E-8	1E-4	1E-3
		W, see ^{170}Hf	—	3E4	1E-5	4E-8	—	—
72	Hafnium-181	D, see ^{170}Hf	1E3	2E2	7E-8	—	2E-5	2E-4
			—	Bone surf (4E2)	—	6E-10	—	—
		W, see ^{170}Hf	—	4E2	2E-7	6E-10	—	—
72	Hafnium-182m[2]	D, see ^{170}Hf	4E4	9E4	4E-5	1E-7	5E-4	5E-3
		W, see ^{170}Hf	—	1E5	6E-5	2E-7	—	—
72	Hafnium-182	D, see ^{170}Hf	2E2	8E-1	3E-10	—	—	—
			Bone surf (4E2)	Bone surf (2E0)	—	2E-12	5E-6	5E-5
		W, see ^{170}Hf	—	3E0	1E-9	—	—	—
			—	Bone surf (7E0)	—	1E-11	—	—
72	Hafnium-183[2]	D, see ^{170}Hf	2E4	5E4	2E-5	6E-8	3E-4	3E-3
		W, see ^{170}Hf	—	6E4	2E-5	8E-8	—	—
72	Hafnium-184	D, see ^{170}Hf	2E3	8E3	3E-6	1E-8	3E-5	3E-4
		W, see ^{170}Hf	—	6E3	3E-6	9E-9	—	—
73	Tantalum-172[2]	W, all compounds except those given for Y	4E4	1E5	5E-5	2E-7	5E-4	5E-3
		Y, elemental Ta, oxides, hydroxides, halides, carbides, nitrates,	—	1E5	4E-5	1E-7	—	—

		and nitrides						
73	Tantalum-173	W, see ^{172}Ta	7E3	2E4	8E-6	3E-8	9E-5	9E-4
		Y, see ^{172}Ta	—	2E4	7E-6	2E-8	—	—
73	Tantalum-174[2]	W, see ^{172}Ta	3E4	1E5	4E-5	1E-7	4E-4	4E-3
		Y, see ^{172}Ta	—	9E4	4E-5	1E-7	—	—
73	Tantalum-175	W, see ^{172}Ta	6E3	2E4	7E-6	2E-8	8E-5	8E-4
		Y, see ^{172}Ta	—	1E4	6E-6	2E-8	—	—
73	Tantalum-176	W, see ^{172}Ta	4E3	1E4	5E-6	2E-8	5E-5	5E-4
		Y, see ^{172}Ta	—	1E4	5E-6	2E-8	—	—
73	Tantalum-177	W, see ^{172}Ta	1E4	2E4	8E-6	3E-8	2E-4	2E-3
		Y, see ^{172}Ta	—	2E4	7E-6	2E-8	—	—
73	Tantalum-178	W, see ^{172}Ta	2E4	9E4	4E-5	1E-7	2E-4	2E-3
		Y, see ^{172}Ta	—	7E4	3E-5	1E-7	—	—
73	Tantalum-179	W, see ^{172}Ta	2E4	5E3	2E-6	8E-9	3E-4	3E-3
		Y, see ^{172}Ta	—	9E2	4E-7	1E-9	—	—
73	Tantalum-180m	W, see ^{172}Ta	2E4	7E4	3E-5	9E-8	3E-4	3E-3
		Y, see ^{172}Ta	—	6E4	2E-5	8E-8	—	—
73	Tantalum-180	W, see ^{172}Ta	1E3	4E2	2E-7	6E-10	2E-5	2E-4
		Y, see ^{172}Ta	—	2E1	1E-8	3E-11	—	—
73	Tantalum-182m[2]	W, see ^{172}Ta	2E5	5E5	2E-4	8E-7	—	—
			St wall (2E5)	—	—	—	3E-3	3E-2
		Y, see ^{172}Ta	—	4E5	2E-4	6E-7	—	—
73	Tantalum-182	W, see	8E2	3E2	1E-7	5E-10	1E-5	1E-4

		^{172}Ta						
		Y, see ^{172}Ta	—	1E2	6E-8	2E-10	—	—
73	Tantalum-183	W, see ^{172}Ta	9E2	1E3	5E-7	2E-9	—	—
			LLI wall (1E3)	—	—	—	2E-5	2E-4
		Y, see ^{172}Ta	—	1E3	4E-7	1E-9	—	—
73	Tantalum-184	W, see ^{172}Ta	2E3	5E3	2E-6	8E-9	3E-5	3E-4
		Y, see ^{172}Ta	—	5E3	2E-6	7E-9	—	—
73	Tantalum-185[2]	W, see ^{172}Ta	3E4	7E4	3E-5	1E-7	4E-4	4E-3
		Y, see ^{172}Ta	—	6E4	3E-5	9E-8	—	—
73	Tantalum-186[2]	W, see ^{172}Ta	5E4	2E5	1E-4	3E-7	—	—
			St wall (7E4)	—	—	—	1E-3	1E-2
		Y, see ^{172}Ta	—	2E5	9E-5	3E-7	—	—
74	Tungsten-176	D, all compounds	1E4	5E4	2E-5	7E-8	1E-4	1E-3
74	Tungsten-177	D, all compounds	2E4	9E4	4E-5	1E-7	3E-4	3E-3
74	Tungsten-178	D, all compounds	5E3	2E4	8E-6	3E-8	7E-5	7E-4
74	Tungsten-179[2]	D, all compounds	5E5	2E6	7E-4	2E-6	7E-3	7E-2
74	Tungsten-181	D, all compounds	2E4	3E4	1E-5	5E-8	2E-4	2E-3
74	Tungsten-185	D, all compounds	2E3	7E3	3E-6	9E-9	—	—
			LLI wall (3E3)	—	—	—	4E-5	4E-4
74	Tungsten-187	D, all compounds	2E3	9E3	4E-6	1E-8	3E-5	3E-4
74	Tungsten-188	D, all compounds	4E2	1E3	5E-7	2E-9	—	—
			LLI wall (5E2)	—	—	—	7E-6	7E-5
75	Rhenium-177[2]	D, all compounds	9E4	3E5	1E-4	4E-7	—	—

		except those given for W	St wall (1E5)	—	—	—	2E-3	2E-2
		W, oxides, hydroxides, and nitrates	—	4E5	1E-4	5E-7	—	—
75	Rhenium-178[2]	D, see ^{177}Re	7E4	3E5	1E-4	4E-7	—	—
			St wall (1E5)	—	—	—	1E-3	1E-2
		W, see ^{177}Re	—	3E5	1E-4	4E-7	—	—
75	Rhenium-181	D, see ^{177}Re	5E3	9E3	4E-6	1E-8	7E-5	7E-4
		W, see ^{177}Re	—	9E3	4E-6	1E-8	—	—
75	Rhenium-182 (12.7 h)	D, see ^{177}Re	7E3	1E4	5E-6	2E-8	9E-5	9E-4
		W, see ^{177}Re	—	2E4	6E-6	2E-8	—	—
75	Rhenium-182 (64.0 h)	D, see ^{177}Re	1E3	2E3	1E-6	3E-9	2E-5	2E-4
		W, see ^{177}Re	—	2E3	9E-7	3E-9	—	—
75	Rhenium-184m	D, see ^{177}Re	2E3	3E3	1E-6	4E-9	3E-5	3E-4
		W, see ^{177}Re	—	4E2	2E-7	6E-10	—	—
75	Rhenium-184	D, see ^{177}Re	2E3	4E3	1E-6	5E-9	3E-5	3E-4
		W, see ^{177}Re	—	1E3	6E-7	2E-9	—	—
75	Rhenium-186m	D, see ^{177}Re	1E3	2E3	7E-7	—	—	—
			St wall (2E3)	St wall (2E3)	—	3E-9	2E-5	2E-4
		W, see ^{177}Re	—	2E2	6E-8	2E-10	—	—
75	Rhenium-186	D, see ^{177}Re	2E3	3E3	1E-6	4E-9	3E-5	3E-4
		W, see ^{177}Re	—	2E3	7E-7	2E-9	—	—
75	Rhenium-187	D, see ^{177}Re	6E5	8E5	4E-4	—	8E-3	8E-2
			St wall					

			—	(9E5)	—	1E-6	—	—
		W, see ^{177}Re	—	1E5	4E-5	1E-7	—	—
75	Rhenium-188m[2]	D, see ^{177}Re	8E4	1E5	6E-5	2E-7	1E-3	1E-2
		W, see ^{177}Re	—	1E5	6E-5	2E-7	—	—
75	Rhenium-188	D, see ^{177}Re	2E3	3E3	1E-6	4E-9	2E-5	2E-4
		W, see ^{177}Re	—	3E3	1E-6	4E-9	—	—
75	Rhenium-189	D, see ^{177}Re	3E3	5E3	2E-6	7E-9	4E-5	4E-4
		W, see ^{177}Re	—	4E3	2E-6	6E-9	—	—
76	Osmium-180[2]	D, all compounds except those given for W and Y	1E5	4E5	2E-4	5E-7	1E-3	1E-2
		W, halides and nitrates	—	5E5	2E-4	7E-7	—	—
		Y, oxides and hydroxides	—	5E5	2E-4	6E-7	—	—
76	Osmium-181[2]	D, see ^{180}Os	1E4	4E4	2E-5	6E-8	2E-4	2E-3
		W, see ^{180}Os	—	5E4	2E-5	6E-8	—	—
		Y, see ^{180}Os	—	4E4	2E-5	6E-8	—	—
76	Osmium-182	D, see ^{180}Os	2E3	6E3	2E-6	8E-9	3E-5	3E-4
		W, see ^{180}Os	—	4E3	2E-6	6E-9	—	—
		Y, see ^{180}Os	—	4E3	2E-6	6E-9	—	—
76	Osmium-185	D, see ^{180}Os	2E3	5E2	2E-7	7E-10	3E-5	3E-4
		W, see ^{180}Os	—	8E2	3E-7	1E-9	—	—
		Y, see ^{180}Os	—	8E2	3E-7	1E-9	—	—

76	Osmium-189m	D, see ^{180}Os	8E4	2E5	1E-4	3E-7	1E-3	1E-2
		W, see ^{180}Os	—	2E5	9E-5	3E-7	—	—
		Y, see ^{180}Os	—	2E5	7E-5	2E-7	—	—
76	Osmium-191m	D, see ^{180}Os	1E4	3E4	1E-5	4E-8	2E-4	2E-3
		W, see ^{180}Os	—	2E4	8E-6	3E-8	—	—
		Y, see ^{180}Os	—	2E4	7E-6	2E-8	—	—
76	Osmium-191	D, see ^{180}Os	2E3	2E3	9E-7	3E-9	—	—
			LLI wall (3E3)	—	—	—	3E-5	3E-4
		W, see ^{180}Os	—	2E3	7E-7	2E-9	—	—
		Y, see ^{180}Os	—	1E3	6E-7	2E-9	—	—
76	Osmium-193	D, see ^{180}Os	2E3	5E3	2E-6	6E-9	—	—
			LLI wall (2E3)	—	—	—	2E-5	2E-4
		W, see ^{180}Os	—	3E3	1E-6	4E-9	—	—
		Y, see ^{180}Os	—	3E3	1E-6	4E-9	—	—
76	Osmium-194	D, see ^{180}Os	4E2	4E1	2E-8	6E-11	—	—
			LLI wall (6E2)	—	—	—	8E-6	8E-5
		W, see ^{180}Os	—	6E1	2E-8	8E-11	—	—
		Y, see ^{180}Os	—	8E0	3E-9	1E-11	—	—
77	Iridium-182[2]	D, all compounds						
		except those	4E4	1E5	6E-5	2E-7	—	—
		given for W	St wall					
		and Y	(4E4)	—	—	—	6E-4	6E-3
		W, halides,	—	2E5	6E-5	2E-7	—	—

		nitrates, and metallic iridium						
		Y, oxides and hydroxides	—	1E5	5E-5	2E-7	—	—
77	Iridium-184	D, see ^{182}Ir	8E3	2E4	1E-5	3E-8	1E-4	1E-3
		W, see ^{182}Ir	—	3E4	1E-5	5E-8	—	—
		Y, see ^{182}Ir	—	3E4	1E-5	4E-8	—	—
77	Iridium-185	D, see ^{182}Ir	5E3	1E4	5E-6	2E-8	7E-5	7E-4
		W, see ^{182}Ir	—	1E4	5E-6	2E-8	—	—
		Y, see ^{182}Ir	—	1E4	4E-6	1E-8	—	—
77	Iridium-186	D, see ^{182}Ir	2E3	8E3	3E-6	1E-8	3E-5	3E-4
		W, see ^{182}Ir	—	6E3	3E-6	9E-9	—	—
		Y, see ^{182}Ir	—	6E3	2E-6	8E-9	—	—
77	Iridium-187	D, see ^{182}Ir	1E4	3E4	1E-5	5E-8	1E-4	1E-3
		W, see ^{182}Ir	—	3E4	1E-5	4E-8	—	—
		Y, see ^{182}Ir	—	3E4	1E-5	4E-8	—	—
77	Iridium-188	D, see ^{182}Ir	2E3	5E3	2E-6	6E-9	3E-5	3E-4
		W, see ^{182}Ir	—	4E3	1E-6	5E-9	—	—
		Y, see ^{182}Ir	—	3E3	1E-6	5E-9	—	—
77	Iridium-189	D, see ^{182}Ir	5E3	5E3	2E-6	7E-9	—	—
			LLI wall (5E3)	—	—	—	7E-5	7E-4
		W, see ^{182}Ir	—	4E3	2E-6	5E-9	—	—
		Y, see ^{182}Ir	—	4E3	1E-6	5E-9	—	—
77	Iridium-190m[2]	D, see ^{182}Ir	2E5	2E5	8E-5	3E-7	2E-3	2E-2
		W, see ^{182}Ir	—	2E5	9E-5	3E-7	—	—
		Y, see ^{182}Ir	—	2E5	8E-5	3E-7	—	—
77	Iridium-190	D, see ^{182}Ir	1E3	9E2	4E-7	1E-9	1E-5	1E-4
		W, see ^{182}Ir	—	1E3	4E-7	1E-9	—	—
		Y, see ^{182}Ir	—	9E2	4E-7	1E-9	—	—
77	Iridium-192m	D, see ^{182}Ir	3E3	9E1	4E-8	1E-10	4E-5	4E-4
		W, see ^{182}Ir	—	2E2	9E-8	3E-10	—	—
		Y, see ^{182}Ir	—	2E1	6E-9	2E-11	—	—
77	Iridium-192	D, see ^{182}Ir	9E2	3E2	1E-7	4E-10	1E-5	1E-4
		W, see ^{182}Ir	—	4E2	2E-7	6E-10	—	—
		Y, see ^{182}Ir	—	2E2	9E-8	3E-10	—	—
77	Iridium-194m	D, see ^{182}Ir	6E2	9E1	4E-8	1E-10	9E-6	9E-5
		W, see ^{182}Ir	—	2E2	7E-8	2E-10	—	—

		Y, see ^{182}Ir	—	1E2	4E-8	1E-10	—	—
77	Iridium-194	D, see ^{182}Ir	1E3	3E3	1E-6	4E-9	1E-5	1E-4
		W, see ^{182}Ir	—	2E3	9E-7	3E-9	—	—
		Y, see ^{182}Ir	—	2E3	8E-7	3E-9	—	—
77	Iridium-195m	D, see ^{182}Ir	8E3	2E4	1E-5	3E-8	1E-4	1E-3
		W, see ^{182}Ir	—	3E4	1E-5	4E-8	—	—
		Y, see ^{182}Ir	—	2E4	9E-6	3E-8	—	—
77	Iridium-195	D, see ^{182}Ir	1E4	4E4	2E-5	6E-8	2E-4	2E-3
		W, see ^{182}Ir	—	5E4	2E-5	7E-8	—	—
		Y, see ^{182}Ir	—	4E4	2E-5	6E-8	—	—
78	Platinum-186	D, all compounds	1E4	4E4	2E-5	5E-8	2E-4	2E-3
78	Platinum-188	D, all compounds	2E3	2E3	7E-7	2E-9	2E-5	2E-4
78	Platinum-189	D, all compounds	1E4	3E4	1E-5	4E-8	1E-4	1E-3
78	Platinum-191	D, all compounds	4E3	8E3	4E-6	1E-8	5E-5	5E-4
78	Platinum-193m	D, all compounds	3E3	6E3	3E-6	8E-9	—	—
			LLI wall (3E4)	—	—	—	4E-5	4E-4
78	Platinum-193	D, all compounds	4E4	2E4	1E-5	3E-8	—	—
			LLI wall (5E4)	—	—	—	6E-4	6E-3
78	Platinum-195m	D, all compounds	2E3	4E3	2E-6	6E-9	—	—
			LLI wall (2E3)	—	—	—	3E-5	3E-4
78	Platinum-197m[2]	D, all compounds	2E4	4E4	2E-5	6E-8	2E-4	2E-3
78	Platinum-197	D, all compounds	3E3	1E4	4E-6	1E-8	4E-5	4E-4
78	Platinum-199[2]	D, all compounds	5E4	1E5	6E-5	2E-7	7E-4	7E-3
78	Platinum-200	D, all compounds	1E3	3E3	1E-6	5E-9	2E-5	2E-4
79	Gold-193	D, all compounds except those given for W and Y	9E3	3E4	1E-5	4E-8	1E-4	1E-3

		W, halides and nitrates	—	2E4	9E-6	3E-8	—	—
		Y, oxides and hydroxides	—	2E4	8E-6	3E-8	—	—
79	Gold-194	D, see ^{193}Au	3E3	8E3	3E-6	1E-8	4E-5	4E-4
		W, see ^{193}Au	—	5E3	2E-6	8E-9	—	—
		Y, see ^{193}Au	—	5E3	2E-6	7E-9	—	—
79	Gold-195	D, see ^{193}Au	5E3	1E4	5E-6	2E-8	7E-5	7E-4
		W, see ^{193}Au	—	1E3	6E-7	2E-9	—	—
		Y, see ^{193}Au	—	4E2	2E-7	6E-10	—	—
79	Gold-198m	D, see ^{193}Au	1E3	3E3	1E-6	4E-9	1E-5	1E-4
		W, see ^{193}Au	—	1E3	5E-7	2E-9	—	—
		Y, see ^{193}Au	—	1E3	5E-7	2E-9	—	—
79	Gold-198	D, see ^{193}Au	1E3	4E3	2E-6	5E-9	2E-5	2E-4
		W, see ^{193}Au	—	2E3	8E-7	3E-9	—	—
		Y, see ^{193}Au	—	2E3	7E-7	2E-9	—	—
79	Gold-199	D, see ^{193}Au	3E3	9E3	4E-6	1E-8	—	—
			LLI wall (3E3)	—	—	—	4E-5	4E-4
		W, see ^{193}Au	—	4E3	2E-6	6E-9	—	—
		Y, see ^{193}Au	—	4E3	2E-6	5E-9	—	—
79	Gold-200m	D, see ^{193}Au	1E3	4E3	1E-6	5E-9	2E-5	2E-4
		W, see ^{193}Au	—	3E3	1E-6	4E-9	—	—
		Y, see ^{193}Au	—	2E4	1E-6	3E-9	—	—
79	Gold-200[2]	D, see	3E4	6E4	3E-5	9E-8	4E-4	4E-3

		^{193}Au						
		W, see ^{193}Au	—	8E4	3E-5	1E-7	—	—
		Y, see ^{193}Au	—	7E4	3E-5	1E-7	—	—
79	Gold-201[2]	D, see ^{193}Au	7E4	2E5	9E-5	3E-7	—	—
			St wall (9E4)	—	—	—	1E-3	1E-2
		W, see ^{193}Au	—	2E5	1E-4	3E-7	—	—
		Y, see ^{193}Au	—	2E5	9E-5	3E-7	—	—
80	Mercury-193m	Vapor	—	8E3	4E-6	1E-8	—	—
		Organic D	4E3	1E4	5E-6	2E-8	6E-5	6E-4
		D, sulfates	3E3	9E3	4E-6	1E-8	4E-5	4E-4
		W, oxides, hydroxides, halides, nitrates, and sulfides	—	8E3	3E-6	1E-8	—	—
80	Mercury-193	Vapor	—	3E4	1E-5	4E-8	—	—
		Organic D	2E4	6E4	3E-5	9E-8	3E-4	3E-3
		D, see ^{193m}Hg	2E4	4E4	2E-5	6E-8	2E-4	2E-3
		W, see ^{193m}Hg	—	4E4	2E-5	6E-8	—	—
80	Mercury-194	Vapor	—	3E1	1E-8	4E-11	—	—
		Organic D	2E1	3E1	1E-8	4E-11	2E-7	2E-6
		D, see ^{193m}Hg	8E2	4E1	2E-8	6E-11	1E-5	1E-4
		W, see ^{193m}Hg	—	1E2	5E-8	2E-10	—	—
80	Mercury-195m	Vapor	—	4E3	2E-6	6E-9	—	—
		Organic D	3E3	6E3	3E-6	8E-9	4E-5	4E-4
		D, see ^{193m}Hg	2E3	5E3	2E-6	7E-9	3E-5	3E-4
		W, see ^{193m}Hg	—	4E3	2E-6	5E-9	—	—
80	Mercury-195	Vapor	—	3E4	1E-5	4E-8	—	—
		Organic D	2E4	5E4	2E-5	6E-8	2E-4	2E-3
		D, see	1E4	4E4	1E-5	5E-8	2E-4	2E-3

		^{193m}Hg						
		W, see ^{193m}Hg	—	3E4	1E-5	5E-8	—	—
80	Mercury-197m	Vapor	—	5E3	2E-6	7E-9	—	—
		Organic D	4E3	9E3	4E-6	1E-8	5E-5	5E-4
		D, see ^{193m}Hg	3E3	7E3	3E-6	1E-8	4E-5	4E-4
		W, see ^{193m}Hg	—	5E3	2E-6	7E-9	—	—
80	Mercury-197	Vapor	—	8E3	4E-6	1E-8	—	—
		Organic D	7E3	1E4	6E-6	2E-8	9E-5	9E-4
		D, see ^{193m}Hg	6E3	1E4	5E-6	2E-8	8E-5	8E-4
		W, see ^{193m}Hg	—	9E3	4E-6	1E-8	—	—
80	Mercury-199m[2]	Vapor	—	8E4	3E-5	1E-7	—	—
		Organic D	6E4	2E5	7E-5	2E-7	—	—
			St wall (1E5)	—	—	—	1E-3	1E-2
		D, see ^{193m}Hg	6E4	1E5	6E-5	2E-7	8E-4	8E-3
		W, see ^{193m}Hg	—	2E5	7E-5	2E-7	—	—
80	Mercury-203	Vapor	—	8E2	4E-7	1E-9	—	—
		Organic D	5E2	8E2	3E-7	1E-9	7E-6	7E-5
		D, see ^{193m}Hg	2E3	1E3	5E-7	2E-9	3E-5	3E-4
		W, see ^{193m}Hg	—	1E3	5E-7	2E-9	—	—
81	Thallium-194m[2]	D, all compounds	5E4	2E5	6E-5	2E-7	—	—
			St wall (7E4)	—	—	—	1E-3	1E-2
81	Thallium-194[2]	D, all compounds	3E5	6E5	2E-4	8E-7	—	—
			St wall (3E5)	—	—	—	4E-3	4E-2
81	Thallium-195[2]	D, all compounds	6E4	1E5	5E-5	2E-7	9E-4	9E-3
81	Thallium-197	D, all compounds	7E4	1E5	5E-5	2E-7	1E-3	1E-2
81	Thallium-198m[2]	D, all compounds	3E4	5E4	2E-5	8E-8	4E-4	4E-3
81	Thallium-198	D, all	2E4	3E4	1E-5	5E-8	3E-4	3E-3

		compounds						
81	Thallium-199	D, all compounds	6E4	8E4	4E-5	1E-7	9E-4	9E-3
81	Thallium-200	D, all compounds	8E3	1E4	5E-6	2E-8	1E-4	1E-3
81	Thallium-201	D, all compounds	2E4	2E4	9E-6	3E-8	2E-4	2E-3
81	Thallium-202	D, all compounds	4E3	5E3	2E-6	7E-9	5E-5	5E-4
81	Thallium-204	D, all compounds	2E3	2E3	9E-7	3E-9	2E-5	2E-4
82	Lead-195m[2]	D, all compounds	6E4	2E5	8E-5	3E-7	8E-4	8E-3
82	Lead-198	D, all compounds	3E4	6E4	3E-5	9E-8	4E-4	4E-3
82	Lead-199[2]	D, all compounds	2E4	7E4	3E-5	1E-7	3E-4	3E-3
82	Lead-200	D, all compounds	3E3	6E3	3E-6	9E-9	4E-5	4E-4
82	Lead-201	D, all compounds	7E3	2E4	8E-6	3E-8	1E-4	1E-3
82	Lead-202m	D, all compounds	9E3	3E4	1E-5	4E-8	1E-4	1E-3
82	Lead-202	D, all compounds	1E2	5E1	2E-8	7E-11	2E-6	2E-5
82	Lead-203	D, all compounds	5E3	9E3	4E-6	1E-8	7E-5	7E-4
82	Lead-205	D, all compounds	4E3	1E3	6E-7	2E-9	5E-5	5E-4
82	Lead-209	D, all compounds	2E4	6E4	2E-5	8E-8	3E-4	3E-3
82	Lead-210	D, all compounds	6E1	2E1	1E-10	—	—	—
			Bone surf (1E0)	Bone surf (4E-1)	—	6E-13	1E-8	1E-7
82	Lead-211[2]	D, all compounds	1E4	6E2	3E-7	9E-10	2E-4	2E-3
82	Lead-212	D, all compounds	8E1	3E1	1E-8	5E-11	—	—
			Bone surf (1E2)	—	—	—	2E-6	2E-5
82	Lead-214[2]	D, all compounds	9E3	8E2	3E-7	1E-9	1E-4	1E-3
83	Bismuth-200[2]	D, nitrates	3E4	8E4	4E-5	1E-7	4E-4	4E-3

		W, all other compounds	—	1E5	4E-5	1E-7	—	—
83	Bismuth-201[2]	D, see ^{200}Bi	1E4	3E4	1E-5	4E-8	2E-4	2E-3
		W, see ^{200}Bi	—	4E4	2E-5	5E-8	—	—
83	Bismuth-202[2]	D, see ^{200}Bi	1E4	4E4	2E-5	6E-8	2E-4	2E-3
		W, see ^{200}Bi	—	8E4	3E-5	1E-7	—	—
83	Bismuth-203	D, see ^{200}Bi	2E3	7E3	3E-6	9E-9	3E-5	3E-4
		W, see ^{200}Bi	—	6E3	3E-6	9E-9	—	—
83	Bismuth-205	D, see ^{200}Bi	1E3	3E3	1E-6	3E-9	2E-5	2E-4
		W, see ^{200}Bi	—	1E3	5E-7	2E-9	—	—
83	Bismuth-206	D, see ^{200}Bi	6E2	1E3	6E-7	2E-9	9E-6	9E-5
		W, see ^{200}Bi	—	9E2	4E-7	1E-9	—	—
83	Bismuth-207	D, see ^{200}Bi	1E3	2E3	7E-7	2E-9	1E-5	1E-4
		W, see ^{200}Bi	—	4E2	1E-7	5E-10	—	—
83	Bismuth-210m	D, see ^{200}Bi	4E1 Kidneys (6E1)	5E0 Kidneys (6E0)	2E-9	—	—	—
			—		—	9E-12	8E-7	8E-6
		W, see ^{200}Bi	—	7E-1	3E-10	9E-13	—	—
83	Bismuth-210	D, see ^{200}Bi	8E2	2E2 Kidneys (4E2)	1E-7	—	1E-5	1E-4
			—		—	5E-10	—	—
		W, see ^{200}Bi	—	3E1	1E-8	4E-11	—	—
83	Bismuth-212[2]	D, see ^{200}Bi	5E3	2E2	1E-7	3E-10	7E-5	7E-4
		W, see ^{200}Bi	—	3E2	1E-7	4E-10	—	—
83	Bismuth-213[2]	D, see	7E3	3E2	1E-7	4E-10	1E-4	1E-3

		^{200}Bi						
		W, see ^{200}Bi	—	4E2	1E-7	5E-10	—	—
83	Bismuth-214[2]	D, see ^{200}Bi	2E4	8E2	3E-7	1E-9	—	—
			St wall (2E4)	—	—	—	3E-4	3E-3
		W, see ^{200}Bi	—	9E-2	4E-7	1E-9	—	—
84	Polonium-203[2]	D, all compounds except those given for W	3E4	6E4	3E-5	9E-8	3E-4	3E-3
		W, oxides, hydroxides, and nitrates	—	9E4	4E-5	1E-7	—	—
84	Polonium-205[2]	D, see ^{203}Po	2E4	4E4	2E-5	5E-8	3E-4	3E-3
		W, see ^{203}Po	—	7E4	3E-5	1E-7	—	—
84	Polonium-207	D, see ^{203}Po	8E3	3E4	1E-5	3E-8	1E-4	1E-3
		W, see ^{203}Po	—	3E4	1E-5	4E-8	—	—
84	Polonium-210	D, see ^{203}Po	3E0	6E-1	3E-10	9E-13	4E-8	4E-7
		W, see ^{203}Po	—	6E-1	3E-10	9E-13	—	—
85	Astatine-207[2]	D, halides	6E3	3E3	1E-6	4E-9	8E-5	8E-4
		W	—	2E3	9E-7	3E-9	—	—
85	Astatine-211	D, halides	1E2	8E1	3E-8	1E-10	2E-6	2E-5
		W	—	5E1	2E-8	8E-11	—	—
86	Radon-220	With daughters removed	—	2E4	7E-6	2E-8	—	—
		With daughters present	—	2E1	9E-9	3E-11	—	—
				(or 12 working level months		(or 1.0 working level)		

				)				
86	Radon-222	With daughters removed	—	1E4	4E-6	1E-8	—	—
		With daughters present	—	1E2 (or 4 working level months)	3E-8 (or 0.33 working level)	1E-10	—	—
87	Francium-222[2]	D, all compounds	2E3	5E2	2E-7	6E-10	3E-5	3E-4
87	Francium-223[2]	D, all compounds	6E2	8E2	3E-7	1E-9	8E-6	8E-5
88	Radium-223	W, all compounds	5E0	7E1	3E-10	9E-13	—	—
			Bone surf (9E0)	—	—	—	1E-7	1E-6
88	Radium-224	W, all compounds	8E0	2E0	7E-10	2E-12	—	—
			Bone surf (2E1)	—	—	—	2E-7	2E-6
88	Radium-225	W, all compounds	8E0	7E-1	3E-10	9E-13	—	—
			Bone surf (2E1)	—	—	—	2E-7	2E-6
88	Radium-226	W, all compounds	2E0	6E-1	3E-10	9E-13	—	—
			Bone surf (5E0)	—	—	—	6E-8	6E-7
88	Radium-227[2]	W, all compounds	2E4	1E4	6E-6	—	—	—
			Bone surf (2E4)	Bone surf (2E4)	—	3E-8	3E-4	3E-3
88	Radium-228	W, all compounds	2E0	1E0	5E-10	2E-12	—	—
			Bone surf (4E0)	—	—	—	6E-8	6E-7
89	Actinium-224	D, all compounds						
		except those	2E3	3E1	1E-8	—	—	—

		given for W	LLI wall	Bone surf				
		and Y	(2E3)	(4E1)	—	5E-11	3E-5	3E-4
		W, halides and nitrates	—	5E1	2E-8	7E-11	—	—
		Y, oxides and hydroxides	—	5E1	2E-8	6E-11	—	—
89	Actinium-225	D, see ^{224}Ac	5E1	3E-1	1E-10	—	—	—
			LLI wall	Bone surf	—	7E-13	7E-7	7E-6
			(5E1)	(5E-1)				
		W, see ^{224}Ac	—	6E-1	3E-10	9E-13	—	—
		Y, see ^{224}Ac	—	6E-1	3E-10	9E-13	—	—
89	Actinium-226	D, see ^{224}Ac	1E2	3E0	1E-9	—	—	—
			LLI wall	Bone surf	—	5E-12	2E-6	2E-5
			(1E2)	(4E0)				
		W, see ^{224}Ac	—	5E0	2E-9	7E-12	—	—
		Y, see ^{224}Ac	—	5E0	2E-9	6E-12	—	—
89	Actinium-227	D, see ^{224}Ac	2E-1	4E-4	2E-13	—	—	—
			Bone surf	Bone surf	—	1E-15	5E-9	5E-8
			(4E-1)	(8E-4)				
		W, see ^{224}Ac	—	2E-3	7E-13	—	—	—
			—	Bone surf	—	4E-15	—	—
				(3E-3)				
		Y, see ^{224}Ac	—	4E-3	2E-12	6E-15	—	—
89	Actinium-228	D, see ^{224}Ac	2E3	9E0	4E-9	—	3E-5	3E-4
			—	Bone surf	—	2E-11	—	—
				(2E1)				
		W, see ^{224}Ac	—	4E1	2E-8	—	—	—
			—	Bone surf	—	8E-11	—	—
				(6E1)				
		Y, see ^{224}Ac	—	4E1	2E-8	6E-11	—	—
90	Thorium-226[2]	W, all	5E3	2E2	6E-8	2E-10	—	—

		compounds except those given for Y	St wall (5E3)	—	—	—	7E-5	7E-4
		Y, oxides and hydroxides	—	1E2	6E-8	2E-10	—	—
90	Thorium-227	W, see ^{226}Th	1E2	3E-1	1E-10	5E-13	2E-6	2E-5
		Y, see ^{226}Th	—	3E-1	1E-10	5E-13	—	—
90	Thorium-228	W, see ^{226}Th	6E0	1E-2	4E-12	—	—	—
			Bone surf (1E1)	Bone surf (2E-2)	—	3E-14	2E-7	2E-6
		Y, see ^{226}Th	—	2E-2	7E-12	2E-14	—	—
90	Thorium-229	W, see ^{226}Th	6E-1	9E-4	4E-13	—	—	—
			Bone surf (1E0)	Bone surf (2E-3)	—	3E-15	2E-8	2E-7
		Y, see ^{226}Th	—	2E-3	1E-12	—	—	—
			—	Bone surf (3E-3)	—	4E-15	—	—
90	Thorium-230	W, see ^{226}Th	4E0	6E-3	3E-12	—	—	—
			Bone surf (9E0)	Bone surf (2E-2)	—	2E-14	1E-7	1E-6
		Y, see ^{226}Th	—	2E-2	6E-12	—	—	—
			—	Bone surf (2E-2)	—	3E-14	—	—
90	Thorium-231	W, see ^{226}Th	4E3	6E3	3E-6	9E-9	5E-5	5E-4
		Y, see ^{226}Th	—	6E3	3E-6	9E-9	—	—
90	Thorium-232	W, see ^{226}Th	7E-1	1E-3	5E-13	—	—	—
			Bone surf (2E0)	Bone surf (3E-3)	—	4E-15	3E-8	3E-7
		Y, see ^{226}Th	—	3E-3	1E-12	—	—	—
			—	Bone surf (4E-3)	—	6E-15	—	—

90	Thorium-234	W, see ^{226}Th	3E2	2E2	8E-8	3E-10	—	—
			LLI wall (4E2)	—	—	—	5E-6	5E-5
		Y, see ^{226}Th	—	2E2	6E-8	2E-10	—	—
91	Protactinium-227[2]	W, all compounds except those given for Y	4E3	1E2	5E-8	2E-10	5E-5	5E-4
		Y, oxides and hydroxides	—	1E2	4E-8	1E-10	—	—
91	Protactinium-228	W, see ^{227}Pa	1E3	1E1	5E-9	—	2E-5	2E-4
			—	Bone surf (2E1)	—	3E-11	—	—
		Y, see ^{227}Pa	—	1E1	5E-9	2E-11	—	—
91	Protactinium-230	W, see ^{227}Pa	6E2	5E0	2E-9	7E-12	—	—
			Bone surf (9E2)	—	—	—	1E-5	1E-4
		Y, see ^{227}Pa	—	4E0	1E-9	5E-12	—	—
91	Protactinium-231	W, see ^{227}Pa	2E-1	2E-3	6E-13	—	—	—
			Bone surf (5E-1)	Bone surf (4E-3)	—	6E-15	6E-9	6E-8
		Y, see ^{227}Pa	—	4E-3	2E-12	—	—	—
			—	Bone surf (6E-3)	—	8E-15	—	—
91	Protactinium-232	W, see ^{227}Pa	1E3	2E1	9E-9	—	2E-5	2E-4
			—	Bone surf (6E1)	—	8E-11	—	—
		Y, see ^{227}Pa	—	6E1	2E-8	—	—	—
			—	Bone surf (7E1)	—	1E-10	—	—
91	Protactinium-233	W, see ^{227}Pa	1E3	7E2	3E-7	1E-9	—	—
			LLI wall	—	—	—	2E-5	2E-4

			(2E3)					
		Y, see ^{227}Pa	—	6E2	2E-7	8E-10	—	—
91	Protactinium-234	W, see ^{227}Pa	2E3	8E3	3E-6	1E-8	3E-5	3E-4
		Y, see ^{227}Pa	—	7E3	3E-6	9E-9	—	—
92	Uranium-230	D, UF, UOF, UO(NO)	4E0	4E-1	2E-10	—	—	—
			Bone surf (6E0)	Bone surf (6E-1)	—	8E-13	8E-8	8E-7
		W, UO, UF, UC1	—	4E-1	1E-10	5E-13	—	—
		Y, UO, UO	—	3E-1	1E-10	4E-13	—	—
92	Uranium-231	D, see ^{230}U	5E3	8E3	3E-6	1E-8	—	—
			LLI wall (4E3)	—	—	—	6E-5	6E-4
		W, see ^{230}U	—	6E3	2E-6	8E-9	—	—
		Y, see ^{230}U	—	5E3	2E-6	6E-9	—	—
92	Uranium-232	D, see ^{230}U	2E0	2E-1	9E-11	—	—	—
			Bone surf (4E0)	Bone surf (4E-1)	—	6E-13	6E-8	6E-7
		W, see ^{230}U	—	4E-1	2E-10	5E-13	—	—
		Y, see ^{230}U	—	8E-3	3E-12	1E-14	—	—
92	Uranium-233	D, see ^{230}U	1E1	1E0	5E-10	—	—	—
			Bone surf (2E1)	Bone surf (2E0)	—	3E-12	3E-7	3E-6
		W, see ^{230}U	—	7E-1	3E-10	1E-12	—	—
		Y, see ^{230}U	—	4E-2	2E-11	5E-14	—	—
92	Uranium-234[3]	D, see ^{230}U	1E1	1E0	5E-10	—	—	—
			Bone surf (2E1)	Bone surf (2E0)	—	3E-12	3E-7	3E-6
		W, see ^{230}U	—	7E-1	3E-10	1E-12	—	—
		Y, see ^{230}U	—	4E-2	2E-11	5E-14	—	—
92	Uranium-235[3]	D, see ^{230}U	1E1	1E0	6E-10	—	—	—
			Bone	Bone				

			surf (2E1)	surf (2E0)	—	3E-12	3E-7	3E-6
		W, see ^{230}U	—	8E-1	3E-10	1E-12	—	—
		Y, see ^{230}U	—	4E-2	2E-11	6E-14	—	—
92	Uranium-236	D, see ^{230}U	1E1	1E0	5E-10	—	—	—
			Bone surf (2E1)	Bone surf (2E0)	—	3E-12	3E-7	3E-6
		W, see ^{230}U	—	8E-1	3E-10	1E-12	—	—
		Y, see ^{230}U	—	4E-2	2E-11	6E-14	—	—
92	Uranium-237	D, see ^{230}U	2E3	3E3	1E-6	4E-9	—	—
			LLI wall (2E3)	—	—	—	3E-5	3E-4
		W, see ^{230}U	—	2E3	7E-7	2E-9	—	—
		Y, see ^{230}U	—	2E3	6E-7	2E-9	—	—
92	Uranium-238[3]	D, see ^{230}U	1E1	1E0	6E-10	—	—	—
			Bone surf (2E1)	Bone surf (2E0)	—	3E-12	3E-7	3E-6
		W, see ^{230}U	—	8E-1	3E-10	1E-12	—	—
		Y, see ^{230}U	—	4E-2	2E-11	6E-14	—	—
92	Uranium-239[2]	D, see ^{230}U	7E4	2E5	8E-5	3E-7	9E-4	9E-3
		W, see ^{230}U	—	2E5	7E-5	2E-7	—	—
		Y, see ^{230}U	—	2E5	6E-5	2E-7	—	—
92	Uranium-240	D, see ^{230}U	1E3	4E3	2E-6	5E-9	2E-5	2E-4
		W, see ^{230}U	—	3E3	1E-6	4E-9	—	—
		Y, see ^{230}U	—	2E3	1E-6	3E-9	—	—
92	Uranium-natural[3]	D, see ^{230}U	1E1	1E0	5E-10	—	—	—
			—	Bone surf (2E1)	Bone surf (2E0)	3E-12	3E-7	3E-6
		W, see ^{230}U	—	8E-1	3E-10	9E-13	—	—
		Y, see ^{230}U	—	5E-2	2E-11	9E-14	—	—
93	Neptunium-232[2]	W, all compounds	1E5	2E3	7E-7	—	2E-3	2E-2
			—	Bone surf	—	6E-9	—	—

				(5E2)				
93	Neptunium-233[2]	W, all compounds	8E5	3E6	1E-3	4E-6	1E-2	1E-1
93	Neptunium-234	W, all compounds	2E3	3E3	1E-6	4E-9	3E-5	3E-4
93	Neptunium-235	W, all compounds	2E4	8E2	3E-7	—	—	—
			LLI wall (2E4)	Bone surf (1E3)	—	2E-9	3E-4	3E-3
93	Neptunium-236 (1.15E5 y)	W, all compounds	3E0	2E-2	9E-12	—	—	—
			Bone surf (6E0)	Bone surf (5E-2)	—	8E-14	9E-8	9E-7
93	Neptunium-236 (22.5 h)	W, all compounds	3E3	3E1	1E-8	—	—	—
			Bone surf (4E3)	Bone surf (7E1)	—	1E-10	5E-5	5E-4
93	Neptunium-237	W, all compounds	5E-1	4E-3	2E-12	—	—	—
			Bone surf (1E0)	Bone surf (1E-2)	—	1E-14	2E-8	2E-7
93	Neptunium-238	W, all compounds	1E3	6E1	3E-8	—	2E-5	2E-4
			—	Bone surf (2E2)	—	2E-10	—	—
93	Neptunium-239	W, all compounds	2E3	2E3	9E-7	3E-9	—	—
			LLI wall (2E3)	—	—	—	2E-5	2E-4
93	Neptunium-240[2]	W, all compounds	2E4	8E4	3E-5	1E-7	3E-4	3E-3
94	Plutonium-234	W, all compounds except PuO	8E3	2E2	9E-8	3E-10	1E-4	1E-3
		Y, see PuO	—	2E2	8E-8	3E-10	—	—
94	Plutonium-235[2]	W, see ^{234}Pu	9E5	3E6	1E-3	4E-6	1E-2	1E-1
		Y, see ^{234}Pu	—	3E6	1E-3	3E-6	—	—
94	Plutonium-236	W, see ^{234}Pu	2E0	2E-2	8E-12	—	—	—
			Bone surf (4E0)	Bone surf (4E-2)	—	5E-14	6E-8	6E-7
		Y, see ^{234}Pu	—	4E-2	2E-11	6E-14	—	—

94	Plutonium-237	W, see ^{234}Pu	1E4	3E3	1E-6	5E-9	2E-4	2E-3
		Y, see ^{234}Pu	—	3E3	1E-6	4E-9	—	—
94	Plutonium-238	W, see ^{234}Pu	9E-1 Bone surf (2E0)	7E-3 Bone surf (1E-2)	3E-12 —	— 2E-14	— 2E-8	— 2E-7
		Y, see ^{234}Pu	—	2E-2	8E-12	2E-14	—	—
94	Plutonium-239	W, see ^{234}Pu	8E-1 Bone surf (1E0)	6E-3 Bone surf (1E-2)	3E-12 —	— 2E-14	— 2E-8	— 2E-7
		Y, see ^{234}Pu	— —	2E-2 Bone surf (2E-2)	7E-12 —	— 2E-14	— —	— —
94	Plutonium-240	W, see ^{234}Pu	8E-1 Bone surf (1E0)	6E-3 Bone surf (1E-2)	3E-12 —	— 2E-14	— 2E-8	— 2E-7
		Y, see ^{234}Pu	— —	2E-2 Bone surf (2E-2)	7E-12 —	— 2E-14	— —	— —
94	Plutonium-241	W, see ^{234}Pu	4E1 Bone surf (7E1)	3E-1 Bone surf (6E-1)	1E-10 —	— 8E-13	— 1E-6	— 1E-5
		Y, see ^{234}Pu	— —	8E-1 Bone surf (1E0)	3E-10 —	— 1E-12	— —	— —
94	Plutonium-242	W, see ^{234}Pu	8E-1 Bone surf (1E0)	7E-3 Bone surf (1E-2)	3E-12 —	— 2E-14	— 2E-8	— 2E-7
		Y, see ^{234}Pu	— —	2E-2 Bone surf (2E-2)	7E-12 —	— 2E-14	— —	— —
94	Plutonium-243	W, see ^{234}Pu	2E4	4E4	2E-5	5E-8	2E-4	2E-3
		Y, see	—	4E4	2E-5	5E-8	—	—

		^{234}Pu						
94	Plutonium-244	W, see ^{234}Pu	8E-1	7E-3	3E-12	—	—	—
			Bone surf (2E0)	Bone surf (1E-2)	—	2E-14	2E-8	2E-7
		Y, see ^{234}Pu	—	2E-2	7E-12	—	—	—
			—	Bone surf (2E-2)	—	2E-14	—	—
94	Plutonium-245	W, see ^{234}Pu	2E3	5E3	2E-6	6E-9	3E-5	3E-4
		Y, see ^{234}Pu	—	4E3	2E-6	6E-9	—	—
94	Plutonium-246	W, see ^{234}Pu	4E2	3E2	1E-7	4E-10	—	—
			LLI wall (4E2)	—	—	—	6E-6	6E-5
		Y, see ^{234}Pu	—	3E2	1E-7	4E-10	—	—
95	Americium-237[2]	W, all compounds	8E4	3E5	1E-4	4E-7	1E-3	1E-2
95	Americium-238[2]	W, all compounds	4E4	3E3	1E-6	—	5E-4	5E-3
			—	Bone surf (6E3)	—	9E-9	—	—
95	Americium-239	W, all compounds	5E3	1E4	5E-6	2E-8	7E-5	7E-4
95	Americium-240	W, all compounds	2E3	3E3	1E-6	4E-9	3E-5	3E-4
95	Americium-241	W, all compounds	8E-1	6E-3	3E-12	—	—	—
			Bone surf (1E0)	Bone surf (1E-2)	—	2E-14	2E-8	2E-7
95	Americium-242m	W, all compounds	8E-1	6E-3	3E-12	—	—	—
			Bone surf (1E0)	Bone surf (1E-2)	—	2E-14	2E-8	2E-7
95	Americium-242	W, all compounds	4E3	8E1	4E-8	—	5E-5	5E-4
			—	Bone surf (9E1)	—	1E-10	—	—
95	Americium-243	W, all compounds	8E-1	6E-3	3E-12	—	—	—
			Bone surf (1E0)	Bone surf (1E-2)	—	2E-14	2E-8	2E-7

95	Americium-244m[2]	W, all compounds	6E4 St wall (8E4)	4E3 Bone surf (7E3)	2E-6 —	— 1E-8	— 1E-3	— 1E-2
95	Americium-244	W, all compounds	3E3 —	2E2 Bone surf (3E2)	8E-8 —	— 4E-10	4E-5 —	4E-4 —
95	Americium-245	W, all compounds	3E4	8E4	3E-5	1E-7	4E-4	4E-3
95	Americium-246m[2]	W, all compounds	5E4 St wall (6E4)	2E5 —	8E-5 —	3E-7 —	— 8E-4	— 8E-3
95	Americium-246[2]	W, all compounds	3E4	1E5	4E-5	1E-7	4E-4	4E-3
96	Curium-238	W, all compounds	2E4	1E3	5E-7	2E-9	2E-4	2E-3
96	Curium-240	W, all compounds	6E1 Bone surf (8E1)	6E-1 Bone surf (6E-1)	2E-10 —	— 9E-13	— 1E-6	— 1E-5
96	Curium-241	W, all compounds	1E3 —	3E1 Bone surf (4E1)	1E-8 —	— 5E-11	2E-5 —	2E-4 —
96	Curium-242	W, all compounds	3E1 Bone surf (5E1)	3E-1 Bone surf (3E-1)	1E-10 —	— 4E-13	— 7E-7	— 7E-6
96	Curium-243	W, all compounds	1E0 Bone surf (2E0)	9E-3 Bone surf (2E-2)	4E-12 —	— 2E-14	— 3E-8	— 3E-7
96	Curium-244	W, all compounds	1E0 Bone surf (3E0)	1E-2 Bone surf (2E-2)	5E-12 —	— 3E-14	— 3E-8	— 3E-7
96	Curium-245	W, all compounds	7E-1 Bone surf (1E0)	6E-3 Bone surf (1E-2)	3E-12 —	— 2E-14	— 2E-8	— 2E-7
96	Curium-246	W, all compounds	7E-1 Bone surf (1E0)	6E-3 Bone surf (1E-2)	3E-12 —	— 2E-14	— 2E-8	— 2E-7

96	Curium-247	W, all compounds	8E-1	6E-3	3E-12	—	—	—
			Bone surf (1E0)	Bone surf (1E-2)	—	2E-14	2E-8	2E-7
96	Curium-248	W, all compounds	2E-1	2E-3	7E-13	—	—	—
			Bone surf (4E-1)	Bone surf (3E-3)	—	4E-15	5E-9	5E-8
96	Curium-249[2]	W, all compounds	5E4	2E4	7E-6	—	7E-4	7E-3
			—	Bone surf (3E4)	—	4E-8	—	—
96	Curium-250	W, all compounds	4E-2	3E-4	1E-13	—	—	—
			Bone surf (6E-2)	Bone surf (5E-4)	—	8E-16	9E-10	9E-9
97	Berkelium-245	W, all compounds	2E3	1E3	5E-7	2E-9	3E-5	3E-4
97	Berkelium-246	W, all compounds	3E3	3E3	1E-6	4E-9	4E-5	4E-4
97	Berkelium-247	W, all compounds	5E-1	4E-3	2E-12	—	—	—
			Bone surf (1E0)	Bone surf (9E-3)	—	1E-14	2E-8	2E-7
97	Berkelium-249	W, all compounds	2E2	2E0	7E-10	—	—	—
			Bone surf (5E2)	Bone surf (4E0)	—	5E-12	6E-6	6E-5
97	Berkelium-250	W, all compounds	9E3	3E2	1E-7	—	1E-4	1E-3
			—	Bone surf (7E2)	—	1E-9	—	—
98	Californium-244[2]	W, all compounds except those given for Y	3E4	6E2	2E-7	8E-10	—	—
			St wall (3E4)	—	—	—	4E-4	4E-3
		Y, oxides and hydroxides	—	6E2	2E-7	8E-10	—	—
98	Californium-246	W, see ^{244}Cf	4E2	9E0	4E-9	1E-11	5E-6	5E-5
		Y, see ^{244}Cf	—	9E0	4E-9	1E-11	—	—
98	Californium-	W, see	8E0	6E-2	3E-11	—	—	—

	248	^{244}Cf	Bone surf (2E1)	Bone surf (1E-1)	—	2E-13	2E-7	2E-6
		Y, see ^{244}Cf	—	1E-1	4E-11	1E-13	—	—
98	Californium-249	W, see ^{244}Cf	5E-1	4E-3	2E-12	—	—	—
			Bone surf (1E0)	Bone surf (9E-3)	—	1E-14	2E-8	2E-7
		Y, see ^{244}Cf	—	1E-2	4E-12	—	—	—
			—	Bone surf (1E-2)	—	2E-14	—	—
98	Californium-250	W, see ^{244}Cf	1E0	9E-3	4E-12	—	—	—
			Bone surf (2E0)	Bone surf (2E-2)	—	3E-14	3E-8	3E-7
		Y, see ^{244}Cf	—	3E-2	1E-11	4E-14	—	—
98	Californium-251	W, see ^{244}Cf	5E-1	4E-3	2E-12	—	—	—
			Bone surf (1E0)	Bone surf (9E-3)	—	1E-14	2E-8	2E-7
		Y, see ^{244}Cf	—	1E-2	4E-12	—	—	—
			—	Bone surf (1E-2)	—	2E-14	—	—
98	Californium-252	W, see ^{244}Cf	2E0	2E-2	8E-12	—	—	—
			Bone surf (5E0)	Bone surf (4E-2)	—	5E-14	7E-8	7E-7
		Y, see ^{244}Cf	—	3E-2	1E-11	5E-14	—	—
98	Californium-253	W, see ^{244}Cf	2E2	2E0	8E-10	3E-12	—	—
			Bone surf (4E2)	—	—	—	5E-6	5E-5
		Y, see ^{244}Cf	—	2E0	7E-10	2E-12	—	—
98	Californium-254	W, see ^{244}Cf	2E0	2E-2	9E-12	3E-14	3E-8	3E-7
		Y, see ^{244}Cf	—	2E-2	7E-12	2E-14	—	—
99	Einsteinium-250	W, all compounds	4E4	5E2 Bone	2E-7	—	6E-4	6E-3

			—	surf (1E3)	—	2E-9	—	—
99	Einsteinium-251	W, all compounds	7E3	9E2 Bone	4E-7	—	1E-4	1E-3
			—	surf (1E3)	—	2E-9	—	—
99	Einsteinium-253	W, all compounds	2E2	1E0	6E-10	2E-12	2E-6	2E-5
99	Einsteinium-254m	W, all compounds	3E2 LLI	1E1	4E-9	1E-11	—	—
			wall (3E2)	—	—	—	4E-6	4E-5
99	Einsteinium-254	W, all compounds	8E0 Bone	7E-2 Bone	3E-11	—	—	—
			surf (2E1)	surf (1E-1)	—	2E-13	2E-7	2E-6
100	Fermium-252	W, all compounds	5E2	1E1	5E-9	2E-11	6E-6	6E-5
100	Fermium-253	W, all compounds	1E3	1E1	4E-9	1E-11	1E-5	1E-4
100	Fermium-254	W, all compounds	3E3	9E1	4E-8	1E-10	4E-5	4E-4
100	Fermium-255	W, all compounds	5E2	2E1	9E-9	3E-11	7E-6	7E-5
100	Fermium-257	W, all compounds	2E1 Bone	2E-1 Bone	7E-11	—	—	—
			surf (4E1)	surf (2E-1)	—	3E-13	5E-7	5E-6
101	Mendelevium-257	W, all compounds	7E3	8E1 Bone	4E-8	—	1E-4	1E-3
			—	surf (9E1)	—	1E-10	—	—
101	Mendelevium-258	W, all compounds	3E1 Bone	2E-1 Bone	1E-10	—	—	—
			surf (5E1)	surf (3E-1)	—	5E-13	6E-7	6E-6
—	Any single radionuclide not listed above with decay mode other than alpha emission or spontaneous fission and with radioactive half-life less than 2 hours Submersion[1]		—	2E2	1E-7	1E-9	—	—
—	Any single radionuclide		—	2E-1	1E-10	1E-12	1E-8	1E-7

	not listed above with decay mode other than alpha emission or spontaneous fission and with radioactive half-life greater than 2 hours						
—	Any single radionuclide not listed above that decays by alpha emission or spontaneous fission, or any mixture for which either the identity or the concentration of any radionuclide in the mixture is not known	—	4E-4	2E-13	1E-15	2E-9	2E-8

Footnotes:

[1] "Submersion" means that values given are for submersion in a hemispherical semi-infinite cloud of airborne material.

[2] These radionuclides have radiological half-lives of less than 2 hours. The total effective dose equivalent received during operations with these radionuclides might include a significant contribution from external exposure. The DAC values for all radionuclides, other than those designated Class "Submersion," are based upon the committed effective dose equivalent due to the intake of the radionuclide into the body and do NOT include potentially significant contributions to dose equivalent from external exposures. The licensee may substitute 1E-7 mCi/ml for the listed DAC to account for the submersion dose prospectively, but should use individual monitoring devices or other radiation measuring instruments that measure external exposure to demonstrate compliance with the limits. See §175.03(c)(3).

[3] For soluble mixtures of U-238, U-234, and U-235 in air, chemical toxicity may be the limiting factor (see §175.03(c)(1)(v)). If the percent by weight (enrichment) of U-235 is not greater than 5, the concentration value for a 40-hour workweek is 0.2 milligrams uranium per cubic meter of air average. For any enrichment, the product of the average concentration and time of exposure during a 40-hour workweek shall not exceed 8E-3 (SA) mCi-hr/ml, where SA is the specific activity of the uranium inhaled. The specific activity for natural uranium is 6.77E-7 curies per gram U. The specific activity for other mixtures of U-238, U-235, and U-234, if not known, shall be:

SA = 3.6E-7 curies/gram U U-depleted
SA = [0.4 0.38 (enrichment) 0.0034 (enrichment)^2] E-6, enrichment > 0.72

where enrichment is the percentage by weight of U-235, expressed as percent.

Notes:

1. If the identity of each radionuclide in a mixture is known but the concentration of one or more of the radionuclides in the mixture is not known, the DAC for the mixture shall be the most restrictive DAC of any radionuclide in the mixture.

2. If the identity of each radionuclide in the mixture is not known, but it is known that certain radionuclides specified in this appendix are not present in the mixture, the inhalation ALI, DAC, and effluent and sewage concentrations for the mixture are the lowest values specified in this appendix for any radionuclide that is not known to be absent from the mixture; or

Table 1 Occupational Exposures			Table 2 Effluent Concentrations		Table 3 Concentration for Releases to Sewerage	
Col. 1	Col. 2		Col. 3		Col. 1	Col. 2
Atomic No.	Radionuclide	Class	Oral Ingestion	DAC (mCi/ml)	Air (mCi/ml)	Water (mCi/ml)	Monthly Average Concentration (mCi/ml)
			Inhalation				
If it is known that Ac-227-D and Cm-250-W are not present			— 7E-4	3E-13	—	—	—
If, in addition, it is known that Ac-227-W, Y, Th-229-W, Y, Th-230-W, Th-232-W, Y, Pa-231-W, Y, Np-237-W, Pu-239-W, Pu-240-W, Pu-242-W, Am-241-W, Am-242m-W, Am-243-W, Cm-245-W, Cm-246-W, Cm-247-W, Cm-248-W, Bk-247-W, Cf-249-W, and Cf-251-W are not present			— 7E-3	3E-12	—	—	—
If, in addition, it is known that Sm-146-W, Sm-147-W, Gd-148-D, W, Gd-152-D, W, Th-228-W, Y, Th-230-			— 7E-2	3E-11	—	—	—

Y, U-232-Y, U-233-Y, U-234-Y, U-235-Y, U-236-Y, U-238-Y, Np-236-W, Pu-236-W, Y, Pu-238-W, Y, Pu-239-Y, Pu-240-Y, Pu-242-Y, Pu-244-W, Y, Cm-243-W, Cm-244-W, Cf-248-W, Cf-249-Y, Cf-250-W, Y, Cf-251-Y, Cf-252-W, Y, and Cf-254-W, Y are not present						
If, in addition, it is known that Pb-210-D, Bi-210m-W, Po-210-D, W, Ra-223-W, Ra-225-W, Ra-226-W, Ac-225-D, W, Y, Th-227-W, Y, U-230-D, W, Y, U-232-D, W, Pu-241-W, Cm-240-W, Cm-242-W, Cf-248-Y, Es-254-W, Fm-257-W, and Md-258-W are not present	—	7E-1	3E-10	—	—	—
If, in addition, it is known that Si-32-Y, Ti-44-Y, Fe-60-D, Sr-90-Y, Zr-93-D, Cd-113m-D, Cd-113-D, In-115-D, W, La-138-D, Lu-176-W, Hf-178m-D, W, Hf-182-D, W, Bi-210m-D, Ra-224-W, Ra-228-W, Ac-226-D, W, Y, Pa-230-W, Y, U-233-D, W, U-234-D, W, U-235-D, W, U-236-D, W, U-238-D, W, Pu-241-Y, Bk-249-W, Cf-253-W, Y, and Es-253-W are not present	—	7E0	3E-9	—	—	—
If it is known that Ac-227-D, W, Y, Th-229-W, Y, Th-232-W, Y, Pa-231-W, Y, Cm-248-W, and, Cm-250-W are not present	—	—	—	1E-14	—	—
If, in addition, it is known that Sm-146-W, Gd-148-D, W, Gd-152-D, Th-228-W, Y, Th-230-W, Y, U-232-Y, U-233-Y, U-234-Y, U-235-Y, U-236-Y, U-238-Y, U-	—	—	—	1E-13	—	—

Nat-Y, Np-236-W, Np-237-W, Pu-236-W, Y, Pu-238-W, Y, Pu-239-W, Y, Pu-240-W, Y, Pu-242-W, Y, Pu-244-W, Y, Am-241-W, Am-242m-W, Am-243-W, Cm-243-W, Cm-244-W, Cm-245-W, Cm-246-W, Cm-247-W, Bk-247-W, Cf-249-W, Y, Cf-250-W, Y, Cf-251-W, Y, Cf-252-W, Y, and Cf-254-W, Y are not present						
If, in addition, it is known that Sm-147-W, Gd-152-W, Pb-210-D, Bi-210m-W, Po-210-D, W, Ra-223-W, Ra-225-W, Ra-226-W, Ac-225-D, W, Y, Th-227-W, Y, U-230-D, W, Y, U-232-D, W, U-Nat-W, Pu-241-W, Cm-240-W, Cm-242-W, Cf-248-W, Y, Es-254-W, Fm-257-W, and Md-258-W are not present	—	—	—	1E-12	—	—
If, in addition, it is known that Fe-60, Sr-90, Cd-113m, Cd-113, In-115, I-129, Cs-134, Sm-145, Sm-147, Gd-148, Gd-152, Hg-194 (organic), Bi-210m, Ra-223, Ra-224, Ra-225, Ac-225, Th-228, Th-230, U-233, U-234, U-235, U-236, U-238, U-Nat, Cm-242, Cf-248, Es-254, Fm-257, and Md-258 are not present	—	—	—	—	1E-6	1E-5

3. If a mixture of radionuclides consists of uranium and its daughters in ore dust (10 mm AMAD particle distribution assumed) prior to chemical separation of the uranium from the ore, the following values may be used for the DAC of the mixture: 6E-11 mCi of gross alpha activity from uranium-238, uranium-234, thorium-230, and radium-226 per milliliter of air; 3E-11 mCi of natural uranium per milliliter of air; or 45 micrograms of natural uranium per cubic meter of air.

4. If the identity and concentration of each radionuclide in a mixture are known, the limiting values should be derived as follows: determine, for each radionuclide in the mixture, the ratio

between the concentration present in the mixture and the concentration otherwise established in Appendix B for the specific radionuclide when not in a mixture. The sum of such ratios for all of the radionuclides in the mixture may not exceed "1" (i.e., "unity").

Example: If radionuclides "A," "B," and "C" are present in concentrations C_A, C_B, and C_C, and if the applicable DACs are DAC_A, DAC_B, and DAC_C, respectively, then the concentrations shall be limited so that the following relationship exists:

$$\frac{C_A}{DAC_A} + \frac{C_B}{DAC_B} + \frac{C_C}{DAC_C} \# 1$$

§175.04 Notices, instructions and reports to workers; inspections.

(a) *Purpose and scope.* (1) This section establishes requirements for notices, instructions and reports by licensees and registrants to individuals engaged in activities under a license or registration and options available to such individuals in connection with Department inspections of licensees or registrants to ascertain compliance with the provisions of all applicable regulations and conditions stated on the license or registration regarding radiological working conditions. The regulations in this section apply to all persons who receive, possess, produce, use, own or transfer sources of radiation registered with or licensed by the Department or are otherwise subject to this Code.

(b) *Posting of notices to workers.* (1) Each licensee and/or registrant shall post current copies of the following documents:

(i) this Code;

(ii) the radioactive materials license and the conditions or documents incorporated by reference into the license and any amendments thereto;

(iii) the certified registration and the conditions or documents incorporated by reference into the certified registration and any amendments thereto;

(iv) the certificate of registration;

(v) the operating procedures applicable to the work under the license, registration and/or certified registration;

(vi) any notice of violation involving radiological working conditions, any proposed imposition of civil penalty or order issued pursuant to this Code and any response from the licensee and/or registrant.

(2) If posting of a document specified in §175.04(b)(1)(i), (ii), (iii) or (v) is not practicable, the licensee and/or registrant may post a notice which describes the document and states where it may be examined.

(3) A current copy of the "Notice to Employees" prescribed by the Department shall be posted by each licensee and/or registrant wherever individuals work in or frequent any portion of a restricted area.

(4) Documents, notices, or forms posted pursuant to this Code shall appear in a sufficient number of places to permit individuals engaged in work under the license, certified registration and/or registration to observe them on the way to or from any particular work location to which the document applies, shall be conspicuous, and shall be replaced if defaced or altered.

(5) Department documents posted pursuant to §175.04(b)(1)(vi) shall be posted within two (2) working days after receipt of the documents from the Department; the licensee's and/or registrant's response, if any, shall be posted within two (2) working days after dispatch from the licensee and/or registrant. Such documents shall remain posted for a minimum of five (5) working days or until action correcting the violation has been completed, whichever is later.

(c) *Instructions to workers.* (1) All individuals working in or frequenting any portion of a restricted area:

(i) shall be kept informed of the storage, transfer, or use of radioactive material, of radiation producing equipment or of radiation in such portions of the restricted area;

(ii) shall be instructed in the operating procedures applicable to work under the license, registration or certified registration and in the health protection problems associated with exposure to such radioactive material or radiation, in precautions or procedures to minimize exposure, in the purposes and functions of protective devices employed, and shall be required to demonstrate familiarity with such precautions, procedures and devices;

(iii) shall be instructed in, and instructed to observe, to the extent within the worker's control, the applicable provisions of this Code, licenses, certified registrations and registrations for the protection of personnel from exposures to radiation or radioactive material occurring in such areas;

(iv) shall be instructed of their responsibility to report promptly to the licensee and/or registrant any condition which may lead to or cause a violation of this Code, licenses and registrations or unnecessary exposure to radiation or radioactive material;

(v) shall be instructed in the appropriate response to warnings made in the event of any unusual occurrence or malfunction that may involve exposure to radiation or radioactive material; and

(vi) shall be advised as to the radiation exposure reports which workers must be given or may request pursuant to §175.04(d).

(2) The extent of these instructions shall be commensurate with potential radiological health protection problems in the restricted area.

(3) Instruction shall be given before an individual begins work in a restricted area and at least annually thereafter.

(4) Records documenting individual worker instruction shall be maintained for inspection by the Department for a period of three (3) years.

(d) *Notification and reports to workers.* (1) Radiation exposure data for an individual and the results of any measurements, analyses, and calculations of radioactive material deposited or retained in the body of an individual shall be reported to the individual as specified herein. The information reported shall include data and results obtained pursuant to this Code or license or certified registration conditions as shown in records maintained by the licensee and/or registrant pursuant to §175.03(k)(9) of this Code. Each notification and report shall:

(i) be in writing;

(ii) include appropriate identifying data such as the name of the licensee and/or registrant, the name of the individual and the individual's social security number;

(iii) include the individual's exposure information; and

(iv) contain the following statement: "This report is furnished to you under the provisions of §175.04 of the New York City Health Code. You should preserve this report for further reference."

(2) Each licensee and/or registrant shall advise each worker annually of the worker's exposure to radiation or radioactive material as shown in records maintained by the licensee and/or registrant pursuant to §175.03(k)(9) of this Code.

(3) Each licensee and/or registrant shall make dose information available to workers as shown in records maintained by the licensee and/or registrant under the provisions of §175.03(k)(9). The licensee shall provide an annual report to each individual monitored under §175.03(f)(2) of the dose received in that monitoring year if:

(i) The individual's occupational dose exceeds 1 mSv (100 mrem) TEDE or 1 mSv (100 mrem) to any individual organ or tissue; or

(ii) The individual engaged or formerly engaged in activities controlled by the licensee or registrant requests his or her annual dose report.

The report shall include the dose record for each year the worker was required to be monitored pursuant to §175.03(f)(2) of this Code, or the equivalent provisions of previous versions of such section of this Code. Such report shall be furnished to the Department within thirty (30) days from the date of the request, or within thirty (30) days after the dose of the individual has been determined by the licensee or registrant, whichever is later. The report shall cover the period of time that the worker's activities involved exposure to sources of radiation and shall include the dates and locations of licensed or registered (including certified registrations) activities.

(4) When a licensee and/or registrant is required pursuant to §175.03(l)(2), §175.03(l)(4) or §175.03(l)(5) to report to the Department any exposure of an identified occupationally exposed individual, or an identified member of the public, to radiation or radioactive material, the licensee and/or registrant shall also provide the individual a report on the exposure data included in the report to the Department.

(5) At the request of a worker who is terminating employment with the licensee and/or registrant in work involving exposure to radiation or radioactive material, during the current year, each licensee and/or registrant shall provide at termination to each such worker, or to the worker's designee, a written report regarding the radiation dose received by that worker from operations of the licensee or registrant during the current year or fraction thereof. If the most recent individual monitoring results are not available at that time, a written estimate of the dose shall be provided together with a clear indication that this is an estimate.

(e) *Presence of representatives of licensees and/or registrants and workers during inspections.* (1) Each licensee and/or registrant shall afford the Department at all reasonable times opportunity to perform an inspection of materials, machines, activities, facilities, premises and records pursuant to this Code.

(2) During an inspection, Department inspectors may consult privately with workers as specified in §175.04(f). The licensee and/or registrant, or that person's representative, may accompany the Department inspectors during other phases of an inspection.

(3) If, at the time of inspection, an individual has been authorized by the workers to represent them during Department inspections, the licensee and/or registrant shall notify the inspectors of such authorization and shall give the workers' representatives an opportunity to accompany the inspectors during the inspection of physical working conditions.

(4) Each workers' representative shall be routinely engaged in work under control of the licensee and/or registrant and shall have received instructions as specified in §175.04(c).

(5) Different representatives of licensees or registrants and workers may accompany the inspectors during different phases of an inspection if there is no resulting interference with the

conduct of the inspection. However, only one workers' representative at a time may accompany the inspectors.

(6) With the approval of the licensee and/or registrant and the workers' representative, an individual who is not routinely engaged in work under control of the licensee and/or registrant, for example a consultant to the licensee and/or registrant or to the workers' representative, shall be afforded the opportunity to accompany inspectors during the inspection of physical working conditions.

(7) Notwithstanding the other provisions of §175.04(e), Department inspectors are authorized to refuse to permit accompaniment by any individual who deliberately interferes with a fair and orderly inspection. With regard to any area containing proprietary information, the workers' representative for that area shall be an individual previously authorized by the licensee and/or registrant to enter that area.

(f) *Consultation with workers during inspections.* (1) Department inspectors may consult privately with workers concerning matters of occupational radiation protection and other matters related to applicable provisions of this Code, licenses, certified registrations and registrations to the extent the inspectors deem necessary for the conduct of an effective and thorough inspection.

(2) During the course of an inspection any worker may bring privately to the attention of the inspectors, either orally or in writing, any past or present condition which the worker has reason to believe may have contributed to or caused any violations of this Code, license condition, certified registration condition or registration, or any unnecessary exposure of any individual to radiation from sources of radiation under the licensee's and/or registrant's control. Any such notices in writing shall comply with the requirements of §175.04(g)(1).

(3) The provisions of §175.04(f)(2) shall not be interpreted as authorization to disregard instructions pursuant to §175.04(c).

(g) *Requests by workers for inspections.* (1) Any worker or representative of workers who believes that a violation of this Code, registration, certified registration or license conditions exists or has occurred in work under a license and/or certificate of registration with regard to radiological working conditions in which the worker is engaged, may request an inspection by giving notice of the alleged violation to the Bureau of Radiological Health. Any such notice shall be in writing, shall set forth the specific grounds for the notice, and shall be signed by the worker or representative of the workers. A copy shall be provided to the licensee and/or registrant by the Bureau of Radiological Health no later than at the time of inspection except that, upon the request of the worker giving such notice, such worker's name and the name of individuals referred to therein shall not appear in such copy or any record published, released, or made available by the Department, except for good cause shown.

(2) If, upon receipt of such notice, the Bureau of Radiological Health determines that the complaint meets the requirements set forth in §175.04(g)(1), and that there are reasonable grounds to believe that the alleged violation exists or has occurred, an inspection shall be made as soon as practicable, to determine if such alleged violation exists or has occurred. Inspections performed pursuant to §175.04(g) need not be limited to matters referred to in the complaint.

(3) No licensee, registrant, or contractor or subcontractor of a licensee or registrant shall discharge or in any manner discriminate against any worker because such worker has filed any complaint or instituted or caused to be instituted any proceeding under this Code or has testified or is about to testify in any such proceeding or because of the exercise by such worker on behalf of such worker or others of any option afforded by this Code.

(h) *Inspections not warranted; informal review.* (1) If the Bureau of Radiological Health determines, with respect to a complaint under §175.04(g), that an inspection is not warranted because there are no reasonable grounds to believe that a violation exists or has occurred, the Bureau of Radiological Health shall notify the complainant in writing of such determination. The complainant may obtain review of such determination by submitting a written statement of position with the Deputy Commissioner for Environmental Health Services, who will provide the licensee and/or registrant with a copy of such statement by certified mail, excluding, at the request of the complainant, the name of the complainant. The licensee or registrant may submit an opposing written statement of position with the Deputy Commissioner of Environmental Health Services who will provide the complainant with a copy of such statement by certified mail.

(2) Upon the request of the complainant, the Deputy Commissioner for Environmental Health Services may hold an informal conference in which the complainant and the licensee and/or registrant may orally present their views. An informal conference may also be held at the request of the licensee and/or registrant, but disclosure of the identity of the complaint will be made only following receipt of written authorization from the complainant. After considering all written or oral views presented, the Deputy Commissioner for Environmental Health Services shall affirm, modify, or reverse the determination of the Bureau of Radiological Health and furnish the complainant and the licensee and/or registrant a written notification of the decision and the reason therefor.

(3) If the Bureau of Radiological Health determines that an inspection is not warranted because the requirements of §175.04(g)(1) have not been met, the complainant shall be notified in writing of such determination. Such determination shall be without prejudice to the filing of a new complaint meeting the requirements of §175.04(g)(1).

§175.05 Fees.

(a) *Inspection fees.* Notwithstanding any other provision of this Code, the Department is authorized to charge the following inspection fees pursuant to Section 225 of the Public Health Law and the regulations promulgated thereunder:

(1) For radiation equipment facilities required to have quality assurance programs pursuant to §175.07 of this Code, the following inspection fees apply:

(i) Annually inspected facilities:

(A) Large hospital (more than 40 tubes) base fee: $1960.00

(B) Medium hospital (21–40 tubes) base fee: $1585.00

(C) Small hospital (1–20 tubes) base fee: $1290.00

(D) Large (more than 2500 examinations per year, excluding mammography) non-hospital base fee: $670.00

(E) Small (less than 2500 examinations per year, excluding mammography) non-hospital base fee: $375.00

(ii) Biennially inspected facilities:

(A) Large (more than 2500 examinations per year) facility base fee: $670.00

(B) Small (less than 2500 examinations per year) facility base fee: $375.00

(iii) For each tube inspected at annually or biennially inspected facilities, the following inspection fees apply in addition to the base fee:

(A) Radiographic: $120.00

(B) Fluoroscopic: $175.00

(C) Mammographic: $295.00

(D) Dental: $60.00

(E) All other: $60.00

(iv) For radiation equipment facilities not required to have quality assurance programs pursuant to §175.07 of this Code, the following inspection fees apply:

(A) First tube: $170.00

(B) Each additional tube: $60.00

(2) For linear accelerator facilities, the following fee applies:

(i) Base fee: $715.00

(3) For facilities licensed to possess and use radioactive materials, the following inspection fees apply:

(i) Specific licenses authorizing teletherapy

(A) Base fee: $320.00

(ii) Specific licenses of limited scope authorizing medical use (except for teletherapy)

(A) Base fee: $610.00

(B) Per site fee: $140.00

(iii) Specific licenses of limited scope authorizing non-human use

(A) Base fee: $385.00

(B) Per site fee: $160.00

(iv) Specific licenses of broad scope authorizing medical use (except for teletherapy)

(A) Base fee: $3515.00

(B) Per site fee: $140.00

(v) Specific license of broad scope authorizing research and development (non-human use)

(A) Base fee: $2450.00

(B) Per site fee: $160.00

(b) *Due date for inspection fees.* (1) Payment for inspection fees is due and payable thirty (30) days from the billing date.

(2) Failure to pay any inspection fee may result in the suspension or revocation of a registration, certified registration or radioactive materials license.

§175.06 Professional practitioners and related provisions.

(a) Nothing in these regulations shall limit any human use of radiation in diagnostic and therapeutic procedures pursuant to sections below, provided that with respect to human use of radioactive materials, such use is in accordance with a specific license issued pursuant to these regulations, or an exemption therefrom, or under a license issued by the New York State Department of Health or the U.S. Nuclear Regulatory Com- mission.

(b) Each professional practitioner who treats or diagnoses any alleged or proven case of radiation illness or radiation injury to any individual, except that which can be expected in the normal course of radiation therapy, shall report to the Commissioner in writing within seven (7) days such treatment or diagnosis, the fact thereof and the full name, address, social security number, and age of such individual.

(c) No person other than a professional practitioner shall direct or order the application of radiation to a human being; nor shall any person other than a professional practitioner, or a person working under the direction, order, or direct supervision of a professional practitioner apply radiation to a human being. Such direction, order to apply, application of, or administration of radiation shall be in the course of the practitioner's professional practice and shall comply with the following:

(1) The provisions of the license or other authorization of the professional practitioner under the Education Law of the State of New York, or any successor law or regulation, and all regulations pertinent thereto, including, but not limited to provisions as to those parts of the human body and those persons which the professional practitioner may diagnose, analyze or treat or to which he may direct or order the application of, or apply, radiation, and provisions as to the type of radiation which the professional practitioner may use and the purpose for which the professional practitioner may use it; and

(2) The applicable provisions of Part 89 of Title 10 of the Codes, Rules and Regulations of the State of New York and Article 35 of the Public Health Law of the State of New York, or any successor law or regulation, relating to the practice of radiologic technology including licensure requirements and the limitations under which radiologic technologists and other persons, other than professional practitioners, may apply x-rays to human beings and all regulations pertinent thereto.

(3) A professional practitioner shall be responsible for the supervision of any radiation employee who administers radiation to human beings to assure that each exposure is given consistent with expected medical benefit and in accordance with any standards or requirements relating to the practice for which he/she is licensed.

(d) A radiologic technologist shall be responsible for complying with the requirements of such technologist's license and the limitations established by the New York State Department of Health, Bureau of Radiologic Technology. Each activity carried out as a radiologic technologist shall be such as to assure the maximum medical benefit with the minimum radiation exposure to patients and employees.

§175.07 Quality assurance programs.

(a) *Purpose and scope.* This section establishes requirements for the use of machine-produced radiation, radioactive materials or the radiation therefrom for diagnostic and therapeutic uses in the healing arts. These requirements and provisions provide for the protection of the public health and safety and are in addition to, and not in substitution for, others in this Code. The requirements of this section apply to all applicants, licensees and registrants subject to this Code.

(b) *Diagnostic facilities.* A quality assurance program is a system of plans, actions, reviews, reports and records, the purpose of which is to ensure that diagnostic facilities achieve consistent high quality imaging and other diagnostic results, while maintaining radiation output and personnel doses within limits prescribed by the Department.

(1) Each radiation installation performing diagnostic x-ray and/or radioactive materials procedures, except dental, podiatric or veterinary facilities, shall implement a quality assurance program including at a minimum:

(i) the adoption of a manual containing written policies and procedures for radiation protection and describing the facility's quality assurance program. Policies and procedures must be consistent with the types of equipment and services provided including, but not limited to, identification of patients, use of gonadal or scoliosis shielding, personnel monitoring, protection of pregnant workers and patients, and holding of patients. The quality assurance manual must describe the various processing, generator and systems quality control tests appropriate for the types of equipment and services provided in sufficient detail to ensure that they will be performed properly;

(ii) the performance of quality control tests and the correction of deficiencies as specified in the quality assurance manual;

(iii) the maintenance of equipment records for each diagnostic imaging system, containing test results, records of equipment repairs and other pertinent information;

(iv) the provisions of a formalized in-service training program for employees including, but not limited to, quality assurance and radiation safety procedures;

(v) the determination of radiation output at the point of skin entry for common x-ray examinations;

(vi) the measurement of the amount of activity of each dose of a radiopharmaceutical/radiobiologic administered to each patient;

(vii) the calculated absorbed dose for diagnostic procedures involving radioactive materials;

(viii) the provision of the information described in §175.07(b)(1)(v), (vi) and (vii) to any patient upon request;

(ix) the performance of an ongoing program of analysis of repeated, rejected or misadministered diagnostic studies which is designed to identify and correct problems and to optimize quality; and

(x) the performance of an ongoing film processing quality assurance (sensitometry) program, including the use of sensitometry tools (densitometer, sensitometer and thermometer), the determination and plotting of daily sensitometry data, and corrective action when sensitometry values exceed tolerance limits.

(2) Each licensee or registrant shall maintain written records documenting processing quality assurance and audit activities for review by the Department. Such records shall be maintained by the licensee or registrant until after the next scheduled inspection is completed by the Department.

(c) *External beam and brachytherapy*. A quality assurance program for external beam therapy and/or brachytherapy is a system of plans, actions, reviews, reports and records, the purpose of which is to ensure a consistent and safe fulfillment of the dose prescription to the target volume, with minimal dose to normal tissue.

(1) Each licensee or registrant authorized to administer external beam therapy and/or brachytherapy to humans must implement a quality assurance program to systematically monitor, evaluate and document radiation therapy services to ensure consistent and safe fulfillment of the dose prescription to the target volume, with minimal dose to normal tissue, minimal exposure to personnel and adequate patient monitoring aimed at determining the end result of the treatment. Each such licensee or registrant must meet or exceed all quality assurance criteria described in this subdivision.

(2) Each licensee or registrant must adopt and maintain a quality assurance program that includes policies and procedures that require the following:

(i) Each patient's medical record must be complete, accurate, legible and must include the patient's initial clinical evaluation, treatment planning data, treatment execution data, clinical assessments during treatment, a treatment summary and plan for subsequent care. Treatment related data must be recorded in the patient's medical record at the time of each treatment.

(ii) A written and dated order or prescription for the medical use of radiation or radioactive material must be made for each patient in accordance with §175.103(b)(7) of this Code. The order or prescription must be signed or approved electronically by a board certified radiation oncologist or qualified physician who restricts his or her practice to radiation oncology.

(iii) The accuracy of treatment plan data and any modifications to treatment plan data transferred to a radiation treatment delivery system must be verified by qualified clinical staff prior to patient treatment.

(iv) A radiation therapy technologist, physician or other qualified health practitioner must verify that the patient set up on the treatment machine is in accordance with the treatment plan prior to the first fraction of a course of treatment and prior to treatment for any changes to the initial treatment plan.
(v) Clinical staff must obtain clarification before beginning a patient's treatment if any element of the order or other record is confusing, ambiguous, erroneous or suspected of being erroneous.
(vi) Each patient’s identification must be verified by at least two different means by qualified clinical staff prior to each treatment.
(vii) Each patient's response to treatment must be assessed by a board certified radiation oncologist or other qualified physician in the active practice of external beam therapy and/or brachytherapy. Unusual responses must be evaluated as possible indications of treatment errors and recorded in the patient's medical record.
(viii) The medical records of patients undergoing fractionated treatment must be checked for completeness and accuracy by qualified clinical staff at intervals not to exceed six fractions.
(ix) Radiation treatment plans and related calculations must be checked by qualified clinical staff for accuracy before 25 percent of the prescribed dose for external beam therapy or 50 percent of the prescribed dose for brachytherapy is administered, except the check must be performed prior to treatment for: any single fraction treatment; any fractional dose that exceeds 300cGy or 700 monitor units; or when the output of a medical therapy accelerator exceeds 600 monitor units per minute during treatment. If a treatment plan and related calculations were originally prepared by a board certified radiation oncologist or an authorized medical physicist possessing the qualifications specified in §175.64(c)(2) or §175.103(j)(2) of this Code, it may be rechecked by the same individual using a different calculation method. Treatment plans and related calculations prepared by other qualified clinical personnel must be checked by a second qualified person using procedures specified in the registrant's or licensee's treatment planning procedures manual required pursuant to §175.07(c)(2) of this Code, and who has received training in use of this manual.
(x) All equipment and other technology used in planning and administering radiation therapy must function properly and safely, and must be calibrated properly and re-paired and maintained in accordance with the manufacturer's instructions. The equipment and technology that is subject to such quality control includes but is not limited to: computer software and hardware including upgrades and new releases; equipment used to perform simulation; dosimetry equipment; equipment used to guide treatment delivery, including but not limited to ultrasound units, kV and mV imaging equipment and monitors that are used to view patient imaging studies; and personnel radiation safety equipment. Data communication between various systems, including but not limited to treatment planning systems, treatment delivery systems and data networks/storage media, must be evaluated and tested to ensure accurate and complete data transfer.
(xi) Quality control tests performed on equipment and technology used in planning and implementing radiation treatment must be documented, including:
(A) detailed procedures for performing each test;
(B) the frequency of each test;
(C) acceptable results for each test;
(D) corrective actions taken;
(E) record keeping and reporting procedures for test results including the tester’s name, signature and date of the test; and

(F) the qualifications are specified for the individual(s) conducting the test and for the person who reviews test data.
(xii) Test results that exceed tolerances/limits must be immediately reported to the authorized medical physicist.
(xiii) Records for all maintenance, repairs and upgrades of equipment and technology must be maintained for at least five years.
(xiv) Errors or defects in technology or equipment, including computer hardware and software, must be reported to the technology or equipment manufacturer and to the United States Food and Drug Administration (MedWatch) as soon as possible and in no event more than 30 days of discovery, and records of equipment errors and reports required by this clause must be maintained for review by the Department for at least three years.
(xv) External beam therapy equipment calibration/output required by §175.64(g) of this Code. must be verified by an independent means and records of such measurements must be retained for review by the Department for at least three years.
(xvi) Patients with permanent brachytherapy implants must be provided with instructions to take radiation safety precautions, as required by 10 CFR 35.75 and the licensee's radioactive materials license, after being released from the licensee's facility.
(xvii) All personnel involved in planning or implementing radiation therapy must be credentialed. Credentialing must include verifying that all professional staff is appropriately licensed, including medical physicists and radiation therapy technologists. Records of credentialing must be maintained during the period in which the credentialed person provides services to the licensee or registrant and for three years thereafter.
(xvii) Any unintended deviation from the treatment plan that is identified must be evaluated and corrective action to prevent recurrence must be implemented. Records of unintended deviations and corrective action must be maintained for audits required by paragraph (4) of this subdivision and for review by the Department.
(xviii) There must be a process to ensure quick and effective response to any radiation therapy related recalls, notices, safety alerts and hazards.
(3) Each licensee or registrant must adopt and maintain a radiation treatment manual prepared by an authorized medical physicist possessing the qualifications specified in §175.64(c)(2) or §175.103(j)(2) of this Code. The manual must include the calculation methods and formulas to be used at the facility (including the methods for per-forming the checks of treatment plans and related calculations as required in paragraph (1) of this subdivision). The treatment planning manual may be part of the quality assurance manual required by §175.07(c)(1) of this Code. The radiation treatment manual must be included in training given pursuant to §175.04(c) of this Code to facility staff who will participate in treatment planning. Each licensee or registrant must ensure that an authorized medical physicist possessing the qualifications specified in paragraph §175.64(c)(2) or §175.103(j)(2) of this Code prepares or reviews and approves a procedures manual describing how radiation therapy treatment planning is to be performed at the licensee's or registrant's facility and reviews the treatment planning manual at least annually.
(4) Each licensee or registrant must ensure that all equipment used in planning and administering radiation therapy is functioning properly, designed for the intended purpose, properly calibrated, and maintained in accordance with the manufacturer's instructions and the quality assurance program described in the licensee or registrant's quality assurance manual. Such equipment must be calibrated prior to use on patients, at least annually thereafter and following any change, repair or replacement of any component which may alter the radiation output.

(5) Each licensee or registrant must implement written procedures for auditing the effectiveness of the radiation therapy quality assurance program that include the following:
(i) Audits must be conducted at intervals not to exceed twelve (12) months by an authorized medical physicist possessing the qualifications specified in §175.64(c)(2) or §175.103(j)(2) of this Code, and also by a physician, both of whom are in the active practice of the type of radiation therapy conducted by the licensee or registrant. These must be individuals who are not involved in the therapy program being audited; and
(ii) The licensee or registrant must ensure that the individuals who conduct the audit prepare and deliver to the licensee or registrant a report which contains an assessment of the effectiveness of the quality assurance program and makes recommendations for any needed modifications or improvements.
(iii) The licensee or registrant must promptly review the audit findings, address the need for modifications or improvements, and document actions taken. If recommendations are not acted on, the licensee or registrant must document the reasons therefor and also any alternative actions taken to address the audit findings.
(iv) Each licensee or registrant must maintain complete written records relating to quality assurance and audit activities for review and inspection by the Department. Audit records must be maintained for at least six (6) years.
(6) Accreditation in Radiation Oncology.
(i) Ninety (90) days from the effective date of this rule, each registrant or licensee must have an active application with, or be accredited in radiation oncology by, the American College of Radiology, the American College of Radiation Oncology or another accrediting organization that is equivalent as determined by the Department.
(ii) Eighteen (18) months from the effective date of this rule, each registrant and licensee must maintain accreditation in radiation oncology by the American College of Radiology, the American College of Radiation Oncology or another accrediting organization that is equivalent as determined by the Department.
(iii) The registrant or licensee must maintain a record of accreditation, including a copy of the application, all supplemental application information and all correspondence transmitted between the accrediting body and the registrant or licensee. Records must be maintained for at least 6 years.
(d) *Unsealed byproduct material for which a written directive is required.* A quality assurance program for unsealed byproduct material for which a written directive is required is a system of plans, actions, reviews, reports and records, the purpose of which is to ensure a consistent and safe fulfillment of the dose prescription.
(1) Each licensee who uses unsealed byproduct material for which a written directive is required in humans shall implement a quality assurance program which includes at a minimum:
(i) the adoption of a manual containing written policies and procedures designed to assure effective supervision, safety, proper performance of equipment, effective communication and quality control. These must include procedures to assure that:
(A) each patient's evaluation and intended treatment is documented in the patient's record;
(B) a written, signed and dated order for medical use of radioactive material is made in accordance with §175.06 of this Code;
(C) each patient is positively identified;
(D) all orders and other treatment records are clear and legible;

(E) staff will be instructed to obtain clarification before treating a patient if any element of the order or other record is confusing, ambiguous or suspected of being erroneous;

(F) each patient's response to treatment is assessed by an authorized user physician, or a physician under the supervision of an authorized user physician, for unsealed byproduct material for which a written directive is required and that unusual responses are evaluated as possible indications of treatment errors; and

(G) complete treatment records containing data recorded at the time of each treatment are maintained.

(2) Each licensee shall ensure that all equipment used in planning and administering unsealed byproduct material for which a written directive is required is designed and used for the intended purpose and is properly functioning, is properly calibrated and is maintained in accordance with the manufacturer's instructions and the quality assurance program described in the licensee's or registrant's quality assurance manual.

(3) Each licensee shall audit the unsealed byproduct material for which a written directive is required quality assurance program at intervals not to exceed twelve (12) months to assess the effectiveness of the program, document the audit and any modifications or improvements found to be needed and institute corrective actions and improvements as indicated by the audit findings.

Radiation Equipment

§175.51 Registration and inspection of installations with radiation equipment; other permitted activities.

(a) *Applicability.* The provisions of this section apply to all radiation installations using any radiation equipment, and to those persons who sell, assemble and install such equipment as applicable. However, those facilities possessing equipment subject to the requirements of §175.64(b) of this Code are required to obtain a certified registration for that equipment. If such facility has additional radiation equipment not subject to the requirements of §175.64(b) of this Code, such equipment shall be registered pursuant to this section.

(b) *Registration required.* (1) Prior to establishing, maintaining or operating any radiation installation at which is located any radiation equipment in operable condition, or prior to installing such equipment which is intended to be used, the owner or operator of such installation shall have obtained a current certificate of registration or, for a therapeutic radiation machine subject to the requirements of §175.64(b) of this Code, a certified registration from the Department. This shall not prohibit the installation of radiation-producing equipment by a registrant at a facility solely for testing purposes by medical physicists.

(2) For professional practitioners in private practice, registrations shall not be issued to anyone other than natural persons who shall be responsible for the use and operation of the equipment and shall be liable for violations of the conditions of the registration or the provisions of this Code.

(c) Application for a certificate of registration as described in §175.51(b)(1) of this Code shall be made to the Department on a written form and in a manner prescribed by the Department.

(d) Facilities at which either the operator or location will be changed shall apply for a new registration at least thirty (30) days prior to such change.

(1) Facilities without a current certificate of registration shall apply as follows:

No registrant shall apply x-rays to treat or diagnose any patient's medical condition at a facility that does not possess a current, non-expired Certificate of Registration from the Department.

(i) All new facilities possessing radiation-producing equipment, excluding dental, podiatric, and veterinary facilities, shall apply for a certificate of registration at least thirty (30) days prior to the `expected start date' for clinical operation of the facility.

(ii) The applicant for registration shall submit the following information:

(A) a completed application form; and

(B) a medical physicist report detailing the results of initial quality control tests conducted on all radiation-producing equipment in the facility. In this context, the initial quality control tests shall be the sum of all quality control tests mandated to be conducted for the facility type at daily, weekly, monthly, semiannual, annual and biennial frequencies. In addition, a radiation protection survey shall be conducted for each room housing a radiographic unit. In this context, a medical physicist shall be an individual possessing a current, non-expired CRESO certification in New York State, or a license to practice the specialty of diagnostic medical physics in New York State.

(iii) The Department has the right to refuse to grant a facility's registration until such time as the facility's physicist report contains all quality control mandated tests as submitted by an individual licensed in New York State or possessing a CRESO certification in New York State.

(iv) Upon completion of the review process for the submitted quality control tests by the facility, if reasons exist to refuse authorization to register the facility's radiation-producing equipment for clinical usage, the facility shall be notified of the reasons for such a decision by the Department in writing.

(2) All new dental, podiatric, and veterinary facilities without a current certificate of registration shall apply for a new registration at least thirty (30) days before establishing the installation and/or installing the x-ray equipment. All new dental, podiatric, and veterinary facilities shall be prohibited from commencing diagnostic clinical examinations until such time that the facility has complied with items (i) and (ii) below:

(i) New facilities shall file a completed application form with the Department; and

(ii) Prior to any clinical usage of radiation-producing equipment, all such new facilities shall be inspected by the Department and shall correct all deficiencies noted at the time of such inspection.

(iii) The Department shall have the right to refuse to issue a certificate of registration to any facility that refuses to allow the Department to conduct an inspection of all of the facility's x-ray equipment and/or refuses to correct any violations of the Health Code noted during the inspection provided for in subparagraph (ii).

(e) *Renewal registrations.* Facilities with current, valid certificates of registration shall apply for renewal at least thirty (30) days prior to the expiration of such certificate of registration unless such certificate of registration is revoked or unless the installation is discontinued on or before the expiration of the certificate of registration.

(f) Fees for each registration shall be paid pursuant to §5.09(j). For certified registrations, fees shall be paid pursuant to §175.05.

(g) *Suspension and revocation of registrations.* (1) A registration may be denied, suspended or revoked pursuant to §5.17 of this Code or if the Commissioner finds that:

(i) the information submitted in the application is incorrect or incomplete; or

(ii) the installation is, has been or will be established, maintained, or operated in violation of this Code or any other applicable law, rule, regulation, or order; or

(iii) the certificate of registration has not been issued correctly; or

(iv) the fees for registration have not been paid as required.

(h) A certificate of registration shall be issued for a limited period of time extending from the date of issuance to the date of expiration as specified on the certificate of registration. The length of such period of time shall not exceed two years except that the Department may issue a certificate of registration for a longer period of time in order to stagger expiration dates for administrative purposes and may charge a proportionate increase in fees therefor.

(i) *Expiration of registrations.* (1) The registration issued for a radiation installation to the operator thereof shall expire and may be required to be surrendered to the Department upon:

(i) the expiration date specified on the certificate of registration; or

(ii) revocation by the Commissioner; or

(iii) a change of the person to whom the certificate of registration is issued; or

(iv) a change in address of the radiation installation if it is not a mobile unit; or

(v) a change in the name of the installation; or

(vi) the discontinuance of the installation.

(j) A certificate of registration shall not be transferable or assignable.

(k) A certificate of registration issued for a radiation installation shall be posted in accordance with the provisions of §5.15 of this Code.

(l) The registration shall not imply endorsement or approval by the Department and shall not be used to advertise or promote business.

(m) The operator of a radiation installation shall keep correct registration by reporting to the Department within ten (10) days any change affecting such information.

(n) *Inspections.* (1) Any radiation installation subject to the registration requirements of this section or the certified registration requirements of §175.64 of this Code shall be inspected periodically to assure compliance with the provisions of this Code and the maintenance of radiation exposures as far below the limits set forth in this Code as practicable.

(2) Except as otherwise provided in §175.51(n)(3), such inspections shall be made at a frequency specified herein, with the first inspection to be made at the time of the beginning of operation.

(A) Hospitals, clinics, radiologists and any other type of facility as specified by the Department shall be inspected annually.

(B) Dental, podiatric, veterinary installations shall be inspected triennially.

(C) All other facilities shall be inspected biennially.

(D) Reinspections or other appropriate follow-up activities shall be made at intervals of sixty (60) days or less to ensure correction of any violation found during an initial inspection and remaining uncorrected at the conclusion thereof.

(E) The inspections shall be made by the Department or, as the Department shall direct for dental and podiatric installations, by Certified Radiation Equipment Safety Officers approved by the Department, to use the New York City Health Code, including Article 175 thereof, for compliance purposes.

(i) Certified Radiation Equipment Safety Officers shall furnish an inspection report, in a form prescribed by the Department, signed by the person who made the inspection to the operator of the installation and a copy thereof to the Department in accordance with the instructions of the prescribed form.

(ii) Certified Radiation Equipment Safety Officers shall not charge or propose to charge a fee for an inspection in excess of a fair and reasonable amount as determined by the New York State Department of Health.

(3) The Department may establish inspection frequencies of any installation different from those specified in §175.51(n)(2).

(o) *Other activities requiring a permit.* (1) No person shall engage in the business of selling new or used radiation equipment to, or assembling, installing, or repairing such equipment for, professional practitioners or any other holder of a registration to operate a radiation installation in the City without a permit therefor issued by the Department. Application for such permit shall be made to the Department on a written form in a manner prescribed by the Department and fees paid pursuant to §5.07 of this Code.

(2) Each person who is engaged in the business of selling new or used radiation equipment to, or assembling, installing, or repairing such equipment for professional practitioners or any other person holding a registration to operate a radiation installation in the City shall comply with the reporting requirements in this Code.

(3) Any person who sells, assembles, installs or repairs new or used radiation equipment shall file a report with the Department pursuant to 21 CFR 1020.30(d), or any successor law or regulation, within fifteen (15) days of the completion of the activity.

§175.52 Exemptions of radiation equipment.

(a) The provisions of these regulations shall not apply to:

(1) radiation equipment constructed so that it cannot emit radiation at a level greater than 1.3 E-7 C/kg (0.5 milliroentgen) per hour, measured 5 cm (2 in.) from any accessible surface thereof, and averaged over an area of 10 cm^2 (1.55 in^2) provided, however, that such exemption shall not apply to the testing or servicing of such equipment during its production; or

(2) radiation equipment during its storage, shipment, retail sale or other similar use (but not including installation) during which such equipment is not connected to a voltage source and does not emit radiation, provided however, that such equipment is not exempt from the labeling requirement of §175.56(d).

§175.53 Prohibited uses and activities.

(a) *Prohibited uses.*

(1) Hand-held fluoroscopic screens shall not be used.

(2) Shoe-fitting fluoroscopic devices shall not be used.

(3) Intraoral fluoroscopy in dental examinations shall not be used.

(4) Photofluorographic equipment shall not be used.

(5) Equipment employing bare overhead or uninsulated conductors shall not be used.

(6) Non-image intensified fluoroscopes shall not be used.

(b) *Prohibited activities.* (1) Individuals shall not operate x-ray equipment such that the useful beam is applied to human beings unless such individual is a professional practitioner or is otherwise authorized to operate x-ray equipment pursuant to New York State law.

(2) The sale, lease, transfer or loan of x-ray or fluoroscopic equipment or the supplies appertaining thereto, except to persons engaged in an occupation where such use is permitted or to institutions where such use is permitted, is prohibited. However, this restriction shall not apply to persons intending to use x-ray or fluoroscopic equipment and supplies solely for the application

of radiation to other than human beings, nor to the acquisition of such equipment or supplies by wholesalers, distributors or retailers in the regular course of their trade or business.

(3) No person shall sell, lease, transfer, lend or install any radiation-producing equipment, or the supplies used in connection with such equipment, unless such supplies or equipment when properly placed into operation or properly used will meet the requirements of this Code. A person who undertakes to repair such equipment shall repair the same properly so that when it is placed in operation or properly used after the repair the equipment will meet the requirements of this Code for radiation protection and safety generally.

§175.54 Surveys, shielding requirements and operator protection for diagnostic radiation machines.

(a) When appropriate, the Department may require the applicant for a certificate of registration to utilize the services of a qualified expert in shielding design to determine the shielding requirements prior to installation of radiation equipment. The shielding requirements shall be submitted to the Department for review.

(b) When appropriate, the Department may require that the continuity and adequacy of any protective barriers be verified by a protection survey performed by a qualified expert or a Certified Radiation Equipment Safety Officer. The findings shall be submitted to the Department for review, and shall be maintained by the owner or operator as part of the installation's radiation records and reports. (If the Department finds that the radiation surveys and reports of any qualified expert or Certified Radiation Equipment Safety Officer employed in this City are inadequate to assess radiation exposures, the Department may require the registrants and licensees to have such surveys and reports performed by other qualified experts or Certified Radiation Equipment Safety Officers and may notify the appropriate certifying agency of such action.

(c) *Operator protection.* (1) Fixed radiographic installations (except dental, mobile, portable, podiatric or mammographic systems or spot-film devices as defined in 21 CFR Section 1020.30(b)).

(i) The operator of radiographic equipment shall initiate x-ray exposures from a control console that satisfies the following requirements:

(A) the control console shall be located within a structure so constructed that

(a) radiation has to be scattered at least twice before entering the structure; or

(b) the structure shall be provided with a protective door that is interlocked to prevent an x-ray exposure unless the door is closed and which door shall have sufficient shielding to ensure compliance with the requirements of §175.03; and

(c) any walls of the structure shall be permanently fixed barriers of at least 2.13 m (7 ft) in height and shall provide sufficient shielding to ensure compliance with the requirements of §175.03; and

(B) the operator shall be provided with a viewing system to observe the patient during any exposure and which has been so placed that the operator can view any entry into the radiographic room; and

(C) the operator shall be provided with a means of communication with the patient from the operator's position at the control console; and

(D) the operator shall be allotted unobstructed floor space at the control console; and

(E) for control consoles located in structures without an interlocked door, the x-ray exposure control shall be fixed in the structure and placed at least 1.02 m (40 in.) from any open edge of the structure where radiation may enter.

(2) *Mobile, portable, podiatric and dental radiographic installations, excluding mammographic systems.* (i) Mobile, portable, podiatric and dental x-ray equipment shall be provided with the means to allow an operator to stand at least 2 m (6 ft) from the patient or behind a protective barrier and not in the path of the primary x-ray beam whenever an x-ray exposure is initiated.

(ii) Mobile and portable x-ray systems, excluding dental and podiatric systems, that are used continuously for greater than one week in the same location shall be deemed a fixed radiographic installation and shall meet the operator protection standards of either §175.54(c)(1)(i)(A) or (B).

(iii) Each operator of a mobile or portable radiographic x-ray unit, excluding dental and podiatric units, shall be provided with personnel monitoring as provided in §175.03 and shall wear a protective garment of at least 0.25 mm lead equivalent.

(3) *Mammographic installations.* (i) The operator of the mammographic equipment shall initiate x-ray exposures from the control console of the mammographic equipment such that:

(A) protective shielding is provided for the operator that meets the following criteria: *(a)* the shielding shall be provided to a height of 2m (6 ft) from the floor, with the lower edge not more than 7.5 cm (3 in.) from the floor. Such shielding shall be permanently attached to the mammographic x-ray unit in such a manner that an air gap does not exist between the shield and the mammographic unit or shall be constructed as a permanent operator shield such that the operator is able to stand completely within the shielded area during the exposure; and

(b) the exposure control shall be permanently fixed on the mammographic control console; and

(c) the operator shall be able to communicate with and view the patient from the operator's protected position during the exposure.

(4) The facility must include a written policy and procedure in the quality assurance manual, as required by Section 175.07 (b)(1)(i), that conforms to the manufacturer's recommended care and use policy for lead protective garments and is adhered to on a continuing basis. This policy, at a minimum, must describe the training of Licensed Radiographic Technologists (LRTs) on the proper care and usage of protective garments; how storage sites for lead protective garments will be evaluated and maintained and procedures for how LRTs report lead protective garment problems to the Radiation Safety Officer.

(5) Protective garments that are not used by operators conducting fluoroscopic procedures or not used for protection in veterinary offices for x-ray radiographic procedures on animals must be checked annually for defects such as holes, cracks and tears by using one of the following methods: visual investigation, tactile investigation, or x-ray imaging. If a defect is found, the lead protective garment must be removed from service and either replaced or repaired to conform to the manufacturers' specifications.

(6) Protective garments that are used by operators conducting fluoroscopic procedures or used for protection in veterinary offices for x-ray radiographic procedures on animals must be checked annually for defects such as holes, cracks and tears by using all of the following methods: visual investigation, tactile investigation, and x-ray imaging. If a defect is found, the lead protective garment must be removed from service and either replaced or repaired to conform to the manufacturers' specifications.

§175.55 Compliance with federal standards and precedence thereof.

(a) Whenever any requirement of this Code relating to radiation equipment conflicts with the Federal performance standard (21 CFR 1020.30, or any successor law or regulation) for

diagnostic x-ray systems and/or their major components, the Federal performance standard shall take precedence over and supersede any conflicting requirements of this Code pertaining to radiation equipment.

(b) The operator shall retain, and shall present to the Department for examination when requested, all information provided by the manufacturer to the purchaser in accordance with the requirements of the applicable Federal standard and shall transfer this information to any subsequent owner of the equipment.

§175.56 General requirements for radiation equipment.

(a) In addition to the requirements set forth in this section, all radiation equipment shall meet all applicable specific provisions of the sections of this Code set forth under the heading "Radiation Equipment" and all possession and use thereof shall comply with the requirements set forth in the sections of this Code set forth under the heading "General Provisions" and with any other applicable requirement deemed necessary by the Department.

(b) Radiation equipment which is not intended to be used must be made inoperable to the satisfaction of the Department by dismantling or sealing with an official Department seal or other suitable method, and shall not be unsealed or restored to operable condition without prior authorization by the Department.

(c) All radiation equipment, except equipment used solely in research and development, installed in a radiation installation shall, where applicable, be listed by the Underwriters' Laboratories, Inc., or shall comply with the National Electrical Code of the National Fire Protection Association or an equivalent safety standard.

(d) *Labels.* (1) The control panel for radiation equipment used for diagnostic or therapeutic radiology shall be clearly labeled with the words "CAUTION—THIS EQUIPMENT PRODUCES X-RAYS WHEN ENERGIZED" or other cautionary wording as specified in applicable performance standards established by the United States Department of Health and Human Services, Food and Drug Administration.

(2) Such cautionary labels shall not be used except as required by this Code.

(e) *Equipment accessories.* Film processing materials and techniques shall be those recommended by the x-ray film manufacturer or those otherwise tested to ensure maximum information content of the developed x-ray film and quality control methods shall be employed to ensure optimum results as specified in §175.07 of this Code. X-ray film shall not be used past the manufacturer's expiration date.

(f) *Beam quality—half-value layer.* (1) The half-value layer (HVL) of the useful beam for a given x-ray tube potential shall not be less than the appropriate value shown in Table 1 below under "Specified dental systems" for any dental system designed for use with intraoral image receptors and manufactured after December 1, 1980, and under "Other x-ray systems" for all other x-ray systems subject to this Code. If it is necessary to determine such half-value layer at an x-ray tube potential which is not listed in Table 1, linear interpolation or extrapolation may be made.

(2) Positive means shall be provided to insure that at least the minimum filtration needed to achieve the beam quality requirements specified in §175.56(f)(1) is in the useful beam during each exposure.

Table 1

X-ray tube voltage (kilovolt peak)		Minimum HVL (mm of Al)	
Designed operating range	Measured operating potential	Specified dental systems	Other x-ray systems
Below 50	30		0.3
	40		0.4
	49		0.5
50 to 70	50	1.5	1.2
	60	1.5	1.3
	70	1.5	1.5
Above 70	71	2.1	2.1
	80	2.3	2.3
	90	2.5	2.5
	100	2.7	2.7
	110	3.0	3.0
	120	3.2	3.2
	130	3.5	3.5
	140	3.8	3.8
	150	4.1	4.1

(g) *Radiographic protective tube housings and diaphragm protection.*

(1) All radiographic protective tube housings shall be of the diagnostic type.

(2) All diaphragms, collimators, cones, shutters or other devices used to define the useful beam shall provide the same degree of attenuation as that required of the tube housing.

(h) The tube head shall remain stationary when placed in any exposure position and during the exposure.

(i) *Additional requirements.* In addition to other applicable requirements of this Code, diagnostic x-ray equipment manufactured after August 1, 1974, shall meet the following requirements:

(1) Aluminum equivalent of material between patient and image receptor. The aluminum equivalent of each of the items listed in Table 2 below, which are used between the patient and image receptor, shall not exceed the indicated limits. Compliance shall be determined by x-ray measurements made at a potential of 100 kVp and with an x-ray beam which has a half-value layer of 2.7 mm of aluminum. This requirement is applicable to front panel(s) of cassette holders and film changers provided by the manufacturer for purposes of patient support and/or to prevent foreign object intrusions. It does not apply to such items as a screen and its associated mechanical support panel or grids.

Table 2

Item	Aluminum equivalent (in mm)
Front panel(s) of cassette holder (total of all)	1.0
Front panel(s) of film changer (total of all)	1.0
Stationary tabletop	1.0
Moveable tabletop (including stationary subtop)	1.5
Cradle	2.0

(2) On battery-powered generators, visual means shall be provided on the control panel to indicate whether the battery is in a state of charge adequate for proper operation.

(j) The x-ray equipment, and all related items, including all individual components, whether related to the setting of exposure technique factors, the taking of the x-ray or post-exposure processing of the x-ray film, shall be maintained in proper working order. This includes, but is not limited to, dials, buttons, indicators, switches, controls and meters.

(k) All x-ray producing equipment shall be provided with a light, or other visual indication, which functions whenever x-rays are produced. This indication shall be visible at the operator's protected position.

§175.57 Diagnostic radiography (other than veterinary).

(a) *Applicability.* The provisions of this section apply to equipment for the recording of images.

(b) *Control and indication of technique factors.* (1) *Visual indication.* The technique factors to be used during an exposure shall be indicated before the exposure begins, except when automatic exposure controls are used, in which case the technique factors which are set prior to the exposure shall be indicated. On equipment having fixed technique factors, this requirement may be met by permanent markings. Indication of technique factors shall be visible from the operator's position except in the case of spot films made by the fluoroscopist.

(2) *Timers.* Means shall be provided to terminate the exposure at a preset time interval, a preset product of current and time, a present number of pulses, or a preset radiation exposure to the image receptor.

(i) Except during serial radiography, the operator shall be able to terminate the exposure at any time during an exposure of greater than one-half section. Termination of exposure shall cause automatic resetting of the timer to its initial setting or zero. It shall not be possible to make an exposure when the timer is set to a zero or off position if either position is provided.

(ii) During serial radiography, the operator shall be able to terminate the x-ray exposure(s) at any time, but means may be provided to permit completion of any single exposure of the series in progress.

(3) *Automatic exposure controls.* When an automatic exposure control is provided:

(i) indication shall be made on the control panel when this mode of operation is selected;

(ii) when the x-ray tube potential is equal to or greater than 51 kVp, the minimum exposure time for field emission equipment rated for pulsed operation shall be equal to or less than a time

interval equivalent to two pulses and the minimum exposure time for all other equipment shall be equal to or less than 1/60 second or a time interval required to deliver 5 mAs, whichever is greater;

(iii) either the product of peak x-ray tube potential, current and exposure time shall be limited to not more than 60 kWs per exposure or the product of x-ray tube current and exposure time shall be limited to not more than 600 mAs per exposure except when the x-ray tube potential is less than 51 kVp in which case the product of x-ray tube current and exposure time shall be limited to not more than 2,000 mAs per exposure; and

(iv) a visible signal shall indicate when an exposure has been terminated at the limits described in §175.57(a)(3)(iii) and manual resetting shall be required before further automatically timed exposures can be made.

(c) *Accuracy.* Deviation of technique factors from indicated values shall not exceed the limits given in the information provided by the manufacturer in accordance with applicable Federal standards (21 CFR Part 1020, or any successor law or regulation).

(d) *Reproducibility.* The following requirements shall apply when the equipment is operated on an adequate power supply as specified by the manufacturer in accordance with the requirements of applicable Federal standards (21 CFR Part 1020, or any successor law or regulation):

(1) *Coefficient of variation.* For any specific combination of selected technique factors, the estimated coefficient of variation of radiation exposures shall be no greater than 0.05.

(e) *Linearity.* The following requirements apply when the equipment is operated on a power supply as specified by the manufacturer in accordance with the requirements of applicable Federal standards (21 CFR Part 1020 or any successor law or regulation) for any fixed x-ray tube potential within the range of 40 percent to 100 percent of the maximum rated.

(1) *Equipment having independent selection of x-ray tube current (mA).* The average ratios of exposure to the indicated milliampere-seconds product, C-kg^{-1}/mAs (mR/mAs), obtained at any two consecutive tube current settings shall not differ by more than 0.10 times their sum. This is:

$$' X_1 – X_2 ' \# 0.10 (X_1 X_2)$$

where X_1 and X_2 are the average C-kg^{-1}/mAs (or mR/mAs) values obtained at each of two consecutive tube current settings or at two settings differing by no more than a factor of 2 when the tube current selection is continuous.

(2) Equipment having selection of x-ray tube current-exposure time product (mAs). For equipment manufactured after May 3, 1994, the average ratios of exposure to the indicated milliampere-seconds product, C-kg^{-1}/mAs (mR/mAs), obtained at any two consecutive mAs selector settings shall not differ by more than 0.10 times their sum. This is:

$$' X_1 – X_2 ' \# 0.10 (X_1 X_2)$$

where X_1 and X_2 are the average C-kg^{-1}/mAs (or mR/mAs) values obtained at each of two consecutive mAs selector settings or at two settings differing by no more than a factor of 2 where the mAs selector provides continuous selection.

(f) *Field limitation and alignment for mobile and stationary general purpose x-ray systems.* Except where spot-film devices are used, mobile and stationary general purpose radiographic x-ray systems shall meet the following requirements:

(1) *Variable x-ray field limitation.* A means for stepless adjustment of the size of the x-ray field shall be provided. Each dimension of the minimum field size at an SID of 100 cm shall be equal to or less than 5 cm.

(2) Visual definition:

(i) *Means for visually defining the perimeter of the x-ray field shall be provided.* The total misalignment of the edges of the visually defined field with the respective edges of the x-ray field along either the length or width of the visually defined field shall not exceed 2 percent of the distance from the source of the center of the visually defined field when the surface upon which it appears is perpendicular to the axis of the x-ray beam.

(ii) When a light localizer is used to define the x-ray field, it shall provide an average illuminance of not less than 160 lux (15 footcandles) at 100 cm or at the maximum SID, whichever is less. The average illuminance shall be based upon measurements made in the approximate center of each quadrant of the light field. Radiation therapy simulation systems are exempt from this requirement.

(iii) The edge of the light field at 100 cm or at the maximum SID, whichever is less, shall have a contrast ratio, corrected for ambient lighting, of not less than 4 in the case of beam-limiting devices designed for use on stationary equipment, and a contrast ratio of not less than 3 in case of beam-limiting devices designed for use on mobile equipment. The contrast ratio is defined as I_1/I_2 where I_1 is the illuminance 3 mm from the edge of the light field toward the center of the field and I_2 is the illuminance 3 mm from the edge of the light field away from the center of the field.

(g) *Field indication and alignment on stationary general purpose x-ray equipment.* Except when spot-film devices are used, stationary general purpose x-ray systems shall meet the following requirements in addition to those prescribed in §175.57(e):

(1) Means shall be provided to indicate when the axis of the x-ray beam is perpendicular to the plane of the image receptor, to align the center of the x-ray field with respect to the center of the image receptor to within 2 percent of the SID, and to indicate the SID to within 2 percent;

(2) The beam-limiting device shall numerically indicate the field size in the plane of the image receptor to which it is adjusted;

(3) Indication of field size dimensions and SIDs shall be specified in centimeters and/or inches, and shall be such that aperture adjustments result in x-ray field dimensions in the plane of the image receptor which correspond to those indicated by the beam-limiting device to within 2 percent of the SID when the beam axis is indicated to be perpendicular to the plane of the image receptor; and

(h) *Field limitation on radiographic x-ray equipment other than general purpose radiographic systems.* (1) X-ray systems designed for one image receptor size. Radiographic equipment designed for only one image receptor size at a fixed SID shall be provided with means to limit the field at the plane of the image receptor to dimensions no greater than those of the image receptor, and to align the center of the x-ray field with the center of the image receptor to within 2 percent of the SID or shall be provided with means to both size and align the x-ray field such that the x-ray field at the plane of the image receptor does not extend beyond any edge of the image receptor.

(2) *Other x-ray systems.* Radiographic systems not specifically covered in §175.57(f), (g), (h)(1), and (j) and systems covered in §175.58(b), which are also designed for use with extraoral image receptors and when used with an extraoral image receptor, shall be provided with means to limit the x-ray field in the plane of the image receptor so that such field does not exceed each dimension of the image receptor by more than 2 percent of the SID, when the axis of the x-ray

beam is perpendicular to the plane of the image receptor. In addition, means shall be provided to align the center of the x-ray field such that the x-ray field at the plane of the image receptor does not extend beyond any edge of the image receptor. These requirements may be met with:

(i) a system which performs in accordance with §175.57(f) and (g); or, when alignment means are also provided, may be met with either:

(ii) an assortment of removable fixed-aperture, beam-limiting devices sufficient to meet the requirement for each combination of image receptor size and SID for which the unit is designed. Each such device shall have clear and permanent markings to indicate the image receptor size and SID for which it is designed; or

(iii) a beam-limiting device having multiple fixed apertures sufficient to meet the requirement for each combination of image receptor size and SID for which the unit is designed. Permanent, clearly legible markings shall indicate the image receptor size and SID for which each aperture is designed and shall indicate which aperture is in position for use.

(i) *Positive beam limitation (PBL).* These requirements apply to radiographic systems which contain PBL.

(1) *Field size.* When a PBL system is provided, it shall prevent x-ray production when: (i) either the length or width of the x-ray field in the plane of the image receptor differs from the corresponding image receptor dimension by more than 3 percent of the SID; or

(ii) the sum of the length and width differences as stated in §175.57(i)(1)(i), without regard to sign exceeds 4 percent of the SID.

(iii) The beam limiting device is at an SID for which PBL is not designed for sizing.

(2) *Conditions for PBL.* When provided, the PBL system shall function as described in §175.57(i)(1) whenever all the following conditions are met:

(i) the image receptor is inserted into a permanently mounted cassette holder;

(ii) the image receptor length and width are less than 50 cm;

(iii) the x-ray beam axis is within ± 3 degrees of vertical and the SID is 90 cm to 130 cm inclusive, or the x-ray beam is within ± 3 degrees of horizontal and the SID is 90 cm to 205 cm inclusive;

(iv) the x-ray beam axis is perpendicular to the plane of the image receptor to within ± 3 degrees; and

(v) neither tomographic nor stereoscopic radiography is being performed.

(3) *Operator initiated undersizing.* The PBL system shall be capable of operation such that, at the discretion of the operator, the size of the field may be made smaller than the size of the image receptor through stepless adjustment of the field size. Each dimension of the minimum field size at an SID of 100 cm shall be equal to, or less than, 5 cm. Return to PBL function as described in §175.57(i)(1) shall occur automatically upon any change of image receptor size or SID.

(4) *Override of PBL.* A capability may be provided for overriding PBL in case of system failure and for servicing the system. This override may be for all SIDs and image receptor sizes. A key shall be required for any override capability that is accessible to the operator. It shall not be possible to remove the key while PBL is overridden. Each such key switch or key shall be clearly and durably labeled as follows:

For X-Ray Field Limitation System Failure

The override capability is considered accessible to the operator if it is referenced in the operator's manual or in other material intended for the operator or if its location is such that the operator would consider it part of the operational controls.

(j) *Field limitation and alignment for spot-film devices.* The following requirements shall apply to spot-film devices, except when the spot-film device is provided for use with a radiation therapy simulation system:

(1) Means shall be provided between the source and the patient for adjustment of the x-ray field size in the plane of the image receptor to the size of that portion of the image receptor which has been selected on the spot-film selector. Such adjustment shall be accomplished automatically when the x-ray field size in the plane of the image receptor is greater than the selected portion of the image receptor. If the x-ray field size is less than the size of the selected portion of the image receptor, the field size shall not open automatically to the size of the selected portion of the image receptor unless the operator has selected that mode of operation.

(2) Neither the length nor the width of the x-ray field in the plane of the image receptor shall differ from the corresponding dimensions of the selected portion of the image receptor by more than 3 percent of the SID when adjusted for full coverage of the selected portion of the image receptor. The sum, without regard to sign, of the length and width differences shall not exceed 4 percent of the SID. On spot-film devices manufactured after February 25, 1978, if the angle between the plane of the image receptor and beam axis is variable, means shall be provided to indicate when the axis of the x-ray beam is perpendicular to the plane of the image receptor, and compliance shall be determined with the beam axis indicated to be perpendicular to the plane of the image receptor.

(3) The center of the x-ray field in the plane of the image receptor shall be aligned with the center of the selected portion of the image receptor to within 2 percent of the SID.

(4) Means shall be provided to reduce the x-ray field size in the plane of the image receptor to a size smaller than the selection portion of the image receptor such that:

(i) for spot-film devices used on fixed-SID fluoroscopic systems which are not required to, and do not, provide stepless adjustment of the x-ray field, the minimum field size, at the greatest SID, does not exceed 125 cm^2; or

(ii) for spot-film devices used on fluoroscopic systems that have a variable SID and/or stepless adjustment of the field size, the minimum field size, at the greatest SID, shall be containable in a square of 5 cm by 5 cm.

(5) A capability may be provided for overriding the automatic x-ray field size adjustment in case of a system failure. If it is so provided, a signal visible at the fluoroscopist's position shall indicate whenever the automatic x-ray field size adjustment override is engaged. Each such system failure override switch shall be clearly labeled as follows:

For X-Ray Field Limitation System Failure.

(k) *Source-skin distance.* Mobile and portable x-ray systems other than dental shall be provided with means to limit the source-skin distance to not less than 30 cm.

(l) *Beam-on indicators.* The x-ray control shall provide visual indication whenever x-rays are produced. In addition, a signal audible to the operator shall indicate that the exposure has terminated.

(m) *Multiple tubes.* Where two or more radiographic tubes are controlled by one exposure switch, the tube or tubes which have been selected shall be clearly indicated before initiation of

the exposure. This indication shall be both on the x-ray control and at or near the tube housing assembly which has been selected.

(n) *Radiation from capacitor energy storage equipment.* Radiation emitted from the x-ray tube shall not exceed:

(1) 8.6 E -9 C-kg^{-1} (0.03 mR) in one minute at 5 cm from any accessible surface of the diagnostic source assembly, with the beam-limiting device fully open, the system fully charged, and the exposure switch, timer, or any discharge mechanism not activated. Compliance shall be determined by measurements averaged over an area of 100 cm^2, with no linear dimension greater than 20 cm; and

(2) 2.58 E -5 C-kg^{-1} (100 mR) in one (1) hour at 100 cm from the x-ray source, with the beam-limiting device fully open, when the system is discharged through the x-ray tube either manually or automatically by use of a discharge switch or deactivation of the input power. Compliance shall be determined by measurement of the maximum exposure per discharge multiplied by the total number of discharges in one (1) hour (duty cycle). The measurements shall be averaged over an area of 100 cm^2 with no linear dimension greater than 20 cm.

§175.58 Dental radiography.

(a) The requirements of this section apply specifically to x-ray equipment and associated facilities used for dental radiography and are in addition to, and not in substitution for, other requirements of this Code.

(b) Non-certified dental units shall meet the equipment and use conditions outlined in §175.58(b)(1) through (8), with exceptions as noted. Certified equipment shall meet the conditions in §175.58(b)(1) through (9).

(1) *Source-to-skin distance.* X-ray systems designed for use with an intraoral image receptor shall be provided with means to limit source-to-skin distance to not less than 17.8 cm (7 in.) or 10.2 cm (4 in.) for equipment operating at 50 kVp.

(2) *Field limitation.* (i) Radiographic systems designed for use with an intraoral image receptor shall be provided with means to limit the x-ray field such that the x-ray field at the minimum SSD shall be containable in a circle having a diameter of not more than 7 cm (2.75 in.), except dental x-ray units manufactured before August 1, 1974 in which the x-ray beam shall not exceed 7.6 cm (3 in.) at the minimum SSD.

(ii) The operator shall position the end of the position indicating device (PID) within 1 cm (0.4 in.) of the skin of the patient, if such device is routinely used in conducting dental radiography.

(3) *Radiation exposure control.* (i) *Exposure initiation.*

(A) A device shall be provided to terminate the radiation exposure after a preset time interval or exposure. The exposure switch shall be of the dead-man type, and where protective barriers are required shall be so arranged that it cannot be operated outside the shielded area.

(B) An x-ray control shall be incorporated into each x-ray system such that an exposure can be terminated by the operator at any time, except for exposures of 0.5 sec or less.

(C) Termination of an exposure shall cause automatic resetting of the timer to its initial setting or to "zero."

(D) A timer setting beyond the necessary exposure time shall not be used.

(ii) *Exposure indication.* The x-ray control shall provide visual indication observable at or from the operator's protected position whenever x-rays are produced. A signal audible to the operator shall indicate that the exposure has terminated on dental x-ray units manufactured after August 1, 1974.

(4) *Timer reproducibility.* With a timer setting of 0.5 sec or less, the difference between the maximum exposure time (T_{max}) and the minimum exposure time (T_{min}) shall be less than or equal to 10 percent of the average exposure time (T), when four timing tests are performed:

$$(T_{max} – T_{min}) \# 0.10\ T.$$

(5) *Accuracy.* Deviation of technique factors from indicated values shall not exceed the limits specified for that system by its manufacturer. In the absence of manufacturer's specifications, the deviation shall not exceed 10% of the indicated value.

(6) *Kilovolts peak limitations.* Dental x-ray machines with a nominal fixed kVp of less than 50 kVp shall not be used to make diagnostic dental radiographs of humans.

(7) *Conditions for operation of equipment.* (i) Patient film holding devices shall be used when techniques permit. The x-ray system shall always be operated in such a manner that the useful beam at the patient's skin does not exceed the requirements of §175.58(b)(2).

(ii) The tube housing and the PID shall not be hand-held during an exposure.

(iii) Dental fluoroscopy shall not be used.

(iv) Time-temperature techniques or automatic processing shall be used to develop pre-operative diagnostic dental x-ray films. Processing techniques shall be consistent with those recommended by the x-ray film manufacturer. Sight developing of dental radiographs is prohibited except for films taken during operative procedures.

(v) Dental x-ray exposure technique factors and dental processing conditions shall yield entrance skin exposure (ESE) values for the bitewing x-ray projection that are identical to the range of ESE values for dental "D" and "E" speed film designations as published in HHS document #FDA-85-8245 (August 1985) or superseding documents.

(vi) Dental intraoral x-ray radiography shall be conducted with dental film classified American National Standards Institute (ANSI) speed group "D" or faster.

(vii) The tube head shall remain stationary when placed in the clinical exposure position.

(viii) All x-ray units manufactured before August 1, 1974 shall be equipped with electronic means (timers) for exposure control not later than January 1, 1997.

(ix) Persons not required for the dental x-ray procedure shall not be present in the dental x-ray room.

(8) For extraoral dental radiography, the x-ray film used as the recording medium during the x-ray examination shall show substantial evidence of cut-off (beam delineation).

(9) *Additional requirements applicable only to certified systems.* Certified dental x-ray units shall meet the following additional requirements:

(i) *Reproducibility.* When the equipment is operated on an adequate power supply as specified by the manufacturer, the estimated coefficient of variation of radiation exposures shall be no greater than 0.05 for any specific combination of selected technique factors.

(ii) *Linearity.* When the equipment allows a choice of x-ray tube current settings and is operated on a power supply as specified by the manufacturer in accordance with the requirements of applicable federal standards, for any fixed x-ray tube potential within the range of 40–100 percent of the maximum rating, the average ratios of exposure to the indicated mAs product obtained at any two consecutive tube current settings shall not differ by more than 0.10 times their sum:

$$(X_1 – X_2) \# 0.10\ (X_1\ X_2)$$

where X_1 and X_2 are the average mR/mAs values obtained at each of two consecutive tube current settings.

(iii) *Accuracy.* Deviation of technique factors from indicated values shall not exceed the limits specified for that system by its manufacturer.

(iv) *Beam quality.* All certified dental x-ray systems manufactured on or after December 1, 1980 shall have a minimum half-value layer not less than 1.5 mm aluminum equivalent. Systems operating above 70 kVp are subject to the filtration requirements of §175.56(f).

(c) *Facilities possessing a Cone Beam Computed Tomography (CBCT) unit.*

(1) Notwithstanding any provision of this Code to the contrary, dental facilities possessing a CBCT unit will be subject to the requirements of Section 175.07(b) of this Code, which requires a written quality assurance program for all dental equipment possessed by the facility, including a written quality control manual and a written radiation safety policy and procedures manual for the facility.

(i) For all intraoral, panoramic and cephalometric dental x-ray units (except CBCT units), the registrant must establish annual quality control testing of x-ray parameters sufficient to maintain patient doses and image quality consistent over time. The annual tests will evaluate, at a minimum, collimation, filtration, patient dose, accuracy and reproducibility of X-ray techniques and the operational status of x-ray safety features.

(ii) For all CBCT units, the quality control tests must follow the manufacturer's recommended tests and frequency and utilize the manufacturer's quality control phantom. The quality control test results will be retained for review by the Department until after the next scheduled inspection is completed by the Department. If manufacturer guidance is absent or recommendations do not include quarterly or more frequent quality control testing, the facility must establish quality control testing that includes, at a minimum, the following:

(A) Quarterly quality control tests to determine image noise, image uniformity, reconstructed image measurement accuracy, high contrast spatial resolution of the CBCT unit; and,

(B) Annual quality control tests to measure accuracy of imaging parameters (kVp, exposure time and dimensions of the scan beam), reproducibility of exposure per the most common scan, and beam filtration (HVL); and

(C) Annually, the facility will determine the patient radiation dose for the most common CBCT scan used at the facility as conducted by a medical physicist.

(d) *Conditions of operation for the CBCT unit.*

(1) Facilities possessing a CBCT unit must adhere to the requirements of Section 175.54 regarding the shielding requirements and operator protection for all CBCT units possessed by the dental facility.

(2) All operators of the CBCT must undergo training on the proper operation of the CBCT units and documentation of this training will be retained by the dental facility for review by the Department until after the next scheduled inspection is completed by the Department.

(3) All operators must be able to communicate with and visually observe the patient during the CBCT examination from the operator's protected position.

(4) CBCT patient exams will not be conducted solely for cosmetic purposes with no diagnostic value to the patient.

(5) The logbook for CBCT exams must contain all relevant diagnostic examination information, including but not limited to, x-ray technique, scan time, anatomical exam site and reason for examination.

§175.59 Podiatric radiography.

(a) *Equipment.* (1) Collimating devices capable of restricting the useful beam to the area of clinical interest shall be used.

(2) The x-ray films used as the recording medium during the x-ray examination shall show substantial evidence of cut-off (beam delineation).

(3) A device shall be provided which terminates the exposure after a preset time interval or exposure. The exposure switch shall be of the dead-man type and where protective barriers are required shall be so arranged that it cannot be operated outside the shielded area.

(4) Each installation shall be arranged so that the operator can stand at least two (2) meters (6 feet) from the patient, the x-ray tube and the useful beam during exposure. A protective barrier shall be provided when the operator cannot stand at least 2 meters (6 feet) away from the patient, the x-ray tube and the useful beam during exposures.

(b) *Conditions for operation of equipment.* (1) No person shall hold film during the exposure.

(2) Only persons required for the radiographic procedure shall be in the radiographic room during exposure.

§175.60 Fixed radiography (excluding dental, veterinary and podiatric radiography).

(a) *Equipment.* (1) Collimating devices capable of restricting the useful beam to the area of clinical interest shall be used.

(2) The x-ray films used as recording medium during the x-ray examination shall show substantial evidence of cut-off (beam delineation). In addition, general purpose equipment, exclusive of spot-film devices, shall be equipped with adjustable collimators with a means of visually defining the entire field. The total misalignment of the visually defined field with the x-ray field, along either the length or width dimensions, shall not exceed 2 percent of the SID. Such devices shall be calibrated in terms of the size of the projected useful beam at specified source-film distances with the same degree of accuracy.

(3) The technique factors to be used during an exposure shall be indicated before the exposure begins, except when automatic exposure controls are used, in which case the technique factors which are set prior to the exposure shall be indicated. On equipment having fixed technique factors, this requirement may be met by permanent markings. Indication of technique factors shall be visible from the operator's position except in the case of spot films made by the fluoroscopist.

(4) A device shall be provided which terminates the exposure after a preset time interval or exposure.

(5) A dead-man type of exposure switch shall be used and so arranged such that it cannot be operated outside a shielded area. Exposure switches for spot-film devices used in conjunction with fluoroscopic equipment are excepted from this shielding requirement.

(b) *Conditions for operation of equipment.* (1) No person shall be regularly employed to hold patients or films during exposures nor shall such duty be performed by an individual

occupationally exposed to radiation in the course of that individual's other duties. When it is necessary to restrain the patient, mechanical supporting or restraining devices should be used. If patients or films must be held by an individual, that individual shall be protected with appropriate shielding devices such as protective gloves and a protective garment of at least 0.25 mm lead equivalent. No part of the holding individual's body shall be in the useful beam. The exposure of any individual used for holding patients shall be monitored. Pregnant women and individuals under 18 years of age shall not hold patients under any conditions.

(2) Only persons required for the radiographic procedure shall be in the radiographic room during the exposure and, except for the patient, all such persons shall be equipped with appropriate shielding devices such as protective gloves and a protective garment of at least 0.25 mm lead equivalent.

(3) For patients who have not passed the reproductive age, gonadal shielding of not less than 0.5 mm lead equivalent shall be used during radiographic procedures in which the gonads are in the useful beam, except for cases in which this would interfere with the diagnostic procedure.

§175.61 Portable, bedside or mobile equipment (excluding dental, veterinary and podiatric radiography).

(a) *Equipment.* (1) Collimating devices capable of restricting the useful beam to the area of clinical interest shall be used.

(2) The x-ray films used as the recording medium during the x-ray examination shall show substantial evidence of cut-off (beam delineation). General purpose equipment, exclusive of portable equipment, shall be equipped with adjustable collimators with a means of visually defining the entire field. The total misalignment of the visually defined field with the x-ray field, along either the length or width dimensions, shall not exceed 2 percent of the SID. Such devices shall be calibrated in terms of the size of the projected useful beam at specified source-film distances with the same degree of accuracy.

(3) A device shall be provided which terminates the exposure after a preset time interval or exposure.

(4) All mobile, portable or bedside equipment shall be provided with cones or metal frames so that the minimum source-to-skin distance is at least 31 cm (12 in.).

(b) *Conditions for operation of equipment.* (1) No person shall be regularly employed to hold patients or films during exposures, nor shall such duty be performed by an individual occupationally exposed to radiation in the course of that individual's other duties. When it is necessary to restrain the patient, mechanical supporting or restraining devices should be used. If patient or films must be held by an individual, that individual shall be protected with appropriate shielding devices such as protective gloves and a protective garment of at least 0.25 mm lead equivalent. No part of the holding individual's body shall be in the useful beam. The exposure of any individual used for holding patients shall be monitored. Pregnant women and individuals under 18 years of age shall not hold patients under any conditions.

(2) For patients who have not passed the reproductive age, gonadal shielding of not less than 0.5 mm lead equivalent shall be used during radiographic procedures in which the gonads are in the useful beam, except for cases in which this would interfere with the diagnostic procedure.

(3) Personnel monitoring shall be required for all persons operating mobile or portable x-ray equipment.

§175.62 Fluoroscopy.

Fluoroscopic systems and associated components shall meet the following requirements:

(a) *Primary protective barrier.* (1) *Limitation of useful beam.* The entire cross-section of the useful beam shall be intercepted by the primary protective barrier of the fluoroscopic image assembly irrespective of position. The fluoroscopic tube shall not produce x-rays unless the barrier is in position to intercept the entire useful beam. The exposure rate due to transmission through the barrier with the attenuation block in the useful beam combined with radiation from the image intensifier, if provided, shall not exceed 5.16 E-7 C-kg^{-1} (2 milliroentgens) per hour at 10 cm (4 in.) from any accessible surface of the fluoroscopic imaging assembly beyond the plane of the image receptor for each roentgen per minute of entrance exposure rate.

(b) *Field limitation.* (1) *Image-intensified fluoroscopy.* For image-intensified fluoroscopic equipment the total misalignment of the edges of the x-ray field with the respective edges of the visible area of the image receptor along any dimension of the visually defined field in the plane of the image receptor shall not exceed 3 percent of the SID. The sum, without regard to sign, of the misalignment along any two orthogonal dimensions intersecting at the center of the visible area of the image receptor shall not exceed 4 percent of the SID. For rectangular x-ray fields used with circular image receptors, the error in alignment shall be determined along the length and width dimensions of the x-ray field which pass through the center of the visible area of the image receptor. Means shall be provided to permit further limitation of the field. The minimum field size, at the greatest SID, shall be equal to or less than 5 by 5 cm (2 by 2 in.).

(c) *Activation of tube.* X-ray production in the fluoroscopic mode shall be controlled by a device which requires continuous pressure by the operator for the entire time of any exposure. When recording serial fluoroscopic images, the operator shall be able to terminate the x-ray exposure(s) at any time, but means may be provided to permit completion of any single exposure of the series in process.

(d) *Entrance exposure rate limits.*

(1) The fluoroscopic exposure rate when measured under the following conditions shall not exceed 5 Roentgens per minute:

(i) the controls are set to the dose rate mode used for the fluoroscopic procedure most commonly performed on that fluoroscopic unit; and

(ii) the image intensifier is set to the largest field of view; and

(iii) the image intensifier is at 12 inches (30 cm) above the tabletop or the over table fluoro tube is at a source to image distance normally used for an average patient; and

(iv) a patient phantom composed of 1 and $^{1}/_{2}$ inch (3.8 cm) thickness of Type 1100 aluminum and 0.02 inch (0.5 mm) thickness of copper or an equivalent device is completely intercepting the useful beam; and

(v) the measurement is made at the measurement location specified in 21 CFR §1020.32(d)(3).

(vi) If the exposure rate cannot be measured, the exposure integrated for one minute under the same conditions as subparagraph (i) or paragraph (7) shall not exceed 5 Roentgens.

(2) The maximum exposure rate measured in air shall not exceed 10 Roentgens per minute, when measured in the manner as specified in 21 CFR §1020.32(d)(3), except as follows:

(i) Equipment manufactured before May 19, 1995 and certified in accordance with 21 CFR Part 1020 and having an optional high level control is limited to a maximum output of 5 Roentgens per minute unless the high level control is activated and an audible signal to that effect is provided. When the high level is activated, the maximum exposure rate measured in air at a

point where the center of the useful beam enters the patient shall not exceed 20 Roentgens per minute.

(ii) Certified equipment manufactured after May 19, 1995 with automatic exposure rate and having an optional high level control is limited to a maximum output of 10 Roentgens per minute unless the high level control is activated and an audible signal to that effect is provided. When the high level control is activated, the maximum exposure rate measured in air at a point where the center of the useful beam enters the patient shall not exceed 20 Roentgens per minute.

(iii) Certified equipment manufactured after May 19, 1995 without automatic exposure rate is limited to 5 Roentgens per minute unless the high level control is activated and an audible signal to that effect is provided. When the high level control is activated, the maximum exposure rate measured in air at a point where the center of the useful beam enters the patient shall not exceed 20 Roentgens per minute.

(3) With the system configured for the most frequently performed fluoroscopic procedure, exposure rates shall be measured with each of the following attenuators in the beam:

(i) 0.75 inches (19 mm) of aluminum (pediatric patient—25 kg.),

(ii) 1.50 inches (38 mm) of aluminum (small adult patient—50 kg.),

(iii) 1.50 inches (38 mm) of aluminum and 0.02 inches (0.5 mm) of copper (average adult patient—75 kg.),

(iv) 1.50 inches (38 mm) of aluminum and 0.08 inches (2.0 mm) of copper (large adult patient—100 kg.),

(v) 1.50 inches (38 mm) of aluminum and 0.08 inches (2.0 mm) of copper and 0.12 inches (3.0 mm) of lead (for maximum fluoroscopic exposure rate only).

The fluoroscopic exposure rates for the most frequently performed procedure shall be posted so that they are conspicuous to the operator.

(e) *Indication of potential and current.* During fluoroscopy and cinefluorography, x-ray tube potential and current shall be continuously indicated. Deviation of x-ray tube potential and current from the indicated values shall not exceed the maximum deviation as stated by the manufacturer in accordance with applicable Federal standards (21 CFR Part 1020 or successor regulations).

(f) *Source-skin distance.* Means shall be provided to limit the source-skin distance to not less than 38 cm (15 in.) on stationary fluoroscopes and to not less than 30 cm (12 in.) on mobile fluoroscopes. In addition, for image-intensified fluoroscopes intended for specific surgical applications that would be prohibited at the source-skin distances specified in §175.62(f), provision may be made for operation at shorter source skin distances but in no case less than 20 cm (8 in.). When provided, the manufacturer must set forth precautions with respect to the optional means of spacing in addition to other information as required in accordance with applicable Federal standards.

(g) *Fluoroscopic timer.* Fluoroscopy equipment shall not be operated for medical use unless a means is provided to preset the cumulative on-time of the fluoroscopic tube. The maximum cumulative time of the timing device shall not exceed 5 minutes without resetting. A signal audible to the fluoroscopist shall indicate the completion of any present cumulative on-time. Such signal shall continue to sound while x-rays are produced until the timing device is reset.

(h) *Contrast tests.* (1) The spatial resolution of the fluoroscopic system shall be measured using a test tool composed of a line pair (lp) plate with discreet line pair groups and a maximum lead foil thickness of 0.1 mm or an equivalent device. The test tool shall be placed on a 0.75 inch (19 mm) thickness of type 1100 aluminum, large enough to completely intercept the useful beam, with the test tool 12 inches (30 cm) from the entrance surface of the image receptor assembly. If

the system has variable source-to-image distance (SID), the measurement SID shall not exceed 40 inches (100 cm). The image receptor of the fluoroscopic system shall be operated in the six inches (15 cm) field of view (FOV) to conduct this test. If six inches (15 cm) FOV is not available, the system shall be operated in the smallest FOV that exceeds the six inches (15 cm) FOV. The minimum spatial resolution at the center of the beam for all FOVs shall be determined by the following equation:

2 lp/mm × (6 inches (15cm)/size of FOV used) = minimum number of lp/mm.

(2) The low contrast performance of the fluoroscopic system shall be capable of resolving a minimum hole size of 3 mm using a test tool composed of a 1.0 mm aluminum sheet with two sets of four holes of dimension 1.0, 3.0, 5.0 and 7.0 mm and a phantom composed of a 1 and $^{1}/_{2}$ inch (3.8 cm) thickness of Type 1100 aluminum large enough to completely intercept the useful beam or an equivalent device. The test tool shall be 12 inches (30 cm) from the entrance surface of the image receptor assembly. The image receptor of the fluoroscopic system shall be operated in the six inches (15 cm) FOV to conduct this test. If six inches (15 cm) FOV is not available, the system shall be operated in the smallest FOV that exceeds the six inches (15 cm) FOV.

(i) *Conditions for operation of equipment.* (1) The operator of any fluoroscopic installation shall determine and record the outputs made pursuant to §175.62(d) where the center of the useful beam enters the patient during routine fluoroscopy and cinefluorography. The rate shall be determined at least annually, each time a major component is serviced or replaced, when the outputs exceed the limits specified in §175.62 or when there is a reason to believe that the operating factors have changed significantly. Notwithstanding the requirements of §175.54, such measurements and measurement of stray radiation to operators and observers, are required when the equipment is first placed in operation.

(2) Protective garments of at least 0.25 mm lead equivalent shall be available and worn by the fluoroscopist during every examination.

(3) Unless measurements indicate that they are not needed, protective garments of at least 0.25 mm lead equivalent each shall be worn by any person within the fluoroscopy room.

(4) Only persons needed in the fluoroscopy room shall be present during the ex- posure.

(j) *Exemptions.* (1) Fluoroscopic radiation therapy simulation systems are exempt from the requirements of §175.62(a), (d), and (g) provided that:

(i) the systems are designed and used in a manner such that no individual other than the patient is in the x-ray room when the system is producing x-rays; and

(ii) systems which do not meet the requirements of §175.62(g) are provided with a means of indicating the cumulative time that an individual patient has been exposed to x-rays. Procedures shall require that the timer be reset between cases.

§175.63 Mammography.

(a) *Applicability.* The provisions of this section apply to all facilities which produce, process or interpret mammograms for screening and/or diagnostic purposes and are in addition to, and not in substitution for, other requirements of this Code.

(b) *Requirement for certification.* (1) Except for facilities holding provisional certificates as described in §175.63(b)(2), effective October 1, 1994 each mammography facility shall have received a certificate indicating approval by the U.S. Food and Drug Administration (FDA) to

provide screening and diagnostic mammography services pursuant to 21 CFR Section 900.11, or any successor law or regulation.

(2) A provisional certificate issued pursuant to 21 CFR Section 900.11, or any successor law or regulation, will be accepted in lieu of the certificate required by §175.63(b)(1) for a period of not longer than six (6) months from the date of issuance plus one ninety (90) day extension.

(c) *Equipment.* (1) Radiographic equipment designed for conventional radiographic procedures that has been modified or equipped with special attachments for mammography shall not be used for mammography.

(2) Radiographic equipment used for mammography shall:

(i) be certified by the U.S. Food and Drug Administration pursuant to 21 CFR 1010.2, or any successor law or regulation, as meeting the applicable requirements of 21 CFR 1020.30 and 21 CFR 1020.31 in effect on the date of manufacture; and

(ii) be specifically designed for mammography; and

(iii) incorporate a breast compression device; and

(iv) have the provision for operating with a removable grid, except for xeromammography systems.

(3) Beam quality for mammographic systems with a molybdenum target—molybdenum filter combination.

(i) When used with screen-film image receptors, and the contribution to filtration made by the compression device is included, the useful beam shall have a half-value layer (HVL) between the values of measured kVp/100 and measured kVp/100 0.1 mm aluminum.

(ii) For xeromammography, the HVL of the useful beam with the compression device in place shall be at least 1.0 and not greater than 1.6 mm aluminum, measured at 49 kVp with a tungsten target tube.

(d) *Dose.* (1) The average glandular dose delivered during a single cranio-caudal view of an approved phantom simulating a 4.5 cm thick, compressed breast consisting of 50 percent adipose and 50 percent glandular tissue, shall not exceed:

(i) 1 mGy (100 millirads) per exposure for screen-film mammography procedures without a grid;

(ii) 3 mGy (300 millirads) per exposure for screen-film mammography procedures with a grid; or

(iii) 4 mGy (400 millirads) per exposure for xeromammography procedures.

The dose shall be determined at least annually using the technique factors and conditions that are used to produce the phantom images submitted for accreditation.

(e) *Personnel.* The following requirements apply to personnel involved in any aspect of mammography, including the production, processing and interpretation of mammograms and related quality assurance activities.

(1) Interpreting physicians shall meet the following requirements:

(i) be licensed to practice medicine in the State of New York; and

(ii) have had the following training:

(A) be certified in an accepted speciality area by one of the bodies approved by FDA to certify interpreting physicians; or

(B) have had at least two (2) months of documented full-time training in the interpretation of mammograms, including instruction in radiation physics, radiation effects and radiation protection; and

(C) have forty (40) hours of documented continuing medical education in mammography. Time spent in residency specifically devoted to mammography is acceptable, if documented in writing by a fully qualified interpreting physician; and

(iii) have had the following initial experience:

(A) have read and interpreted the mammograms from the examinations of at least 240 patients in the six (6) months preceding application; or

(B) read and interpret mammograms as specified in §175.63(e)(1)(iii)(A) under the direct supervision of a fully qualified interpreting physician; and

(iv) have the following continuing experience:

(A) continue to read and interpret mammograms from the examination of an average of at least 40 patients per month over 24 months; and

(B) continue to participate in education programs, either by teaching or completing an average of at least five (5) continuing medical education credits in mammography per year.

(2) Radiologic technologists shall meet the following requirements:

(i) have a New York State license to perform radiographic procedures; and

(ii) have satisfied the requirements set forth in 21 C.F.R. §900.12(a)(2), or its successor regulation.

(3) Medical physicists shall meet the following requirements:

(i) have approval by the Department to conduct evaluations of mammography equipment and procedures required under the Public Health Service Act; or

(ii) be certified in an accepted speciality area by one of the bodies approved by FDA to certify medical physicists; or

(iii) for those medical physicists associated with facilities applying for accreditation before October 27, 1997, meet the following criteria:

(A) have a masters, or higher, degree in physics, radiological physics, applied physics, biophysics, health physics, medical physics, engineering, radiation science, or in public health with a bachelor's degree in the physical sciences; and

(B) have one (1) year of training in medical physics specific to diagnostic radiological physics; and

(C) have two (2) years of experience in conducting performance evaluation of mammography equipment; and

(iv) participate in continuing education programs related to mammography, either by teaching or completing an average of at least five (5) continuing education units per year.

(f) *Quality assurance.* (1) Each registrant performing mammography examinations shall establish and maintain a quality assurance program to assure the adequate performance of the radiographic equipment and other equipment and materials used in conjunction with such equipment to ensure the reliability and clarity of its mammograms. The program shall also require periodic monitoring of the dose delivered by the facility's examination procedures to ensure that it does not exceed the limit specified in §175.63(d) and is appropriate for the image receptor used.

(2) For screen-film systems, the mammography quality assurance program required by §175.63(f)(1) shall be substantially the same as that described in the 1992 edition of "Mammography Quality Control: Radiologist's Manual, Radiologic Technologist's Manual and Medical Physicist's Manual," prepared by the American College of Radiology, Committee on Quality Assurance in Mammography, or in any superseding document.

(3) For systems with alternate image receptor modalities, the mammography quality assurance program required by §175.63(f)(1) shall be substantially the same as the quality assurance

program recommended by the image receptor manufacturer, which, if followed, will allow a facility to maintain high image quality.

(4) The mammography quality assurance program required by §175.63(f)(1) shall provide for the maintenance of log books documenting compliance with the requirements of §175.63(f)(1) through (3) and recording corrective actions taken.

(5) Prior to performing patient mammography, using a breast equivalent phantom specified in §175.63(f)(7)(i), (ii) or (iii), the registrant shall optimize the mammographic system and determine image resolution, which shall be the reference image resolution for the mammographic system.

(6) The registrant shall use the breast equivalent phantom used to satisfy the requirement of §175.63(f)(5) to test image resolution of the mammographic system at monthly intervals; mobile and portable equipment shall be so tested each time the unit is moved or at monthly intervals, whichever is less.

(7) No patient mammogram shall be performed unless the mammographic system is capable of imaging, using phantom objects as follows:

(i) the phantom image shall achieve at least the minimum score established by an accreditation body approved by the FDA in accordance with 21 C.F.R. §900.3(d) or 900.4(a)(8), or successor regulations; or

(ii) the equivalent test object resolution on another phantom approved by the Department.

(8) *Diminished phantom test object resolution and facility follow-up.*

(i) If, when tested pursuant to §175.63(f)(6), the mammographic system detects two (or more) fewer test objects than the reference resolution image made pursuant to §175.63(f)(5), the cause of resolution loss shall be determined and corrected and the mammographic system re-optimized pursuant to §175.63(f)(5).

(ii) If the imaging system resolves less than seven (7) test objects in the phantom, in addition to the requirements of §175.63(f)(8)(i), there shall be:

(A) a review of monthly phantom images to determine at which point the image resolution fell below the minimum specified in §175.63(f)(7); and

(B) a review, by a physician(s) not from the facility who is approved by the Department and meets the requirements of §175.63(e)(1), to determine the diagnostic quality of the mammographic images.

(iii) The review required by §175.63(f)(8)(ii)(B) shall include:

(A) images from the range of studies performed by the facility which such physician(s) ascertains to be sufficient to determine that the clinical images are of diagnostic quality; and

(B) images from the time interval from when such review is required to the date when the system met the requirements of §175.63(f)(7).

(iv) If film images reviewed by the physician(s) pursuant to §175.63(f)(8)(iii)(B) are identified as not being of diagnostic quality, the facility shall, within five (5) business days, notify:

(A) the referring physician or other authorized referring practitioner, or the patient, if not referred by a practitioner, of the need for follow-up; and

(B) the Department of the results of the investigation and follow-up contacts.

(v) A record of the reviews and findings made pursuant to §175.63(f)(8)(ii)(B) shall be maintained by the registrant at the facility for review by the Department.

(vi) A record of the results of investigations and actions taken to correct any deficiency pursuant to this section shall be maintained for review by the Department for three (3) years.

(9) Each facility shall establish and maintain a clinical image quality control program, including at a minimum:

(i) monitoring of mammograms repeated due to poor image quality; and

(ii) maintenance of records, analysis of results and a description of any remedial action taken on the basis of such monitoring.

(10) Each facility shall establish a system for reviewing outcome date from all mammography performed, including follow-up on the disposition of positive mammograms and correlation of surgical biopsy results with mammogram reports.

(11) As part of its overall quality assurance program, each facility shall have a physicist with the qualifications specified in §175.63(e)(3) establish, monitor and direct the procedures required by §175.63(f) and perform a survey of the facility to assure that it meets the quality control and equipment standards as specified in §175.63(c)(2). Such surveys shall be performed at least annually and reports of such surveys shall be prepared and submitted to the body which accredited the facility. Each such report shall be retained by the facility for inspection by the Department.

(g) *Medical records.* (1) Each facility shall maintain mammograms and associated records in a permanent medical record of the patient as follows:

(i) for a period of not less than five (5) years or not less than ten (10) years, if no additional mammograms of the patient are performed at the facility, or longer as mandated by any applicable law or regulation; or

(ii) until requested by the patient to permanently transfer the records to a medical institution, to a physician of the patient or to the patient, and the records are so transferred.

(2) Each facility shall prepare a written report of the results of any mammography examination. Such report shall be completed as soon as reasonably possible and shall:

(i) be signed by the interpreting physician; and

(ii) be provided to the patient's physician(s) (if any); or

(A) if the patient's physician is not available or if the patient does not have a physician, the report shall be sent directly to the patient; and

(B) if such report is sent to the patient, it shall include a summary written in language easily understood by a lay person; and

(iii) be maintained in the patient's record pursuant to §175.63(g)(1).

(h) *Revocation of accreditation and accrediting body approval.* (1) If a facility's accreditation is revoked by an accrediting body (as defined in 21 CFR Section 900.2), the facility's certificate (as defined in 21 CFR Section 900.2) shall remain in effect until such time as determined by the FDA or other certifying body on a case-by-case basis after an investigation into the reasons for the revocation. If the FDA or other certifying body determines that the revocation was justified by violations of applicable quality standards, the FDA or other certifying body will suspend or revoke the facility's certificate and/or require the submission and implementation of a corrective action plan, whichever action will protect the public health in the least burdensome way.

(2) If the approval of an accrediting body is revoked by FDA, the certificates of the facilities accredited by such body shall remain in effect for a period of one (1) year after the date of such revocation subject to FDA's determination that the facility is continuing to perform mammography of acceptable quality. The facility must obtain accreditation from an approved accrediting body within one (1) year of the date of revocation.

§175.64 Therapeutic radiation machines.

(a) *Purpose and scope.* (1) This section establishes requirements for the use of radiation machines used for therapeutic purposes in the healing arts to protect public health and safety and for which the registrant is responsible. The requirements of this section are in addition to, and not in substitution for, other applicable provisions of this Code. Except as specifically provided otherwise in this section, the requirements of this section are applicable to all therapeutic radiation machines used in the City of New York for the treatment of humans, regardless of the date of installation.

(b) *Certified registration for therapeutic radiation machines.* (1) *Certified registration required.*

(i) Section 175.64(b) applies only to therapeutic radiation machines subject to the requirements of §175.64(g) of this Code.

(ii) All new facilities with therapeutic radiation machines subject to the requirements of §175.64(g) of this Code, and all such existing facilities not holding a certified registration on August 1, 1994, shall obtain a certified registration from the Department in accordance with the provisions of this section.

(2) *Certified registration application.* (i) If the application is for use sited in a medical institution, only the institution's management may apply; for use not sited in a medical institution, any professional practitioner may apply.

(ii) An application for a certified registration shall be filed in duplicate (original plus one copy) on, and shall contain completely and accurately all information called for by, a written form prescribed by the Department.

(iii) When a change affecting a radiation source or installation subject to the certified registration requirements of this section is considered by a registrant, including but not limited to changes ordered pursuant to this Code, so that the information on file with the Department, either in the initial certified registration application, or subsequent request for amendments, or in the initial certified registration or amendment previously granted, will no longer be accurate, the registrant shall so inform the Department in writing.

(A) For ministerial changes, such notification shall be within 10 days of effecting such change.

(B) For all other changes, an amendment must be requested and received pursuant to §175.64(b)(2)(xiv).

(C) Failure to notify the Department of a change of ownership or address of a radiation installation may result in revocation of the installation's certified registration under §175.64(b)(2)(xii).

(iv) At any time subsequent to the filing of an application for a certified registration and before the termination of a certified registration issued in response thereto, the Department may require the applicant to submit supplementary statements containing additional information to enable the Department to determine whether such application should be approved or denied, or whether a previously issued certified registration should be amended, suspended or revoked.

(v) Each application or supplementary statement shall be signed by either the applicant personally or a person duly authorized by the applicant to sign for and on the applicant's behalf.

(vi) The Department will approve an application for, and issue in response thereto, a certified registration if the Department determines that the following requirements have been met:

(A) the applicant's proposed use, equipment, facilities and procedures will protect health and safety and will minimize danger to life and property from radiation hazards; and

(B) the applicant's instrumentation is appropriate for detecting and measuring the type(s) of radiation produced (either directly or indirectly) by the radiation source requested in the application; and

(C) the applicant, or the applicant's personnel, if the applicant is not an individual, is qualified by training and experience to use such radiation source for the purposes covered by the application so as to protect public health and safety and to minimize danger to life and property from radiation hazards; and

(D) the applicant submits sufficient information to support a determination that the requirements of §175.64(b)(2)(vi)(A), (B) and (C) are met.

(vii) Certified registrations issued by the Department shall be in the form of a written authorization permitting possession and use of radiation therapy machines capable of operating at 500 kV (photons) and/or 500 keV (electrons) or higher. Such possession and use provided for in the foregoing shall be subject to the requirements of:

(A) all applicable provisions of this Code; and

(B) all conditions as stated on the certified registration issued by the Department.

(viii) Except as otherwise provided in this Code, each certified registration shall expire on the expiration date stated on the certified registration. If any registrant duly files with the Department an application in proper form for renewal of such certified registration, or for a new and superseding certified registration, not less than 30 days prior to the stated expiration date, such certified registration shall not be deemed to have expired until the Department has finally determined such application.

(ix) The Department may terminate any certified registration upon the written request of the registrant.

(x) The Department may at any time set forth in any certified registration or incorporate by reference therein, additional conditions, restrictions or requirements applicable to the registrant's transfer, receipt, possession or use of any radiation source covered by such certified registration in order to protect the public health and safety and to minimize danger to life and property from radiation hazards.

(xi) Any certified registration may be amended or revoked by the Department by reason of amendment of this Code, or any other applicable law or regulation.

(xii) Any certified registration may be suspended or revoked by the Department for:

(A) any material misstatement in the application therefor or in any supplementary statement thereto;

(B) any condition revealed by such application, supplementary statement, report, record, inspection or other means, which would warrant the Department's refusal to grant a certified registration on an original application; or

(C) any violation or failure to observe any condition of such certified registration, this Code, or any other applicable rule, regulation or law now or hereafter in effect.

(xiii) Any application by a registrant for the renewal of a certified registration, including amendments, shall be considered as an application for a certified registration and shall be filed on, and shall contain completely and accurately all information called for by, a written form or other manner prescribed by the Department. In considering any such application for renewal, the Department will apply the requirements set forth in §175.64(b)(2)(vi).

(xiv) A registrant shall apply for, and shall have received approval for, a certified registration amendment before:

(A) permitting anyone to work as an authorized user under the certified registration; (B) permanently changing the radiation safety officer or radiotherapy physicist;

(C) making any change in the treatment room shielding;

(D) making any change in the location of the therapeutic radiation machine within the treatment room;

(E) using the therapeutic radiation machine in a manner that could result in increased radiation levels in areas outside the treatment room;

(F) relocating the therapeutic radiation machine;

(G) allowing an individual not listed on the registrant's certified registration to perform the duties of the radiation therapy physicist, except during the temporary absence of the radiation therapy physicist when a person who is otherwise qualified to perform such duties may perform such duties. Such temporary absence shall not exceed sixty (60) days; or

(H) before changing non-ministerial statements, representations and/or procedures incorporated by reference into the certified registration.

Any application by a registrant for an amendment of a certified registration shall be filed in writing with the Department and shall set forth in detail the reasons for such requested amendment. In considering any such application for amendment, the Department will apply the requirements set forth in §175.64(b)(2)(vi).

(c) *Training requirements.* (1) The registrant of any therapeutic radiation machine shall require the authorized user to be a physician who:

(i) is certified in:

(A) Radiology, therapeutic radiology or radiation oncology by the American Board of Radiology; or

(B) Radiation oncology by the American Osteopathic Board of Radiology; or

(C) Radiology, with specialization in radiotherapy, as a British "Fellow of the Faculty of Radiology" or "Fellow of the Royal College of Radiology"; or

(D) Therapeutic radiology by the Canadian Royal College of Physicians and Surgeons; or

(ii) is in the active practice of therapeutic radiology, and has completed 200 hours of instruction in basic radiation techniques applicable to the use of an external beam radiation therapy unit, 500 hours of supervised work experience, and a minimum of three (3) years of supervised clinical experience.

(A) To satisfy the requirement for instruction, the classroom and laboratory training shall include:

(a) radiation physics and instrumentation;

(b) radiation protection;

(c) mathematics pertaining to the use and measurement of radiation; and

(d) radiation biology.

(B) To satisfy the requirement for supervised work experience, training shall be under the supervision of an authorized user at an institution and shall include:

(a) review of the full calibration measurements and periodic quality assurance checks;

(b) preparing treatment plans and calculating treatment times;

(c) using administrative controls to prevent misadministrations;

(d) implementing emergency procedures to be followed in the event of the abnormal operation of an external beam radiation therapy unit or its console; and

(e) checking and using survey meters.

(C) To satisfy the requirement for a period of supervised clinical experience, training shall include one (1) year in a formal training program approved by the Residency Review Committee for Radiology of the Accreditation Council for Graduate Medical Education or the Committee on Postdoctoral Training of the American Osteopathic Association and an additional two (2) years of clinical experience in therapeutic radiology under the supervision of an authorized user at a medical institution. The supervised clinical experience shall include:

(a) examining individuals and reviewing their case histories to determine their suitability for external beam radiotherapy treatment, and any limitations or contraindications;

(b) selecting the proper dose and how it is to be administered;

(c) calculating the external beam radiotherapy doses and collaborating with the authorized user in the review of patients' progress and consideration of the need to modify originally prescribed doses as warranted by patients' reaction to radiation; and

(d) post-administration followup and review of case histories.

(2) The registrant of any therapeutic radiation machine shall require the radiation therapy physicist to:

(i) be certified by the American Board of Radiology in:

(A) Therapeutic radiological physics; or

(B) Roentgen ray and gamma ray physics; or

(C) X-ray and radium physics; or

(D) Radiological physics; or

(ii) be certified by the American Board of Medical Physics in Radiation Oncology Physics; or

(iii) be certified by the Canadian College of Medical Physics; or

(iv) hold a master's or doctor's degree in physics, biophysics, radiological physics, or health physics, and have completed one (1) year of full time training in therapeutic radiological physics and an additional year of full time work experience under the supervision of a radiotherapy physicist at a medical institution. To meet this requirement, the individual shall have performed the tasks listed in §175.64(e)(1) and §175.64(g)(8) and (9) of this Code under the supervision of a radiation therapy physicist during the year of work experience.

(v) Notwithstanding the provision of §175.64(c)(2)(iv), as of January 1, 2000, the radiation therapy physicist shall be an individual who is certified as described in §175.64(c)(2)(i), (ii) or (iii).

(3) *Qualifications of operators.* (i) Any person, other than a qualified physician, who operates a therapeutic radiation machine for medical use shall be a licensed and registered radiation therapist, or a student currently enrolled in an approved program of study in radiation therapy technology and under the direct supervision of a qualified physician or licensed radiation therapist. Such direction or order to apply, or application of, radiation shall be in compliance with all applicable provisions of Title 10 of the New York Code of Rules and Regulations, Part 89, Subchapter L and Article 35 of the Public Health Law of the State of New York, or any successor laws or regulations.

(ii) The names and training of all personnel who currently operate any therapeutic radiation machine(s) shall be kept on file at the facility. Information on former operators shall be retained for a period of three (3) years beyond the last date such a person was authorized to operate a therapeutic radiation machine at the facility.

(4) The training and experience specified in §175.64(c)(1), (2) or (3) shall have been obtained within the 5 years preceding the date of application or the individual shall demonstrate continuing applicable experience since the required training and experience was completed.

(d) *General administrative requirements.* (1) The registrant shall be responsible for directing the operation of any therapeutic radiation machine and shall ensure that the requirements of this section are met in the operation of the therapeutic radiation machine(s).

(2) A therapeutic radiation machine which does not meet the requirements of this Code shall not be used for irradiation of patients.

(3) A physician shall not act as an authorized user for any therapeutic radiation machine which is subject to the provisions of §175.64(g) until such time as said physician's training has been reviewed and approved by the Department.

(4) *Written safety procedures and rules.* (i) Written safety procedures and rules, including any restrictions required for the safe operation of a particular therapeutic radiation machine, shall be developed by a radiation therapy physicist. At a minimum, these shall include:

(A) the procedure to be followed to ensure that, except for contact therapy machines, only the patient is in the treatment room before turning the primary beam of radiation on to begin a treatment or after a door interlock interruption; and

(B) the procedure to be followed if the operator is unable to turn the primary beam of radiation off with controls outside the treatment room or in the event that potential harm to the patient or personnel is imminent; and

(C) the names and telephone numbers of the authorized users, radiation safety officer and radiation therapy physicist to be contacted immediately if the therapeutic radiation machine or console operates abnormally.

(ii) Such procedures and rules shall be provided to each individual who operates a therapeutic radiation machine and shall be available at the control console of the therapeutic radiation machine.

(iii) The operator shall be able to demonstrate familiarity with these rules.

(iv) The registrant shall provide instruction in the written safety procedures and rules required by §175.64(d)(4)(i) to all individuals who operate a therapeutic radiation machine and shall provide appropriate refresher training to such individuals at intervals not to exceed one (1) year. Such instruction shall include "dry runs" of emergency procedures.

(v) The registrant shall retain for three (3) years a record of individuals receiving instruction required by §175.64(d)(4)(iv), a description of the instruction, the date of instruction, and the name of the individual who gave the instruction.

(5) All individuals associated with the operation of a therapeutic radiation machine shall be instructed in, and shall comply with, the provisions of the registrant's quality assurance program as required by §175.07 of this Code.

(6) Individuals shall not be exposed to the useful beam except for medical therapy purposes and unless such exposure has been ordered in writing by an authorized user who meets the training requirements of §175.64(c). This provision specifically prohibits deliberate exposure of an individual for training, demonstration or other non-healing arts purposes.

(7) For radiation therapy machines installed after August 1, 1994, the registrant shall maintain the following information for each therapeutic radiation machine for inspection by the Department:

(i) report of acceptance testing;

(ii) records of calibrations and periodic spot checks for the therapeutic radiation machine, as well as the name(s) of the person(s) who performed such activities;

(iii) records of major maintenance and modifications performed on the therapeutic radiation machine after August 1, 1994, as well as the name(s) of the person(s) who performed such services; and

(iv) copies of all correspondence with this Department regarding that therapeutic radiation machine.

(8) For each radiation therapy machine, the registrant shall retain records of all surveys for inspection by the Department.

(9) *Record retention.* (i) Unless specified otherwise, all records required by this section shall be retained until disposal is authorized by the Department. All required records shall be retained in an active file from at least the time of generation until the next Departmental inspection. Any required record generated prior to the last Departmental inspection may be microfilmed or otherwise archived providing a complete copy of such record can be retrieved until such time as the Department authorizes final disposal.

(e) *General technical requirements.* (1) *Protection surveys.*

(i) The registrant shall ensure that radiation protection surveys of all new facilities, and existing facilities not previously surveyed, are performed with an operable radiation measurement survey instrument calibrated in accordance with §175.64(h). The radiation protection survey shall be performed by a radiation therapy physicist or by a physicist certified by the American Board of Health Physics or by the American Board of Radiology, the American Board of Medical Physics or the Canadian College of Medical Physics in the appropriate specialty and shall verify, with the therapeutic radiation machine in a "BEAM-ON" condition with the largest clinically available treatment field and with a scattering phantom in the useful beam of radiation, that:

(A) radiation levels in restricted areas are not likely to cause personnel exposures in excess of the limits specified in §175.03(c); and

(B) radiation levels in unrestricted areas do not exceed the limits specified in §175.03(d).

(ii) In addition to the requirements of §175.64(e)(1)(i), a radiation protection survey also shall be performed prior to any subsequent medical use:

(A) after making any change in the treatment room shielding;

(B) after making any change in the location of the therapeutic radiation machine within the treatment room;

(C) after relocating the therapeutic radiation machine;

(D) before using the therapeutic radiation machine in a manner that could result in increased radiation levels in areas outside the external beam radiation therapy treatment room; or

(E) whenever there is reason to believe that radiation levels in unrestricted areas may have increased.

(iii) The survey record shall indicate all instances where the facility, in the opinion of the physicist performing the survey, is in violation of applicable regulations. The survey record also shall include the date of the measurements, the reason the survey is required, the manufacturer's name, model and serial number or other unambiguous identification of the therapeutic radiation machine and of the instrument(s) used to measure radiation levels, a plan of the areas surrounding (including accessible areas above and below) the treatment room which were surveyed, the measured dose rate at several points in each area expressed in mSv (millirems) per hour, the calculated maximum radiation exposure in a period of one (1) week for each restricted and unrestricted area, and the signature of the individual conducting the survey.

(iv) If the results of the surveys required by §175.64(e)(1)(i) or (ii) indicate any radiation levels in excess of the respective limits specified in §175.64(e)(1)(i), the registrant shall lock the control in the "OFF" position and not use the unit:

(A) except as may be necessary to repair, replace or test the therapeutic radiation machine, the therapeutic radiation machine shielding or the treatment room shielding; or

(B) until the registrant has applied for, and received, a specific exemption from the Department.

(2) If the survey required by §175.64(e)(1) indicates that an individual in an unrestricted area may be exposed to levels of radiation greater than those permitted by §175.03(d) of this Code, prior to the first medical use of the radiation therapy machine the registrant shall:

(i) equip the unit with beam direction interlocks or install additional radiation shielding to ensure compliance with §175.03(d) of this Code;

(ii) perform the survey required by §175.64(e)(1) again; and

(iii) include in the report required by §175.64(e)(3) the results of the initial survey, a description of the modification made to comply with §175.64(e)(2)(i), and the results of the second survey; or

(iv) request and receive an amendment to the certified registration that authorizes radiation levels in unrestricted areas greater than those permitted by §175.03(d) of this Code.

(3) *Reports of external beam radiation therapy surveys and measurements.* (i) The registrant for any therapeutic radiation machine subject to the requirements of §175.64(f) or §175.64(g) of this Code shall furnish a copy of the records required in §175.64(e)(1) and (2) to the Department within thirty (30) days following completion of the action that initiated the record requirement.

(4) A registrant shall control access to a therapeutic radiation machine treatment room by a door at each entrance.

(5) A registrant shall equip each entrance to a therapeutic radiation machine room with a beam condition indicator light.

(6) *Dosimetry equipment.* (i) The registrant shall have a calibrated dosimetry system available for use. The system shall have been calibrated for cobalt-60 by the National Institute of Standards and Technology (NIST, formerly the National Bureau of Standards) or by an American Association of Physicists in Medicine (AAPM) Accredited Dosimetry Calibration Laboratory (ADCL). The calibration shall have been performed within the previous two (2) years and after any servicing that may have affected system calibration.

(ii) The registrant shall have available for use a dosimetry system for quality assurance check measurements. To meet this requirement, the system shall be compared with a system calibrated pursuant to §175.64(e)(6)(i) and shall have been performed within the previous twelve (12) months and after each servicing that may have affected system calibration. Alternatively, the spot check system may be the same system used to meet the requirement in §175.64(e)(6)(i).

(iii) The registrant shall maintain a record of each dosimetry system calibration, intercomparison, and comparison for the duration of the registration or certified registration. For each calibration, intercomparison, or comparison, the record shall include the date, the model numbers and serial numbers of the instruments that were calibrated, intercompared, or compared as required by §175.64(e)(6)(i) and (ii), the correction factors that were determined, the names of the individuals who performed the calibration, intercomparison, or comparison, and evidence that the intercomparison was performed by, or under the direct supervision of, a radiation therapy physicist.

(f) *Therapeutic radiation machines incapable of operating at 500 kV or above.* (1) *Leakage radiation.*

(i) When the x-ray tube is operated at its maximum rated tube current for the maximum kV, the leakage air kerma rate shall not exceed:

(A) for 5–50 kV systems: 1 mGy (100 mrad) in any one hour at any position 5 cm from the tube housing assembly; or

(B) for 50 and kV systems: 1 cGy (1 rad) in any one hour in any direction at 1 m from the source. This air kerma measurement may be averaged over areas not larger than 100 cm^2. In addition, the air kerma rate at a distance of 5 cm from the surface of the tube housing shall not exceed 30 cGy (30 rad) per hour.

(2) *Permanent beam limiting devices.* (i) Permanent diaphragms or cones used for limiting the useful beam shall provide at least the same degree of attenuation as required for the tube housing assembly.

(3) *Adjustable or removable beam limiting devices.* (i) All adjustable or removable beam limiting devices, diaphragms, cones or blocks shall not transmit more than 5 percent of the useful beam for the most penetrating beam used.

(ii) When adjustable beam limiting devices are used, the position and shape of the radiation field shall be indicated by a light beam.

(4) *Filter system.* (i) The filter system shall be so designed that:

(A) filters cannot be accidentally displaced at any possible tube orientation;

(B) for equipment installed after August 1, 1994, an interlock system prevents irradiation if the proper filter is not in place; and

(C) the air kerma rate outside the useful beam measured 1 m from the filter slot shall not exceed 1 cGy (1 rad) in any hour under any operating conditions.

(ii) Each filter shall be marked as to its material of construction and its thickness.

(5) *Tube immobilization.* (i) The x-ray tube shall be mounted so that it cannot accidentally turn or slide with respect to the housing aperture; and

(ii) the tube housing assembly shall be capable of being immobilized for stationary portal treatments.

(6) *Source marking.* (i) The tube housing assembly shall be marked so that it is possible to determine the location of the source to within 5 mm, and such marking shall be readily accessible for use during calibration procedures.

(7) *Beam block.* (i) Contact therapy tube housing assemblies shall have a removable shield of material, equivalent in attenuation to 0.5 mm of lead at 100 kV, which can be positioned over the entire useful beam exit port during periods when the beam is not in use.

(8) *Timer.* (i) A suitable irradiation control device shall be provided to terminate the irradiation after a pre-set time interval.

(ii) A timer which has a display shall be provided at the treatment control panel. The timer shall have a pre-set time selector.

(iii) The timer shall be a cumulative timer which activates with an indication of "BEAM-ON" and retains its reading after irradiation is interrupted or terminated. After irradiation is terminated and before irradiation can be reinitiated, it shall be necessary to reset the timer.

(iv) The timer shall terminate irradiation when a pre-selected time has elapsed, if any dose monitoring system present has not previously terminated irradiation.

(v) The timer shall permit accurate pre-setting and determination of exposure times as short as 1 sec.

(vi) The timer shall not permit an exposure if set at zero.

(vii) The timer shall not activate until the shutter is opened when irradiation is controlled by a shutter mechanism unless calibration includes a timer error correction to compensate for mechanical lag.

(viii) The timer shall be accurate to within 1 percent of the selected value or 1 second, whichever is greater.

(9) *Control panel functions.* (i) The control panel, in addition to the displays required by other provisions in §175.64(f), shall have:

(A) an indication of whether electrical power is available at the control panel and if activation of the x-ray tube is possible;

(B) an indication of whether x-rays are being produced;

(C) a means for indicating x-ray tube potential and current;

(D) a means for terminating an exposure at any time;

(E) a locking device which will prevent unauthorized use of the therapeutic radiation machine; and

(F) for therapeutic radiation machines installed after August 1, 1994, a positive display of the specific filter(s) in the beam.

(10) *Multiple tubes.* (i) When a control panel may energize more than one x-ray tube:

(A) it shall be possible to activate only one x-ray tube at any time;

(B) there shall be an indication at the control panel identifying which x-ray tube is energized; and

(C) there shall be an indication at the tube housing assembly when that tube is energized.

(11) *Target-to-skin distance (TSD).* (i) There shall be a means of determining the central axis TSD to within 1 cm and of reproducing this measurement to within 2 mm thereafter.

(12) *Shutters.* (i) Unless it is possible to bring the x-ray output to the prescribed exposure parameters within 5 sec after the x-ray "ON" switch is energized, the beam shall be attenuated by a shutter having a lead equivalency not less than that of the tube housing assembly. In addition, after the unit is at operating parameters, the shutter shall be controlled electrically by the operator from the control panel. An indication of shutter position shall appear at the control panel.

(13) *Low filtration x-ray tubes.* (i) Each therapeutic radiation machine equipped with a beryllium or other low-filtration window shall be clearly labeled as such upon the tube housing assembly and shall be provided with a permanent warning device on the control panel that is activated when no addition filtration is present to indicate that the dose rate is very high.

(14) Facility design requirements for therapeutic radiation machines capable of operating in the range of greater than 50 kV to 500 kV.

(i) In addition to shielding adequate to meet the requirements of §175.03(d), the treatment room shall provide:

(A) a system for continuous two-way aural communication between the patient and the operator at the control panel; and

(B) a system to permit continuous observation of the patient during irradiation by the operator from the control panel.

(ii) The therapeutic radiation machine shall not be used for patient irradiation unless both aural communication with and continuous observation of the patient are possible.

(15) *Additional requirements.* (i) Treatment rooms which contain a therapeutic radiation machine capable of operating above 150 kV shall meet the following additional requirements:

(A) all protective barriers shall be fixed except for entrance doors or beam interceptors;

(B) the control panel shall be located outside the treatment room, or in a totally enclosed and shielded booth which has a ceiling, inside the room;

(C) interlocks shall be provided such that all entrance doors, including doors to any interior booths, shall be closed before treatment can be initiated or continued; and

(D) if the radiation beam is interrupted by any door opening, it shall not be possible to restore the machine to operation without closing the door and reinitiating irradiation by manual action at the control panel.

(16) *Full calibration measurements.* (i) Full calibration of a therapeutic radiation machine subject to the requirements of §175.64(f) of this Code shall be performed by, or under the direct supervision of, an authorized medical physicist:

(A) before the first medical use following installation or reinstallation of the therapeutic radiation machine;

(B) annually; and

(C) before medical use under the following conditions:

(a) whenever quality assurance check measurements indicate that the radiation output differs by more than 5 percent from the value obtained at the last full calibrations; or

(b) following any component replacement, major repair or modification of components that could affect the characteristics of the radiation beam.

(D) Notwithstanding the requirements of §175.64(f)(16)(i)(C):

(a) full calibration of therapeutic radiation machines with multi-energy capabilities is required only for those modes and/or energies that are not within their acceptable ranges; and

(b) if the repair, replacement or modification does not affect all energies, full calibration shall be performed at the affected energy that is in most frequent clinical use at the facility and the remaining energies may be validated by quality assurance check procedures using the criteria in §175.64(f)(16)(i)(C)(a).

(ii) Whenever a quality assurance check required by §175.64(f)(17) indicates a significant change in the operating characteristics of a system, as specified in the radiation therapy physicist's quality assurance manual, the system shall be recalibrated as specified herein.

(iii) To satisfy the requirement of §175.64(f)(16)(i), full calibration shall include all measurements recommended for annual calibration by the National Council on Radiation Measurement and Protection (NCRP) Report 69, "Dosimetry of X-Ray and Gamma Ray Beams for Radiation Therapy in the Energy Range 10 keV to 50 MeV" (1981), or any successor protocol, and be performed with a dosimetry system calibrated pursuant to §175.64(e)(6)(i).

(iv) The registrant shall maintain a record of each calibration for the duration of the registration. The record shall include the date of the calibration, the manufacturer's name, model and serial number or other unambiguous identification of both the therapeutic radiation machine and the x-ray tube, the model numbers and serial numbers or other unambiguous identification of the instruments used to calibrate the therapeutic radiation machine, and the signature of the radiation therapy physicist responsible for performing the calibration.

(17) *Periodic quality assurance checks.* (i) Periodic quality assurance checks shall be performed on therapeutic radiation machines subject to the requirements of §175.64(f) of this Code which are capable of operation at greater than 50 kV.

(ii) To satisfy the requirement of §175.64(f)(17)(i) of this Code, quality assurance checks shall meet the following requirements:

(A) the registrant shall perform quality assurance checks in accordance with written procedures established by the authorized medical physicist;

(B) the quality assurance check procedures shall specify that the quality assurance check shall be performed during the calibration specified in §175.64(f)(16)(i); and

(C) the quality assurance check procedures shall specify the frequency at which tests or measurements are to be performed and the acceptable tolerance for each parameter measured in the check, when compared to the value for that parameter determined in the full calibration specified in §175.64(f)(16)(i).

(iii) The cause for a parameter exceeding a tolerance set by the radiation therapy physicist shall be investigated and corrected before the system is used for patient irradiation.

(iv) The registrant shall use the dosimetry system specified in §175.64(e)(6)(ii) of this Code to make the periodic quality assurance check required in §175.64(f)(17)(i) of this Code.

(v) The registrant shall have the authorized medical physicist review and sign the results of each radiation output quality assurance check at intervals not to exceed one month.

(vi) Therapeutic radiation machines subject to the requirements of §175.64(f) of this Code shall have safety quality assurance checks of each external beam radiation therapy facility performed monthly. This requirement does not apply to facilities which have not been used for more than one month, except that such safety quality assurance checks shall be performed before the first clinical treatment when the facility is returned to use.

(vii) To satisfy the requirements of §175.64(f)(17)(vii) of this Code, safety quality assurance checks shall ensure proper operation of:

(A) electrical interlocks at each external beam radiation therapy room entrance, including those at any interior control booths;

(B) proper operation of the "BEAM-ON" and termination switches;

(C) beam condition indicator lights on the access door(s), control console and in the radiation therapy room;

(D) viewing and aural communication systems; and

(E) electrically operated treatment room doors from inside and outside the treatment room.

(viii) The registrant shall promptly repair any system identified in §175.64(f)(17)(vii) that is not operating properly.

(ix) The registrant shall maintain a record of each quality assurance check required by §175.64(f)(17)(i) and §175.64(f)(17)(vi) for three (3) years. The record shall include the date of the quality assurance check, the manufacturer's name, model and serial number or other unambiguous identification of the therapeutic radiation machine and of the instrument(s) used to measure the radiation output of the therapeutic radiation machine, and the signature of the individual who performed the periodic quality assurance check.

(18) *Operating procedures.* (i) The therapeutic radiation machine shall not be used for irradiation of patients unless the requirements of §175.64(f)(16) and §175.64(f)(17) have been met.

(ii) Therapeutic radiation machines shall not be left unattended unless it is secured pursuant to §175.64(f)(9)(i)(E).

(iii) When a patient must be held in position for radiation therapy, mechanical supporting or restraining devices shall be used.

(iv) The tube housing assembly shall not be held by an individual during operation unless the assembly is designed to require such holding and the peak tube potential of the system does not exceed 50 kV. In such cases, the holder shall wear protective garments of not less than 0.5 mm lead equivalency at 100 kV.

(v) A copy of the current operating and emergency procedures shall be maintained at the therapeutic radiation machine control console.

(vi) No individual other than the patient shall be in the treatment room during exposures from therapeutic radiation machines operating above 150 kV. At energies less than or equal to 150 kV, an individual, other than the patient, in the treatment room shall be protected by a barrier sufficient to meet the requirements of §175.03 of this Code.

(19) *Possession of survey instrument(s).* (i) Each facility location authorized to use a therapeutic radiation machine in accordance with §175.64(f) of this Code shall possess appropriately calibrated portable monitoring equipment. At a minimum, such equipment shall include a portable radiation measurement survey instrument capable of measuring dose rates over the range of 10 mSv (1 mrem) per hour to 10 mSv (1000 mrem) per hour. The survey instruments shall be operable and calibrated in accordance with §175.64(h).

(g) *Therapeutic radiation machines: photon therapy systems capable of operating at 500 kV and above and/or electron therapy systems capable of operating at 500 keV and above.* (1) All therapeutic radiation machines installed after August 1, 1994 shall have an active (not withdrawn or terminated), approved Premarket Approval Application (PMA) issued by the U.S. Food and Drug Administration pursuant to 21 CFR Part 814, or any successor law or regulation.

(2) Leakage radiation outside the maximum useful beam.

(i) The absorbed dose rate due to leakage radiation (excluding neutrons) at any point outside the maximum sized useful beam, but within a circular plane of radius two (2) meters which is perpendicular to and centered on the central axis of the useful beam at the nominal treatment distance (i.e. patient plane), shall not exceed a maximum of 0.2 percent and an average of 0.1 percent of the absorbed dose rate on the center axis at the treatment distance. Measurements shall be averaged over an area not exceeding 100 cm^2 at a minimum of 8 points uniformly distributed in the plane.

(ii) The neutron absorbed dose rate outside the useful beam shall be kept as low as practicable. Measurements of the portion of the leakage radiation dose contributed by neutrons shall be averaged over an area not exceeding 800 cm^2.

(iii) For each therapeutic radiation machine, the registrant shall determine, or obtain from the manufacturer, the leakage radiation existing at the positions specified in §175.64(g)(1)(i) and (ii) for the specified operating conditions.

(iv) Records on leakage radiation measurements shall be maintained at the installation for inspection by the Department.

(3) *Filters and wedges.* (i) Each filter and/or wedge which is removable from the system shall be clearly marked with an identification number. For removable wedge filters, the nominal wedge angle shall appear on the wedge or wedge tray (if permanently mounted to the tray). If the wedge or wedge tray is damaged, the wedge transmission factor shall be redetermined.

(4) *Termination switches.* (i) It shall be possible to terminate irradiation and equipment movement or go from an interruption condition to termination condition at any time from the operator's position at the treatment control panel.

(5) *Facility design requirements for therapeutic radiation machines capable of operating above 500 kV or 500 keV.* (i) In addition to shielding adequate to meet the requirements of §175.03 of this Code, the following design requirements are made:

(A) All protective barriers shall be fixed, except for access doors to the treatment room or movable beam interceptors.

(B) In addition to other requirements specified in this section, the control panel shall: *(a)* be located outside the treatment room;

(b) provide an indication of whether electrical power is available at the control panel and if activation of the radiation source is possible;

(c) provide an indication of whether radiation is being produced; and

(d) include a locking access control device which will prevent unauthorized use of the therapeutic radiation machine.

(C) There shall be a system for continuous two-way aural communication between the patient and the operator at the control panel.

(D) There shall be a system to permit continuous observation of the patient following positioning and during irradiation by the operator from the control panel.

(E) Treatment room entrances shall be provided with warning lights in a readily observable position near the outside of all access doors which will indicate when the useful beam is "ON" and when it is "OFF."

(F) Interlocks shall be provided such that all entrance doors must be closed before treatment can be initiated or continued; if the radiation beam is interrupted by any door opening, it shall not be possible to restore the machine to operation without closing the door and reinitiating irradiation by manual action at the control panel.

(G) If the shielding material in any protective barrier requires the presence of a beam interceptor to ensure compliance with §175.03(d) of this Code, interlocks shall be provided to prevent the production of radiation, unless the beam interceptor is in place, whenever the useful beam is directed at the designated barrier(s).

(H) In addition to the termination switch required by §175.64(g)(4), at least one (1) emergency power cutoff switch or button (e.g. "scram button") shall be located in the radiation therapy treatment room and shall terminate all equipment electrical power including radiation and mechanical motion; all emergency power cutoff switches shall include a manual reset so that the therapeutic radiation machine cannot be restarted from the unit's control panel without resetting the emergency cutoff switch.

(I) All safety interlocks shall be designed so that any defect or component failure in the safety interlock system prevents or terminates operation of the therapeutic radiation machine.

(J) Surveys for residual radioactivity shall be conducted on all therapeutic radiation machines capable of generating photon and electron energies above 10 MV or MeV prior to machining, removing or working on such machine's components which may have become activated due to photo-neutron production.

(6) (i) The authorized medical physicist named on the registrant's certified registration shall be responsible for:

(A) all full calibrations required by §175.64(g)(8) and protection surveys required by §175.64(e)(1);

(B) supervision and review of dosimetry as required by §175.07(c) of this Code;

(C) beam data acquisition and transfer for computerized dosimetry, and supervision of its use;

(D) quality assurance required by §175.07 of this Code and quality assurance check review required by §175.64(g)(9)(v);

(E) consultation with the authorized user(s) in treatment planning, as needed; and

(F) performance of calculations or other assessments regarding medical events.

(ii) If the authorized medical physicist named on the registrant's certified registration is not a full-time employee of the registrant, the operating procedures required by §175.64(g)(7) of this

Code shall specifically address how the radiation therapy physicist is to be contacted for problems or emergencies, as well as the specific actions to be taken until the radiation therapy physicist can be contacted.

(7) *Operating procedures.* (i) No individual, other than the patient, shall be in the treatment room during treatment.

(ii) The therapeutic radiation machine shall not be used for patient irradiation unless both aural and visual communication systems are operational and continuous observation of the patient is maintained.

(iii) No individual shall be in the treatment room during irradiation for testing or calibration purposes.

(iv) Therapeutic radiation machines shall not be used for medical use unless the requirements of §175.64(e)(1), §175.64(g)(8) and §175.64(g)(9) have been met.

(v) Therapeutic radiation machines, when not in operation, shall be secured to prevent unauthorized use.

(vi) If a patient must be held in position during treatment, mechanical supporting or restraining devices shall be used.

(vii) A copy of the current operating and emergency procedures shall be maintained at the therapeutic radiation machine control console.

(viii) Emergency procedures shall be posted in the treatment room.

(8) *Full calibration measurements.* (i) Full calibration of a therapeutic radiation machine subject to the requirements of §175.64(g) of this Code shall be performed by, or under the direct supervision of, the authorized medical physicist named on the registrant's certified registration:

(A) before first medical use following installation or reinstallation of the therapeutic radiation machine;

(B) annually; and

(C) before medical use under the following conditions:

(a) whenever quality assurance check measurements indicate that the output differs by more than five (5) percent from the output obtained at the last full calibration; and

(b) following any component replacement, major repair, or modification of components that could affect the characteristics of the radiation beam; and

(D) Notwithstanding the requirements of §175.64(g)(8)(i)(C):

(a) full calibration of therapeutic radiation machines with multi-energy and/or multi-mode capabilities is required only for those modes and/or energies that are not within their acceptable ranges; and

(b) if the repair, replacement or modification does not affect all modes and/or energies, full calibration shall be performed on the affected mode/energy that is in most frequent clinical use for that machine at the facility and the remaining energies/modes may be validated with quality assurance check procedures pursuant to the criteria in §175.64(g)(8)(i)(C)(*a*).

(ii) To satisfy the requirement of §175.64(g)(8)(i), full calibration shall include all measurements required for annual calibration by "Comprehensive QA for Radiation Oncology: Report of AAPM Radiation Therapy Committee Task Group 40," Medical Physics 21(4):581–, 1994, or any successor protocol. Additionally, the facility shall conduct the output calibration for the therapeutic radiation machine's photon and electron beam modes according to the protocol as outlined in AAPM Report Task Group Report 21 ("A Protocol for the Determination of Absorbed Dose from High-Energy Photon and Electron Beams" Task Group 21 (TG21), Radiation Therapy Committee of American Association of Physicists in Medicine, published in Medical Physics,

Volume 10(8), Nov/Dec 1983); or, AAPM Report Task Group Report 51(TG51) ("Protocol for Clinical Reference Dosimetry of High-Energy Photon and Electron Beams", Medical Physics, Volume 29(9), September 1999) or any successor to these documents.

(iii) The registrant shall use the dosimetry system described in §175.64(e)(6)(i) to measure the output at each discrete photon and electron energy (which the therapeutic radiation machine can produce) for one (1) set of exposure conditions. The remaining radiation measurements required in §175.64(g)(8)(ii) may then be made using a dosimetry system that indicates relative dose rates;

(iv) The registrant shall maintain a record of each calibration for the duration of the certified registration. The record shall include the date of the calibration, the manufacturer's name, model and serial number or other unambiguous identification of the therapeutic radiation machine along with the instrument's certificate of calibration, all measured beam output data collected during the calibration, the derivation for all the correction factors (as delineated in AAPM Reports TG 21 or TG 51 or any successor publication) applied to the `measured beam output data' in the calculation of the therapeutic radiation machine's beam output dose rate (the latter shall be conducted for each photon and electron beam clinically utilized at the facility), and the signature of the radiation therapy physicist named on the certified registration.

(9) *Periodic quality assurance checks.* (i) Periodic quality assurance checks shall be performed on each therapeutic radiation machine subject to the requirements of §175.64(g) of this Code.

(ii) To satisfy the requirement of §175.64(g)(9)(i), quality assurance checks shall include determination of all parameters for periodic quality assurance checks at the intervals contained in "Comprehensive QA for Radiation Oncology: Report of AAPM Radiation Therapy Committee Task Group 40," *Medical Physics 21(4):581–, 1994,* or any successor protocol.

(iii) The registrant shall use a dosimetry system described in §175.64(e)(6)(ii) to make the periodic quality assurance checks required by §175.64(g)(9)(ii).

(iv) The registrant shall perform periodic quality assurance checks required by §175.64(g)(8)(i) of this Code in accordance with procedures established by the authorized medical physicist named on the registrant's certified registration.

(v) The registrant shall review the results of each periodic radiation output check according to the following procedures:

(A) the authorized user and authorized medical physicist shall be notified immediately if any parameter is not within its acceptable range as determined pursuant to §175.64(g)(9)(iv) of this Code. The therapeutic radiation machine shall not be made available for subsequent medical use until the authorized medical physicist has determined that all parameters are within their acceptable ranges;

(B) if all quality assurance check parameters appear to be within their acceptable ranges, the quality assurance check shall be reviewed and signed by either the authorized user or the authorized medical physicist within ten (10) days; and

(C) the authorized medical physicist shall review and sign the results of each radiation output quality assurance check at intervals not to exceed one (1) month.

(vi) Therapeutic radiation machines subject to the requirements of §175.64(g) of this Code shall have safety quality assurance checks of each external beam radiotherapy facility weekly.

(vii) To satisfy the requirement of §175.64(g)(9)(vi), safety quality assurance checks shall ensure proper operation of:

(A) electrical interlocks at each therapeutic radiation machine treatment room entrance;

(B) proper operation of "BEAM-ON", interrupt and termination switches;

(C) beam condition indicator lights on the access doors, control console, and in the radiation therapy treatment room;

(D) viewing and aural communication systems;

(E) electrically operated treatment room door(s) from inside and outside the treatment room;

(F) at least one (1) emergency power cutoff switch. If more than one (1) emergency power cutoff switch is installed and not all switches are tested at once, each switch shall be tested on a rotating basis.

(viii) The registrant shall lock the control console in the "off" position if any door interlock malfunctions. No registrant shall use the therapeutic radiation machine until the interlock system is repaired unless specifically authorized by the Department.

(ix) The registrant shall promptly repair any system identified in §175.64(g)(9)(vii) that is not operating properly.

(x) The registrant shall maintain a record of each quality assurance check required by §175.64(g)(9)(i) and (vii) for three (3) years. The record shall include the date of the quality assurance check, the manufacturer's name, model and serial number or other unambiguous identification of the therapeutic radiation machine of the instrument(s) used to measure the output of the therapeutic radiation machine, and the signature of the individual who performed the periodic quality assurance check.

(10) *Reports of calibrations.* (i) The registrant shall furnish a copy of the initial full calibration report required by §175.64(g)(8)(i)(A) of this Code to the Office of Radiological Health within thirty (30) days following completion of the calibration.

(11) *Possession of survey instrument(s).* (i) Each facility location authorized to use a therapeutic radiation machine in accordance with §175.64(g) of this Code shall possess appropriately calibrated portable monitoring equipment. At a minimum, such equipment shall include a portable radiation measurement survey instrument capable of measuring dose rates over the range of 10 mSv (1 mrem) per hour to 10 mSv (1000 mrem) per hour. The survey instruments shall be operable and calibrated in accordance with §175.64(h).

(h) *Calibration and check of survey instruments.* (1) The registrant shall ensure that the survey instruments used to show compliance with the requirements of this section and other applicable parts of this Code have been calibrated before first use, at intervals not to exceed twelve (12) months and following repair.

(2) To satisfy the requirements of §175.64(h)(1) of this Code, the registrant shall:

(i) calibrate all required scales with readings up to 10 mSv (1000 mrem) per hour with an appropriate radiation source, the intensity of which is determined to within 10 percent accuracy;

(ii) calibrate at least two separate readings at approximately one-third and two-thirds of the full scale reading on each scale or decade that will be used to show compliance; and

(iii) conspicuously note on the instrument the apparent exposure rate from a dedicated check source as determined at the time of calibration, and the date of calibration.

(3) To satisfy the requirements of §175.64(h)(2), the registrant shall:

(i) consider a point as calibrated if the indicated dose rate differs from the calculated dose rate by not more than ten (10) percent; or

(ii) consider a point as calibrated if the indicated dose rate differs from the calculated dose rate by not more than twenty (20) percent if a correction factor or graph is conspicuously attached to the instrument.

(4) The registrant shall retain a record of each calibration required in §175.64(h)(1) of this Code for three (3) years and which shall include:

(i) a description of the calibration procedure;
(ii) the manufacturer, model and serial number of the instrument;
(iii) a description of the source used and the certified dose rates from the source (as evidenced by NIST traceability);
(iv) the rates indicated by the instrument being calibrated, the correction factors determined from the calibration data; and
(v) the signature of individual who performed the calibration and the date of calibration.
(5) Records of calibrations which contain information required by §175.64(h)(4) shall be maintained by the registrant at the facility.

§175.65 Veterinary radiography and fluoroscopy.

(a) *Fixed radiographic installations.* (1) *Equipment.*
(i) Collimating devices capable of restricting the useful beam to the area of clinical interest shall be used.
(ii) The x-ray films used as the recording medium during the x-ray examination shall show substantial evidence of cut-off (beam delineation).
(iii) A device shall be provided which terminates the exposure after a preset time interval or exposure. The exposure switch shall be of the dead-man type and shall be so arranged that it cannot be operated outside a shielded area.
(2) *Conditions for operation of equipment.* (i) Only persons required for the x-ray procedure shall be in the x-ray room during exposures.
(ii) When an animal patient must be held in position during exposures, mechanical supporting or restraining devices shall be used.
(iii) Animal patients or films shall be held by an individual only under extreme conditions when clinically necessary. Such individuals shall wear protective gloves having at least 0.5 mm lead equivalent, a protective garment of at least 0.25 mm lead equivalent, and shall keep all parts of his/her body out of the useful beam.
(iv) The exposure of any individual used for holding animals shall be monitored.
(v) Pregnant women and individuals under 18 years of age shall not hold animal patients or films under any conditions.
(b) *Portable or mobile radiographic installations.* (1) *Equipment.*
(i) Collimating devices capable of restricting the useful beam to the area of clinical interest shall be used.
(ii) The x-ray film used as the recording medium during the x-ray examination shall show evidence of cut-off (beam delineation).
(iii) A device shall be provided which terminates the exposure after a preset time interval or exposure.
(iv) A dead-man type of exposure switch shall be provided with a cord of sufficient length so that the operator can stand at least two (2) m (6 ft) from the animal patient, the x-ray tube and out of the useful beam.
(2) *Conditions for operation of equipment.* (i) No person shall be regularly employed to support or hold animals or film during x-ray exposures.
(ii) When an animal patient must be held in position during exposures, mechanical supporting or restraining devices shall be used.
(iii) Animal patients or films shall be held by an individual only under extreme conditions when clinically necessary. Such individuals shall wear protective gloves having at least 0.5 mm

lead equivalent, a protective garment of at least 0.25 mm lead equivalent, and shall keep all parts of his/her body out of the useful beam.

(iv) The exposure of any individual used for holding animals shall be monitored.

(v) Pregnant women and individuals under 18 years of age shall not hold animal patients or films under any conditions.

(c) *Fluoroscopic installations.* (1) *Equipment.*

(i) Equipment shall be so constructed that the entire cross-section of the useful beam is always intercepted by a primary protective barrier (usually a lead glass screen or image intensifier assembly) regardless of the panel-screen distance. For conventional fluoroscopes, this requirement may be assumed to have been met if, when the collimating system is opened to its fullest extent, an unilluminated margin is left on all edges of the fluorescent screen regardless of the position of the screen during use. Equipment with an image intensifier shall be so constructed that the useful beam cannot exceed the limits of the input phosphor.

(ii) The exposure shall automatically terminate when the barrier is removed from the useful beam.

(iii) With the fluoroscope operating at the highest potential employed and with the fluorescent screen 36 cm (14 in.) from the panel of the tabletop and in the useful beam without a patient, the exposure rate 5 cm (2 in.) beyond the viewing surface of the screen shall not exceed 7.74 E-6 C-kg^{-1}-hr^{-1} (30 mR-hr^{-1}) for each 2.58 E-4 C-kg^{-1}- min^{-1} (R-min^{-1}) at the tabletop.

(iv) The fluoroscopic exposure switch shall be of the dead-man type.

(v) Provision shall be made to intercept the scattered x-rays from the undersurface of the tabletop and other structures under the table.

(vi) The source-panel or source-tabletop distance shall in no case be less than 30 cm (12 in.) and is recommended to be not less than 38 cm (15 in.).

(2) *Mobile fluoroscopic equipment is subject to the following additional requirements.* (i) In the absence of a tabletop, a cone or spacer frame shall limit the source-to-skin distance to not less than 30 cm (12 in.).

(ii) Image intensification shall always be provided.

(iii) It shall not be possible to operate a machine unless the useful beam is intercepted by the image intensifier.

(3) *Conditions for operation of equipment.* (i) Protective garments of at least 0.25 mm lead equivalent shall be available and shall be worn by the fluoroscopist during every examination.

(ii) Unless physical measurements indicate that they are not needed, protective garments of at least 0.25 mm lead equivalent each shall be worn by the physician, nurse, technician and all other persons within the fluoroscopy room.

(iii) Only persons needed in the fluoroscopic room shall be present during the exposure.

(iv) The fluoroscopic room shall be free of extraneous light that interferes with the examination.

§175.66 Miscellaneous and special types of radiation equipment.

(a) Types or uses of radiation producing equipment not specifically listed or covered by these regulations, and not specifically exempted, shall be manufactured, operated or used such that the radiation level measured 5 cm (2 inches) from any accessible surface, and averaged over an area of 10 cm^2 (1.55 $in.^2$), shall not exceed 1.3 E-7 C/kg (0.5 milliroentgen) per hour.

§175.101 General requirements for radioactive materials licenses.

(a) *License required.* (1) (i) Except for the removal of source material from its place of deposit in nature or as otherwise provided in this Code, no person shall transfer, receive, produce, possess or use any radioactive material except pursuant to a license issued by the Department.

(ii) Except as provided in 10 CFR §§30.3(b)(2), (b)(3), (c)(2), and (c)(3), and for persons exempt as provided in 10 CFR §30.3 and 10 CRF Part 150, no person shall manufacture, produce, transfer, receive, acquire, own, possess, or use byproduct material unless authorized in a specific or general license issued in accordance with this Code.

(2) Fees for each license shall be paid pursuant to §5.07 of this Code.

(3) The requirements of this section are in addition to, and not in substitution for, other requirements of this Code. In any conflict between the requirements of this section and a specific requirement in another part of this Code, the specific requirement governs.

(b) *Exempt source material.* (1) Any person is exempt from the provisions of this code to the extent that such person receives, possesses, uses or transfers unrefined and unprocessed ore containing source material; provided that, except as authorized in a specific license issued by the Department, the U.S. Nuclear Regulatory Commission or an agreement state, such person shall not refine or process such ore.

(2) Any person is exempt from the provisions of this Code to the extent that such person receives, possesses, uses or transfers source material in any chemical mixture, compound, solution or alloy in which the source material is by weight less than 1/20 of 1 percent (0.05%) of the mixture, compound, solution or alloy.

(3) Any person is exempt from the provisions of this Code to the extent that such person receives, possesses, uses or transfers:

(i) any quantities of thorium contained in:

(A) incandescent gas mantles;

(B) vacuum tubes;

(C) welding rods;

(D) electric lamps for illuminating purposes provided that each lamp does not contain more than 50 milligrams of thorium;

(E) germicidal lamps, sunlamps, and lamps for outdoor or industrial lighting provided that each lamp does not contain more than 2 grams of thorium;

(F) rare earth metals and compounds, mixtures, and products containing not more than 0.25 percent, by weight of thorium, uranium, or any combination of these; or

(G) personnel neutron dosimeters, provided that each dosimeter does not contain more than 50 milligrams of thorium;

(ii) any source material contained in the following products:

(A) glazed ceramic tableware, provided that the glaze contains not more than 20 percent by weight source material;

(B) glassware, containing not more than 10 percent by weight source material, but not including commercially manufactured glass brick, pane glass, ceramic tile or other glass, glass enamel or ceramic used in construction;

(C) glass enamel or glass enamel frit containing not more than 10 percent by weight of source material imported or ordered for importation into the United States, or initially distributed by manufacturers in the United States, before July 25, 1983; or

(D) piezoelectric ceramic, containing not more than 2 percent by weight source material;

(iii) photographic film, negatives, and prints containing uranium or thorium;

(iv) any finished or partly fabricated product of, or containing, tungsten- thorium or magnesium-thorium alloys, provided that the thorium content of the alloy does not exceed 4 percent by weight and that this exemption shall not be deemed to authorize the chemical, physical, or metallurgical treatment or processing of any such product or part;

(v) uranium contained in counterweights installed in aircraft, rockets, projectiles, and missiles, or stored or handled in connection with installation or removal of such counterweights, provided that:

(A) each counterweight is manufactured in accordance with a specific license issued by the U.S. Nuclear Regulatory Commission, authorizing distribution by the licensee pursuant to 10 CFR Part 40;

(B) each counterweight has been impressed with the following legend clearly legible through any plating or other covering: "DEPLETED URANIUM";

(C) each counterweight is durably and legibly labeled or marked with the identification of the manufacturer and the statement: "UNAUTHORIZED ALTERATIONS PROHIBITED"; and

(D) this exemption shall not be deemed to authorize the chemical, physical, or metallurgical treatment or processing of any such counterweights other than repair or restoration of any plating or other covering;

(vi) natural or depleted uranium metal used as shielding constituting part of any shipping container, provided that:

(A) the shipping container is conspicuously and legibly impressed with the legend "Caution—Radioactive Shielding—Uranium"; and

(B) the uranium metal is encased in mild steel or equally fire resistant metal or minimum wall thickness of one-eighth inch (3.2 mm);

(vii) thorium contained in finished optical lenses, provided that each lens does not contain more than 30 percent by weight of thorium, and that this exemption shall not be deemed to authorize either:

(A) the shaping, grinding, or polishing of such lens or manufacturing processes other than the assembly of such lens into optical systems and devices without any alteration of the lens; or

(B) the receipt, possession, use, or transfer of thorium contained in contact lenses, or in spectacles, or in eyepieces in binoculars or other optical instruments;

(viii) uranium contained in detector heads for use in fire detection units, provided that each detector head contains not more than 0.005 microcurie of uranium;

(ix) thorium contained in any finished aircraft engine part containing nickel-thoria alloy, provided that:

(A) the thorium is dispersed in the nickel-thoria alloy in the form of finely divided thoria (thorium dioxide); and

(B) the thorium content in the nickel-thoria alloy does not exceed 4 percent by weight.

(x) The exemptions contained in §175.101(b)(2) and (3)(i) through (ix) shall not authorize the manufacturer of any of the products described.

(c) *Exempt radioactive material other than source material.* (1) *Exempt concentrations.*

(i) Except as provided in §175.101(c)(1)(ii), any person is exempt from the provisions of this Code to the extent that such person receives, possesses, uses, transfers, owns or acquires products containing radioactive material introduced in concentrations not in excess of those listed in Schedule A of this section.

(ii) No person may introduce radioactive material into a product or material knowing or having reason to believe that it will be transferred to persons exempt under §175.101(c)(1)(i) or

equivalent regulations of the U.S. Nuclear Regulatory Commission or an agreement state, except in accordance with a specific license issued pursuant to this Code or a general license provided for in this Code.

(2) *Exempt quantities.* (i) Except as provided in §175.101(c)(2)(ii) and (iii), any person is exempt from the provisions of this Code to the extent that such person receives, possesses, uses, transfers, owns or acquires radioactive material in individual quantities, each of which does not exceed the applicable quantity set forth in Schedule B of this section.

(ii) Section 175.101(c)(2)(i) does not authorize the production, packaging or repackaging of radioactive material for purposes of commercial distribution, or the incorporation of radioactive material into products intended for commercial distribution.

(iii) No person shall, for purposes of commercial distribution, transfer radioactive material in the individual quantities set forth in Schedule B of this section, knowing or having reason to believe that such quantities of radioactive material will be transferred to persons exempt under §175.101(c)(2)(i) or equivalent regulations of the U.S. Nuclear Regulatory Commission or an agreement state, except in accordance with a specific license issued by the U.S. Nuclear Regulatory Commission pursuant to §32.18 of 10 CFR Part 32, or by the Department, which license states that the radioactive material may be transferred by the licensee to persons exempt under §175.101(c)(2)(i) or the equivalent regulations of the U.S. Nuclear Regulatory Commission or any agreement state.

(iv) Pursuant to 10 CFR §30.18(b), any person who possesses byproduct material received or acquired before September 25, 1971, under the general license then provided in 10 CFR §31.4 or similar general license of a state, is exempt from the requirements for a license set forth in section 81 of the Act and from the regulations in 10 CFR Parts 30 through 34, 36 and 39 to the extent that this person possess, uses , transfers or owns byproduct material.

(3) *Exempt items.* Except for persons who apply radioactive material to, or persons who incorporate radioactive material into the following products, or persons who initially transfer such products for sale or distribution, any person is exempt from the provisions of this Code to the extent that such person receives, possesses, uses, transfers, owns or acquires the following products:

(i) Timepieces or timepiece hands or dials containing radium which were manufactured under a specific license issued by the Department or an agreement state and which meet the following or equivalent conditions:

(A) The timepiece or timepiece hands or dials contain no more than the following specified quantities of radium:

(a) 5.55 kBq (0.15 mCi) per watch;

(b) 1.11 kBq (0.03 mCi) per watch hand;

(c) 3.33 kBq (0.09 mCi) per watch dial;

(d) 7.4 kBq (0.2 mCi) per clock;

(e) 1.48 kBq (0.04 mCi) per clock hand;

(f) 4.44 kBq (0.12 mCi) per clock dial; or

(g) 37 kBq (1 mCi) of radium-226 per timepiece in intact timepieces manufactured prior to November 30, 2007.

(B) The timepiece is not a pocket watch.

(C) The timepiece is marked or coded to identify the date of manufacture and that it contains radium.

(D) The timepiece emits sufficient luminosity, omitting photoactivation, that its dial can be read in the dark during its entire design lifetime.

(ii) Timepieces or hands or dials containing not more than the following specified quantities of radioactive material and not exceeding the following specified radiation dose rates:

(A) 925 MBq (25 mCi) of hydrogen-3 per timepiece.

(B) 185 MBq (5 mCi) of hydrogen-3 per hand.

(C) 555 MBq (15 mCi) of hydrogen-3 per dial (bezels when used shall be considered as part of the dial).

(D) 3.7 MBq (100 mCi) of promethium-147 per watch or 7.4 MBq (200 mCi) of promethium-147 per any other timepiece.

(E) 0.74 MBq (20 mCi) of promethium-147 per watch hand or 1.48 MBq (40 mCi) of promethium-147 per other timepiece hand.

(F) 2.22 MBq (60 mCi) of promethium-147 per watch dial or 4.44 MBq (120 mCi) of promethium-147 per other timepiece dial (bezels when used shall be considered as part of the dial).

(G) The radiation dose rate from hands and dials containing promethium-147 will not exceed, when measured through 50 milligrams per square centimeter of absorber:

(a) for wristwatches, 1 mGy (0.1 millirad) per hour at 10 centimeters from any surface; *(b)* for pocket watches, 1 mGy (0.1 millirad) per hour at 1 centimeter from any surface; *(c)* for any other timepiece, 2 mGy (0.2 millirad) per hour at 10 centimeters from any surface.

(H) 37 kBq (1 mCi) of radium-226 per timepiece in timepieces manufactured prior to November 30, 2007.

(iii) Lock illuminators containing not more than 555 MBq (15 millicuries) of hydrogen-3 or not more than 74 MBq (2 millicuries) of promethium-147 installed in automobile locks. The radiation dose rate from each lock illuminator containing promethium-147 will not exceed 10 mGy (1 millirad) per hour at one centimeter from any surface when measured through 50 milligrams per square centimeter of absorber.

(iv) Precision balances containing not more than 37 MBq (1 millicurie) of hydrogen-3 per balance or not more than 18.5 MBq (0.5 millicurie) of hydrogen-3 per balance part.

(v) Automobile shift quadrants containing not more than 925 MBq (25 millicuries) of hydrogen-3.

(vi) Marine compasses containing not more than 27.8 GBq (750 millicuries) of hydrogen-3 gas and other marine navigational instruments containing not more than 9.25 GBq (250 millicuries) of hydrogen-3 gas.

(vii) Reserved.

(viii) Reserved.

(ix) Electron tubes, provided, that each tube does not contain more than one of the following specified qualities of radioactive material:

(A) 5.55 GBq (150 millicuries) of hydrogen-3 per microwave receiver detector tube or 370 MBq (10 millicuries) of hydrogen-3 per any other electron tube;

(B) 37 kBq (1 mCi) of cobalt-60;

(C) 185 kBq (5 mCi) of nickel-63;

(D) 1.11 MBq (30 mCi) of krypton-85;

(E) 185 kBq (5 mCi) of cesium-137;

(F) 1.11 MBq (30 mCi) of promethium-147;

and, provided further, that the radiation dose rate due to radioactive material contained in each electron tube does not exceed 10 mGy (1 millirad) per hour at one centimeter from any surface when measured through 7 milligrams per square centimeter of absorber.

(x) Ionizing radiation measuring instruments containing, for purposes of internal calibration or standardization, one or more sources of radioactive material, provided that:

(A) each source contains no more than one exempt quantity set forth in Schedule B of this section, and

(B) each instrument contains no more than 10 exempt quantities. For purposes of this requirement, an instrument's source(s) may contain either one or different types of radioactive materials and an individual exempt quantity may be composed of fractional parts of one or more of the exempt quantities in Schedule B of this section, provided that the sum of such fractions shall not exceed unity; and

(C) for the purposes of §175.101(c)(3)(x), 1.85 kBq (0.05 mCi) of americium-241 shall be considered one exempt quantity.

(xi) Reserved.

(xii) The exemptions contained in §175.101(c)(3)(i) through (xi) shall not authorize the application or incorporation of radioactive materials into the listed devices.

(4) Any person, except those who manufacture, process, or produce self-luminous products containing hydrogen-3, krypton-85, or promethium-147, is exempt from the provisions of this Code to the extent that such person receives, possesses, uses, transfers, owns, or acquires hydrogen-3, krypton-85 or promethium-147 in self-luminous products manufactured, processed, produced, imported, or transferred in accordance with a specific license issued by the U.S. Nuclear Regulatory Commission pursuant to 10 CFR §32.22, which license authorizes the transfer of the product to persons who are exempt from regulatory requirements. This exemption does not apply to hydrogen-3, krypton-85, or promethium-147 used in products for frivolous purposes or in toys or adorn- ments.

(5) Any person is exempt from the provisions of this Code to the extent that such person receives, possesses, uses, transfers, or owns articles containing less than 3.7 kBq (0.1 mCi) of radium-226 which were acquired prior to October 30, 1986.

(6) Except for persons who manufacture, process, produce, or initially transfer for sale or distribution gas and aerosol detectors containing byproduct material, pursuant to 10 CRF §30.20(a), any person is exempt from the requirements for a license set forth in section 81 of the act and from the regulations in 10 CRF Part 19. 20, and 30 through 36, and 39 to the extent that the person receives, possesses, uses, transfers, owns, or acquires byproduct material in gas and aerosol detectors designed to protect life or property from fires and airborne hazards, and manufactured, processed, produced, or initially transferred in accordance with a specific license issued under 10 CRF §32.26, which license authorizes the initial transfer of the product for use under this section. This exemption also covers gas and aerosol detectors manufactured or distributed before November 30, 2007 in accordance with a specific license issued by a state under comparable provisions to 10 CFR §32.26 authorizing distribution to persons exempt from regulatory requirements.

(i) Gas and aerosol detectors previously manufactured and distributed to general licensees in accordance with a specific license issued by an agreement state shall be considered exempt, provided that the device is labeled in accordance with the specific license authorizing distribution of the generally licensed device, and provided further that they meet requirements equivalent to 10 CFR §32.26.

(d) *Licensees and contractors of the U.S. Department of Energy and U.S. Nuclear Regulatory Commission.* (1) The owner or the person in charge of any radiation installation licensed by the U.S. Department of Energy and/or the U.S. Nuclear Regulatory Commission is exempt from the requirements of this Code provided that such owner or person in charge shall:

(i) afford the Department access to all records which such person is required to maintain pursuant to the U.S. Department of Energy or U.S. Nuclear Regulatory Commission license or contract issued to such person;

(ii) afford the Department opportunity to sample effluents, and to conduct such surveys of levels of radiation and radioactive contamination, as will not substantially interfere with or interrupt for any substantial period of time any activity licensed by or contracted for by the U.S. Department of Energy or U.S. Nuclear Regulatory Commission; and

(iii) afford inspectors or officers of the Department access to any installation in which such radioactive materials are present to accomplish the foregoing review of records, sampling of effluents, and conduct of surveys.

(2) Any U.S. Department of Energy or U.S. Nuclear Regulatory Commission contractor or subcontractor of the following categories operating within the City is exempt from the requirements of this Code to the extent that such contractor, or subcontractor under such contractor, transfers, receives, possesses, uses or acquires sources of radiation:

(i) prime contractors performing work for the U.S. Department of Energy at United States government-owned or controlled sites including the transportation of sources of radiation to or from such sites and the performance of contract services during temporary interruptions of such transportation;

(ii) prime contractors of the U.S. Department of Energy performing research in, or development, manufacture, storage, testing, or transportation of, atomic weapons or components thereof;

(iii) prime contractors of the U.S. Department of Energy using or operating nuclear reactors or other nuclear devices in a United States-owned vehicle or vessel; and

(iv) any other prime contractor or subcontractor of the U.S. Department of Energy or of the U.S. Nuclear Regulatory Commission when the City and the U.S. Nuclear Regulatory Commission jointly determine:

(A) that the exemption of the prime contractor or subcontractor is authorized by law; and

(B) that under the terms of the contract or subcontract, there is adequate assurance that the work thereunder can be accomplished without undue risk to the public health and safety.

(e) *General requirements for issuing specific licenses.* (1) The Department will approve an application for, and issue in response thereto, a specific license to receive, produce, possess, use and transfer any radioactive material, if the Department determines that the following requirements have been met:

(i) the applicant's proposed use, equipment, facilities and procedures will protect health and safety and will minimize danger to life and property from radiation hazards; and

(ii) the applicant's radiation detection and measuring instrumentation is appropriate for the radioactive materials and uses thereof requested in the application; and

(iii) the applicant, or the applicant's personnel, if the applicant is not an individual, is qualified by training and experience to use such radioactive material for the purposes covered by the application so as to protect public health and safety and to minimize danger to life and property from radiation hazards; and

(iv) the applicant submits sufficient information to support a determination that the requirements of §175.101(e)(1)(i) through (iii) are satisfied.

(f) *Applications for specific licenses.* (1) A license application shall be made in writing on forms prescribed by the Department and shall contain completely and accurately the information required thereon. Such application shall be filed in duplicate (original plus one copy) and may incorporate, by clear specific reference, information contained in any previous application, supplementary statement, notification or report filed with the Department.

(2) Each application or supplementary statement shall be signed by either the applicant personally or a person duly authorized by the applicant to sign for and on the applicant's behalf.

(3) An application for a specific license to use byproduct material in the form of a sealed source in a device that contains a sealed source must:

(i) Identify the source or device by manufacturer and model number as registered with the U.S. Nuclear Regulatory Commission under 10 CFR §32.210, with an agreement state, or for a source or device containing radium-226 or accelerator-produced radioactive material with a state under provisions comparable to 10 CFR §32.210;

(ii) Contain information identified in 10 CFR §32.210(c); or

(iii) For sources or devices containing naturally occurring or accelerator-produced radioactive material manufactured prior to November 30, 2007 that are not registered with the U.S. Nuclear Regulatory Commission under 10 CFR §32.210 or with an agreement state, and for which the applicant is unable to provide all categories of information specified in 10 CFR §32.210(c), the applicant must provide:

(A) All available information identified in 10 CFR §32.210(c) concerning the source, and, if applicable, the device; and

(B) Sufficient additional information to demonstrate that there is reasonable assurance that the radiation safety properties of the source or device are adequate to protect health and minimize danger to life and property. Such information must include a description of the source or device, a description of the radiation safety features, the intended use and associated operating experience, and the results of a recent leak test.

(4) An application from a medical facility, educational institution, or federal facility to produce Positron Emission Tomography (PET) radioactive drugs for noncommercial transfer to licensees in its consortium authorized for medical use under 10 CFR Part 35 or equivalent agreement state requirements, shall include:

(i) A request for authorization for the production of PET radionuclides or evidence of an existing license issued under 10 CFR Part 30 or agreement state requirements for a PET radionuclide production facility within its consortium from which it receives PET radionuclides;

(ii) Evidence that the applicant is qualified to produce radioactive drugs for medical use by meeting one of the criteria in 10 CFR §32.72(a)(2);

(iii) Identification of any individual authorized to prepare the PET radioactive drugs if the applicant is a pharmacy, and documentation that any such individual meets the requirements of an authorized nuclear pharmacist as specified in 10 CFR § 32.72(b)(2); and

(iv) Information identified in 10 CFR § 32.72(a)(3) on the PET drugs to be noncommercially transferred to members of its consortium..

(5) A single application may apply for a license covering more than one radioactive material.

(6) Specific licenses issued by the Department shall be in the form of a written authorization permitting possession of certain specific radioactive materials in not more than certain specific

quantities, and certain specific uses of these radioactive materials. Such possession and use of radioactive materials provided for in the foregoing shall be subject to the requirements of:

(i) all applicable provisions of this Code; and

(ii) all conditions as stated on the license issued by the Department.

(g) *Amendments.* (1) When a change affecting the licensed operation or facility is considered by a licensee, including but not limited to changes ordered pursuant to this Code, so that the information on file with the Department, either in the initial license application or subsequent requests for amendments, or in the initial license or amendment previously granted, will no longer be accurate, the licensee shall request and receive an amendment for such change prior to causing such change.

(2) Any application by a licensee for a license amendment to conform with the provisions of §175.101(g)(1) shall be filed in writing with the Department and shall set forth in detail the reasons for such requested amendment. In considering any such application for amendment, the Department shall apply the requirements set forth in §175.101(e).

(3) A corrective amendment of any license may be issued by the Department at any time upon its initiative.

(4) Any license may be amended or revoked by the Department by reason of the amendment of this Code, or any other applicable law.

(h) *Expiration, renewal and termination of licenses.* (1) Except as otherwise provided in this Code, each license shall expire at the end of the day on the expiration date stated in the license. If, not less than 30 days prior to such expiration date, a licensee duly files with the Department an application in proper form for license renewal, or for a new and superseding license, the existing license shall not be deemed to have expired until the Department has finally determined such application.

(2) Any application by a licensee for the renewal of such license, including amendments, shall be considered as an application for a license and shall be filed on, and shall contain completely and accurately all information called for by, a written form or other manner prescribed by the Department. In considering any such application for renewal, the Department shall apply the requirements set forth in §175.101(e).

(3) Each licensee shall notify the Department in writing and request termination of the license when the licensee decides to terminate all activities authorized under the license. This notification and request for termination shall include the reports and information specified in §175.101(h)(4)(v) and a plan for completion of decommissioning.

(4) If a licensee does not submit an application for renewal pursuant to §175.101(h)(1), the licensee shall on or before the expiration date stated in the license:

(i) terminate use of radioactive material;

(ii) dispose of all radioactive material in accordance with all applicable regulations in effect at the time of disposal;

(iii) submit a written certification of the disposition of all radioactive materials authorized by the license on forms prescribed by the Department;

(iv) remove radioactive contamination to the extent practicable; and

(v) conduct a radiation survey of the premises where the licensed activities were carried out and submit a report of the results of this survey to the Department. Such survey shall be subject to confirmation by the Department and shall include:

(A) levels of radiation in units (or multiples) of Gy-hr^{-1} (millirads-hr^{-1}) at one (1) cm for beta-gamma radiation or at one (1) m for gamma radiation;

(B) levels of removable and fixed contamination, including alpha, in units of disintegrations (transformations) per min (becquerels) per 100 cm^2 for surfaces;

(C) becquerels-ml^{-1} (mCi-ml^{-1}) for water;

(D) becquerels-g^{-1} (pCi-ml^{-1}) for solids such as soil or concrete; and

(E) a description of the survey or other measuring instrument(s) used, including manufacturer(s) and model number(s) and date of most recent calibration.

(vi) If the information submitted pursuant to §175.101(h)(4)(v) does not adequately demonstrate that the premises are suitable for unrestricted use, the Department shall inform the licensee of the appropriate further actions required for the termination of the license, including, but not limited to, decontamination of the licensed premises to such levels and within such time frames as the Department may prescribe.

(vii) Each specific license shall continue in effect, beyond the expiration date if necessary, with respect to possession of residual radioactive materials present as contamination until the Department issues an amendment terminating the license. During this time the licensee shall:

(A) limit activities involving radioactive material to those related to decommissioning; and

(B) continue to control entry to restricted areas until the Department determines they are suitable for release for unrestricted use and the Department issues an amendment terminating the license.

(viii) The Department will approve a request for termination of a specific license, and issue an amendment terminating such license, when the Department determines that:

(A) radioactive material has been properly disposed; and

(B) premises have been decontaminated to such levels that the total effective dose equivalent (TEDE) from residual radioactivity distinguishable from background radiation, to an average member of the public will not exceed 25 mrem (0.25 mSv) per year;

(C) a radiation survey has been performed which describes all radiation levels and levels of fixed and removable contamination; and

(D) the licensee submits sufficient information to support a determination that the requirements of §175.101(h)(4)(viii)(A) through (C) have been met.

(i) *Amendment, suspension or revocation of licenses.* (1) Specific and general licenses shall be subject to amendment, suspension or revocation by reason of amendment of the New York State Public Health Law, enactment or amendment of any other applicable law, amendment of the New York State Sanitary Code, amendment of this Code, or amendment or promulgation of any other applicable rule, regulation or order.

(2) In addition to the provisions of §5.17 of this Code, the Department may amend, revoke or suspend any license, in whole or in part, for:

(i) Any material misstatement in the application therefor or in any supplementary statement thereto.

(ii) Any condition revealed by such application, supplementary statement, report, record, inspection or other means, which would warrant the Department's refusal to grant a license on an original application.

(iii) Any violation or failure to observe any condition of such license, this Code, or any other applicable rule, regulation or law now or hereafter in effect.

(iv) Failure to notify the Department of a change in ownership or address of a radiation installation.

(j) *Emergency response plan.* (1) Each application for a license to possess radioactive materials in unsealed form, on foils or plated sources, or sealed in glass and in excess of the quantities specified in Schedule C of this section shall include either:

(i) an evaluation showing that the maximum dose to a person offsite due to a release of radioactive materials would not exceed 10 mSv (1 rem) effective dose equivalent or 50 mSv (5 rem) to the thyroid; or

(ii) an emergency plan for responding to a release of radioactive material.

(2) One or more of the following factors may be used to support an evaluation submitted pursuant to §175.101(j)(1)(i):

(i) The radioactive material is physically separated so that only a portion could be involved in an accident.

(ii) All or part of the radioactive material is not subject to release during an accident because of the way it is stored or packaged.

(iii) The release fraction in the respirable size range would be lower than the release fraction shown in Schedule C of this section due to the chemical or physical form of the material.

(iv) The solubility of the radioactive material would reduce the dose received.

(v) Facility design or engineered safety features in the facility would cause the release fraction to be lower than that shown in Schedule C of this section.

(vi) Operating restrictions or procedures would prevent a release fraction as large as that shown in Schedule C of this section.

(vii) Other factors appropriate for the specific facility.

(3) An emergency plan for responding to a release of radioactive material submitted pursuant to §175.101(j)(1)(ii) shall include the following information:

(i) A brief description of the licensee's facility and area near the site.

(ii) An identification of each type of radioactive materials accident for which protective actions may be needed.

(iii) A classification system for classifying accidents as alerts or site area emergencies.

(iv) Identification of the means of detecting each type of accident in a timely manner.

(v) A brief description of the means and equipment for mitigating the consequences of each type of accident, including those provided to protect workers onsite, and a description of the program for maintaining the equipment.

(vi) A brief description of the methods and equipment to assess releases of radioactive materials.

(vii) A brief description of the responsibilities of licensee personnel should an accident occur, including identification of personnel responsible for promptly notifying offsite response organizations and the Department.

(viii) A brief description of the responsibilities for developing, maintaining and updating the plan.

(ix) A commitment to, and brief description of, the means to promptly notify offsite response organizations and to request offsite assistance, including medical assistance for the treatment of contaminated injured onsite workers when appropriate. A control point must be established. The notification and coordination must be planned so that unavailability of some personnel, parts of the facility, and some equipment will not prevent the notification and coordination. The licensee shall also commit to notify the Department immediately after notification of the appropriate offsite response organizations and not later than one (1) hour after the licensee declares an emergency.

(x) A brief description of the types of information on facility status, radioactive releases, and recommended protective actions, if necessary, to be given to offsite response organizations and the Department.

(xi) A brief description of the frequency, performance objectives and plans for the training that the licensee will provide workers on how to respond to an emergency including any special instructions and orientation tours the licensee would offer to fire, police, medical and other emergency personnel. The training shall familiarize personnel with site-specific emergency procedures. The training shall thoroughly prepare site personnel for their responsibilities in the event of accident scenarios postulated as most probable for the specific site, including the use of team training for such scenarios.

(xii) A brief description of the means of restoring the facility to a safe condition after an accident.

(xiii) Provisions for conducting quarterly communications checks with offsite response organizations and biennial onsite exercises to test response to simulated emergencies. Quarterly communications checks with offsite response organizations must include the check and update of all necessary telephone numbers. The licensee shall invite offsite response organizations to participate in the biennial exercises. Participation of offsite response organizations is recommended, but not required. Exercises must use accident scenarios postulated as most probable for the specific site and the scenarios shall not be known to most exercise participants. The licensee shall critique each exercise using individuals not having direct implementation responsibility for the plan. Critiques of exercises must evaluate the appropriateness of the plan, emergency procedures, facilities, equipment, training of personnel and overall effectiveness of the response. Plan deficiencies identified in the critiques shall be corrected.

(xiv) A certification that the applicant has met its responsibilities under the Emergency Planning and Community Right-to-Know Act of 1986 codified at 42 USCA 11001 *et seq.,* if applicable to the applicant's activities at the proposed place of use of the radioactive materials.

(4) The licensee shall allow the offsite response organizations expected to respond in case of an accident sixty (60) days to comment on the licensee's emergency response plan before submitting it to the Department. The licensee shall provide any comments received within the sixty (60) days to the Department with the plan.

(k) *Conditions of specific licenses.* (1) Each of the following is hereby made a condition of each specific license:

(i) The licensee thereunder shall comply with all applicable provisions of the New York State Public Health Law, all applicable provisions of this Code, all other laws now or hereafter in effect, and with all applicable rules, regulations, codes and orders now or hereafter in effect of the Department and of all appropriate regulatory agencies.

(ii) Neither such license, nor any right, title or interest in, of or to such license, shall be disposed of by assignment, transfer or otherwise, either voluntarily or involuntarily, either directly or indirectly, unless the Department shall, after securing complete and accurate pertinent information, have approved in writing of such disposal.

(iii) The licensee shall confine the possession and use of radioactive material to such location or locations and for such purpose or purposes as the license may authorize; provided, however, that except as otherwise provided in such license or this Code, such license shall be deemed to authorize the licensee to transfer the material covered by such license to any other person authorized to receive it by the Department, the U.S. Nuclear Regulatory Commission or an agreement state.

(iv) No person, in any advertisement, expressly or by implication, shall refer to the fact that an installation is licensed by the Department, and no person shall state or imply that an installation or its activities have been approved by the Board of Health, the Department or the Commissioner.

(v) The licensee shall notify the Department, in writing, within thirty (30) days if an authorized user, radiation safety officer or radiation therapy physicist permanently discontinues performance of duties under the license.

(vi) Each licensee shall notify the Department, in writing, immediately following the filing of a voluntary or involuntary petition for bankruptcy under any chapter of Title 11 (Bankruptcy) of the United States Code by or against:

(A) the licensee;

(B) an entity (as that term is defined in 11 U.S.C. §101(14)) controlling the licensee or listing the license or licensee as property of the estate; or

(C) an affiliate (as that term is defined in 11 U.S.C. §101(2)) of the licensee.

This notification must indicate:

(A) the bankruptcy court in which the petition for bankruptcy was filed; and

(B) the date of the filing of the petition.

(vii) Any license covering the use of special nuclear material, in the course of which licensed use additional special nuclear material is produced, shall be deemed to cover any such special nuclear material so produced, provided however, that the total quantity of special nuclear material possessed by the licensee is not sufficient to form a critical mass.

(viii) A licensee, employee of a licensee, contractor, subcontractor, or employee of a contractor or subcontractor shall not:

(A) engage in a deliberate misconduct that causes or would have caused if not detected, a licensee or applicant to be in violation of any provision of this Code or license condition issued by the Department; or

(B) deliberately submit to the Department information that the person submitting the information knows to be incomplete or inaccurate in some respect to the Department.

(ix) (A) Authorization under 10 CFR §30.32(j) to produce Positron Emission Tomography (PET) radioactive drugs for noncommercial transfer to medical use licensees in its consortium does not relieve the licensee from complying with applicable FDA, Federal, and State requirements governing radioactive drugs.

(B) Each licensee authorized under 10 CFR §30.32(j) to produce PET radioactive drugs for noncommercial transfer to medical use licensees in its consortium shall:

(*a*) Satisfy the labeling requirements in 10 CFR § 32.72(a)(4) for each PET radioactive drug transport radiation shield and each syringe, vial, or other container used to hold a PET radioactive drug intended for noncommercial distribution to members of its consortium; and

(*b*) Possess and use instrumentation to measure the radioactivity of the PET radioactive drugs intended for noncommercial distribution to members of its consortium and meet the procedural, radioactivity measurement, instrument test, instrument check, and instrument adjustment requirements in 10 CFR § 32.72(c).

(C) A licensee that is a pharmacy authorized under 10 CFR §30.32(j) to produce PET radioactive drugs for noncommercial transfer to medical use licensees in its consortium shall require that any individual that prepares PET radioactive drugs : (*a*) an authorized nuclear pharmacist who meets the requirements in 10 CFR § 32.72(b)(2); or (*b*) an individual under the supervision of an authorized nuclear pharmacist as specified in 10 CFR § 35.27.

(D) A pharmacy, authorized under 10 CFR §30.32(j) to produce PET radioactive drugs for noncommercial transfer to medical use licensees in its consortium that allows an individual to work as an authorized nuclear pharmacist, shall meet the requirements of 10 CFR § 32.72(b)(5). All reports and notifications required by 10 CFR § 32.72(b)(5) shall be provided to the Department.

(x) Each licensee preparing technetium-99m radiopharmaceuticals from molybdenum-99/technetium-99m generators or rubidium-82 from strontium-82/rubidium-82 generators shall test the generator eluates for molybdenum-99 breakthrough or strontium-82 and strontium-85 contamination, respectively, in accordance with 10 CFR § 35.204. The licensee shall record the results of each test and retain each record for 3 years after the record is made.

(2) The Department may at any time set forth in any license or incorporate by reference therein, additional conditions, restrictions or requirements applicable to the licensee's receipt, production, possession, use or transfer of radioactive material covered by such license in order to protect the public health and safety and to minimize danger to life and property from radiation hazards.

(3) All licensees subject to the criteria to implement Increased Controls pursuant to the U.S. Nuclear Regulatory Commission (NRC) Order EA 05-090, 70 FR 72128, dated December 1, 2005, shall have as part of their Increased Control Program, a Fingerprinting and Criminal History Records Check procedure established for all individuals whom the licensee wishes to allow unescorted access to radioactive material quantities of concern. Such Fingerprinting and Criminal History Records Check procedures shall adhere to the requirements in NRC Order EA-07-305, 72 FR 70901, or any successor order, law or regulation. The requirements of this provision shall apply to all affected licensees upon its effective date.

(l) *Transfer of radioactive materials.* (1) No licensee shall transfer radioactive material except as authorized pursuant to this subsection.

(2) Except as provided otherwise by the license, and subject to the provisions of §175.101(l)(3) and (4), a licensee may transfer radioactive material:

(i) to the Department, after receiving prior written approval of the Department;

(ii) to the U.S. Nuclear Regulatory Commission;

(iii) to any person exempt from the provisions of this Code to the extent permitted under such exemption;

(iv) to any person authorized to receive radioactive material under the terms of a general license or its equivalent, or a specific license or equivalent licensing document, issued by the Department, the U.S. Nuclear Regulatory Commission, or an agreement state, or to any person otherwise authorized to receive radioactive material by the federal government or any agency thereof, the department, or an agreement state; or

(v) as otherwise authorized by the Department in writing.

(3) Before transferring radioactive material to a specific licensee of the Department, the U.S. Nuclear Regulatory Commission or an agreement state, or to a general licensee who is required to register with the Department, the U.S. Nuclear Regulatory Commission or an agreement state prior to the receipt of the radioactive materials, the licensee transferring the radioactive material shall verify that the transferee's license or registration certificate authorizes the receipt of the type, form and quantity of radioactive material to be transferred.

(4) The following methods for the verification required by §175.101(l)(3) are acceptable:

(i) the transferor may have in his/her possession, and read, a current copy of the transferee's specific license or registration certificate; or

(ii) the transferor may have in his/her possession a written certification by the transferee that he/she is authorized by license or registration certificate to receive the type, form and quantity of radioactive material to be transferred, specifying the license or registration certificate number, issuing agency and expiration date; or

(iii) for emergency shipments the transferor may accept oral certification by the transferee that he is authorized by license or registration certificate to receive the type, form, and quantity of radioactive material to be transferred, specifying the license or registration certificate number, issuing agency and expiration date, provided that the oral certification is confirmed in writing within 10 days; or

(iv) the transferor may obtain other sources of information compiled by a reporting service from official records of the Department, the U.S. Nuclear Regulatory Commission or an agreement state as to the identity of licensees and the scope and expiration dates of licenses and registrations; or

(v) when none of the methods of verification described in §175.101(l)(4)(i) through (iv) are readily available, or when a transferor desires to verify that information received by one of such methods is correct or up-to-date, the transferor may obtain and record confirmation from the Department, the U.S. Nuclear Regulatory Commission, or an agreement state that the transferee is licensed to receive the radioactive material.

(5) Preparation for shipment and transport of radioactive material shall be in accordance with the provisions of §175.105 of this Code.

(m) *Reciprocity.* (1) The holder of a license issued by the New York State Department of Labor, the New York State Department of Health, the U.S. Nuclear Regulatory Commission or any agreement state, may bring, possess or use radioactive material covered by such license within the Department's jurisdiction for a period not in excess of 30 days in any twelve consecutive months without obtaining a license from the Department, provided that:

(i) such license does not limit the holder's possession or use of such material to a specific installation or installations;

(ii) such holder, prior to bringing such material into the city, files with the Department a notice indicating the period, type and location of proposed possession and use within the Department's jurisdiction, and a copy of the license;

(iii) such holder supplies such additional information as the Department may reasonably request;

(iv) such holder, during the period of this possession and use of such material within the city, complies with all applicable sections of this Code except §175.101(a)(1); and

(v) such holder, during such period, complies with all the terms and conditions of his license, except such terms or conditions which may be inconsistent with this Code.

(2) The holder of a license issued by the New York State Department of Labor, the New York State Department of Health, the New York City Department of Health and Mental Hygiene or an Agreement State must obtain reciprocity approval from the U.S. Nuclear Regulatory Commission to conduct licensed activity in areas of exclusive federal jurisdiction within New York City. At least three days before engaging in each activity for the first time in a calendar year, the licensee will provide the U.S. Nuclear Regulatory Commission with advanced notice of its proposed activity in areas under exclusive federal jurisdiction within New York City.

(n) *Financial assurance and recordkeeping for decommissioning.*

(1)(a) Each applicant for a specific license authorizing the possession and use of unsealed radioactive material of half-life greater than 120 days and in quantities exceeding 10^5 times the

applicable quantities set forth in Appendix B to this section shall submit a decommissioning funding plan as described in §175.101(n)(5). The decommissioning funding plan must also be submitted when a combination of isotopes is involved if R divided by 10^5 is greater than one (1) (unity rule), where R is defined here as the sum of the ratios of the quantity of each isotope to the applicable value in Appendix B to this section.

(b) Each holder of, or applicant for, any specific license authorizing the possession and use of sealed sources or plated foils of half-life greater than 120 days and in quantities exceeding 10 times the applicable quantities set forth in Appendix B to this section shall submit a decommissioning funding plan as described in §175.101(n)(5). The decommissioning funding plan must also be submitted when a combination of isotopes is involved if R, as defined in §175.101(n)(1)(a), divided by 10^{12} is greater than one (1) (unity rule). The decommissioning funding plan must be submitted to the Department within 2 years of the effective date of this provision.

(c) Each applicant for a specific license authorizing the possession and use of more than 100 mCi of source material in a readily dispersible form shall submit a decommissioning funding plan as described in §175.101(n)(5).

(d) Each applicant for a specific license authorizing possession and use of quantities of source material greater than 10 mCi but less than or equal to 100 mCi in a readily dispersible form shall either:

(i) submit a decommissioning funding plan as described in §175.101(n)(5); or

(ii) submit a certification that financial assurance for decommissioning has been provided in the amount of $225,000 within eighteen months of the effective date of this provision using one of the methods described in §175.101(n)(6). For an applicant, this certification may state that the appropriate assurance will be obtained after the application has been approved and the license issued but before the receipt of licensed material. If the applicant defers execution of the financial instrument until after the license has been issued, a signed original of the financial instrument obtained to satisfy the requirements of paragraph §175.101(n)(6) of this section must be submitted to the Department prior to receipt of licensed material. If the applicant does not defer execution of the financial instrument, the applicant shall submit to the Department as part of the certification, a signed original of the financial instrument obtained to satisfy the requirements of paragraph §175.101(n)(6) of this section.

(e) Each applicant for a specific license authorizing the possession and use of unsealed special nuclear material in quantities exceeding 10^5 times the applicable quantities set forth in Appendix B to this section shall submit a decommissioning funding plan as described in §175.101(n)(5). A decommissioning funding plan must also be submitted when a combination of isotopes is involved if R, as defined in §175.101(n)(1)(a), divided by 10^5 is greater than one (1) (unity rule).

(2) Each applicant for a specific license authorizing possession and use of radioactive material of half-life greater than 120 days and in quantities specified in §175.101(n)(4) shall either:

(i) submit a decommissioning funding plan as described in §175.101(n)(4); or

(ii) submit a certification that financial assurance for decommissioning has been provided in the amount prescribed by §175.101(n)(4) using one of the methods described in §175.101(n)(6). For an applicant, this certification may state that the appropriate assurance will be obtained after the application has been approved and the license issued but before the receipt of licensed material. If the applicant defers execution of the financial instrument until after the license has been issued, a signed original of the financial instrument obtained to satisfy the requirements of paragraph §175.101(n)(6) of this section must be submitted to the Department prior to receipt of

licensed material. If the applicant does not defer execution of the financial instrument, the applicant shall submit to the Department as part of the certification, a signed original of the financial instrument obtained to satisfy the requirements of paragraph §175.101(n)(6) of this section.

(3) (i) Each holder of a specific license issued on or after July 27, 1990, which is of a type described in §175.101(n)(1) or (2), shall provide financial assurance for decommissioning in accordance with the criteria set forth in this section.

(ii) Each holder of a specific license issued before July 27, 1990, and of a type described in §175.101(n)(1) or (2), shall submit a decommissioning funding plan as described in §175.101(n)(5) or a certification of financial assurance for decommissioning in an amount at least equal to $1,125,000 in accordance with the criteria set forth in this section. If the licensee submits the certification of financial assurance rather than a decommissioning funding plan, the licensee shall include a decommissioning funding plan in any application for license renewal.

(iii) Each holder of a specific license issued before July 27, 1990, and of a type described in §175.101(n)(2), shall submit a certification of financial assurance for decommissioning or a decommissioning funding plan in accordance with the criteria set forth in this section.

(4) Table of required amounts of financial assurance for decommissioning by quantity of material. Licensees required to submit the $1,125,000 amount must do so within 1 year of the effective date of this provision. Licensees required to submit the $113,000 or $225,000 amount must do so within 18 months of the effective date of this provision. Licensees having possession limits exceeding the upper bounds of this table must base financial assurance on a decommissioning funding plan.

(i) Greater than 10^4 but less than or equal to 10^5 times the applicable quantities of Appendix B to this section in unsealed form (for a combination of isotopes, if R, as defined in §175.101(n)(1)(a), divided by 10^4 is greater than 1, but R divided by 10^5 is less than or equal to 1)—$1,125,000.

(ii) Greater than 10^3 but less than or equal to 10^4 times the applicable quantities of Appendix B to this section in unsealed form (for a combination of isotopes, if R, as defined in §175.101(n)(1)(a), divided by 10^3 is greater than 1, but R divided by 10^4 is less than or equal to 1)—$225,000.

(iii) Greater than 10^{10} but less than or equal to 10^{12} times the applicable quantities of Appendix B to this section in sealed sources or plated foils (for a combination of isotopes, if R, as defined in §175.101(n)(1)(a), divided by 10^{10} is greater than 1, but R divided by 10^{12} is less than or equal to 1)—$113.000.

(5) Each decommissioning funding plan must contain a cost estimate for decommissioning and a description of the method of assuring funds for decommissioning from §175.101(n)(6), including means of adjusting cost estimates and associated funding levels periodically over the life of the facility. Cost estimates must be adjusted at intervals not to exceed 3 years. The decommissioning funding plan must also contain a certification by the licensee that financial assurance for decommissioning has been provided in the amount of the cost estimate for decommissioning and a signed original of the financial instrument obtained to satisfy the requirements of §175.101(n)(6).

(6) Financial assurance for decommissioning must be provided by one or more of the following methods:

(i) *Prepayment.* Prepayment is the deposit prior to the start of operation into an account segregated from licensee assets and outside the licensee's administrative control of cash or liquid

assets such that the amount of funds would be sufficient to pay decommissioning costs. Prepayment may be in the form of a trust, escrow account, government fund, certificate of deposit, or deposit of government securities.

(ii) *A surety method, insurance, or other guarantee method.* These methods guarantee that decommissioning costs will be paid. A surety method may be in the form of a surety bond, letter of credit, or line of credit. A parent company guarantee of funds for decommissioning costs based on a financial test may be used if the guarantee and test are as contained in Appendix D. A parent company guarantee may not be used in combination with other financial methods to satisfy the requirements of this section. A guarantee of funds by the applicant or licensee for decommissioning costs based on a financial test may be used if the guarantee and test are as contained in Appendix E. A guarantee by the applicant or licensee may not be used in combination with any other financial methods to satisfy the requirements of this section or in any situation where the applicant or licensee has a parent company holding majority control of the voting stock of the company. Any surety method or insurance used to provide financial assurance for decommissioning must contain the following conditions:

(A) the surety method or insurance must be open-ended or, if written for a specified term, such as five years, must be renewed automatically unless 90 days or more prior to the renewal date, the issuer notifies the Department, the beneficiary, and the licensee of its intention not to renew. The surety method or insurance must also provide that the full face amount be paid to the beneficiary automatically prior to the expiration without proof of forfeiture if the licensee fails to provide a replacement acceptable to the Department within 30 days after receipt of notification of cancellation.

(B) The surety method or insurance must be payable to a trust established for decommissioning costs. The trustee and trust must be acceptable to the Department. An acceptable trustee includes an appropriate state or federal government agency or an entity which has the authority to act as a trustee and whose trust operations are regulated and examined by a federal or state agency.

(C) The surety method or insurance must remain in effect until the Department has terminated the license.

(iii) An external sinking fund in which deposits are made at least annually, coupled with a surety method or insurance, the value of which may decrease by the amount being accumulated in the sinking fund. An external sinking fund is a fund established and maintained by setting aside funds periodically in an account segregated from licensee assets and outside the licensee's administrative control in which the total amount of funds would be sufficient to pay decommissioning costs at the time termination of operation is expected. An external sinking fund may be in the form of a trust, escrow account, government fund, certificate of deposit, or depost of government securities. The surety or insurance provisions must be as stated in §175.101(n)(6)(ii).

(iv) In the case of federal, state or local government licensees, a statement of intent containing a cost estimate for decommissioning or an amount based on the Table in §175.101(n)(4), and indicating that funds for decommissioning will be obtained when necessary.

(7) Each licensed person shall keep records of information important to the safe and effective decommissioning of the facility in an identified location until the license is terminated by the Department and the site is released for unrestricted use. If records of relevant information are kept for other purposes, reference to these records and their location may be used. Information the Department considers important to decom- missioning consists of:

(i) Records of spills or other unusual occurrences involving the spread of contamination in and around the facility, equipment or site. These records may be limited to instances when contamination remains after any cleanup procedures or when there is reasonable likelihood that contaminants may have spread to inaccessible areas as in the case of possible seepage into porous materials such as concrete. These records must include any known information on identification of involved nuclides, quantities, forms and concentrations.

(ii) As-built drawings and modifications of structures and equipment in restricted areas where radioactive materials are used and/or stored, and of locations of possible inaccessible contamination such as buried pipes which may be subject to contamination. If required drawings are referenced, each relevant document need not be indexed individually. If drawings are not available, the licensee shall substitute appropriate records of available information concerning these areas and locations.

(iii) Except for areas containing only sealed sources (provided the sources have not leaked or no contamination remains after any leak) or radioactive materials having only half-lives of less than 65 days, a list contained in a single document and updated every two (2) years, of the following:

(A) All areas designated and formerly designated restricted areas as defined in §175.02(a)(194);

(B) all areas outside of restricted areas that require documentation under §175.101(n)(7)(i);

(C) all areas where current and/or previous wastes have been buried; and

(D) all areas outside of restricted areas which contain material such that, if the license expired, the licensee would be required to decontaminate the area to unrestricted release levels or to apply for approval for disposal under §175.104(b).

(iv) Records of the cost estimate performed for the decommissioning funding plan or of the amount certified for decommissioning, and records of the funding method used for assuring funds if either a funding plan or certification is used.

SCHEDULE A

Element (atomic number)	**Isotope**	**Col. I**	**Col. II**
		Gas Concentration µCi/ml[1]	**Liquid and Solid Concentration µCi/ml[2]**
Antimony (51)	Sb 122		3×10^{-4}
	Sb 124		2×10^{-4}
	Sb 125		1×10^{-3}
Argon (18)	A 37	1×10^{-3}	
	A 41	4×10^{-7}	
Arsenic (33)	As 73		5×10^{-3}
	As 74		5×10^{-4}
	As 76		2×10^{-4}

	As 77		8×10^{-4}
Barium (56)	Ba 131		2×10^{-3}
	Ba 140		3×10^{-4}
Beryllium (4)	Be 7		2×10^{-2}
Bismuth (83)	Bi 206		4×10^{-4}
Bromine (35)	Br 82	4×10^{-7}	3×10^{-3}
Cadmium (48)	Cd 109		2×10^{-3}
	Cd 115M		3×10^{-4}
	Cd 115		3×10^{-4}
Calcium (20)	Ca 45		9×10^{-5}
	Ca 47		5×10^{-4}
Carbon (6)	C 14	1×10^{-6}	8×10^{-3}
Cerium (58)	Ce 141		9×10^{-4}
	Ce 143		4×10^{-4}
	Ce 144		1×10^{-4}
Cesium (55)	Cs 131		2×10^{-2}
	Cs 134m		6×10^{-2}
	Cs 134		9×10^{-5}
Chlorine (17)	Cl 38	9×10^{-7}	4×10^{-3}
Chromium (24)	Cr 51		2×10^{-2}
Cobalt (27)	Co 57		5×10^{-3}
	Co 58		1×10^{-3}
	Co 60		5×10^{-4}
Copper (29)	Cu 64		3×10^{-3}
Dysprosium (66)	Dy 165		4×10^{-3}
	Dy 166		4×10^{-4}
Erbium (68)	Er 169		9×10^{-4}
	Er 171		1×10^{-3}
Europium (63)	Eu 152 (T/2=9.2 hrs)		6×10^{-4}
	Eu 155		2×10^{-3}
Fluorine (9)	F 18	2×10^{-6}	8×10^{-3}

Gadolinium (64)	Gd 153		2×10^{-3}
	Gd 159		8 x `0^{-4}
Gallium (31)	Ga 72		4×10^{-4}
Germanium (32)	Ge 71		2×10^{-2}
Gold (79)	Au 196		2×10^{-3}
	Au 198		5×10^{-4}
	Au 199		2×10^{-3}
Hafnium (72)	Hf 181		7×10^{-4}
Hydrogen (1)	H 3	5×10^{-6}	3×10^{-2}
Indium (49)	In 113M		1×10^{-2}
	In 114M		2×10^{-4}
Iodine (53)	I 126	3×10^{-9}	2×10^{-5}
	I 131	3×10^{-9}	2×10^{-5}
	I 132	8×10^{-8}	6×10^{-4}
	I 133	1×10^{-8}	7×10^{-5}
	I 134	2×10^{-7}	1×10^{-3}
Iridium (77)	Ir 190		2×10^{-3}
	Ir 192		4×10^{-4}
	Ir 194		3×10^{-4}
Iron (26)	Fe 55		8×10^{-3}
	Fe 59		6×10^{-4}
Krypton (36)	Kr 85M	1×10^{-6}	
	Kr 85	3×10^{-6}	
Lanthanum (57)	La 140		2×10^{-4}
Lead (82)	Pb 203		4×10^{-3}
Lutetium (71)	Lu 177		1×10^{-3}
Manganese (25)	Mn 52		3×10^{-4}
	Mn 54		1×10^{-3}
	Mn 56		1×10^{-3}
Mercury (80)	Hg 197M		2×10^{-3}
	Hg 197		3×10^{-3}
	Hg 203		2×10^{-4}

Molybdenum (42)	Mo 99		2×10^{-3}
Neodymium (60)	Nd 147		6×10^{-4}
	Nd 149		3×10^{-3}
Nickel (28)	Ni 65		1×10^{-3}
Niobium (Columbium) (41)	Nb 95		1×10^{-3}
	Nb 97		9×10^{-3}
Osmium (76)	Os 185		7×10^{-4}
	Os 191M		3×10^{-2}
	Os 191		2×10^{-3}
	Os 193		6×10^{-4}
Palladium (46)	Pd 103		3×10^{-3}
	Pd 109		9×10^{-4}
Phosphorus (15)	P 32		2×10^{-4}
Platinum (78)	Pt 191		1×10^{-3}
	Pt 193M		1×10^{-2}
	Pt 197M		1×10^{-2}
	Pt 197		1×10^{-3}
Potassium (19)	K 42		3×10^{-3}
Praseodymium (59)	Pr 142		3×10^{-4}
	Pr 143		5×10^{-4}
Promethium (61)	Pm 147		2×10^{-3}
	Pm 149		4×10^{-4}
Rhenium (75)	Re 183		6×10^{-3}
	Re 186		9×10^{-4}
	Re 188		6×10^{-4}
Rhodium (45)	Rh 103M		1×10^{-1}
	Rh 105		1×10^{-3}
Rubidium (37)	Rb 86		7×10^{-4}
Ruthenium (44)	Ru 97		4×10^{-4}
	Ru 103		8×10^{-4}
	Ru 105		1×10^{-3}
	Ru 106		1×10^{-4}

Samarium (62)	Sm 153		8×10^{-4}
Scandium (21)	Sc 46		4×10^{-4}
	Sc 47		9×10^{-4}
	Sc 48		3×10^{-4}
Selenium (34)	Se 75		3×10^{-3}
Silicon (14)	Si 31		9×10^{-3}
Silver (47)	Ag 105		1×10^{-3}
	Ag 110M		3×10^{-4}
	Ag 111		4×10^{-4}
Sodium (11)	Na 24		2×10^{-3}
Strontium (38)	Sr 85		1×10^{-4}
	Sr 89		1×10^{-4}
	Sr 91		7×10^{-4}
	Sr 92		7×10^{-4}
Sulfur (16)	S 35	9 x 10 -8	6×10^{-4}
Tantalum (73)	Ta 182		4×10^{-4}
Technetium (43)	Tc 96M Tc 96		1×10^{-1} 1×10^{-3}
Tellurium (52)	Te 125M		2×10^{-3}
	Te 127M		6×10^{-4}
	Te 127		3×10^{-3}
	Te 129M		3×10^{-4}
	Te 131M		6×10^{-4}
	Te 132		3×10^{-4}
Terbium (65)	Tb 160		4×10^{-4}
Thallium (81)	Tl 200 Tl 201 Tl 202 Tl 204		4×10^{-3} 3×10^{-3} 1×10^{-3} 1×10^{-3}
Thulium (69)	Tm 170 Tm 171		5×10^{-4} 5×10^{-3}
Tin (50)	Sn 113 Sn 125		9×10^{-4} 2×10^{-4}
Tungsten (Wolfram) (74)	W 181		4×10^{-3}

	W 187		7×10^{-4}
Vanadium (23)	V 48		3×10^{-4}
Xenon (54)	Xe 131M	4×10^{-6}	
	Xe 133	3×10^{-6}	
	Xe 135	1×10^{-6}	
Ytterbium (70)	Yb 175		1×10^{-3}
Yttrium (39)	Y 90		2×10^{-4}
	Y 91M		3×10^{-2}
	Y 91		3×10^{-4}
	Y 92		6×10^{-4}
	Y 93		3×10^{-4}
Zinc (30)	Zn 65		1×10^{-3}
	Zn 69M		7×10^{-4}
	Zn 69		2×10^{-2}
Zirconium (40)	Zr 95		6×10^{-4}
	Zr 97		2×10^{-4}
Beta and/or gamma emitting byproduct not listed above with half-life less than three years		1×10^{-10}	1×10^{-6}

Footnotes to Schedule A

1. Values are given only for those materials normally used as gases.
2. µCi/gm for solids.

NOTE 1: Many radioisotopes disintegrate into isotopes which are also radioactive. In expressing the concentrations in Schedule A, the activity stated is that of the parent isotope and takes into account the daughters.

NOTE 2: For purposes of 30.14 where there is involved a combination of isotopes, the limit for the combination should be derived as follows: Determine for each isotope in the product the ratio between the concentration present in the product and the exempt concentration established in Schedule A for the specific isotope when not in combination. The sum of such ratios may not exceed "1" (i.e., unity).

Example:

$$\frac{\text{Concentration of Isotope A in product}}{\text{Exempt concentration of Isotope A}} + \frac{\text{Concentration of Isotope B in product}}{\text{Exempt concentration of Isotope B}} \leq 1$$

SCHEDULE B

EXEMPT QUANTITIES

Byproduct material	Microcuries
Antimony 122 (Sb 122)	100
Antimony 124 (Sb 124)	10
Antimony 125 (Sb 125)	10
Arsenic 73 (As 73)	100
Arsenic 74 (As 74)	10
Arsenic 76 (As 76)	10
Arsenic 77 (as 77)	100
Barium 131 (Ba 131)	10
Barium 133 (Ba 133)	10
Barium 140 (Ba 140)	10
Bismuth 210 (Bi 210)	1
Bromine 82 (Br 82)	10
Cadmium 109 (Cd 109)	10
Cadmium 115m (Cd 115m)	10
Cadmium 115 (Cd 115)	100
Calcium 45 (Ca 45)	10
Calcium 47 (Ca 47)	10
Carbon 14 (C 14)	100
Cerium 141 (Ce 141)	100
Cerium 143 (Ce 143)	100
Cerium 144 (Ce 144)	1
Cesium 129 (Cs 129)	100
Cesium 131 (Cs 131)	1,000

Cesium 134m (Cs 134m)	100
Cesium 134 (Cs 134)	1
Cesium 135 (Cs 135)	10
Cesium 136 (Cs 136)	10
Cesium 137 (Cs 137)	10
Chlorine 36 (Cl 36)	10
Chlorine 38 (Cl 38)	10
Chromium 51 (Cr 51)	1,000
Cobalt 57 (Co 57)	100
Cobalt 58m (Co 58m)	10
Cobalt 58 (Co 58)	10
Cobalt 60 (Co 60)	1
Copper 64 (Cu 64)	100
Dysprosium 165 (Dy 165)	10
Dysprosium 166 (Dy 166)	100
Erbium 169 (Er 169)	100
Erbium 171 (Er 171)	100
Europium 152 9.2 h (Eu 152 9.2 h)	100
Europium 152 13 yr (Eu 152 13 yr)	1
Europium 154 (Eu 154)	1
Europium 155 (Eu 155)	10
Fluorine 18 (F 18)	1,000
Gadolinium 153 (Gd 153)	10
Gadolinium 159 (Gd 159)	100
Gallium 67 (Ga 67)	100
Gallium 72 (Ga 72)	10

Germanium 68 (Ge 68)	10
Germanium 71 (Ge 71)	100
Gold 195 (Au 195)	10
Gold 198 (Au 198)	100
Gold 199 (Au 199)	100
Hafnium 181 (Hf 181)	10
Holmium 166 (Ho 166)	100
Hydrogen 3 (H3)	1,000
Indium 111 (In 111)	100
Indium 113m (In 113m)	100
Indium 114m (In 114m)	10
Indium 115m (In 115m)	100
Indium 115 (In 115)	10
Iodine 123 (I 123)	100
Iodine 125 (I 125)	1
Iodine 126 (I 126)	1
Iodine 129 (I 129)	0.1
Iodine 131 (I 131)	1
Iodine 132 (I 132)	10
Iodine 133 (I 133)	1
Iodine 134 (I 134)	10
Iodine 135 (I 135)	10
Iridium 192 (Ir 192)	10
Iridium 194 (Ir 194)	100
Iron 52 (Fe 52)	10
Iron 55 (Fe 55)	100

Iron 59 (Fe 59)	10
Krypton 85 (Kr 85)	100
Krypton 87 (Kr 87)	10
Lanthanum 140 (La 140)	10
Lutetium 177 (Lu 177)	100
Manganese 52 (Mn 52)	10
Manganese 54 (Mn 54)	10
Manganese 56 (Mn 56)	10
Mercury 197m (Hg 197m)	100
Mercury 197 (Hg 197)	100
Mercury 203 (Hg 203)	10
Molybdenum 99 (Mo 99)	100
Neodymium 147 (Nd 147)	100
Neodymium 149 (Nd 149)	100
Nickel 59 (Ni 59)	100
Nickel 63 (Ni 63)	10
Nickel 65 (Ni 65)	100
Niobium 93m (Nb 93m)	10
Niobium 95 (Nb 95)`	10
Niobium 97 (Nb 97)	10
Osmium 185 (Os 185)	10
Osmium 191m (Os 191)	100
Osmium 191 (Os 191)	100
Osmium 193 (Os 193)	100
Palladium 103 (Pd 103)	100
Palladium 109 (Pd 109)	100

Phosphorus 32 (P 32)	10
Platinum 191 (Pt 191)	100
Platinum 193m (Pt 193m)	100
Platinum 193 (Pt 193)	100
Platinum 197m (Pt 197m)	100
Platinum 197 (Pt 197)	100
Polonium 210 (Po 210)	0.1
Potassium 42 (K 42)	10
Potassium 43 (K 43)	10
Praseodymium 142 (Pr 142)	100
Praseodymium 143 (Pr 143)	100
Promethium 147 (Pm 147)	10
Promethium 149 (Pm 149)	10
Rhenium 186 (Re 186)	100
Rhenium 188 (Re 188)	100
Rhodium 103m (Rh 103m)	100
Rhodium 105 (Rh 105)	100
Rubidium 81 (Rb 81)	10
Rubidium 86 (Rb 86)	10
Rubidium 87 (Rb 87)	10
Ruthenium 97 (Ru 97)	100
Ruthenium 103 (Ru 103)	10
Ruthenium 105 (Ru 105)	10
Ruthenium 106 (Ru 106)	1
Samarium 151 (Sm 151)	10
Samarium 153 (Sm 153)	100

Scandium 46 (Sc 46)	10
Scandium 47 (Sc 47)	100
Scandium 48 (Sc 48)	10
Selenium 75 (Se 75)	10
Silicon 31 (Si 31)	100
Silver 105 (Ag 105)	10
Silver 110m (Ag 110m)	1
Silver 111 (Ag 111)	100
Sodium 22 (Na 22)	10
Sodium 24 (Na 24)	10
Strontium 85 (Sr 85)	10
Strontium 89 (Sr 89)	1
Strontium 90 (Sr 90)	0.1
Strontium 91 (Sr 91)	10
Strontium 92 (Sr 92)	10
Sulphur 35 (S 35)	100
Tantalum 182 (Ta 182)	10
Technetium 96 (Tc 96)	10
Technetium 97m (Tc 97m)	100
Technetium 97 (Tc 97)	100
Technetium 99m (Tc 99m)	100
Technetium 99 (Tc 99)	10
Tellurium 125 m (Te 125 m)	10
Tellurium 127m (Te 127m)	10
Tellurium 127 (Te 127)	100
Tellurium 129m (Te 129m)	10

Tellurium 129 (Te 129)	100
Tellurium 131m (Te 131m)	10
Tellurium 132 (Te 132)	10
Terbium 160 (Tb 160)	10
Thallium 200 (Tl 200)	100
Thallium 201 (Tl 201)	100
Thallium 202 (Tl 202)	100
Thallium 204 (Tl 204)	10
Thulium 170 (Tm 170)	10
Thulium 171 (Tm 171)	10
Tin 113 (Sn 113)	10
Tin 125 (Sn 125)	10
Tungsten 181 (W 181)	10
Tungsten 185 (W 185)	10
Tungsten 187 (W 187)	100
Vanadium 48 (V 48)	10
Xenon 131m (Xe 131m)	1,000
Xenon 133 (Xe 133)	100
Xenon 135 (Xe 135)	100
Ytterbium 175 (Yb 175)	100
Yttrium 87 (Y 87)	10
Yttrium 88 (Y 88)	10
Yttrium 90 (Y 90)	10
Yttrium 91 (Y91)	10
Yttrium 92 (Y92)	100
Yttrium 93 (Y93)	100

Zinc 65 (Zn 65)	10
Zinc 69m (Zn 69m)	100
Zinc 69 (Zn 69)	1,000
Zirconium 93 (Zr 93)	10
Zirconium 95 (Zr 95)	10
Zirconium 97 (Zr 97)	10
Any byproduct material not listed above other than alpha emitting byproduct materials	0.1

SCHEDULE C

QUANTITIES OF RADIOACTIVE MATERIALS REQUIRING CONSIDERATION OF THE NEED FOR AN EMERGENCY PLAN FOR RESPONDING TO A RELEASE.

Radioactive material[1]	Release fraction	Quantity (curies)
Actinium-228	0.001	4,000
Americium 241	.001	2
Americium-242	.001	2
Americium-243	.001	2
Antimony-124	.01	4,000
Antimony-126	.01	6,000
Barium-133	.01	10,000
Barium-140	.01	30,000
Bismuth-207	.01	5,000
Bismuth-210	.01	600
Cadmium-109	.01	1,000
Cadmium-113	.01	80
Calcium-45	.01	20,000
Californium-252	.001	9 (20 mg)
Carbon-14 (non-carbon dioxide)	.01	50,000
Cerium-141	.01	10,000

Cerium-144	.01	300
Cesium-134	.01	2,000
Cesium-137	.01	3,000
Chlorine-36	.5	100
Chromium-51	.01	300,000
Cobalt-60	.001	5,000
Copper-64	.01	200,000
Curium-242	.001	60
Curium-243	.001	3
Curium-244	.001	4
Curium-245	.001	2
Europium-152	.01	500
Europium-154	.01	400
Europium-155	.01	3,000
Germanium-68	.01	2,000
Gadolinium-153	.01	5,000
Gold-198	.01	30,000
Hafnium-172	.01	400
Hafnium-181	.01	7,000
Holmium-166m	.01	100
Hydrogen-3	.5	20,000
Iodine-125	.5	10
Iodine-131	.5	10
Indium-114m	.01	1,000
Iridium-192	.001	40,000
Iron-55	.01	40,000
Iron-59	.01	7,000
Krypton-85	1.0	6,000,000
Lead-210	.01	8
Manganese-56	.01	60,000
Mercury-203	.01	10,000
Molybdenum-99	.01	30,000

Neptunium-237	.001	2
Nickel-63	.01	20,000
Niobium-94	.01	300
Phosphorus-32	.5	100
Phosphorus-33	.5	1,000
Polonium-210	.01	10
Potassium-42	.01	9,000
Promethium-145	.01	4,000
Promethium-147	.01	4,000
Radium-226	0.001	100
Ruthenium-106	.01	200
Samarium-151	.01	4,000
Scandium-46	.01	3,000
Selenium-75	.01	10,000
Silver-110m	.01	1,000
Sodium-22	.01	9,000
Sodium-24	.01	10,000
Strontium-89	.01	3,000
Strontium-90	.01	90
Sulfur-35	.5	900
Technitium-99	.01	10,000
Technitium-99m	.01	400,000
Tellurium-127m	.01	5,000
Tellurium-129m	.01	5,000
Terbium-160	.01	4,000
Thulium-170	.01	4,000
Tin-113	.01	10,000
Tin-123	.01	3,000
Tin-126	.01	1,000
Titanium-44	.01	100
Vanadium-48	.01	7,000
Xenon-133	1.0	900,000

Yttrium-91	.01	2,000
Zinc-65	.01	5,000
Zirconium-93	.01	400
Zirconium-95	.01	5,000
Any other beta-gamma emitter	.01	10,000
Mixed fission products	.01	1,000
Mixed corrosion products	.01	10,000
Contaminated equipment beta-gamma	.001	10,000
Irradiated material, any form other than solid noncombustible	.01	1,000
Irradiated material, solid noncombustible	.001	10,000
Mixed radioactive waste, beta-gamma	.01	1,000
Packaged mixed waste, beta-gamma[4]	.001	10,000
Any other alpha emitter	.001	2
Contaminated equipment, alpha	.0001	20
Packaged waste, alpha[4]	.0001	20
Combinations of radioactive materials listed above[1]		

[1] For combinations of radioactive materials, consideration of the need for an emergency plan is required if the sum of the ratios of the quantity of each radioactive material authorized to the quantity listed for that material in Schedule C exceeds one.

[2] Waste packaged in Type B containers does not require an emergency plan.

APPENDIX A

CRITERIA RELATING TO USE OF FINANCIAL TESTS AND PARENT COMPANY GUARANTEES FOR PROVIDING REASONABLE ASSURANCE OF FUNDS FOR DECOMMISSIONING

I. *Introduction*. An applicant or licensee may provide reasonable assurance of the availability of funds for decommissioning based on obtaining a parent company guarantee that funds will be available for decommissioning costs and on a demonstration that the parent company passes a financial test. This appendix established criteria for passing the financial test and for obtaining the parent company guarantee.

II. *Financial Test.* A. To pass the financial test, the parent company must meet the criteria of either paragraph A.1 or A.2 of this section:

1. The parent company must have:

i. Two of the following three ratios: A ratio of total liabilities to net worth less than 2.0; a ratio of the sum of net income plus depreciation, depletion, and amortization to total liabilities greater than 0.1; and a ratio of current assets to current liabilities greater than 1.5; and

ii. Net working capital and tangible net worth each at least six times the current decommissioning cost estimates (or prescribed amount if a certification is used); and

iii. tangible net worth of at least $10 million; and

iv. assets located in the United States amounting to at least 90 percent of total assets or at least six times the current decommissioning cost estimates (or prescribed amount if a certification is used).

2. The parent company must have:

i. A current rating for its most recent bond issuance of AAA, AA, A or BBB as issued by Standard and Poor's or Aaa, Aa, A or Baa as issued by Moody's; and

ii. tangible net worth of at least $10 million; and

iii. tangible net worth at least six times the current decommissioning cost estimate (or prescribed amount if a certification is used); and

iv. assets located in the United States amounting to at least 90 percent of total assets or at least six times the current decommissioning cost estimates (or prescribed amount if a certification is used).

B. The parent company's independent certified public accountant must have compacted the data used by the parent company in the financial test, which is derived from the independently audited, year-end financial statements for the latest fiscal year, with the amounts in such financial statement. In connection with that procedure, the licensee shall inform the Department within 90 days of any matters coming to the auditor's attention which cause the auditor to believe that the data specified in the financial test should be adjusted and that the company no longer passes the test.

C. 1. After the initial financial test, the parent company must repeat the passage of the test within 90 days after the close of each succeeding fiscal year.

2. If the parent company no longer meets the requirements of paragraph A of this section, the license, the licensee must send notice to the Department of intent to establish alternate financial assurance as specified in this Code. The notice must be sent by certified mail within 90 days after the end of the fiscal year for which the year-end financial data show that the parent company no longer meets the financial test requirements. The licensee must provide alternate financial assurance within 120 days after the end of such fiscal year.

III. *Parent Company Guarantee.* The terms of a parent company guarantee which an applicant or licensee obtains must provide that:

A. The parent company guarantee will remain in force unless the guarantor sends notice of cancellation by certified mail to the licensee and the Department. Cancellation may not occur, however, during the 120 days beginning on the date of receipt of the notice of cancellation by both the licensee and the Department, as evidenced by the return receipts.

B. If the licensee fails to provide alternate financial assurance as specified by this Code within 90 days after receipt by the licensee and Department of a notice of cancellation of the parent

company guarantee from the guarantor, the guarantor will provide such alternative financial assurance in the name of the licensee.

C. The parent company guarantee and financial test provisions must remain in effect until the Department has terminated the license.

D. If a trust is established for decommissioning costs, the trustee and trust must be acceptable to the Department. An acceptable trustee includes an appropriate state or federal government agency or an entity which has the authority to act as a trustee and whose trust operations are regulated and examined by a federal or state agency.

APPENDIX B

QUANTITIES OF LICENSED MATERIAL REQUIRING LABELING

Materials	Microcuries
Americium-241	.01
Antimony-122	100
Antimony-124	10
Antimony-125	10
Arsenic-73	100
Arsenic-74	10
Arsenic-76	10
Arsenic-77	100
Barium-131	10
Barium-133	10
Barium-140	10
Bismuth-210	1
Bromine-82	10
Cadmium-109	10
Cadmium-115m	10
Cadmium-115	100
Calcium-45	10
Calcium-47	10
Carbon-14	100
Cerium-141	100
Cerium-143	100
Cerium-144	1

Cesium-131	1,000
Cesium-134m	100
Cesium-134	1
Cesium-135	10
Cesium-136	10
Cesium-137	10
Chlorine-36	10
Chlorine-38	10
Chromium-51	1,000
Cobalt-58m	10
Cobalt-58	10
Cobalt-60	1
Copper-64	100
Dysprosium-165	10
Dysprosium-166	100
Erbium-169	100
Erbium-171	100
Europium-152 9.2h	100
Europium-152 13 yr	1
Europium-154	1
Europium-155	10
Fluorine-18	1,000
Gadolinium-153	10
Gadolinium-159	100
Gallium-72	10
Germanium-71	100
Gold-198	100
Gold-199	100
Hafnium-181	10
Holmium-166	100
Hydrogen-3	1,000
Indium-113m	100

Indium-114m	10
Indium-115m	100
Indium-115	10
Iodine-125	1
Iodine-126	1
Iodine-129	0.1
Iodine-131	1
Iodine-132	10
Iodine-133	1
Iodine-134	10
Iodine-135	10
Iridium-192	10
Iridium-194	100
Iron-55	100
Iron-59	10
Krypton-85	100
Krpton-87	10
Lanthanum-140	10
Lutetium-177	100
Manganese-52	10
Manganese-54	10
Manganese-56	10
Mercury-197m	100
Mercury-197	100
Mercury-203	10
Molbdenum-99	100
Neodymium-147	100
Neodymium-149	100
Nickel-59	100
Nickel-63	10
Nickel-65	100
Niobium-93m	10

Niobium-95	10
Niobium-97	10
Osmium-185	10
Osmium-191m	100
Osmium-191	100
Osmium-193	100
Palladium-103	100
Palladium-109	100
Phosphorus-32	10
Platinum-191	100
Platinum-193m	100
Platinum-193	100
Platinum-197m	100
Platinum-197	100
Plutonium-239	.01
Polonium-210	0.1
Potassium-42	10
Praseodymium-142	100
Praseodymium-143	100
Promethium-147	10
Promethium-149	10
Radium-226	.01
Rhenium-186	100
Rhenium-188	100
Rhodium-103m	100
Rhodium-105	100
Rubidium-86	10
Rubidium-87	10
Ruthenium-97	100
Ruthenium-103	10
Ruthenium-105	10
Ruthenium-106	1

Samarium-151	10
Samarium-153	100
Scandium-46	10
Scandium-47	100
Scandium-48	10
Seleium-75	10
Silicon-31	100
Silver-105	10
Silver-110m	1
Silver-111	100
Sodium-24	10
Strontium-85	10
Strontium-89	1
Strontium-90	0.10
Strontium-91	10
Strontium-92	10
Sulphur-35	100
Tantalum-182	10
Technetium-96	10
Technetium-97m	100
Technetium-97	100
Technetium-99m	100
Technetium-99	10
Tellurium-125m	10
Tellurium127m	10
Tellurium-127	100
Tellurium129m	10
Tellurium-129	100
Tellurium-131m	10
Tellurium-132	10
Terbium-160	10
Thallium-200	100

Thallium-201	100
Thallium-202	100
Thallium-204	10
Thorium (natural)[1]	100
Thulium-170	10
Thulium-171	10
Tin-113	10
Tin-125	10
Tungsten-181	10
Tungsten-185	10
Tungsten-187	100
Uranium (natural)[2]	100
Uranium-233	.01
Uranium-234--Uranium-235	.01
Vandium-48	10
Xenon-131m	1,000
Xenon-133	100
Xenon-135	100
Ytterbium-175	100
Yttrium-90	10
Yttrium-91	10
Yttrium-92	100
Yttrium-93	100
Zinc-65	10
Zinc-69m	100
Zinc-69	1,000
Zirconium-93	10
Zirconium-95	10
Zirconium-97	10
Any alpha emitting radionuclide not listed above or mixtures of alpha emitters of unknown composition	.01
Any radionuclide other than alpha emitting radio-nuclides, not listed above or mixtures of beta emitters of unknown composition	.1

[1]Based on alpha disintegration rate of Th-232, Th-230 and their daughter products.

[2]Based on alpha disintegration rate of U-238, U-234, and U-235.

Source: 10 CFR Appendix B to Part 30—Quantities of Licensed Material Requiring Labeling

APPENDIX C

CRITERIA RELATING TO USE OF FINANCIAL TESTS AND SELF GUARANTEES FOR PROVIDING REASONABLE ASSURANCE OF FUNDS FOR DECOMMISSIONING

I. *Introduction*

An applicant or licensee may provide reasonable assurance of the availability of funds for decommissioning based on furnishing its own guarantee that funds will be available for decommissioning costs and on a demonstration that the company passes the financial test of Section II of this appendix. The terms of the self-guarantee are in Section III of this appendix. This appendix establishes criteria for passing the financial test for the self guarantee and establishes the terms for a self-guarantee.

II. *Financial Test*

A. To pass the financial test a company must meet all of the criteria set forth in this section. For purposes of applying the Appendix C criteria, tangible net worth must be calculated to exclude all intangible assets and the net book value of the nuclear facility and site, and total net worth, which may include intangible assets, must be calculated to exclude the net book value and goodwill of the nuclear facility and site. These criteria include:

(1) Tangible net worth of at least $21 million, and total net worth at least 10 times the amount of decommissioning funds being assured by a self-guarantee for all decommissioning activities for which the company is responsible as self-guaranteeing licensee and as parent-guarantor for the total of all nuclear facilities or parts thereof (or the current amount required if certification is used).

(2) Assets located in the United States amounting to at least 90 percent of total assets or at least 10 times the amount of decommissioning funds being assured by a self-guarantee, for all decommissioning activities for which the company is responsible as self-guaranteeing licensee and as parent-guarantor for the total of all nuclear facilities or parts thereof (or the current amount required if certification is used).

(3) A current rating for its most recent uninsured, uncollateralized, and unencumbered bond issuance of AAA, AA, or A (including adjustments of + and –) as issued by Standard and Poor's, or Aaa, Aa, or A (including adjustments of 1, 2, or 3) as issued by Moody's.

B. To pass the financial test, a company must meet all of the following additional requirements:

(1) The company must have at least one class of equity securities registered under the Securities Exchange Act of 1934.

(2) The company's independent certified public accountant must compare the data used by the company in the financial test, which is derived from the independently audited, year-end financial statements for the latest fiscal year, with the amounts in such financial statement. The accountant must evaluate the company's off-balance sheet transactions and provide an opinion on whether those transactions could materially adversely affect the company's ability to pay for decommissioning costs. The accountant must verify that a bond rating, if used to demonstrate passage of the financial test, meets the requirements of Section II, paragraph A of this appendix. In connection with the auditing procedure, the licensee must inform the NRC within 90 days of any matters coming to the auditor's attention which cause the auditor to believe that the data specified in the financial test should be adjusted and that the company no longer passes the test.

(3) After the initial financial test, the company must annually pass the test and provide documentation of its continued eligibility to use the self-guarantee to the Department within 90 days after the close of each succeeding fiscal year.

C. If the licensee no longer meets the requirements of Section II.A. of this appendix, the licensee must send immediate notice to the Department of its intent to establish alternate financial assurance as specified in the Department's regulations within 120 days of such notice.

III. *Company Self-Guarantee*

The terms of a self-guarantee which an applicant or licensee furnishes must provide that:

A. The guarantee will remain in force unless the licensee sends notice of cancellation by certified mail to the Department. Cancellation may not occur, however, during the 120 days beginning on the date of receipt of the notice of cancellation by the Department, as evidenced by the return receipt.

B. The licensee shall provide alternative financial assurance as specified in the Department's regulations within 90 days following receipt by the Department of a notice of cancellation of the guarantee.

C. The guarantee and financial test provisions must remain in effect until the Department has terminated the license or until another financial assurance method acceptable to the Department has been put in effect by the licensee.

D. The licensee will promptly forward to the Department and the licensee's independent auditor all reports covering the latest fiscal year filed by the licensee with the Securities and Exchange Commission pursuant to the requirements of section 13 of the Securities and Exchange Act of 1934.

E. (1) If, at any time, the licensee's most recent bond issuance ceases to be rated in any category of "A–" and above by Standard and Poor's or in any category of "A3" and above by Moody's, the licensee will notify the Department in writing within 20 days after publication of the change by the rating service.

(2) If the licensee's most recent bond issuance ceases to be rated in any category of A or above by both Standard and Poo's and Moody's, the licensee no longer meets the requirements of Section II.A. of this appendix.

F. The applicant or licensee must provide to the Department a written guarantee (a written commitment by a corporate officer) which states that the licensee will fund and carry out the required decommissioning activities or, upon issuance of an order by the Department, the licensee will fund the standby trust in the amount guaranteed by the self-guarantee agreement.

G. (1) A standby trust to protect public health and safety and the environment must be established for decommissioning costs before the self-guarantee agreement is submitted.

(2) The trustee and trust must be acceptable to the Department. An acceptable trustee includes an appropriate State or Federal Government agency or an entity which has the authority to act as a trustee and whose trust operations are regulated and examined by a Federal or State agency. The Commission has the right to change the trustee. An acceptable trust will meet the regulatory criteria established in these regulations that govern the issuance of the license for which the guarantor has accepted the obligation to pay for decommissioning costs.

H. The guarantor must agree that if the guarantor admits in writing its inability to pay its debts generally, or makes a general assignment for the benefit of creditors, or any proceeding is instituted by or against the guarantor seeking to adjudicate it as bankrupt or insolvent, or seeking dissolution, liquidation, winding-up, reorganization, arrangement, adjustment, protection, relief or composition of it or its debts under any law relating to bankruptcy, insolvency, or reorganization or relief of debtors, or seeking the entry of an order for relief or the appointment of a receiver, trustee, custodian, or other similar official for the guarantor or for any substantial part of its property, or the guarantor takes any action to authorize or effect any of the actions stated in this paragraph, then the Department may:

(1) Declare that the financial assurance guaranteed by the self-guarantee agreement is immediately due and payable to the standby trust set up to protect the public health and safety and the environment, without diligence, presentment, demand, protest or any other notice of any kind, all of which are expressly waived by guarantor; and

(2) Exercise any and all of its other rights under applicable law.

I. The guarantor must notify the Department, in writing, immediately following the occurrence of any event listed in paragraph H of this appendix, and must include a description of the event, including major creditors, the amounts involved, and the actions taken to assure that the amount of funds guaranteed by the self-guarantee agreement for decommissioning will be transferred to the standby trust as soon as possible.

§175.102 Requirements for specific types of radioactive materials licenses.

(a) *Types of license.* (1) For the purposes of §5.07(a) and §175.05 of this Code, the following special designations of radioactive materials licenses shall apply:

(i) A specific license of limited scope for teletherapy means a license that authorizes receipt, acquisition, ownership, possession, use and transfer of specified quantities and types of radioactive material for use in teletherapy programs.

(ii) A specific license of limited scope for medical use means a license that authorizes receipt, acquisition, ownership, possession, use and transfer of specified quantities and types of radioactive material for use in or on humans in a medical program, but does not include teletherapy.

(iii) A specific license of limited scope for other use means a license that authorizes receipt, production, acquisition, ownership, possession, use and transfer of specified quantities and types of radioactive material for uses other than in or on humans.

(iv) A specific license of broad scope for medical use means a license that authorizes receipt, acquisition, ownership, possession, use and transfer of any chemical or physical form of the radioactive materials specified in the license, for use in or on humans in a medical program, but does not include teletherapy.

(v) A specific license of broad scope for research and development means a license that authorizes receipt, acquisition, ownership, possession, use and transfer of any chemical or physical form of radioactive materials specified in the license, in quantities not exceeding those specified in the license, for uses other than in or on humans.

(b) The requirements specified in this section are in addition to, and not in substitution for, others in this Code. In particular, the provisions of §175.101 apply to all license applications and all specific radioactive materials licenses.

(c) *Specific licenses for human use of radioactive materials in institutions.* (1) An application by an institution for a specific license for medical use of radioactive material will be approved if:

(i) the applicant satisfies the requirements specified in §175.101 and §175.103 of this Code; and

(ii) the applicant possesses adequate facilities for the clinical care of patients; and

(iii) the physician(s) designated on the application as the individual authorized user(s) has training and experience as specified in §175.103(j) in the proposed use, the handling and administration of radionuclides and the clinical management of radioactive patients. The physician shall furnish evidence of such experience with his/her application. A statement from his/her preceptor at the institution where he/she acquired such training and experience, indicating their amount and nature, may be submitted as evidence of such experience.

(iv) If the application is for a license to use unspecified quantities or multiple types of radioactive materials with atomic numbers 3 through 83 the applicant shall have had previous experience operating under a specific institutional license and have been engaged in the use of radioisotopes in medical research, as well as routine diagnosis and therapy.

(v) The license application is signed by the chairman of the radiation safety committee and an authorized representative of the institution.

(d) *Specific licenses to individual physicians for human use of radioactive materials.* (1) An application by an individual physician for a specific license for human use of radioactive material will be approved if:

(i) the applicant satisfies the requirements specified in §175.101 and §175.103 of this Code; and

(ii) the applicant has training and experience as specified in §175.103(j) in the proposed use, the handling and administration of radionuclides, and the clinical management of radioactive patients. The physician shall furnish evidence of such training and experience with his/her application. A statement from his/her preceptor at the institution where he/she acquired such training and experience, indicating their amount and nature, may be submitted as evidence of such experience.

(e) *Specific licenses of broad scope.* (1) A specific license of broad scope shall be issued only to medical institutions or institutions of higher education; such licenses shall not be issued to individuals.

(2) An application for a specific license of broad scope will be approved if:

(i) the applicant satisfies the general requirements specified in §175.101(e) of this Code; and

(ii) the applicant has engaged in a reasonable number of activities involving the use of radioactive material; and

(iii) the applicant has established administrative controls and provisions relating to organization and management, procedures, recordkeeping, material control, and accounting and management review that are necessary to assure safe operations, including:

(A) the establishment of a radiation safety committee pursuant to §175.03 of this Code; and

(B) the appointment of a full-time radiation safety officer pursuant to §175.03 of this Code; and

(C) the establishment of appropriate administrative procedures to assure:

(a) control of procurement and use of radioactive material; and

(b) completion of safety evaluations of proposed uses of radioactive material which take into consideration such matters as the adequacy of facilities and equipment, training and experience of the user, and the operating or handling procedures; and

(c) review, approval, and recording by the radiation safety committee of safety evaluations of proposed uses prepared in accordance with §175.102(e)(2)(iii)(C)(*b*) prior to the use of radioactive materials.

(3) The following are conditions of all specific licenses of broad scope:

(i) Unless specifically authorized pursuant to other provisions of this Code, broad scope licensees shall not:

(A) conduct tracer studies in the environment involving direct release of radioactive material;

(B) receive, acquire, own, possess, use, transfer, or import devices containing 3.7 E6 GBq (100,000 Ci) or more of radioactive material in sealed sources used for irradiation of materials;

(C) add, or cause the addition of, radioactive material to any food, beverage, cosmetic, drug or other product designed for ingestion by, or application to, a human being except as authorized in the license.

(f) *Specific licenses for non-human use.* (1) An application for a specific license authorizing non-human use of radioactive materials will be approved if:

(i) the applicant satisfies the general requirements specified in §175.101(e) of this Code; and

(ii) the applicant, or the applicant's personnel, has training and experience commensurate with the proposed amounts, types and uses of radioactive materials which shall include at a minimum:

(A) a college degree at the bachelor level in a physical, biological, environmental or engineering science; and

(B) at least forty (40) hours of training and experience in the safe handling of radioactive materials appropriate to the type and forms of such materials to be used, which shall include:

(a) characteristics of ionizing radiation;

(b) units of radiation dose and quantities;

(c) radiation detection instrumentation; and

(d) biological hazards of exposure to radiation.

(g) *General licenses.* (1) A general license is hereby issued to own radioactive material without regard to quantity. Notwithstanding any other provisions of this Code, this general license does not authorize the manufacture, production, transfer, receipt, possession or use of radioactive material.

(2) *Source material.* (i) A general license is hereby issued authorizing use and transfer of not more than 6.8 kilograms (15 pounds) of source material at any one time by persons in the following categories:

(A) pharmacists using the source material solely for the compounding of medicinals; (B) physicians using the source material for medicinal purposes;

(C) persons receiving possession of source material from pharmacists and physicians in the form of medicinals or drugs;

(D) commercial and industrial firms, and research, educational, and medical institutions for research, development, educational or commercial purposes;

and provided, that no such person shall, pursuant to this general license, receive more than 68 kilograms (150 pounds) of source material in any one (1) calendar year.

(ii) Persons who transfer, receive, possess or use source material pursuant to the general license issued in §175.102(g)(2)(i) are exempt from the provisions of §175.03, §175.04, §175.06, §175.104 and §175.105 of this Code to the extent that such transfer, receipt, possession or use is within the terms of such general license, provided however, that this exemption shall not be deemed to apply to any such person who is also in possession of source material under a specific license issued pursuant to this Code.

(iii) A general license is hereby issued authorizing the receipt of title to source material without regard to quantity. This general license does not authorize any person to transfer, receive, possess or use source material.

(3) *Certain devices and equipment.* (i) A general license is hereby issued to transfer, receive, possess or use radioactive material incorporated in the following devices or equipment which have been manufactured, tested and labeled in accordance with a specific license issued by the Department, the U.S. Nuclear Regulatory Commission or an agreement state, authorizing distribution under this general license or its equivalent.

(A) Static elimination devices. Devices designed for use as static eliminators which contain, as a sealed source or sources, radioactive material consisting of a total of not more than 18.5 MBq (500 mCi) of polonium-210 per device.

(B) Ion generating tubes. Devices designed for ionization of air which contain, as a sealed source or sources, radioactive material consisting of a total of not more than 18.5 MBq (500 mCI) of polonium-210 per device or a total of not more than 1.85 GBq (50 mCi) per device.

(4) *Certain detecting, measuring, gauging, or controlling devices and certain devices for producing light or an ionized atmosphere.*

(i) A general license is hereby issued to commercial and industrial firms and research, educational and medical institutions, individuals in the conduct of their business, and federal, state or local government agencies to acquire, receive, possess, use or transfer, in accordance with

the provisions of subparagraphs (ii), (iii) and (iv) of this paragraph, byproduct material contained in devices designed and manufactured for the purpose of detecting, measuring, gauging or controlling thickness, density, level, interface location, radiation, leakage, or qualitative or quantitative chemical composition, or for producing light or an ionized atmosphere.

(ii)(A) The general license in subparagraph (i) of this paragraph applies only to byproduct material contained in devices which have been manufactured or initially transferred and labeled in accordance with the specifications contained in:

(a) A specific license issued under 10 CFR §32.51;

(b) An equivalent specific license issued by an agreement state; or

(c) An equivalent specific license issued by a state with provisions comparable to 10 CFR §32.51.

(B) The devices must have been received from one of the specific licensees described in clause (ii)(A) of this section or through a transfer made under clause (iii)(I) of this paragraph.

(iii) Any person who acquires, receives, possesses, uses or transfers byproduct material in a device pursuant to the general license in subparagraph (i) of this section:

(A) Shall assure that all labels affixed to the device at the time of receipt remain affixed, and bearing a statement that removal of the label is prohibited, and must comply with all instructions and precautions provided by such labels;

(B) Shall assure that the device is tested for leakage of radioactive material and proper operation of the on-off mechanism and indicator, if any, at no longer than six month intervals or as frequently as is specified in the label; however:

(a) Devices containing only krypton need not be tested for leakage of radioactive material, and

(b) Devices containing only tritium or not more than 100 microcuries of other beta and/or gamma emitting material or 10 microcuries of alpha emitting material, and devices held in storage in the original shipping container prior to initial installation need not be tested for any purpose;

(C) Shall assure that the tests required by clause (iii)(B) of this paragraph and other testing, installation, servicing, and removal from installation involving the radioactive materials, its shielding or containment, are performed:

(a) In accordance with the instructions provided by the labels; or

(b) By a person holding a specific license pursuant to Parts 30 and 32 of 10 CFR or from an agreement state to perform such activities;

(D) Shall maintain records showing compliance with the requirements of clauses (iii)(B) and (iii)(C) of this paragraph. The records must show the results of tests. The records also must show the dates of performance of, and the names of persons performing, testing, installing, servicing, and removing from the installation radioactive material and its shielding or containment. The licensee shall retain these records as follows:

(a) Each record of a test for leakage or radioactive material required by clause (iii)(B) of this paragraph must be retained for three years after the next required leak test is performed or until the sealed source is transferred or disposed of.

(b) Each record of a test of the on-off mechanism and indicator required by clause (iii)(B) of this paragraph must be retained for three years after the next required test of the on-off mechanism and indicator is performed or until the sealed source is transferred or disposed of.

(c) Each record that is required by clause (iii)(C) of this paragraph must be retained for three years from the date of the recorded event or until the device is transferred or disposed of.

(E) Shall immediately suspend operation of the device if there is a failure of, or damage to, or any indication of a possible failure of or damage to, the shielding of the radioactive material or

the on-off mechanism or indicator, or upon the detection of 185 bequerel (0.005 microcurie) or more removable radioactive material. The device may not be operated until it has been repaired by the manufacturer or other person holding a specific license to repair such devices that was issued under parts 30 and 32 or by an agreement state. The device and any radioactive material from the device may only be disposed of by transfer to a person authorized by a specific license to receive the byproduct material in the device or as otherwise approved by the U.S. Nuclear Regulatory Commission. A report containing a brief description of the event and the remedial action taken; and, in the case of detection of 0.005 microcurie or more removable radioactive material, or failure of or damage to a source likely to result in contamination of the premises or the environs, a plan for ensuring that the premises and environs are acceptable for unrestricted use, must be furnished to the Department by the licensee within 5 days as required by §175.03(l)(7). Upon such a failure, damage, or possible indication of failure or damage, the Department may determine to apply the criteria set out in 10 CFR §20.1402;

(F) Shall not abandon the device containing byproduct material;

(G) Shall not export the device containing byproduct material except in accordance with 10 CFR Part 110:

(H)*(a)* Except as provided in item (iii)(H)(*c*) of this paragraph, shall transfer or dispose of the device containing byproduct material only by: export as provided by clause (iii)(G) of this paragraph; transfer to another general licensee as authorized in clause (iii)(I) of this paragraph; transfer to a person authorized to receive the device by a specific license issued under Parts 30 and 32 of 10 CFR; transfer to a person authorized to collect waste under Part 30 of 10 CFR or the equivalent regulation of an agreement state; or transfer as otherwise approved under item (iii)(H)(*c)* of this paragraph.

(b) Shall, within 30 days after the transfer of a device to a specific licensee or export, furnish a report to the Department. The report must contain: (I) The identification of the device by the manufacturer's (or initial transferor's) name, model number, and serial number;

(II) The name, address, and license number of the person receiving the device (license number not applicable if exported); and

(III) The date of the transfer.

(c) Shall obtain written Department approval before transferring the device to any licensee not specifically identified in item (iii)(H)(*a*) of this paragraph; however, a holder of a specific license may transfer a device for possession and use under its own specific license without prior approval, if, the holder:

(I) Verifies that the specific license authorizes the possession and use, or applies for and obtains an amendment to the license authorizing the possession and use;

(II) Removes, alters, covers, or clearly and unambiguously augments the existing label (otherwise required by clause (iii)(A) of this paragraph) so that the device is labeled in compliance with 10 CFR § 20.1904; however the manufacturer, model number, and serial number must be retained;

(III) Obtains the manufacturer's or initial transferor's information concerning maintenance that would be applicable under the specific license (such as leak testing procedures); and

(IV) Reports the transfer under item (iii)(H)(b) of this paragraph.

(I) Shall transfer the device to another general licensee only if:

(a) The device remains in use at a particular location. In this case, the transferor must give the transferee a copy of this section, copies of 19 CFR §§ 20.2201, 20.2202, 30.51, and 31.2, and any safety documents identified in the label of the device. Within 30 days of such a transfer, the

transferor shall report to the Department:

(I) The manufacturer's (or initial transferor's) name;

(II) The model number and the serial number of the device transferred;

(III) The transferee's name and mailing address for the location of use; and

(IV) The name, title, and phone number of the responsible individual identified by the transferee in accordance with clause (iii)(L) of this paragraph to have knowledge of and authority to take actions to ensure compliance with the appropriate regulations and requirements; or

(*b*) The device is held in storage in the original shipping container by an intermediate person at its intended location of use prior to initial use by a general licensee.

(J) Shall comply with the provisions of 10 CFR §§ 20.2201 and 20.2202 for reporting radiation incidents, theft or loss of licensed material, but pursuant to title 10 of the code of federal regulations, is exempt from the other requirements of 10 CFR Parts 19, 20, and 21.

(K) Shall respond to written requests from the Department or U.S. Nuclear Regulatory Commission to provide information relating to the general license within 30 calendar days of the date of the request, or other time specified in the request. If the general licensee cannot provide the requested information within the allotted time, it must, within that same time period, request more time to supply the information by providing a written justification for the request to the Department.

(L) Shall appoint an individual responsible for having knowledge of the appropriate regulations and requirements and the authority for taking required actions to comply with appropriate regulations and requirements. The general licensee, through this individual, must ensure the day-to-day compliance with appropriate regulations and requirements. This appointment does not relieve the general licensee of any of its responsibility in this regard.

(M)*(a)* Except as provided in item (iii)(M)(*d*) of this paragraph, shall register, in accordance with items (iii)(M)(*b*) and (*c*) of this paragraph, devices containing at least 370 megabecquerels (10 millicuries) of cesium-137, 3.7 megabecquerels (0.1 millicurie) of strontium-90, 37 megabecquerels (1 millicurie) of cobalt-60, 3.7 megabecquerels (0.1 millicurie) of radium-226, or 37 megabecquerels (1 millicurie) of americium-241 or any other transuranic (i.e., element with atomic number greater than uranium (92)), based on the activity indicated on the label. Each address for a location of use, as described under subitems (iii)(M)(*c*)(IV) of this paragraph, represents a separate general licensee and requires a separate registration and fee as specified in this Code.

(b) If in possession of a device meeting the criteria of item (iii)(M)(*a*) of this paragraph, must register these devices annually with the Department and must pay the fee required by §5.07 of this Code. Registration must be done by verifying, correcting, and/or adding to the information provided in a request for registration received from the Department. The registration information must be submitted to the Department within 30 days of the date of the request for registration or as otherwise indicated in the request. In addition, a general licensee holding devices meeting the criteria of item (iii)(M)(*a*) of this paragraph is subject to the bankruptcy notification requirement in 10 CFR § 30.34(h) and §175.101(k)(1)(vi).

(c) In registering any device meeting the criteria listed in item (iii)(M)(*a*) of this paragraph, the general licensee must furnish the following information and any other information specifically requested by the Department:

(I) Name and mailing address of the general licensee.

(II) Information about each device: the manufacturer (or initial transferor), model number, serial number, the radioisotope and activity (as indicated on the label).

(III) Name, title, and telephone number of the responsible person designated as a representative of the general licensee under clause (i)(L) of this paragraph.

(IV) Address or location at which each device is used or stored. For portable devices, the address of the primary place of storage.

(V) Certification by the responsible representative of the general licensee that the information concerning each device has been verified through a physical inventory and checking of label information.

(VI) Certification by the responsible representative of the general licensee that they are aware of the requirements of the general license.

(d) A person generally licensed by an agreement state with respect to any device meeting the criteria in item (iii)(M)(*a*) of this paragraph are not subject to the registration requirements of this clause if the device is used in an area subject to NRC jurisdiction for less than 180 days in any calendar year. The Department will not request registration information from such a licensee.

(N) Shall report any change to the mailing address for the location of use (including change in name of general licensee) to the Department within 30 days of the effective date of the change. For a portable device, a report of address change is only required for a change in the device's primary place of storage.

(O) May not hold any device that is not in use for longer than 2 years. When any device with shutters is not being used, the shutter must be locked in the closed position. The testing required by clause (iii)(B) of this paragraph need not be performed during a period of storage only. However, when a device is put back into service or transferred to another person, and has not been tested within the required test interval, it must be tested for leakage before use or transfer, and the shutter tested before use. Any devices kept in standby for future use is excluded from the two-year time limit in this clause if the general licensee performs quarterly physical inventories of any such device while it is in standby.

(iv) The general license in subparagraph (i) of this paragraph does not authorize the manufacture or import of devices containing byproduct material.

(5) *Labeling of devices*

(i) (A) Each person licensed under 10 CFR § 32.57 shall affix to each source, or storage container for the source, a label which contains sufficient information relative to safe use and storage of the source and includes the following statement, or a substantially similar statement which contains the information called for in the following statement:

(B) "The receipt, possession, use, and transfer of this source, Model _____, Serial No., are subject to a general license and the regulations of the United States Nuclear Regulatory Commission or of a State with which the Commission has entered into an agreement for the exercise of regulatory authority. Do not remove this label.

CAUTION - RADIOACTIVE MATERIAL – THIS SOURCE CONTAINS AMERICIUM-241 (or RADIUM-226). DO NOT TOUCH RADIOACTIVE PORTION OF THIS SOURCE.

_____

(*Name of manufacturer or initial transferor*)"

(C) such devices are installed on the premises of the general licensee by a person authorized to install such devices under a specific license issued to the installer by the Department, the U.S. Nuclear Regulatory Commission or an agreement state, if a label affixed to the device at the time of receipt states that installation by a specific licensee is required. This requirement does not

apply while devices are held in storage in the original shipping container pending installation by a specific licensee.

(ii) Persons who receive, possess or use a device pursuant to the general license issued under this subdivision:

(A) shall, within ten (10) days after the receipt of the device, notify the Department of the type of device and the name and address of the supplier;

(B) shall not transfer, abandon, or dispose of the device except by transfer to a person duly authorized to receive such device by a specific license issued by the Department, the U.S. Nuclear Regulatory Commission or an agreement state, and shall furnish to the Department, within thirty (30) days after any such transfer, a report containing the name of the manufacturer of the device, the type of device, the manufacturer's serial number of the device, and the name and address of the person receiving the device;

(C) shall assure that all labels affixed to the device at the time of receipt and bearing the statement, "Removal of this label is prohibited" are maintained thereon and shall comply with all instructions contained in such labels;

(D) shall have the device tested for leakage of radioactive material and proper operation of the on-off mechanism and indicator, if any, at the time of installation of the device or replacement of the radioactive material on the premises of the general licensee and thereafter at no longer than six (6) month intervals or at such longer intervals not to exceed three (3) years as are specified in the label required by §175.102(g)(5)(i)(A), provided, that devices containing only krypton-85 need not be tested for leakage, and devices containing only hydrogen-3 need not be tested for any purpose;

(E) shall have all the tests required by §175.102(g) and all other services involving the radioactive material, its shielding and containment, performed by the supplier or other person duly authorized by a specific license issued by the Department, the U.S. Nuclear Regulatory Commission or an agreement state, to manufacture, install or service such devices;

(F) shall, within thirty (30) days after the occurrence of a failure or of damage to the shielding of the radioactive material or the on-off mechanism or indicator or upon the detection of 0.185 kBq (0.005 mCi) or more of removable radioactive material, furnish to the Department a report containing the name of the manufacturer of the device and a brief description of the event and the remedial action taken; and shall maintain records of all tests performed on the devices as required herein, including the dates and results of the tests and the names of the persons conducting the tests;

(G) shall, upon the occurrence of a failure of or damage to, or any indication of a possible failure of or damage to, the shielding or containment of the radioactive material or the on-off mechanism or indicator, immediately suspend operation of the device until it has been repaired by a person holding a specific license issued by the Department, the U.S. Nuclear Regulatory Commission or an agreement state, to manufacture, install or service such devices, or disposed of by transfer to a person holding a specific license issued by the Department, the U.S. Nuclear Regulatory Commission or an agreement state to receive the radioactive material contained in the device;

(H) shall be exempt from the provisions of §175.03, §175.04, §175.06, §175.104 and §175.105 of this Code, except that such persons shall comply with the provisions of §175.03(l)(1).

(iii) Any holder of a license issued by the Department, the U.S. Nuclear Regulatory Commission or an agreement state which authorizes the holder to manufacture, install or service a device subject to the general license in §175.102(g)(3)(i), and which is not limited as to specific

installation or installations, may install or service such devices without obtaining a license from the Department provided that:

(A) such person shall file a report with the Department within thirty (30) days after the end of each calendar quarter in which any device is transferred to or installed within the Department's jurisdiction. Each such report shall identify the name and address of each person receiving a device, the type of device transferred, and the quantity and type of radioactive material contained in the device;

(B) the device is manufactured, labeled, installed and serviced in accordance with terms and conditions of the license issued to such person;

(C) such person shall assure that any labels required to be affixed to the device bear a statement that "Removal of this label is prohibited"; and

(D) the person to whom such device is transferred, or on whose premises such device is installed or serviced, has a copy of the general license requirements or equivalent requirements specified in §175.102(g)(3)(ii).

(iv) The Department may withdraw, limit or qualify its acceptance of any specific license issued by another agency, or any product distributed pursuant to such licensing document, upon determining that such action is necessary to prevent undue hazard to public health and safety or property.

(6) *Luminous safety devices for aircraft.* (i) A general license is hereby issued to receive, possess or use hydrogen-3 or promethium-147 contained in luminous safety devices for use in aircraft, provided:

(A) each device contains not more than 370 GBq (10 Ci) of hydrogen-3 or 11.1 GBq (300 mCi) of promethium-147; and

(B) each device has been manufactured, assembled or imported in accordance with a specific license issued by the U.S. Nuclear Regulatory Commission, or each device has been manufactured, assembled or imported in accordance with the specifications contained in a specific license issued by the Department or an agreement state pursuant to licensing requirements equivalent to those in §32.53 of 10 CFR Part 32.

(ii) Persons who receive, possess or use luminous safety devices pursuant to the general license in §175.102(g)(4)(i) are exempt from the provisions of §175.03, §175.04, §175.06, §175.104 and §175.105 of this Code, except that such persons shall comply with the provisions of §175.03(l)(1).

(iii) This general license does not authorize the manufacture, assembly or repair of luminous safety devices containing hydrogen-3 or promethium-147.

(iv) This general license does not authorize the receipt, possession or use of promethium-147 contained in instrument dials.

(7) *Calibration and reference sources.* (i) A general license is hereby issued to those persons listed below to transfer, receive, possess or use, in accordance with the provisions of §175.102(g)(5)(iii) and (iv), americium-241 in the form of calibration or reference sources:

(A) any person who holds a specific license issued by the Department, the New York State Department of Health or the New York State Department of Labor which authorizes the transfer, receipt, possession or use of radioactive material; and

(B) any person who holds a specific license issued by the U.S. Nuclear Regulatory Commission which authorizes the transfer, receipt, possession or use of special nuclear material.

(ii) A general license is hereby issued to transfer, receive, possess or use plutonium in the form of calibration or reference sources in accordance with the provisions of §175.102(g)(5)(iv) and (v)

to any person who holds a specific license issued by the Department, the New York State Department of Health or the New York State Department of Labor which authorizes the transfer, receipt, possession or use of radioactive material.

(iii) The general licenses in §175.102(g)(5)(i) and (ii) apply only to calibration or reference sources which have been manufactured in accordance with the specifications contained in a specific license issued to the manufacturer or importer of the sources by the U.S. Nuclear Regulatory Commission pursuant to §32.57 of 10 CFR Part 32 or §70.39 of 10 CFR Part 70 or which have been manufactured or imported in accordance with the specifications contained in a specific license issued by the Department or an agreement state pursuant to licensing requirements equivalent to those contained in §32.57 of 10 CFR Part 32 or §70.39 of 10 CFR Part 70.

(iv) Persons who transfer, receive, possess or use one or more calibration or reference sources pursuant to these general licenses:

(A) shall not possess at any one time, at any one location of storage or use, more than 185 kBq (5 mCi) of americium-241 and 185 kBq (5 mCi) of plutonium in such sources;

(B) shall not transfer, receive, possess or use such source unless the source, or the storage container, bears a label which includes the following statement or a substantially similar statement which contains the information called for in the following statement:

The transfer, receipt, possession or use of this device, Model_____ , Serial number _____ , are subject to a general license and the regulations of the U.S. Nuclear Regulatory Commission or of a State with which the Nuclear Regulatory Commission has entered into an agreement for the exercise of regulatory authority. Do not remove this label. CAUTION—RADIOACTIVE MATERIAL—THIS SOURCE CONTAINS (AMERICIUM-241) (PLUTONIUM)[3]*. DO NOT TOUCH RADIOACTIVE PORTION OF THIS SOURCE.*

_____

(Name of manufacturer or importer);

(C) shall not transfer, abandon or dispose of such source except by transfer to a person authorized by a license from the Department, the U.S. Nuclear Regulatory Commission or an agreement state to receive the source;

(D) shall store such source, except when the source is being used, in a closed container adequately designed and constructed to contain americium-241 or plutonium which might otherwise escape during storage; and

(E) shall not use such source for any purpose other than the calibration of radiation detectors or the standardization of other sources.

(v) These general licenses do not authorize the manufacture of calibration or reference sources containing americium-241 or plutonium.

(vi) A general license is hereby issued to transfer, receive, possess or use sealed radioactive materials sources in individual quantities each of which does not exceed the applicable quantity set forth in Appendix B of §175.101 of this Code, to any person who holds a specific license issued by the Department.

(vii) Persons who transfer, receive, possess or use sources pursuant to the general license in §175.102(g)(5)(vi):

(A) shall not transfer, abandon or dispose of such sources except by transfer to a person duly authorized to receive such sources by the Department, the U.S. Nuclear Regulatory Commission or an agreement state; and

(B) shall store such sources, except when being used, in a secure location.

(8) *Ice detection devices.* (i) A general license is hereby issued to transfer, receive, possess or use strontium-90 contained in ice detection devices, provided each device contains not more than 1.85 MBq (50 mCi) of strontium-90 and each device has been manufactured or imported in accordance with a specific license issued by the U.S. Nuclear Regulatory Commission pursuant to §32.61 of 10 CFR Part 32 or by the Department or an agreement state pursuant to licensing requirements equivalent to those contained in §32.61 of 10 CFR Part 32.

(ii) Persons who transfer, receive, possess or use strontium-90 contained in ice detection devices pursuant to this general license:

(A) shall, upon occurrence of visually observable damage, such as a bend or crack or discoloration from overheating, to the device, discontinue use of the device until it has been inspected, tested for leakage and repaired by a person holding a specific license from the U.S. Nuclear Regulatory Commission or an agreement state to manufacture or service such devices; or shall dispose of the device pursuant to §175.104 of this Code;

(B) shall assure that all labels affixed to the device at the time of receipt, and which bear a statement which prohibits removal of the labels, are maintained thereon; and

(C) are exempt from the provisions of §175.03, §175.04, §175.06 and §175.105 of this Code, except that such persons shall comply with the provisions of §175.03(l)(1).

(iii) This general license does not authorize the manufacture, assembly, disassembly or repair of strontium-90 sources in ice detection devices.

(9) *Certain items and self-luminous products containing radium-226.*

(i) A general license is hereby issued to any person to acquire, receive, possess, use, or transfer, in accordance with the provisions of subparagraphs (i), (ii), and (iii) of this paragraph, radium-226 contained in the following products manufactured prior to November 30, 2007.

(A) Antiquities originally intended for use by the general public. For the purposes of this clause, “antiquities” means products originally intended for use by the general public and distributed in the late 19th and early 20th centuries, such as radium emanator jars, revigators, radium water jars, radon generators, refrigerator cards, radium bath salts, and healing pads.

(B) Intact timepieces containing greater than 0.037 megabecquerel (1 microcurie), nonintact timepieces, and timepiece hands and dials no longer installed in timepieces.

(C) Luminous items installed in air, marine, or land vehicles.

(D) All other luminous products, provided that no more than 100 items are used or stored at the same location at any one time.

(E) Small radium sources containing no more than 0.037 megabecquerel (1 microcurie) of radium-226. For the purposes of this clause, "small radium sources" means discrete survey instrument check sources, sources contained in radiation measuring instruments, sources used in educational demonstrations (such as cloud chambers and spinthariscopes), electron tubes, lightning rods, ionization sources, static eliminators, or other items as designated by the U.S. Nuclear Regulatory Commission.

(ii) Persons who acquire, receive, possess, use, or transfer byproduct material under the general license issued in subparagraph (i) of this paragraph are exempt from the applicable provisions of this Code, to the extent that the receipt, possession, use, or transfer of byproduct material is within the terms of the general license; provided, however, that this exemption does not apply to any

such person specifically licensed under this Code.

(iii) Any person who acquires, receives, possesses, uses, or transfers byproduct material in accordance with the general license in subparagraph (i) of this paragraph:

(A) Shall notify the Department and the U.S. Nuclear Regulatory Commission if there is any indication of possible damage to the product that appears as if it could result in a loss of the radioactive material. A report containing a brief description of the event and the remedial action taken, must be furnished to the Department and to the Director of the Office of Federal and State Materials and Environmental Management Programs, U.S. Nuclear Regulatory Commission, Washington, DC 20555–0001 within 30 days.

(B) Shall not abandon or dispose of products containing radium-226. The product, and any radioactive material from the product, may only be disposed of according to 10 CFR § 20.2008 or by transfer to a person authorized by a specific license to receive the radium-226 in the product or as otherwise approved by the Department.

(C) Shall not export products containing radium-226 except in accordance with 10 CFR Part 110.

(D) Shall dispose of products containing radium-226 at a disposal facility authorized to dispose of radioactive material in accordance with any federal, state or City solid or hazardous waste law, including the federal Solid Waste Disposal Act, by transfer to a person authorized to receive radium-226 by a specific license issued under §175.101 of this Code, or equivalent regulations of U.S. Nuclear Regulatory Commission or of an agreement state, or as otherwise approved by the U.S. Nuclear Regulatory Commission.

(E) Shall respond to written requests from the Department or the U.S. Nuclear Regulatory Commission to provide information relating to the general license within 30 calendar days of the date of the request, or other time specified in the request. If the general licensee cannot provide the requested information within the allotted time, it shall, within that same time period, request a longer period to supply the information by providing the Department or the U.S. Nuclear Regulatory Commission a written justification for the request.

(iv) The general license in subparagraph (i) of this paragraph does not authorize the manufacture, assembly, disassembly, repair, or import of products containing radium-226, except that timepieces may be disassembled and repaired.

§175.103 Medical use of radioactive materials.

(a) *General information.* (1) *Purpose and scope.* This section establishes the requirements and provisions for the medical use of byproduct material and for issuance of specific licenses authorizing the medical use of this material. These requirements and provisions provide for the radiation safety of workers, the general public, patients, human research subjects, and for the protection of the public health and safety. The requirements and provisions of this section are in addition to, and not in substitution for, others in this Code. The requirements and provisions of this Code apply to applicants and licensees subject to this section unless specifically exempted.

(2) *Provisions for the protection of human research subjects.*

(i) A licensee may conduct research involving human research subjects only if it uses the byproduct materials specified on its license for the uses authorized on its license.

(ii) If the research is conducted, funded, supported, or regulated by another Federal agency that has implemented the Federal Policy for the Protection of Human Subjects (Federal Policy), the licensee shall, before conducting research—

(A) Obtain review and approval of the research from an "Institutional Review Board," as defined and described in the Federal Policy; and

(B) Obtain "informed consent," as defined and described in the Federal Policy, from the human research subject.

(iii) If the research will not be conducted, funded, supported, or regulated by any Federal agency that has implemented the Federal Policy, the licensee shall, before conducting research, apply for and receive a specific amendment to its Department medical use license. The amendment request shall include a written commitment that the licensee will, before conducting research—

(A) Obtain review and approval of the research from an "Institutional Review Board," as defined and described in the Federal Policy; and

(B) Obtain "informed consent", as defined and described in the Federal Policy, from the human research subject.

(iv) Nothing in this section relieves licensees from complying with the other requirements in this Code.

(3) *FDA, other Federal, and State requirements.* Nothing in this Code relieves the licensee from complying with applicable FDA, or other Federal, and State requirements governing radioactive drugs or devices.

(4) *Implementation.*

(i) A Government agency or a Federally recognized Indian Tribe that possesses and uses accelerator-produced radioactive material or discrete sources of radium-226 for which a specific medical use license is required by the Atomic Energy Act of 1954, as amended, shall comply with the requirements of 10 CFR Part 35, including provisions that are specific to licensees, on November 30, 2007. All other persons who possess and use accelerator-produced radioactive material or discrete sources of radium-226 for which a specific medical use license is required, shall comply with the requirements of 10 CFR Part 35, including provisions that are specific to licensees, on August 8, 2009, or earlier as noticed by the NRC.

(ii) Reserved.

(iii) Reserved.

(iv) If a license condition exempted a licensee from a provision of 10 CFR Part 35 on October 24, 2002, then the license condition continues to exempt the licensee from the requirements in the corresponding provision of 10 CFR §§35.1—35.4002.

(v) A licensee shall continue to comply with any license condition that requires it to implement procedures required by §§175.103(h)(5), (h)(12), (h)(13) and (h)(14) of this Code until there is a license amendment or renewal that modifies the license condition.

(vi) When a requirement in this Code differs from the requirement in an existing license condition, the more restrictive (i.e., more protective of health and safety) requirement shall govern.

(5) *License required.*

(i) A person may manufacture, produce, acquire, receive, possess, prepare, use, or transfer byproduct material for medical use only in accordance with a specific license issued by the Commission or an Agreement State, or as allowed in subparagraph (ii) of this subdivision.

(ii) An individual may—

(A) Receive, possess, use, or transfer byproduct material in accordance with the regulations in this Code under the supervision of an authorized user as provided in §175.103(b)(3) of this Code, unless prohibited by license condition; or

(B) Prepare unsealed byproduct material for medical use in accordance with the regulations in this Code under the supervision of an authorized nuclear pharmacist or authorized user as provided in §175.103(b)(3) of this Code, unless prohibited by license condition.

(6) *Application for license, amendment, or renewal.*

(i) An application for a license for medical use of byproduct material shall be submitted and signed by the applicant or a licensee's management. If the application is for medical use sited in a medical institution, only the institution's management may apply. If the application is for medical use not sited in a medical institution, any professional practitioner may apply.

(ii) An application for a license for medical use of byproduct material as described in §§175.103(d)(1)-(2), 175.103(e)(1), 175.103(f)(1), 175.103(g)(1), 175.103(h)(1), and 175.103(i)(1) of this Code shall be made by—

(A) Filing an original and one copy of Form RAD-1, "Application for Radioactive Material License," that includes the facility diagram, equipment, and training and experience qualifications of the Radiation Safety Officer, authorized user(s), authorized medical physicist(s), and authorized nuclear pharmacist(s); and

(B) Submitting procedures required by §§175.103(h)(5), (h)(12), (h)(13) and (h)(14) of this Code as applicable.

(iii) A request for a license renewal shall be made by—

(A) Submitting an original and one copy of Form RAD-1, "Application for Radioactive Material License"; and

(B) Submitting procedures required by §§175.103(h)(5), (h)(12), (h)(13) and (h)(14) of this Code, as applicable.

(iv) A request for a license amendment shall be made by—

(A) Submitting an original and one copy of either—

(a) Form RAD-1, "Application for Radioactive Material License"; or

(b) A letter requesting the amendment; and

(B) Submitting procedures required by §§175.103(h)(5), (h)(12), (h)(13) and (h)(14) of this Code, as applicable.

(v) In addition to the requirements in subparagraphs (ii) through (iv) of this paragraph, an application for a license or amendment for medical use of byproduct material as described in §175.103(i)(1) of this Code shall also include information regarding any radiation safety aspects of the medical use of the material that is not addressed in Subparts A through C of 10 CFR Part 35.

(A) The applicant shall also provide specific information on—

(a) Radiation safety precautions and instructions;

(b) Methodology for measurement of dosages or doses to be administered to patients or human research subjects; and

(c) Calibration, maintenance, and repair of instruments and equipment necessary for radiation safety.

(B) The applicant or licensee shall also provide any other information requested by the Department in its review of the application.

(vi) An applicant that satisfies the requirements specified in §33.13 of Title 10 of the CFR may apply for a specific license of broad scope.

(7) *License amendments.* A licensee shall apply for and shall receive a license amendment—

(i) Before it receives, prepares, or uses byproduct material for a type of use that is permitted

under this Code, but is not authorized on the licensee's current license issued under this Code; except that—

(A) A Government agency or a Federally recognized Indian Tribe licensee who possesses and uses accelerator-produced radioactive material or discrete sources of radium-226 may continue to use such material for medical uses permitted under 10 CFR Part 35 until the date of the NRC's final licensing determination, provided that the licensee has submitted an amendment application on or before June 2, 2008.

(B) Except as provided in clause (A) of this subparagraph, all other licensees who possess and use accelerator-produced radioactive material or discrete sources of radium-226 may continue to use those materials for medical uses permitted under 10 CFR Part 35 until the date of the NRC's final licensing determination, provided that the person submits a medical use license amendment request within 6 months from the waiver expiration date of August 7, 2009 or within 6 months from the date of an earlier termination of the waiver as noticed by the NRC, whichever date is earlier.

(ii) Before it permits anyone except a visiting authorized user to work as an authorized user, authorized nuclear pharmacist, or authorized medical physicist under the license, except—

(A) For an authorized user, an individual who meets the requirements in §§175.103(j)(4)(i), 175.103(j)(5)(i), 175.103(j)(6)(i), 175.103(j)(7)(i), 175.103(j)(8)(i), 175.103(j)(10)(i), 175.103(j)(12)(i), and 175.103(j)(13)(i) of this Code;

(B) For an authorized nuclear pharmacist, an individual who meets the requirements in §§175.103(j)(3) and 175.103(j)(15) of this Code;

(C) For an authorized medical physicist, an individual who meets the requirements in §§175.103(j)(2) and 175.103(j)(15) of this Code;

(D) An individual who is identified as an authorized user, an authorized nuclear pharmacist, or authorized medical physicist—

(a) On a Commission or Agreement State license or other equivalent permit or license recognized by NRC that authorizes the use of byproduct material in medical use or in the practice of nuclear pharmacy;

(b) On a permit issued by a Commission or Agreement State specific license of broad scope that is authorized to permit the use of byproduct material in medical use or in the practice of nuclear pharmacy;

(c) On a permit issued by a Commission master material licensee that is authorized to permit the use of byproduct material in medical use or in the practice of nuclear pharmacy; or

(d) By a commercial nuclear pharmacy that has been authorized to identify authorized nuclear pharmacists.

(E) A physician, podiatrist, or dentist who used only accelerator-produced radioactive materials, discrete sources of radium-226, or both, for medical uses or a nuclear pharmacist who used only accelerator-produced radioactive materials in the practice of nuclear pharmacy at a Government agency or Federally recognized Indian Tribe before November 30, 2007 or at all other locations of use before August 8, 2009, or an earlier date as noticed by the NRC, and for only those materials and uses performed before these dates.

(iii) Before it changes Radiation Safety Officers, except as provided in §175.103(b)(2)(iii) of this Code;

(iv) Before it receives byproduct material in excess of the amount or in a different form, or receives a different radionuclide than is authorized on the license;

(v) Before it adds to or changes the areas of use identified in the application or on the license, including areas used in accordance with either §175.103(d)(1) or §175.103(d)(2) of this Code if the change includes addition or relocation of either an area where PET radionuclides are produced or a PET radioactive drug delivery line from the PET radionuclide/PET radioactive drug production area. Other areas of use where byproduct material is used only in accordance with either §175.103(d)(1) or §175.103(d)(2) of this Code are exempt;

(vi) Before it changes the address(es) of use identified in the application or on the license; and

(vii) Before it revises procedures required by §§175.103(h)(5),(12),(13) and (14) of this Code, as applicable, where such revision reduces radiation safety.

(viii) Before changing statements, representations, and procedures that are incorporated by reference into the license.

(8) *Notifications.*

(i) A licensee shall provide the Department a copy of the board certification and the written attestation(s), signed by a preceptor, the Commission or Agreement State license, the permit issued by a Commission master material licensee, the permit issued by a Commission or Agreement State licensee of broad scope, the permit issued by a Commission master material license broad scope permittee, or documentation that only accelerator-produced radioactive materials, discrete sources of radium-226, or both, were used for medical use or in the practice of nuclear pharmacy at a Government agency or Federally recognized Indian Tribe before November 30, 2007 or at all other locations of use before August 8, 2009, or an earlier date as noticed by the NRC, and for each individual no later than 30 days after the date that the licensee permits the individual to work as an authorized user, an authorized nuclear pharmacist, or an authorized medical physicist, under §175.103(a)(7)(ii) of this Code. For individuals permitted to work under §175.103(a)(7)(ii)(D) of this Code, within the same 30-day time frame, the licensee shall also provide, as appropriate, verification of completion of;

(A) Any additional case experience required in §175.103(j)(6)(ii)(A) for an authorized user under §175.103(e)(1) of this Code;

(B) Any additional training required in §175.103(j)(13)(iii) for an authorized user under §175.103(h)(1) of this Code; and

(C) Any additional training required in §175.103(j)(2)(iii) of this Code for an authorized medical physicist.

(ii) A licensee shall notify the Department no later than 30 days after:

(A) An authorized user, an authorized nuclear pharmacist, a Radiation Safety Officer, or an authorized medical physicist permanently discontinues performance of duties under the license or has a name change. This requirement is not intended to relieve the licensee of the requirements of §175.103(a)(4) of this Code.

(B) The licensee permits an authorized user or an individual qualified to be a Radiation Safety Officer, under §§175.103(j)(1) and 175.103(j)(15) of this Code, to function as a temporary Radiation Safety Officer and to perform the functions of a Radiation Safety Officer in accordance with §175.103(b)(2) of this Code.

(C) The licensee's mailing address changes;

(D) The licensee's name changes, but the name change does not constitute a transfer of control of the license as described in 10 CFR §30.34(b); or

(E) The licensee has added to or changed the areas of use identified in the application or on the license where byproduct material is used in accordance with either §175.103(d)(1) or §175.103(d)(2) of this Code if the change does not include addition or relocation of either an area

where PET radionuclides are produced or a PET radioactive drug delivery line from the PET radionuclide/PET radioactive drug production area.

(iii) The licensee shall send the documents required in this section to the Department at the address identified in §175.01 of this Code.

(9) *Exemptions regarding specific licenses of broad scope.* A licensee possessing a specific license of broad scope for medical use, issued under 10 CFR Part 33, is exempt from—

(i) The provisions of §175.103(a)(6)(v) of this Code regarding the need to file an amendment to the license for medical use of byproduct material, as described in §175.103(i)(1) of this Code;

(ii) The provisions of §175.103(a)(7)(ii) of this Code;

(iii) The provisions of §175.103(a)(7)(v) of this Code regarding additions to or changes in the areas of use at the addresses identified in the application or on the license;

(iv) The provisions of §175.103(a)(8)(i) of this Code;

(v) The provisions of §175.103(a)(8)(ii)(A) of this Code for an authorized user, an authorized nuclear pharmacist, or an authorized medical physicist;

(vi) The provisions of §175.103(a)(8)(ii)(E) of this Code.

(vii) The provisions of §175.103(b)(6)(i) of this Code.

(10) *License issuance.*

(i) The Department shall issue a license for the medical use of byproduct material if— (A) The applicant has filed RAD-1, "Application for Radioactive Material License" in accordance with the instructions in §175.103(a)(6) of this Code;

(B) The applicant has paid any applicable fee;

(C) The Department finds the applicant equipped and committed to observe the safety standards established by the Department in this Code for the protection of the public health and safety; and

(D) The applicant meets the requirements of 10 CFR Part 30.

(ii) The Department shall issue a license for mobile medical service if the applicant:

(A) Meets the requirements in subparagraph (i) of this paragraph; and

(B) Assures that individuals or human research subjects to whom unsealed byproduct material or radiation from implants containing byproduct material will be administered may be released following treatment in accordance with §175.103(c)(9) of this Code.

(11) *Specific exemptions.* The Department may, upon application of any interested person or upon its own initiative, grant exemptions from the regulations in this Code that it determines are authorized by law and will not endanger life or property and are otherwise in the public interest.

(b) *General administrative requirements.*

(1) *ALARA Program.* (i) Each licensee shall develop and implement a written program to maintain radiation doses and releases of radioactive material in effluents to unrestricted areas to be As Low As Reasonably Achievable (ALARA) in accordance with this subdivision.

(ii) To satisfy the requirement of §175.103(b)(1)(i) of this Code:

(A) for licensees that are medical institutions, the management, radiation safety officer and all authorized users shall participate in the establishment, implementation, and operation of the program as required by this Code or required by the radiation safety committee; or

(B) for licensees that are not medical institutions, management and all authorized users shall participate in the program as requested by the radiation safety officer.

(iii) The ALARA program shall include notice to workers of the program's existence and workers' responsibility to help keep dose equivalents ALARA.

(iv) The ALARA program shall include an annual review by the radiation safety committee for licensees that are medical institutions, or management, all authorized users and the radiation safety officer for licensees that are not medical institutions, of summaries of the types and amounts of radioactive material used, occupational dose reports, and continuing education and training for all personnel who work with or in the vicinity of radioactive material.

(v) The purpose of the review required by subparagraph (iv) of this paragraph is to ensure that individuals make every reasonable effort to maintain occupational doses, doses to the general public, and releases of radioactive material to unrestricted areas as low as reasonably achievable, taking into account the state of technology, and the cost of improvements in relation to benefits.

(vi) The licensee shall retain a current written description of the ALARA program for the duration of the license. The written description shall include:

(A) a commitment by management to keep occupational doses as low as reasonably achievable;

(B) a requirement that the radiation safety officer brief management once each year on the radiation safety program;

(C) personnel exposure investigational levels that, when exceeded, will initiate an investigation by the radiation safety officer of the cause of the exposure; and

(D) personnel exposure investigational levels that, when exceeded, will initiate a prompt investigation by the radiation safety officer of the cause of the exposure and a consideration of actions that might be taken to reduce the probability of recurrence.

(2) *Authority and responsibilities for the radiation protection program.*

(i) A licensee's management shall appoint a Radiation Safety Officer, who agrees, in writing, to be responsible for implementing the radiation protection program. The licensee, through the Radiation Safety Officer, shall ensure that radiation safety activities are being performed in accordance with licensee-approved procedures and regulatory requirements.

(ii) The radiation safety officer shall:

(A) investigate overexposures, medical events, accidents, spills, losses, thefts, unauthorized receipts, uses, transfers, and disposals, and other deviations from approved radiation safety practice and implement corrective actions as necessary;

(B) establish, implement and maintain written policy and procedures for:

(a) authorizing the purchase of radioactive material;

(b) receiving and opening packages of radioactive material;

(c) storing radioactive material;

(d) keeping an inventory record of radioactive material;

(e) using radioactive material safely;

(f) taking emergency action if control of radioactive material is lost;

(g) performing periodic radiation surveys;

(h) performing checks of survey instruments and other safety equipment;

(i) disposing of radioactive material;

(j) training personnel who work in or frequent areas where radioactive material is used or stored; and

(k) keeping copies of this Code, all records and reports required by this Code, each licensing request and license and amendments, and the written policies and procedures required by this Code;

(C) brief management at least once each year on the radioactive materials program; and

(D) for medical use sited at a medical institution, assist the radiation safety committee in the performance of its duties; or

(E) for medical use not sited at a medical institution, approve or disapprove radiation safety program changes with the advice and consent of management prior to submittal to the Department for licensing action.

(3) *Radiation safety committee.* Each medical institution licensee shall establish a radiation safety committee to oversee the use of radioactive material.

(i) The committee shall meet the following administrative requirements:

(A) Licensees that are authorized for two or more different types of uses of byproduct material under Subparts E, F, and H of 10 CFR Part 35, or two or more types of units under Subpart H of 10 CFR Part 35, shall establish a Radiation Safety Committee to oversee all uses of byproduct material permitted by the license. The Committee shall include an authorized user of each type of use permitted by the license, the Radiation Safety Officer, a representative of the nursing service, and a representative of management who is neither an authorized user nor a Radiation Safety Officer. The Committee may include other members the licensee considers appropriate.

(B) The committee shall meet at least quarterly.

(C) To establish a quorum and to conduct business, at least one-half of the committee's membership shall be present, including the radiation safety officer and the management's representative.

(D) The minutes of each radiation safety committee meeting shall include:

(a) the date of the meeting;

(b) members present;

(c) members absent;

(d) summary of deliberations and discussions;

(e) recommended actions and the numerical results of all ballots; and

(f) document any reviews required by §175.103(b)(1)(iv) and (b)(3)(ii) of this Code.

(E) The committee shall provide each member with a copy of the meeting minutes, and retain one copy for the duration of the license.

(ii) To oversee the use of licensed material, the committee shall:

(A) be responsible for monitoring the institutional program to maintain individual and collective doses as low as reasonably achievable;

(B) review, on the basis of safety and with regard to the training and experience standards of this Code, and approve or disapprove any individual who is to be listed as an authorized user, the radiation safety officer, or authorized medical physicist before submitting a license application or request for amendment or renewal;

(C) review on the basis of safety and approve or disapprove each proposed method of use of radioactive material;

(D) review on the basis of safety, and approve or disapprove with the advice and consent of the radiation safety officer and the management representative, minor changes in radiation safety procedures that are not potentially important to safety and are permitted under §175.103(b)(3)(iii) of this Code;

(E) review on the basis of safety, and approve or disapprove with the advice and consent of the radiation safety officer and the management representative, procedures and radiation safety program changes prior to submittal to the Office of Radiological Health for licensing action;

(F) review quarterly, with the assistance of the radiation safety officer, occupational radiation exposure records of all personnel working with radioactive material;

(G) review quarterly, with the assistance of the radiation safety officer, all incidents involving radioactive material with respect to cause and subsequent actions taken;

(H) review annually, with the assistance of the radiation safety officer, the radioactive materials program; and

(I) establish a table of investigational levels for occupational dose that, when exceeded, will initiate investigations and considerations of action by the radiation safety officer.

(iii) A licensee may make minor changes in radiation safety procedures that are not potentially important to safety (e.g., editing of procedures for clarity, updating names or telephone numbers, replacement of equipment or assignment of service contracts), except for changes in §175.103(a)(4) or §175.103(i)(3) of this Code. A licensee is responsible for assuring that any change made is in compliance with the requirements of this Code and the license.

(iv) A licensee shall retain a record of each change made pursuant to §175.103 (b)(3)(iii) of this Code until the license has been renewed or terminated. The record shall include the effective date of the change, a copy of the old and new radiation safety procedures, the reason for the change, a summary of radiation safety matters that were considered before making the change, the signature of the radiation safety officer, and the signatures of the affected authorized user and of management or, in a medical institution, the radiation safety committee's chairman and the management representative.

(4) *Statement of authorities and responsibilities.* (i) A licensee shall provide the radiation safety officer, and at a medical institution, the radiation safety committee, sufficient authority and organizational freedom to:

(A) identify radiation safety problems;

(B) initiate, recommend, or provide corrective actions; and

(C) verify implementation of corrective actions.

(ii) A licensee shall establish in writing the authorities, duties, responsibilities, and radiation safety activities of the radiation safety officer, and at a medical institution the radiation safety committee, and retain the current edition of these statements for the duration of the license

(5) *Supervision.* (i) A licensee that permits the receipt, possession, use, or transfer of byproduct material by an individual under the supervision of an authorized user, as allowed by §175.103(a)(5)(ii)(A) of this Code, shall--

(A) In addition to the requirements in 10 CFR §19.12, instruct the supervised individual in the licensee's written radiation protection procedures, written directive procedures, regulations of this Code, and license conditions with respect to the use of byproduct material; and

(B) Require the supervised individual to follow the instructions of the supervising authorized user for medical uses of byproduct material, written radiation protection procedures established by the licensee, written directive procedures, regulations of this Code, and license conditions with respect to the medical use of byproduct material.

(ii) A licensee that permits the preparation of byproduct material for medical use by an individual under the supervision of an authorized nuclear pharmacist or physician who is an authorized user, as allowed by §175.103(a)(5)(ii)(B) of this Code, shall—

(A) In addition to the requirements in 10 CFR §19.12, instruct the supervised individual in the preparation of byproduct material for medical use, as appropriate to that individual's involvement with byproduct material; and

(B) Require the supervised individual to follow the instructions of the supervising authorized user or authorized nuclear pharmacist regarding the preparation of byproduct material for medical use, written radiation protection procedures established by the licensee, the regulations of this Code, and license conditions.

(iii) Personnel, duly licensed by the New York State Department of Health to practice nuclear medicine technology, other than physicians or registered professional nurses, at licensees involved in the performance of diagnostic procedures utilizing radioactive material which includes performing parenteral administration of radioactive material by intravenous, intramuscular or subcutaneous methods, shall:

(A) have satisfactorily completed an educational program in nuclear medicine technology accredited by the Committee on Allied Health Education and Accreditation or the accrediting agency of the state in which the program was completed, provided such state accreditation requires education and training in the above methods of parenteral administration; or

(B) possess certification as a nuclear medicine technologist by the American Registry of Radiologic Technologists or certification by the Nuclear Medicine Technology Board; and

(C) prior to permitting parenteral administration by a nuclear medicine technologist, the medical board of a hospital, a physician, or the radiation safety committee of an institution who have no medical board, shall adopt with governing authority approval:

(a) procedures to assure that the nuclear medicine technologist possesses the education and training or certification set forth in §175.103(b)(5)(iii) of this Code and is proficient in the competent performance of parenteral administration; and

(b) requirements for authorized user physician which at a minimum shall require supervision by such a physician when parenteral administration of radioactive material for diagnostic testing is performed by a qualified nuclear medicine technologist.

(iv) A licensee that permits supervised activities under subparagraphs (i) and (ii) of this paragraph is responsible for the acts and omissions of the supervised individual.

(6) *Written directives.* (i) A written directive shall be dated and signed by an authorized user before the administration of I-131 sodium iodide greater than 1.11 megabecquerels (MBq) (30 microcuries (mCi)), any therapeutic dosage of unsealed byproduct material or any therapeutic dose of radiation from byproduct material.

(A) If, because of the emergent nature of the patient's condition, a delay in order to provide a written directive would jeopardize the patient's health, an oral directive is acceptable. The information contained in the oral directive shall be documented as soon as possible in writing in the patient's record. A written directive shall be prepared within 48 hours of the oral directive.

(ii) The written directive shall contain the patient or human research subject's name and the following information—

(A) For any administration of quantities greater than 1.11 MBq (30mCi) of sodium iodide I-131: the dosage;

(B) For an administration of a therapeutic dosage of unsealed byproduct material other than sodium iodide I-131: the radioactive drug, dosage, and route of administration;

(C) For gamma stereotactic radiosurgery: the total dose, treatment site, and values for the target coordinate settings per treatment for each anatomically distinct treatment site;

(D) For teletherapy: the total dose, dose per fraction, number of fractions, and treatment site;

(E) For high dose-rate remote afterloading brachytherapy: the radionuclide, treatment site, dose per fraction, number of fractions, and total dose; or

(F) For all other brachytherapy, including low, medium, and pulsed dose rate remote afterloaders:

(a) Before implantation: treatment site, the radionuclide, and dose; and

(b) After implantation but before completion of the procedure: the radionuclide, treatment site, number of sources, and total source strength and exposure time (or the total dose).

(iii) A written revision to an existing written directive may be made if the revision is dated and signed by an authorized user before the administration of the dosage of unsealed byproduct material, the brachytherapy dose, the gamma stereotactic radiosurgery dose, the teletherapy dose, or the next fractional dose.

(A) If, because of the patient's condition, a delay in order to provide a written revision to an existing written directive would jeopardize the patient's health, an oral revision to an existing written directive is acceptable. The oral revision shall be documented as soon as possible in the patient's record. A revised written directive shall be signed by the authorized user within 48 hours of the oral revision.

(iv) The licensee shall retain a copy of the written directive in accordance with §175.03(k)(12) of this Code.

(7) *Procedures for administrations requiring a written directive.*

(i) For any administration requiring a written directive, the licensee shall develop, implement, and maintain written procedures to provide high confidence that:

(A) The patient's or human research subject's identity is verified before each administration; and

(B) Each administration is in accordance with the written directive.

(ii) At a minimum, the procedures required by subparagraph (i) of this paragraph shall address the following items that are applicable to the licensee's use of byproduct material—

(A) Verifying the identity of the patient or human research subject;

(B) Verifying that the administration is in accordance with the treatment plan, if applicable, and the written directive;

(C) Checking both manual and computer-generated dose calculations; and

(D) Verifying that any computer-generated dose calculations are correctly transferred into the consoles of therapeutic medical units authorized by §§175.103(h)(1) or 175.103(i)(1) of this Code.

(iii) A licensee shall retain a copy of the procedures required under paragraph (i) in accordance with §175.03(k)(13) of this Code.

(8) *Suppliers.* For medical use, a licensee may only use—

(i) Sealed sources or devices manufactured, labeled, packaged, and distributed in accordance with a license issued under 10 CFR Part 30 and 10 CFR §32.74, or equivalent requirements of an Agreement State;

(ii) Sealed sources or devices non-commercially transferred from a 10 CFR Part 35 licensee or an Agreement State medical use licensee;

(iii) Teletherapy sources manufactured and distributed in accordance with a license issued under 10 CFR Part 30 or the equivalent requirements of an Agreement State;

(iv) Radioactive material manufactured, labeled, packaged, and distributed in accordance with a license issued for such activities by an Agreement State or the U.S. Nuclear Regulatory Commission; and

(v) Reagent kits that have been manufactured, labeled, packaged, and distributed in accordance with an approval issued by the U.S. Department of Health and Human Services, Food and Drug Administration ("FDA").

(c) *General technical requirements.*

(1) *Possession, use, calibration, and check of dose calibrators.* (i) A medical use licensee authorized to administer radioactive materials shall possess a dose calibrator and use it to measure the amount of activity administered to each patient.

(ii) A licensee shall:

(A) check each dose calibrator for constancy with a dedicated check source at the beginning of each day of use. To satisfy this requirement, the check shall be done on a frequently used setting with a sealed source of not less than 370 kBq (10mCi) of radium-226 or 1.85 MBq (50mCi) of any other photon-emitting radionuclide with a half-life greater than 90 days;

(B) test each dose calibrator for accuracy upon installation and at intervals not to exceed 12 months thereafter by assaying at least 2 sealed sources containing different radionuclides, the activity of which the manufacturer has determined by traceability to a national standard to be within 5 percent of the stated activity, with minimum activity of 370 kBq (10mCi) for radium-226 and 1.85 MBq (50mCi) for any other photon-emitting radionuclide, and at least one of which has a principal photon energy between 100 keV and 500 keV;

(C) test each dose calibrator for linearity upon installation and at intervals not to exceed three months thereafter over the range of use between 370 kBq (10mCi) and the highest dosage that will be administered; and

(D) test each dose calibrator for geometry dependence upon installation over the range of volumes and volume configurations for which it will be used. The licensee shall keep a record of this test for the duration of the use of the dose calibrator.

(iii) Notwithstanding the provisions of §175.103(c)(1)(ii) of this Code, a licensee that shall use a dose calibrator to measure the activity of beta-emitting radioactive materials to be administered to a patient shall perform additional checks specified in §175.103(c)(1)(ii)(A) and (B) of this Code using the same radionuclide to be administered and having an activity of at least 50 percent, but not more than 200 percent, of the prescribed activity or by equivalent procedures approved by the Department. Records shall be kept pursuant to §175.103(c)(1)(vi) of this Code.

(iv) A licensee shall mathematically correct dosage readings for any geometry or linearity error that exceeds ±10 percent if the dosage is greater than 370 kBq (10mCi) and shall repair or replace the dose calibrator if the accuracy or constancy error exceeds ±10 percent.

(v) A licensee shall also perform checks and tests required by §175.103(c)(1)(ii) of this Code following adjustment or repair of the dose calibrator.

(vi) A licensee shall retain a record of each check and test required by §175.103(c)(1)(ii), (iii), and (v) of this Code for 3 years. Such records shall include:

(A) for §175.103(c)(1)(ii)(A) of this Code, the models and serial numbers of the dose calibrator and check source, the identity and calibrated activity of the radionuclide contained in the check source, the date of the check, the activity measured, the instrument settings, and the name of the individual who performed the check;

(B) for §175.103(c)(1)(ii)(B) of this Code, the model and serial number of the dose calibrator, the model and serial number of each source used and the identity of the radionuclide contained in the source and its activity, proof of traceability to a national standard, the date of the test, the results of the test, the instrument settings, and the signature of the radiation safety officer;

(C) for §175.103(c)(1)(ii)(C) of this Code, the model and serial number of the dose calibrator, the calculated activities, the measured activities, the date of the test, and the signature of the radiation safety officer; and

(D) for §175.103(c)(1)(ii)(D) of this Code, the model and serial number of the dose calibrator, the configuration and calibrated activity of the source measured, the activity of the source, the activity measured and the instrument setting for each volume measured, the date of the test, and the signature of the radiation safety officer.

(2) *Possession, use, and calibration of instruments used to measure the activity of unsealed byproduct material.*

(i) For direct measurements performed in accordance with §175.103(c)(4) of this Code, a licensee shall possess and use instrumentation to measure the activity of unsealed byproduct material before it is administered to each patient or human research subject.

(ii) A licensee shall calibrate the instrumentation required in subparagraph (i) of this paragraph in accordance with nationally recognized standards or the manufacturer's instructions.

(iii) A licensee shall retain a record of each instrument calibration required by this paragraph in accordance with §175.03(k)(14) of this Code.

(3) *Calibration of survey instruments.*

(i) A licensee shall calibrate the survey instruments used to show compliance with this Code and before first use, annually, and following a repair that affects the calibration.

(ii) To satisfy the requirements of §175.103(c)(3)(i) of this Code, the licensee shall:

(A) Calibrate all scales with readings up to 10 mSv (1000 mrem) per hour with a radiation source, the intensity of which is determined to within 10 percent accuracy;

(B) Calibrate two separated readings at approximately one-third and two-thirds of the full scale reading on each scale or decade that will be used to show compliance; and

(C) Conspicuously note on the instrument the apparent exposure rate from a dedicated check source as determined at the time of calibration, and the date of calibration.

(iii) To satisfy the requirements of §175.103(c)(2)(ii) of this Code, the licensee shall:

(A) consider a point as calibrated if the indicated exposure rate differs from the calculated exposure rate by not more than 10 percent; and

(B) consider a point as calibrated if the indicated exposure rate differs from the calculated exposure rate by not more than 20 percent and if a correction chart or graph is conspicuously attached to the instrument.

(C) A licensee may not use survey instruments if the difference between the indicated exposure rate and the calculated exposure rate is more than 20 percent.

(iv) To meet the requirements of §175.103(c)(3)(i), (ii) and (iii) of this Code, the licensee shall perform such calibrations as authorized by specific license condition or shall obtain the services of persons licensed by the U.S. Nuclear Regulatory Commission or an agreement state to perform calibrations of survey instruments.

(v) A licensee shall check each survey instrument for proper operation with the dedicated check source before each use. The licensee shall not be not required to keep records of these checks.

(vi) A licensee shall retain a record of each survey instrument calibration in accordance with §175.03(k)(15) of this Code.

(4) *Determination of dosages of unsealed byproduct material for medical use.*

(i) A licensee shall determine and record the activity of each dosage before medical use.

(ii) This determination shall be made by direct measurement of radioactivity.

(iii) Unless otherwise directed by the authorized user, a licensee may not use a dosage if the dosage does not fall within the prescribed dosage range or if the dosage differs from the prescribed dosage by more than 20 percent.

(iv) A licensee shall retain a record of the dosage determination required by this section in accordance with §175.03(k)(16) of this Code.

(5) *Authorization for calibration, transmission, and reference sources.* Any person authorized by §175.103(a)(5) of this Code for medical use of byproduct material may receive, possess, and

use any of the following byproduct material for check, calibration, transmission, and reference use.

(i) Sealed sources, not exceeding 1.11 GBq (30 mCi) each, manufactured and distributed by a person licensed under 10 CFR §32.74 or equivalent Agreement State regulations.

(ii) Sealed sources, not exceeding 1.11 GBq (30 mCi) each, redistributed by a licensee authorized to redistribute the sealed sources manufactured and distributed by a person licensed under 10 CFR §32.74 or equivalent Agreement State regulations, providing the redistributed sealed sources are in the original packaging and shielding and are accompanied by the manufacturer's approved instructions.

(iii) Any byproduct material with a half-life not longer than 120 days in individual amounts not to exceed 0.56 GBq (15 mCi).

(iv) Any byproduct material with a half-life longer than 120 days in individual amounts not to exceed the smaller of 7.4 MBq (200 mCi) or 1000 times the quantities in Appendix B of 10 CFR Part 30.

(v) Technetium-99m in amounts as needed.

(6) *Requirements for possession of sealed sources and brachytherapy sources.*

(i) A licensee in possession of any sealed source or brachytherapy source shall follow the radiation safety and handling instructions supplied by the manufacturer.

(ii) A licensee in possession of a sealed source shall—

(A) Test the source for leakage before its first use unless the licensee has a certificate from the supplier indicating that the source was tested within 6 months before transfer to the licensee; and

(B) Test the source for leakage at intervals not to exceed 6 months or at other intervals approved by the Commission or an Agreement State in the Sealed Source and Device Registry.

(iii) To satisfy the leak test requirements of this section, the licensee shall measure the sample so that the leak test can detect the presence of 185 Bq (0.005 mCi) of radioactive material in the sample.

(iv) A licensee shall retain leak test records in accordance with §175.03(k)(17)(i) of this Code.

(v) If the leak test reveals the presence of 185 Bq (0.005 mCi) or more of removable contamination, the licensee shall—

(A) Immediately withdraw the sealed source from use and store, dispose, or cause it to be repaired in accordance with the requirements in Parts 20 and 30 of 10 CFR; and

(B) File a report within 5 days of the leak test in accordance with §175.03(l)(10) of this Code.

(vi) A licensee need not perform a leak test on the following sources:

(A) Sources containing only byproduct material with a half-life of less than 30 days;

(B) Sources containing only byproduct material as a gas;

(C) Sources containing 3.7 MBq (100 mCi) or less of beta or gamma-emitting material or 0.37 MBq (10 mCi) or less of alpha-emitting material;

(D) Seeds of iridium-192 encased in nylon ribbon; and

(E) Sources stored and not being used. However, the licensee shall test each such source for leakage before any use or transfer unless it has been leak tested within 6 months before the date of use or transfer.

(vii) A licensee in possession of sealed sources or brachytherapy sources, except for gamma stereotactic radiosurgery sources, shall conduct a physical inventory of all such sources in its possession at intervals not to exceed three months. The licensee shall retain each inventory record in accordance with §175.03(k)(17)(ii) of this Code.

(viii) A licensee in possession of a sealed source or brachytherapy source shall survey with a radiation survey instrument at intervals not to exceed 3 months all areas where such sources are stored. This shall not apply to teletherapy sources in teletherapy units or sealed sources in diagnostic devices.

(ix) A licensee shall retain a record of each survey required in §175.103(c)(5)(iii) of this Code for 3 years. The record shall include the date of the survey, a sketch of each area that was surveyed, the measured dose rate at several points in each area expressed in microsieverts (mrem) per hour, the model number and serial number of the survey instrument used to make the survey, and the signature of the radiation safety officer.

(7) *Labeling of vials and syringes.* Each syringe and vial that contains unsealed byproduct material shall be labeled to identify the radioactive drug. Each syringe shield and vial shield shall also be labeled unless the label on the syringe or vial is visible when shielded.

(8) *Surveys for contamination and ambient radiation exposure rate.*

(i) In addition to the surveys required by §175.03 of this Article, a licensee shall survey with a radiation detection survey instrument at the end of each day of use all areas where unsealed byproduct material requiring a written directive was prepared for use or administered.

(ii) A licensee does not need to perform the surveys required by paragraph (a) of this section in an area(s) where patients or human research subjects are confined when they cannot be released under §175.103(c)(9) of this Code.

(iii) A licensee shall survey with a radiation detection survey instrument at least once each week all areas where unsealed byproduct materials or radioactive wastes are stored.

(iv) A licensee shall conduct the surveys required by §175.103(c)(8)(i) and (ii) of this Code so as to be able to detect and measure dose rates as low as 1 Sv (0.1 mrem) per hour.

(v) A licensee shall establish dose rate action levels for the surveys required by §175.103(c)(8)(i) and (ii) of this Code and shall require that the individual performing the survey immediately notify the radiation safety officer if a dose rate exceeds an action level.

(vi) A licensee shall perform wipe tests for removable contamination once each week on all areas where radioactive materials are routinely prepared for use or administered and where unsealed sources of radioactive materials are stored.

(vii) A licensee shall perform the wipe tests required by §175.103(c)(8)(v) of this Code so as to be able to detect contamination on each wipe sample of 35 Bq (2000 disintegrations or transformations per minute).

(viii) A licensee shall establish removable contamination action levels for the surveys required by §175.103(c)(8)(v) and shall require that the individual performing the survey immediately notify the radiation safety officer if contamination exceeds action levels.

(ix) A licensee shall retain a record of each survey or wipe test required by §175.103(c)(8)(i), (ii) and (v) of this section for 3 years. The record shall include the date of the survey, a sketch of each area surveyed, action levels established for each area, the measured dose rate at several points in each area expressed in Sv (mrem) per hour or the removable contamination in each area expressed in becquerels (disintegrations or transformations per minute) per 100 square centimeters, the serial number and the model number of the instrument used to make the survey or analyze the samples, and the initials of the individual who performed the survey.

(x) A licensee shall retain a record of each survey in accordance with §175.03(k)(18) of this Code.

(9) *Release of individuals containing unsealed byproduct material or implants containing byproduct material.*

(i) A licensee may authorize the release from its control of any individual who has been administered unsealed byproduct material or implants containing byproduct material if the total effective dose equivalent to any other individual from exposure to the released individual is not likely to exceed 5 mSv (0.5 rem).*

(ii) A licensee shall provide the released individual, or the individual's parent or guardian, with instructions, including written instructions, on actions recommended to maintain doses to other individuals as low as is reasonably achievable if the total effective dose equivalent to any other individual is likely to exceed 1 mSv (0.1 rem). If the total effective dose equivalent to a nursing infant or child could exceed 1 mSv (0.1 rem) assuming there were no interruption of breast-feeding, the instructions shall also include-

(A) Guidance on the interruption or discontinuation of breast-feeding; and

(B) Information on the potential consequences, if any, of failure to follow the guidance.

(iii) A licensee shall maintain a record of the basis for authorizing the release of an individual in accordance with §175.03(k)(19)(i) of this Code.

(iv) The licensee shall maintain a record of instructions provided to a breast-feeding female in accordance with §175.03(k)(19)(ii) of this Code.

(v) *Radioactive cadavers.* (A) If any patient containing radioactive material administered/implanted for therapeutic purposes dies, it shall be the responsibility of the physician who pronounces such patient as dead to notify immediately the physician in charge of the case or such physician's designated representative.

(B) No person shall commence any autopsy on any cadaver that contains more than 185 MBq (5 mCi) of radioactive material administered/implanted for therapeutic purposes without first having consulted with, and having been advised by, the radiation safety officer of the hospital or the physician responsible for the administration/implantation of the radioactive material. If neither is available, a designated representative may serve.

(C) A radioactivity report on every cadaver containing more than 185 MBq (5 mCi) of radioactive material administered/implanted for therapeutic purposes shall be completed by the radiation safety officer or the physician responsible for the administration of the radioactive material or their designated representative. The report shall include the name, address and radioactive materials license number of the hospital; the name of the deceased; the name, address and telephone number of the next of kin; the name, address and telephone number of the funeral home to which the deceased will be sent; the radionuclide involved; the approximate activity on the date of the report and the physical form; the location(s) of the radioactive materials within the body and the external dose rate at the body surface closest to the source; the precautions to be observed during autopsy or handling of the body by the funeral director; and the name of the person who prepared the form. This report shall accompany the body, whether autopsied or not, when it is surrendered to the funeral director. The Department shall be notified in person, by telephone, by mailgram or by facsimile within 24 hours of the death and a copy of the radioactivity report shall be sent to the Department within fifteen (15) days of the date of death.

(10) *Storage of volatiles and gases.* (i) A licensee shall store volatile radiopharmaceuticals and radioactive gases in the shippers' radiation shield and container.

(ii) After drawing the first dosage, a licensee shall store and use a multidose container in a properly functioning fume hood.

(11) *Decay-in-storage.*

(i) A licensee may hold byproduct material with a physical half-life of less than or equal to 120 days for decay-in-storage before disposal without regard to its radioactivity if it—

(A) Monitors byproduct material at the surface before disposal and determines that its radioactivity cannot be distinguished from the background radiation level with an appropriate radiation detection survey meter set on its most sensitive scale and with no interposed shielding; and

(B) Removes or obliterates all radiation labels, except for radiation labels on materials that are within containers and that will be managed as biomedical waste after they have been released from the licensee.

(ii) A licensee shall retain a record of each disposal permitted under subparagraph (i) of this paragraph in accordance with §175.03(k)(21) of this Code.

(12) *Provision of mobile medical service.*

(i) A licensee providing mobile medical service shall—

(A) Obtain a letter signed by the management of each client for which services are rendered that permits the use of byproduct material at the client's address and clearly delineates the authority and responsibility of the licensee and the client;

(B) Check instruments used to measure the activity of unsealed byproduct material for proper function before medical use at each client's address or on each day of use, whichever is more frequent. At a minimum, the check for proper function required by this clause shall include a constancy check;

(C) Check survey instruments for proper operation with a dedicated check source before use at each client's address; and

(D) Before leaving a client's address, survey all areas of use to ensure compliance with the requirements in 175.03 of this Article.

(ii) A mobile medical service may not have byproduct material delivered from the manufacturer or the distributor to the client unless the client has a license allowing possession of the byproduct material. Byproduct material delivered to the client shall be received and handled in conformance with the client's license.

(iii) A licensee providing mobile medical services shall retain the letter required in clause (A) of subparagraph (i) of this paragraph and the record of each survey required in clause (D) of subparagraph (i) of this paragraph in accordance with §175.03(k)(20)(i) and (ii) of this Code, respectively.

(d) *Unsealed Byproduct Material--Written Directive Not Required.*

(1) *Use of unsealed byproduct material for uptake, dilution, and excretion studies for which a written directive is not required.* Except for quantities that require a written directive under §175.103(b)(6) of this Code, a licensee may use any unsealed byproduct material prepared for medical use for uptake, dilution, or excretion studies that is—

(i) Obtained from:

(A) A manufacturer or preparer licensed under 10 CFR §32.72 or equivalent Agreement State requirements; or

(B) A PET radioactive drug producer licensed under 10 CFR §30.32(j) or equivalent Agreement State requirements; or

(ii) Excluding production of PET radionuclides, prepared by:

(A) An authorized nuclear pharmacist;

(B) A physician who is an authorized user and who meets the requirements specified in §§175.103(j)(5), or 175.103(j)(6) of this Code; or

(C) An individual under the supervision, as specified in §175.103(b)(3) of this Code, of the authorized nuclear pharmacist in clause (A) of this subparagraph or the physician who is an authorized user in clause (B) of this subparagraph; or

(iii) Obtained from and prepared by an NRC or Agreement State licensee for use in research in accordance with a Radioactive Drug Research Committee-approved protocol or an Investigational New Drug (IND) protocol accepted by FDA; or

(iv) Prepared by the licensee for use in research in accordance with a Radioactive Drug Research Committee-approved application or an Investigational New Drug (IND) protocol accepted by FDA.

(2) *Use of unsealed byproduct material for imaging and localization studies for which a written directive is not required.* Except for quantities that require a written directive under §175.103(b)(6) of this Code, a licensee may use any unsealed byproduct material prepared for medical use for imaging and localization studies that is—

(i) Obtained from:

(A) A manufacturer or preparer licensed under 10 CFR §32.72 or equivalent Agreement State requirements; or

(B) A PET radioactive drug producer licensed under 10 CFR §30.32(j) or equivalent Agreement State requirements; or

(ii) Excluding production of PET radionuclides, prepared by:

(A) An authorized nuclear pharmacist;

(B) A physician who is an authorized user and who meets the requirements specified in §175.103(j)(5), or 175.103(j)(6) of this Code; or

(C) An individual under the supervision, as specified in §175.103(b)(3) of this Code, of the authorized nuclear pharmacist in clause (A) of this subparagraph or the physician who is an authorized user in clause (B) of this subparagraph;

(iii) Obtained from and prepared by an NRC or Agreement State licensee for use in research in accordance with a Radioactive Drug Research Committee-approved protocol or an Investigational New Drug (IND) protocol accepted by FDA; or

(iv) Prepared by the licensee for use in research in accordance with a Radioactive Drug Research Committee-approved application or an Investigational New Drug (IND) protocol accepted by FDA.

(v) A licensee may use generators upon approval of the Department.

(vi) Provided the conditions of §175.103(e)(3) of this Code are met, a licensee may use radioactive aerosols or gases only if specific application is made to and approved by the Department.

(3) *Permissible molybdenum-99, strontium-82, and strontium-85 concentrations.*

(i) A licensee may not administer to humans a radiopharmaceutical that contains:

(A) More than 0.15 kilobecquerel of molybdenum-99 per megabecquerel of technetium-99m (0.15 microcurie of molybdenum-99 per millicurie of technetium-99m); or

(B) More than 0.02 kilobecquerel of strontium-82 per megabecquerel of rubidium-82 chloride injection (0.02 microcurie of strontium-82 per millicurie of rubidium-82 chloride); or more than 0.2 kilobecquerel of strontium-85 per megabecquerel of rubidium-82 chloride injection (0.2 microcurie of strontium-85 per millicurie of rubidium-82).

(ii) A licensee that uses molybdenum-99/technetium-99m generators for preparing a technetium-99m radiopharmaceutical shall measure the molybdenum-99 concentration of the first

eluate after receipt of a generator to demonstrate compliance with subparagraph (i) of this paragraph.

(iii) A licensee that uses a strontium-82/rubidium-82 generator for preparing a rubidium-82 radiopharmaceutical shall, before the first patient use of the day, measure the concentration of radionuclides strontium-82 and strontium-85 to demonstrate compliance with subparagraph (i) of this paragraph.

(iv) If a licensee is required to measure the molybdenum-99 concentration or strontium-82 and strontium-85 concentrations, the licensee shall retain a record of each measurement in accordance with §175.03(k)(22) of this Code.

(v) A licensee shall report immediately to the Office of Radiological Health each occurrence of molybdenum-99 concentration exceeding the limits specified in §175.103(e)(3)(i)(A) of this Code.

(4) *Control of aerosols and gases.* (i) A licensee who administers radioactive aerosols or gases shall do so with a system that will keep airborne concentrations within the limits prescribed by §175.03 of this Code.

(ii) The system shall provide for collection and decay or disposal of the aerosol or gas in a shielded container.

(iii) Before receiving, producing, using, or storing a radioactive gas, the licensee shall calculate the amount of time needed after a release to reduce the concentration in the area of use to the ALI listed in Table 1 of Appendix A of §175.03 of this Code. The calculation shall be based on the highest activity of gas handled in a single container and the measured available air exhaust rate.

(iv) A licensee shall post the time calculated in §175.103(e)(3)(iii) of this Code at the area of use, as well as safety measures to be instituted in case of a spill at the area of use.

(v) A licensee shall check the operation of collection systems monthly and measure the ventilation rates in areas of use at intervals not to exceed 6 months. Records of these checks and measurements shall be maintained for 3 years.

(vi) A copy of the calculations, including assumptions, measurements and calculations made, required in §175.103(e)(3)(iii) of this Code shall be recorded and retained for the duration of the license.

(5) *Possession of survey instruments.* A licensee authorized to use unsealed byproduct material-written directive not required, shall have in its possession a portable, radiation detection survey instrument capable of detecting dose rates over the range of 1.0 mSv (0.1 mrem) per hour to 1000 mSv (100 mrem) per hour, and a portable radiation measurement survey instrument capable of measuring dose rates over the range 10 mSv (1 mrem) per hour to 10 mSv (1000 mrem) per hour. The instruments shall be operable and calibrated in accordance with §175.103(c)(2) of this Code.

(e) *Unsealed Byproduct Material—Written Directive Required.*

(1) *Use of unsealed byproduct material for which a written directive is required.*

(i) A licensee may use any unsealed byproduct material prepared for medical use and for which a written directive is required that is—

(A) Obtained from:

(a) A manufacturer or preparer licensed under 10 CFR §32.72 or equivalent Agreement State requirements; or

(b) A PET radioactive drug producer licensed under 10 CFR §30.32(j) or equivalent Agreement State requirements; or

(B) Excluding production of PET radionuclides, prepared by:

(a) An authorized nuclear pharmacist;

(b) A physician who is an authorized user and who meets the requirements specified in §§175.103(j)(5), 175.103(j)(6) of this Code, or

(c) An individual under the supervision, as specified in §175.103(b)(3) of this Code, of the authorized nuclear pharmacist in item (a) of this clause, or the physician who is an authorized user as indicated in item (b) of this clause; or

(C) Obtained from and prepared by an NRC or Agreement State licensee for use in research in accordance with an Investigational New Drug (IND) protocol accepted by FDA; or

(D) Prepared by the licensee for use in research in accordance with an Investigational New Drug (IND) protocol accepted by FDA.

(2) *Safety instruction.* In addition to the requirements of 10 CFR §19.12,

(i) A licensee shall provide oral and written radiation safety instruction, initially and at least annually, to personnel caring for patients or human research subjects who cannot be released under §175.103(c)(9) of this Code. To satisfy this requirement, the instruction shall be commensurate with the duties of the personnel and include—

(A) Patient or human research subject control;

(B) Visitor control, including—

(a) Routine visitation to hospitalized individuals in accordance with 10 CFR §20.1301(a)(1); and

(b) Visitation authorized in accordance with 10 CFR §20.1301(c);

(C) Contamination control;

(D) Waste control; and

(E) Notification of the Radiation Safety Officer, or his or her designee, and an authorized user if the patient or the human research subject has a medical emergency or dies.

(ii) A licensee shall retain a record of individuals receiving instruction in accordance with §175.03(k)(23) of this Code.

(3) *Safety precautions.*

(i) For each patient or human research subject who cannot be released under §175.103(c)(9) of this Code, a licensee shall—

(A) Quarter the patient or the human research subject either in—

(a) A private room with a private sanitary facility; or

(b) A room, with a private sanitary facility, with another individual who also has received therapy with unsealed byproduct material and who also cannot be released under §175.103(c)(9) of this Code;

(B) Visibly post the patient's or the human research subject's room with a "Radioactive Materials" sign.

(C) Note on the door or in the patient's or human research subject's chart where and how long visitors may stay in the patient's or the human research subject's room and authorize visits by individuals under age 18 only on a patient-by-patient basis with the approval of the authorized user after consultation with the radiation safety officer; and

(D) Either monitor material and items removed from the patient's or the human research subject's room to determine that their radioactivity cannot be distinguished from the natural background radiation level with a radiation detection survey instrument set on its most sensitive scale and with no interposed shielding, or handle the material and items as radioactive waste; and

(E) Promptly after administration of the dosage, measure the dose rates in contiguous restricted and unrestricted areas with a radiation measurement survey instrument to demonstrate compliance with the requirements of §175.03 of this Code and retain for 3 years a record of each survey that

includes the time and date of the survey, a plan of the area or list of points surveyed, the measured dose rate at several points expressed in mSv (mrem) per hour, the instrument used to make the survey, and the initials of the individual who made the survey.

(F) Survey the patient's room and private sanitary facility for removable contamination with a radiation detection survey instrument before assigning another patient to the room. The room shall not be reassigned until removable contamination is less than 5 Bq (300 disintegrations per minute) per 100 square centimeters.

(G) Measure the thyroid burden of each individual who helped prepare or administer a dosage of iodine-131 within 3 days after administering the dosage, and retain for the period required by §175.03(k) of this Code a record of each thyroid burden measurement, date of measurement, the name of the individual whose thyroid burden was measured, and the initials of the individual who made the measurements.

(ii) A licensee shall notify the Radiation Safety Officer, or his or her designee, and an authorized user as soon as possible if the patient or human research subject has a medical emergency or dies.

(4) *Possession of survey instruments.* A licensee authorized to use unsealed byproduct material for which a written directive is required shall have in its possession a portable radiation detection survey instrument capable of detecting dose rates over the range 1.0 mSv (0.1 mrem) per hour to 1000 mSv (100 mrem) per hour, and a portable radiation measurement survey instrument capable of measuring dose rates over the range 10 mSv (1 mrem) per hour to 10 mSv (1000 mrem) per hour. The instruments shall be operable and calibrated in accordance with §175.103(c)(2).

(f) *Manual Brachytherapy.*

(1) *Use of sources for manual brachytherapy.* A licensee shall use only brachytherapy sources for therapeutic medical uses:

(i) As approved in the Sealed Source and Device Registry; or

(ii) In research in accordance with an active Investigational Device Exemption (IDE) application accepted by the FDA provided the requirements of §175.103(b)(6)(i) of this Code are met.

(2) *Surveys after source implant and removal.*

(i) Immediately after implanting sources in a patient or a human research subject, the licensee shall make a survey to locate and account for all sources that have not been implanted.

(ii) Immediately after removing the last temporary implant source from a patient or a human research subject, the licensee shall make a survey of the patient or the human research subject with a radiation detection survey instrument to confirm that all sources have been removed.

(iii) A licensee shall retain a record of the surveys required by subparagraphs (i) and (ii) of this paragraph in accordance with §175.03(k)(24) of this Code.

(3) *Brachytherapy sources accountability.* (i) A licensee shall maintain accountability at all times for all brachytherapy sources in storage or use.

(ii) As soon as possible after removing sources from a patient or a human research subject, a licensee shall return brachytherapy sources to a secure storage area.

(iii) A licensee shall maintain a record of the brachytherapy source accountability in accordance with §175.03(k)(25) of this Code.

(4) *Safety instruction.* In addition to the requirements of 10 CFR §19.12, a licensee shall:

(i) provide oral and written radiation safety instruction, initially and at least annually, to all personnel caring for patients or human research subjects who are receiving brachytherapy and

cannot be released under §175.103(c)(9) of this Code. To satisfy this requirement, the instruction shall be commensurate with the duties of the personnel and include the—

(A) Size and appearance of the brachytherapy sources;

(B) Safe handling and shielding instructions;

(C) Procedures for patient or human research subject control;

(D) Procedures for visitor control, including both:

(a) Routine visitation of hospitalized individuals in accordance with 10 CFR §20.1301(a)(1); and

(b) Visitation authorized in accordance with 10 CFR §20.1301(c); and

(E) Procedures for notification of the Radiation Safety Officer, or his or her designee, and an authorized user if the patient or the human research subject has a medical emergency or dies.

(ii) A licensee shall retain a record of individuals receiving instruction in accordance with §175.03(k)(23) of this Code.

(5) *Safety precautions.*

(i) For each patient or human research subject who is receiving brachytherapy and cannot be released under §175.103(c)(9) of this Code, a licensee shall—

(A) Not quarter the patient or the human research subject in the same room as an individual who is not receiving brachytherapy;

(B) Visibly post the patient's or human research subject's room with a "Radioactive Materials" sign; and

(C) Note on the door or in the patient's or human research subject's chart where and how long visitors may stay in the patient's or human research subject's room, and authorize visits by individuals under age 18 only on a case-by-case basis with the approval of the authorized user after consultation with the radiation safety officer.

(D) Promptly after implanting the sources, survey the dose rates in contiguous restricted and unrestricted areas with a radiation measurement survey instrument to demonstrate compliance with §175.03 of this Code and retain for 3 years a record of each survey that includes the time and date of the survey, a sketch of the area or list of points surveyed, the measured dose rate at several points expressed in mSv (mrem) per hour, the instrument used to make the survey, and the initials of the individual who made the survey; and

(E) Provide the patient with radiation safety guidance that will help to keep the radiation dose to household members and the public as low as reasonably achievable before releasing the patient if the patient was administered a permanent implant.

(ii) A licensee shall have applicable emergency response equipment available near each treatment room to respond to a source—

(A) Dislodged from the patient; and

(B) Lodged within the patient following removal of the source applicators.

(iii) A licensee shall notify the Radiation Safety Officer, or his or her designee, and an authorized user as soon as possible if the patient or human research subject has a medical emergency or dies.

(6) *Possession of survey instruments.* A licensee authorized to use sources for manual brachytherapy shall have in its possession a portable radiation detection survey instrument capable of detecting dose rates over the range 1.0 mSv (0.1 mrem) per hour to 1000 mSv (100 mrem) per hour, and a portable radiation measurement survey instrument capable of measuring dose rates over the range 10 mSv (1 mrem) per hour to 10 mSv (1000 mrem) per hour. The instruments shall be operable and calibrated in accordance with §175.103(c)(2).

(7) *Calibration measurements of brachytherapy sources.*

(i) Before the first medical use of a brachytherapy source on or after October 24, 2002, a licensee shall have—

(A) Determined the source output or activity using a dosimetry system that meets the requirements of §175.103(h)(8)(i) of this Code;

(B) Determined source positioning accuracy within applicators; and

(C) Used published protocols currently accepted by nationally recognized bodies to meet the requirements of clauses (A) and (B) of this subparagraph.

(ii) Instead of a licensee making its own measurements as required in subparagraph (i) of this paragraph, the licensee may use measurements provided by the source manufacturer or by a calibration laboratory accredited by the American Association of Physicists in Medicine that are made in accordance with subparagraph (i) of this paragraph.

(iii) A licensee shall mathematically correct the outputs or activities determined in subparagraph (i) of this paragraph for physical decay at intervals consistent with 1 percent physical decay.

(iv) A licensee shall retain a record of each calibration in accordance with §175.03(k)(26) of this Code.

(8) *Decay of strontium-90 sources for ophthalmic treatments.*

(i) Only an authorized medical physicist shall calculate the activity of each strontium-90 source that is used to determine the treatment times for ophthalmic treatments. The decay shall be based on the activity determined under §175.103(f)(7) of this Code..

(ii) A licensee shall retain a record of the activity of each strontium-90 source in accordance with §175.03(k)(27) of this Code.

(9) *Therapy-related computer systems.*

The licensee shall perform acceptance testing on the treatment planning system of therapy-related computer systems in accordance with published protocols accepted by nationally recognized bodies. At a minimum, the acceptance testing shall include, as applicable, verification of:

(i) The source-specific input parameters required by the dose calculation algorithm;

(ii) The accuracy of dose, dwell time, and treatment time calculations at representative points;

(iii) The accuracy of isodose plots and graphic displays; and

(iv) The accuracy of the software used to determine sealed source positions from radiographic images.

(g) *Sealed sources for diagnosis.*

(1) *Use of sealed sources for diagnosis.* A licensee shall use only sealed sources for diagnostic medical uses as approved in the Sealed Source and Device Registry.

(2) *Availability of survey instrument.* A licensee authorized to use sealed sources for diagnosis shall have available for use a portable radiation detection survey instrument capable of detecting dose rates over the range 1.0 mSv (0.1 mrem) per hour to 1000 mSv (100 mrem) per hour or a portable radiation measurement survey instrument capable of measuring dose rates over the range 10 mSv (1 mrem) per hour to 10 mSv (1000 mrem) per hour. The instrument shall be operable and calibrated in accordance with §175.103(c)(2) of this Code..

(h) *Photon Emitting Remote Afterloader Units, Teletherapy Units, and Gamma Stereotactic Radiosurgery Units.*

(1) *Use of a sealed source in a remote afterloader unit, teletherapy unit, or gamma stereotactic radiosurgery unit.* A licensee shall use sealed sources in photon emitting remote afterloader units, teletherapy units, or gamma stereotactic radiosurgery units for therapeutic medical uses:

(i) As approved in the Sealed Source and Device Registry; or

(ii) In research in accordance with an active Investigational Device Exemption (IDE) application accepted by the FDA, provided the requirements of §175.103(b)(6)(i) of this Code. are met.

(2) *Surveys of patients and human research subjects treated with a remote afterloader unit.*

(i) Immediately after removing the last temporary implant source from a patient or a human research subject, a licensee shall survey the patient or the human research subject and the remote afterloader unit with a portable radiation detection survey instrument to confirm that the source(s) has been removed from the patient or human research subject and returned to the safe shielded position. The licensee shall not release from confinement for medical care a patient or a human research subject treated by temporary implant until all sources have been removed.

(ii) A licensee shall retain a record of these surveys in accordance with §175.03(k)(24) of this Code.

(3) *Installation, maintenance, adjustment, and repair.*

(i) Only a person specifically licensed by the Commission or an Agreement State shall install, maintain, adjust, or repair a remote afterloader unit, teletherapy unit, or gamma stereotactic radiosurgery unit that involves work on the source(s) shielding, the source(s) driving unit, or other electronic or mechanical component that could expose the source(s), reduce the shielding around the source(s), or compromise the radiation safety of the unit or the source(s).

(ii) Except for low dose-rate remote afterloader units, only a person specifically licensed by the Commission or an Agreement State shall install, replace, relocate, or remove a sealed source or source contained in other remote afterloader units, teletherapy units, or gamma stereotactic radiosurgery units.

(iii) For a low dose-rate remote afterloader unit, only a person specifically licensed by the Commission or an Agreement State or an authorized medical physicist shall install, replace, relocate, or remove a sealed source(s) contained in the unit.

(iv) A licensee shall retain a record of the installation, maintenance, adjustment, and repair of remote afterloader units, teletherapy units, and gamma stereotactic radiosurgery units in accordance with §175.03(k)(28) of this Code.

(4) *Amendments.* In addition to the requirements specified in §175.103(a)(5) of this Code, a licensee shall apply for and shall have received a license amendment before:

(i) making any change in the treatment room shielding;

(ii) making any change in the location of the teletherapy unit within the treatment room;

(iii) using the teletherapy unit in a manner that could result in increased radiation levels in areas outside the teletherapy treatment room;

(iv) relocating the teletherapy unit; or

(v) allowing an individual not listed on the licensee's license to perform the duties of the authorized medical physicist.

(5) *Safety procedures and instructions for remote afterloader units, teletherapy units, and gamma stereotactic radiosurgery units.*

(i) A licensee shall—

(A) Secure the unit, the console, the console keys, and the treatment room when not in use or unattended;

(B) Permit only individuals approved by the authorized user, Radiation Safety Officer, or authorized medical physicist to be present in the treatment room during treatment with the source(s);

(C) Prevent dual operation of more than one radiation producing device in a treatment room if applicable; and

(D) Develop, implement, and maintain written procedures for ensuring that only approved individuals are present in the treatment room during treatment with the source(s); for responding to an abnormal situation when the operator is unable to place the source(s) in the shielded position; or removing the patient or human research subject from the radiation field with controls from outside the treatment room. These procedures shall include—

(a) Instructions for responding to equipment failures and the names of the individuals responsible for implementing corrective actions;

(b) The process for restricting access to and posting of the treatment area to minimize the risk of inadvertent exposure; and

(c) The names and telephone numbers of the authorized users, the authorized medical physicist, and the Radiation Safety Officer to be contacted if the unit or console operates abnormally.

(ii) A copy of the procedures required by clause (D) of subparagraph (i) of this paragraph shall be physically located at the unit console.

(iii) A licensee shall post instructions at the unit console to inform the operator of—

(A) The location of the procedures required by clause (D) of subparagraph (i) of this paragraph; and

(B) The names and telephone numbers of the authorized users, the authorized medical physicist, and the Radiation Safety Officer to be contacted if the unit or console operates abnormally.

(iv) A licensee shall provide instruction, initially and at least annually, to all individuals who operate the unit, as appropriate to the individual's assigned duties, in—

(A) The procedures identified in subparagraph (i) of this paragraph; and

(B) The operating procedures for the unit.

(v) A licensee shall ensure that operators, authorized medical physicists, and authorized users participate in drills of the emergency procedures, initially and at least annually.

(vi) A licensee shall retain a record of individuals receiving instruction required by subparagraph (iv) of this paragraph, in accordance with §175.03(k)(23) of this Code.

(vii) A licensee shall retain a copy of the procedures required by §§175.103(h)(5)(i)(D) and 175.103(h)(5)(iv)(B) in accordance with §175.03(k)(29) of this Code.

(6) *Safety precautions for remote afterloader units, teletherapy units, and gamma stereotactic radiosurgery units.*

(i) A licensee shall control access to the treatment room by a door at each entrance.

(ii) A licensee shall equip each entrance to the treatment room with an electrical interlock system that will—

(A) Prevent the operator from initiating the treatment cycle unless each treatment room entrance door is closed;

(B) Cause the source(s) to be shielded when an entrance door is opened; and

(C) Prevent the source(s) from being exposed following an interlock interruption until all treatment room entrance doors are closed and the source(s) on-off control is reset at the console.

(iii) A licensee shall equip each entrance to the teletherapy room with a beam condition indicator light.

(iv) A licensee shall have in each teletherapy room a permanent radiation monitor capable of continuously monitoring beam status.

(A) Each radiation monitor shall be capable of providing visible notice of a teletherapy unit malfunction that results in an exposed or partially exposed source. The visible indicator of high radiation levels shall be observable by an individual entering the teletherapy room.

(B) A licensee shall require any individual entering the treatment room to assure, through the use of the radiation monitors, that radiation levels have returned to ambient levels.

(C) Each radiation monitor shall be equipped with a backup power supply separate from the power supply to the teletherapy unit. This backup power supply may be a battery system.

(D) A radiation monitor shall be checked with a dedicated check source for proper operation each day before the teletherapy unit is used for treatment of patients.

(E) A licensee shall maintain a record of the check required by §175.103(i)(7)(iv) of this Code for 3 years. The record shall include the date of the check, notation that the monitor indicates when the source is exposed, and the initials of the individual who performed the check.

(F) If a radiation monitor is inoperable, the licensee shall require any individual entering the teletherapy room to use a survey instrument or audible alarm personal dosimeter to monitor for any malfunction of the source exposure mechanism that may result in an exposed or partially exposed source. The instrument or dosimeter shall be checked with a dedicated check source for proper operation at the beginning of each day of use. The licensee shall keep a record as described in §175.103(i)(7)(v) of this Code.

(G) A licensee shall promptly repair or replace the radiation monitor if it is inoperable.

(v) Except for low-dose remote afterloader units, a licensee shall construct or equip each treatment room with viewing and intercom systems to permit continuous observation of the patient or the human research subject from the treatment console during irradiation.

(vi) For licensed activities where sources are placed within the patient's or human research subject's body, a licensee shall only conduct treatments which allow for expeditious removal of a decoupled or jammed source.

(vii) In addition to the requirements specified in subparagraphs (i) through (vi) of this paragraph, a licensee shall—

(A) For medium dose-rate and pulsed dose-rate remote afterloader units, require—

(a) An authorized medical physicist and either an authorized user or a physician, under the supervision of an authorized user, who has been trained in the operation and emergency response for the unit to be physically present during the initiation of all patient treatments involving the unit; and

(b) An authorized medical physicist and either an authorized user or an individual, under the supervision of an authorized user, who has been trained to remove the source applicator(s) in the event of an emergency involving the unit, to be immediately available during continuation of all patient treatments involving the unit.

(B) For high dose-rate remote afterloader units, require—

(a) An authorized user and an authorized medical physicist to be physically present during the initiation of all patient treatments involving the unit; and

(b) An authorized medical physicist and either an authorized user or a physician, under the supervision of an authorized user, who has been trained in the operation and emergency response for the unit, to be physically present during continuation of all patient treatments involving the unit.

(C) For gamma stereotactic radiosurgery units, require an authorized user and an authorized medical physicist to be physically present throughout all patient treatments involving the unit.

(D) Notify the Radiation Safety Officer, or his/her designee, and an authorized user as soon as possible if the patient or human research subject has a medical emergency or dies.

(viii) A licensee shall have applicable emergency response equipment available near each treatment room to respond to a source—

(A) Remaining in the unshielded position; or

(B) Lodged within the patient following completion of the treatment.

(7) *Possession of survey instruments.* A licensee authorized to use a sealed source in a remote afterloader unit, teletherapy unit, or gamma stereotactic radiosurgery unit shall have in its possession a portable radiation detection survey instrument capable of detecting rates over the range 1.0 mSv (0.1 mrem) per hour to 1000 mSv (100 mrem) per hour, and a portable radiation measurement survey instrument capable of measuring dose rates over the range 10 mSv (1 mrem) per hour to 10 mSv (1000 mrem) per hour. The instruments shall be operable and calibrated in accordance with §175.103(c)(2) of this Code.

(8) *Dosimetry equipment.*

(i) Except for low dose-rate remote afterloader sources where the source output or activity is determined by the manufacturer, a licensee shall have a calibrated dosimetry system available for use. To satisfy this requirement, one of the following two conditions shall be met.

(A) The system shall have been calibrated using a system or source traceable to the National Institute of Standards and Technology (NIST) and published protocols accepted by nationally recognized bodies; or by a calibration laboratory accredited by the American Association of Physicists in Medicine (AAPM). The calibration shall have been performed within the previous 2 years and after any servicing that may have affected system calibration; or

(B) The system shall have been calibrated within the previous 4 years. Eighteen to thirty months after that calibration, the system shall have been intercompared with another dosimetry system that was calibrated within the past 24 months by NIST or by a calibration laboratory accredited by the AAPM. The results of the intercomparison shall indicate that the calibration factor of the licensee's system had not changed by more than 2 percent. The licensee may not use the intercomparison result to change the calibration factor. When intercomparing dosimetry systems to be used for calibrating sealed sources for therapeutic units, the licensee shall use a comparable unit with beam attenuators or collimators, as applicable, and sources of the same radionuclide as the source used at the licensee's facility.

(ii) The licensee shall have a dosimetry system available for use for spot-check output measurements, if applicable. To satisfy this requirement, the system may be compared with a system that has been calibrated in accordance with subparagraph (i) of this paragraph. This comparison shall have been performed within the previous year and after each servicing that may have affected system calibration. The spot-check system may be the same system used to meet the requirement in subparagraph (i) of this paragraph.

(iii) The licensee shall retain a record of each calibration, intercomparison, and comparison in accordance with §175.03(k)(30) of this Code.

(9) *Full calibration measurements on teletherapy units.*

(i) A licensee authorized to use a teletherapy unit for medical use shall perform full calibration measurements on each teletherapy unit—

(A) Before the first medical use of the unit; and

(B) Before medical use under the following conditions:

(a) Whenever spot-check measurements indicate that the output differs by more than 5 percent from the output obtained at the last full calibration corrected mathematically for radioactive decay;

(b) Following replacement of the source or following reinstallation of the teletherapy unit in a new location;

(c) Following any repair of the teletherapy unit that includes removal of the source or major repair of the components associated with the source exposure assembly; and

(C) At intervals not exceeding 1 year.

(ii) To satisfy the requirement of subparagraph (i) of this paragraph, full calibration measurements shall include determination of—

(A) The output within /- 3 percent for the range of field sizes and for the distance or range of distances used for medical use;

(B) The coincidence of the radiation field and the field indicated by the light beam localizing device;

(C) The uniformity of the radiation field and its dependence on the orientation of the useful beam;

(D) Timer accuracy and linearity over the range of use;

(E) On-off error; and

(F) The accuracy of all distance measuring and localization devices in medical use.

(iii) A licensee shall use the dosimetry system described in §175.103(h)(8)(i) of this Code to measure the output for one set of exposure conditions. The remaining radiation measurements required in subparagraph (ii) of this paragraph may be made using a dosimetry system that indicates relative dose rates.

(iv) A licensee shall make full calibration measurements required by subparagraph (i) of this paragraph in accordance with published protocols accepted by nationally recognized bodies.

(v) A licensee shall mathematically correct the outputs determined in clause (A) of subparagraph (ii) of this paragraph for physical decay for intervals not exceeding 1 month for cobalt-60, 6 months for cesium-137, or at intervals consistent with 1 percent decay for all other nuclides.

(vi) Full calibration measurements required by subparagraph (i) of this paragraph and physical decay corrections required by subparagraph (v) of this paragraph shall be performed by the authorized medical physicist named on the license.

(vii) A licensee shall retain a record of each calibration in accordance with §175.03(k)(31) of this Code.

(10) *Full calibration measurements on remote afterloader units.*

(i) A licensee authorized to use a remote afterloader unit for medical use shall perform full calibration measurements on each unit—

(A) Before the first medical use of the unit;

(B) Before medical use under the following conditions:

(a) Following replacement of the source or following reinstallation of the unit in a new location outside the facility; and

(b) Following any repair of the unit that includes removal of the source or major repair of the components associated with the source exposure assembly; and

(C) At intervals not exceeding 1 quarter for high dose-rate, medium dose-rate, and pulsed dose-rate remote afterloader units with sources whose half-life exceeds 75 days; and

(D) At intervals not exceeding 1 year for low dose-rate remote afterloader units.

(ii) To satisfy the requirement of subparagraph (i) of this paragraph, full calibration measurements shall include, as applicable, determination of:

(A) The output within ±5 percent;

(B) Source positioning accuracy to within ±1 millimeter;

(C) Source retraction with backup battery upon power failure;

(D) Length of the source transfer tubes;

(E) Timer accuracy and linearity over the typical range of use;

(F) Length of the applicators; and

(G) Function of the source transfer tubes, applicators, and transfer tube-applicator interfaces.

(iii) A licensee shall use the dosimetry system described in §175.103(h)(8)(i) of this Code to measure the output.

(iv) A licensee shall make full calibration measurements required by subparagraph (i) of this paragraph in accordance with published protocols accepted by nationally recognized bodies.

(v) In addition to the requirements for full calibrations for low dose-rate remote afterloader units in subparagraph,(ii) of this paragraph, a licensee shall perform an autoradiograph of the source(s) to verify inventory and source(s) arrangement at intervals not exceeding 1 quarter.

(vi) For low dose-rate remote afterloader units, a licensee may use measurements provided by the source manufacturer that are made in accordance with subparagraphs (i) through (v) of this paragraph.

(vii) A licensee shall mathematically correct the outputs determined in clause (A) of subparagraph (ii) of this paragraph for physical decay at intervals consistent with 1 percent physical decay.

(viii) Full calibration measurements required by subparagraph (i) of this paragraph and physical decay corrections required by subparagraph (vii) of this paragraph shall be performed by the authorized medical physicist.

(ix) A licensee shall retain a record of each calibration in accordance with §175.03(k)(31) of this Code.

(11) *Full calibration measurements on gamma stereotactic radiosurgery units.*

(i) A licensee authorized to use a gamma stereotactic radiosurgery unit for medical use shall perform full calibration measurements on each unit—

(A) Before the first medical use of the unit;

(B) Before medical use under the following conditions—

(a) Whenever spot-check measurements indicate that the output differs by more than 5 percent from the output obtained at the last full calibration corrected mathematically for radioactive decay;

(b) Following replacement of the sources or following reinstallation of the gamma stereotactic radiosurgery unit in a new location; and

(c) Following any repair of the gamma stereotactic radiosurgery unit that includes removal of the sources or major repair of the components associated with the source assembly; and

(C) At intervals not exceeding 1 year, with the exception that relative helmet factors need only be determined before the first medical use of a helmet and following any damage to a helmet.

(ii) To satisfy the requirement of subparagraph (i) of this paragraph, full calibration measurements shall include determination of—

(A) The output within ±3 percent;

(B) Relative helmet factors;

(C) Isocenter coincidence;

(D) Timer accuracy and linearity over the range of use;

(E) On-off error;

(F) Trunnion centricity;

(G) Treatment table retraction mechanism, using backup battery power or hydraulic backups with the unit off;

(H) Helmet microswitches;

(I) Emergency timing circuits; and

(J) Stereotactic frames and localizing devices (trunnions).

(iii) A licensee shall use the dosimetry system described in §175.103(h)(8)(i) of this Code to measure the output for one set of exposure conditions. The remaining radiation measurements required in clause (A) of subparagraph (ii) of this paragraph may be made using a dosimetry system that indicates relative dose rates.

(iv) A licensee shall make full calibration measurements required by subparagraph (i) of this paragraph in accordance with published protocols accepted by nationally recognized bodies.

(v) A licensee shall mathematically correct the outputs determined in clause (A) of subparagraph (ii) of this paragraph at intervals not exceeding 1 month for cobalt-60 and at intervals consistent with 1 percent physical decay for all other radionuclides.

(vi) Full calibration measurements required by subparagraph (i) of this paragraph and physical decay corrections required by subparagraph (v) of this paragraph shall be performed by the authorized medical physicist.

(vii) A licensee shall retain a record of each calibration in accordance with §175.03(k)(31) of this Code.

(12) *Periodic spot-checks for teletherapy units.*

(i) A licensee authorized to use teletherapy units for medical use shall perform output spot-checks on each teletherapy unit once in each calendar month and after making any change for which an amendment is required by §175.103(i)(3) that include determination of—

(A) Timer accuracy, and timer linearity over the range of use;

(B) On-off error;

(C) The coincidence of the radiation field and the field indicated by the light beam localizing device;

(D) The accuracy of all distance measuring and localization devices used for medical use;

(E) The output for one typical set of operating conditions measured with the dosimetry system described in §175.103(h)(8)(ii) of this Code; and

(F) The difference between the measurement made in clause (E) of this subparagraph and the anticipated output, expressed as a percentage of the anticipated output (i.e., the value obtained at last full calibration corrected mathematically for physical decay).

(ii) A licensee shall use the dosimetry system described in §175.103(i)(9) to measurements required in §175.103(i)(11)(ii)(E) of this Code.

(iii) A licensee shall perform measurements required by subparagraph (i) of this paragraph in accordance with written procedures established by the authorized medical physicist. That individual need not actually perform the spot-check measurements.

(iv) A licensee shall have the authorized medical physicist review the results of each spot-check within 15 days. The authorized medical physicist shall notify the licensee as soon as possible in writing of the results of each spot-check. The licensee shall retain a copy of each such notification for three years.

(v) A licensee authorized to use a teletherapy unit for medical use shall perform safety spot-checks of each teletherapy facility once in each calendar month and after each source installation to assure proper operation of—

(A) Electrical interlocks at each teletherapy room entrance;

(B) Electrical or mechanical stops installed for the purpose of limiting use of the primary beam of radiation (restriction of source housing angulation or elevation, carriage or stand travel and operation of the beam on-off mechanism);

(C) Source exposure indicator lights on the teletherapy unit, on the control console, and in the facility;

(D) Viewing and intercom systems;

(E) Treatment room doors from inside and outside the treatment room; and

(F) Electrically assisted treatment room doors with the teletherapy unit electrical power turned off.

(vi) If the results of the checks required in subparagraph (iv) of this paragraph indicate the malfunction of any system, a licensee shall lock the control console in the off position and not use the unit except as may be necessary to repair, replace, or check the malfunctioning system.

(vii) A licensee shall retain a record of each spot-check required by subparagraphs (i) and (iv) of this paragraph, and a copy of the procedures required by subparagraph (ii), in accordance with §175.03(k)(32) of this Code.

(13) *Periodic spot-checks for remote afterloader units.*

(i) A licensee authorized to use a remote afterloader unit for medical use shall perform spot-checks of each remote afterloader facility and on each unit—

(A) Before the first use of a high dose-rate, medium dose-rate, or pulsed dose-rate remote afterloader unit on a given day;

(B) Before each patient treatment with a low dose-rate remote afterloader unit; and

(C) After each source installation.

(ii) A licensee shall perform the measurements required by subparagraph (i) of this paragraph in accordance with written procedures established by the authorized medical physicist. That individual need not actually perform the spot check measurements.

(iii) A licensee shall have the authorized medical physicist review the results of each spot-check within 15 days. The authorized medical physicist shall notify the licensee as soon as possible in writing of the results of each spot-check.

(iv) To satisfy the requirements of subparagraph (i) of this paragraph, spot-checks shall, at a minimum, assure proper operation of—

(A) Electrical interlocks at each remote afterloader unit room entrance;

(B) Source exposure indicator lights on the remote afterloader unit, on the control console, and in the facility;

(C) Viewing and intercom systems in each high dose-rate, medium dose-rate, and pulsed dose-rate remote afterloader facility;

(D) Emergency response equipment;

(E) Radiation monitors used to indicate the source position;

(F) Timer accuracy;

(G) Clock (date and time) in the unit's computer; and

(H) Decayed source(s) activity in the unit's computer.

(v) If the results of the checks required in subparagraph (iv) of this paragraph indicate the malfunction of any system, a licensee shall lock the control console in the off position and not use the unit except as may be necessary to repair, replace, or check the malfunctioning system.

(vi) A licensee shall retain a record of each check required by subparagraph (iv) of this paragraph and a copy of the procedures required by subparagraph (ii) of this paragraph in accordance with §175.03(k)(33) of this Code.

(14) *Periodic spot-checks for gamma stereotactic radiosurgery units.*

(i) A licensee authorized to use a gamma stereotactic radiosurgery unit for medical use shall perform spot-checks of each gamma stereotactic radiosurgery facility and on each unit—

(A) Monthly;

(B) Before the first use of the unit on a given day; and

(C) After each source installation.

(ii) A licensee shall—

(A) Perform the measurements required by subparagraph (i) of this paragraph in accordance with written procedures established by the authorized medical physicist. That individual need not actually perform the spot check measurements.

(B) Have the authorized medical physicist review the results of each spot-check within 15 days. The authorized medical physicist shall notify the licensee as soon as possible in writing of the results of each spot-check.

(iii) To satisfy the requirements of subparagraph (i) of this paragraph, spot-checks shall, at a minimum—

(A) Assure proper operation of—

(a) Treatment table retraction mechanism, using backup battery power or hydraulic backups with the unit off;

(b) Helmet microswitches;

(c) Emergency timing circuits; and

(d) Stereotactic frames and localizing devices (trunnions).

(B) Determine—

(a) The output for one typical set of operating conditions measured with the dosimetry system described in §175.103(h)(8)(ii) of this Code;

(b) The difference between the measurement made in item (a) of this clause (B) and the anticipated output, expressed as a percentage of the anticipated output (i.e., the value obtained at last full calibration corrected mathematically for physical decay);

(c) Source output against computer calculation;

(d) Timer accuracy and linearity over the range of use;

(e) On-off error; and

(f) Trunnion centricity.

(iv) To satisfy the requirements of clauses (B) and (C) of subparagraph (i) of this paragraph, spot-checks shall assure proper operation of—

(A) Electrical interlocks at each gamma stereotactic radiosurgery room entrance;

(B) Source exposure indicator lights on the gamma stereotactic radiosurgery unit, on the control console, and in the facility;

(C) Viewing and intercom systems;

(D) Timer termination;

(E) Radiation monitors used to indicate room exposures; and

(F) Emergency off buttons.

(v) A licensee shall arrange for the repair of any system identified in subparagraph (iii) of this paragraph that is not operating properly as soon as possible.

(vi) If the results of the checks required in subparagraph (iv) of this paragraph indicate the malfunction of any system, a licensee shall lock the control console in the off position and not use the unit except as may be necessary to repair, replace, or check the malfunctioning system.

(vii) A licensee shall retain a record of each check required by subparagraphs (iii) and (iv) and a copy of the procedures required by subparagraph (ii) of this paragraph in accordance with §175.03(k)(34) of this Code.

(15) *Additional technical requirements for mobile remote afterloader units.*

(i) A licensee providing mobile remote afterloader service shall—

(A) Check survey instruments before medical use at each address of use or on each day of use, whichever is more frequent; and

(B) Account for all sources before departure from a client's address of use.

(ii) In addition to the periodic spot-checks required by §175.103(h)(13) of this Code, a licensee authorized to use mobile afterloaders for medical use shall perform checks on each remote afterloader unit before use at each address of use. At a minimum, checks shall be made to verify the operation of—

(A) Electrical interlocks on treatment area access points;

(B) Source exposure indicator lights on the remote afterloader unit, on the control console, and in the facility;

(C) Viewing and intercom systems;

(D) Applicators, source transfer tubes, and transfer tube-applicator interfaces;

(E) Radiation monitors used to indicate room exposures;

(F) Source positioning (accuracy); and

(G) Radiation monitors used to indicate whether the source has returned to a safe shielded position.

(iii) In addition to the requirements for checks in subparagraph (ii) of this paragraph, a licensee shall ensure overall proper operation of the remote afterloader unit by conducting a simulated cycle of treatment before use at each address of use.

(iv) If the results of the checks required in subparagraph (ii) of this paragraph indicate the malfunction of any system, a licensee shall lock the control console in the off position and not use the unit except as may be necessary to repair, replace, or check the malfunctioning system.

(v) A licensee shall retain a record of each check required by subparagraph (ii) of this paragraph in accordance with §175.03(k)(35) of this Code.

(16) *Radiation surveys.*

(i) In addition to the survey requirement in §175.03 of this Code, a person licensed under this section shall make surveys to ensure that:

(A) the maximum and average radiation levels at 1 meter from the teletherapy source with the source in the off position and the collimators set for a normal treatment field do not exceed 100 mSv (10 mrem) per hour and 20 mSv (2 mrem) per hour, respectively; and

(B) with the teletherapy source in the on position with the largest clinically available treatment field and with a scattering phantom in the primary beam of radiation, that:

(a) radiation levels in restricted areas are not likely to cause personnel exposures in excess of the limits specified in §175.03 of this Code; and

(b) radiation levels in unrestricted areas do not exceed the limits specified in §175.03 of this Code.

(ii) If the results of the surveys required in §175.103(h)(16)(i) of this Code indicate any radiation levels in excess of the respective limit specified in §175.103(h)(16)(i)(A) or (B), the licensee shall lock the control in the "off" position and not use the unit:

(A) except as may be necessary to repair, replace, or test the teletherapy unit, the teletherapy unit shielding or the treatment room shielding; or

(B) until the licensee has received a specific exemption from the Department.

(iii) The licensee shall make the survey required by subparagraph (i) of this paragraph at installation of a new source and following repairs to the source(s) shielding, the source(s) driving unit, or other electronic or mechanical component that could expose the source, reduce the shielding around the source(s), or compromise the radiation safety of the unit or the source(s).

(iv) A licensee shall retain a record of the radiation surveys required by subparagraph (i) of this paragraph in accordance with §175.03(k)(36) of this Code.

(17) *Reports of teletherapy and gamma stereotactic radiosurgery surveys, checks, tests, and measurements.* A licensee shall furnish a copy of the records required in §175.103(h)(9) and (11) of this Code and the output from the teletherapy source expressed as Sv (rem) per hour at one meter from the source determined during the surveys required in §175.103(h)(16) of this Code to the Office of Radiological Health within 30 days following completion of the action that initiated the record requirement.

(18) *Modification of a teletherapy unit or room before beginning a treatment program.* If the survey required by §175.103(h)(16) of this Code indicates that an individual in an unrestricted area may be exposed to levels of radiation greater than those permitted by §175.03 of this Code, before beginning the treatment program, the licensee shall:

(i) either equip the unit with stops or add additional radiation shielding to ensure compliance with §175.03 of this Code;

(ii) perform the survey required by §175.103(h)(16) of this Code again; and

(iii) include in the report required by §175.103(h)(17) of this Code the results of the initial survey, a description of the modification made to comply with §175.103(h)(16)(i) of this Code and the results of the second survey; or

(iv) request and receive a license amendment that authorizes radiation levels in unrestricted areas greater than those permitted by §175.03 of this Code.

(19) *Five-year inspection for teletherapy and gamma stereotactic radiosurgery units.*

(i) A licensee shall have each teletherapy unit and gamma stereotactic radiosurgery unit fully inspected and serviced during source replacement or at intervals not to exceed 5 years, whichever comes first, to assure proper functioning of the source exposure mechanism.

(ii) This inspection and servicing may only be performed by persons specifically licensed to do so by the Commission or an Agreement State.

(iii) A licensee shall keep a record of the inspection and servicing in accordance with §175.03(k)(37) of this Code.

(20) *Therapy-related computer systems.*

The licensee shall perform acceptance testing on the treatment planning system of therapy-related computer systems in accordance with published protocols accepted by nationally recognized bodies. At a minimum, the acceptance testing shall include, as applicable, verification of:

(i) The source-specific input parameters required by the dose calculation algorithm;

(ii) The accuracy of dose, dwell time, and treatment time calculations at representative points;

(iii) The accuracy of isodose plots and graphic displays;

(iv) The accuracy of the software used to determine sealed source positions from radiographic images; and

(v) The accuracy of electronic transfer of the treatment delivery parameters to the treatment delivery unit from the treatment planning system.

(i) *Other Medical Uses of Byproduct Material or Radiation From Byproduct Material.* A licensee may use byproduct material or a radiation source approved for medical use which is not specifically addressed in §175.103(d) through (h) of this Code if—

(1) The applicant or licensee has submitted the information required by §175.103(a)(6)(ii) through (iv) of this Code; and

(2) The applicant or licensee has received written approval from the Commission in a license or license amendment and uses the material in accordance with the regulations and specific conditions the Commission considers necessary for the medical use of the material.

(j) *Training and experience requirements.*

(1) *Radiation safety officer.* Except as provided in §175.103(j)(14) of this Code, the licensee shall require an individual fulfilling the responsibilities of the Radiation Safety Officer as provided in §175.103(b)(2) of this Code to be an individual who—

(i) Is certified by a specialty board whose certification process has been recognized by the Commission or an Agreement State and who meets the requirements in subparagraphs (iii) and (iv) of this paragraph. (The names of board certifications which have been recognized by the Commission or an Agreement State will be posted on the NRC's Web page.) To have its certification process recognized, a specialty board shall require all candidates for certification to:

(A)*(a)* Hold a bachelor's or graduate degree from an accredited college or university in physical science or engineering or biological science with a minimum of 20 college credits in physical science;

(b) Have 5 or more years of professional experience in health physics (graduate training may be substituted for no more than 2 years of the required experience) including at least 3 years in applied health physics; and

(c) Pass an examination administered by diplomates of the specialty board, which evaluates knowledge and competence in radiation physics and instrumentation, radiation protection, mathematics pertaining to the use and measurement of radioactivity, radiation biology, and radiation dosimetry; or

(B)*(a)* Hold a master's or doctor's degree in physics, medical physics, other physical science, engineering, or applied mathematics from an accredited college or university;

(b) Have 2 years of full-time practical training and/or supervised experience in medical physics—

(I) Under the supervision of a medical physicist who is certified in medical physics by a specialty board recognized by the Commission or an Agreement State; or

(II) In clinical nuclear medicine facilities providing diagnostic and/or therapeutic services under the direction of physicians who meet the requirements for authorized users in §§175.103(j)(14), 175.103(j)(5), or 175.103(j)(6) of this Code;

(C) Pass an examination, administered by diplomates of the specialty board that assesses knowledge and competence in clinical diagnostic radiological or nuclear medicine physics and in radiation safety; or

(D) Has completed a structured educational program consisting of both:

(a) 200 hours of classroom and laboratory training in the following areas—

(I) Radiation physics and instrumentation;

(II) Radiation protection;
(III) Mathematics pertaining to the use and measurement of radioactivity;
(IV) Radiation biology; and
(V) Radiation dosimetry; and
(b) One year of full-time radiation safety experience under the supervision of the individual identified as the Radiation Safety Officer on a Commission or Agreement State license or permit issued by a Commission master material licensee that authorizes similar type(s) of use(s) of byproduct material involving the following—
(I) Shipping, receiving, and performing related radiation surveys;
(II) Using and performing checks for proper operation of instruments used to determine the activity of dosages, survey meters, and instruments used to measure radionuclides;
(III) Securing and controlling byproduct material;
(IV) Using administrative controls to avoid mistakes in the administration of byproduct material;
(V) Using procedures to prevent or minimize radioactive contamination and using proper decontamination procedures;
(VI) Using emergency procedures to control byproduct material; and
(VII) Disposing of byproduct material; or
(E) Reserved.
(ii)(A) Is a medical physicist who has been certified by a specialty board whose certification process has been recognized by the Commission or an Agreement State under §175.103(j)(2)(i) and has experience in radiation safety for similar types of use of byproduct material for which the licensee is seeking the approval of the individual as Radiation Safety Officer and who meets the requirements in subparagraphs (iii) and (iv) of this paragraph; or
(B) Is an authorized user, authorized medical physicist, or authorized nuclear pharmacist identified on the licensee's license and has experience with the radiation safety aspects of similar types of use of byproduct material for which the individual has Radiation Safety Officer responsibilities; and,
(iii) Has obtained written attestation, signed by a preceptor Radiation Safety Officer, that the individual has satisfactorily completed the requirements in subparagraph (iv) of this paragraph and in items (a) and (b) of clause (A) of subparagraph (i) of this paragraph or items (a) and (b) of clause (B) of subparagraph (i) of this paragraph or clause (D) of subparagraph (ii) of this paragraph or clauses (A) or (B) of subparagraph (ii) of this paragraph, and has achieved a level of radiation safety knowledge sufficient to function independently as a Radiation Safety Officer for a medical use licensee; and
(iv) Has training in the radiation safety, regulatory issues, and emergency procedures for the types of use for which a licensee seeks approval. This training requirement may be satisfied by completing training that is supervised by a Radiation Safety Officer, authorized medical physicist, authorized nuclear pharmacist, or authorized user, as appropriate, who is authorized for the type(s) of use for which the licensee is seeking approval.
(2) *Training for an authorized medical physicist.* Except as provided in §175.103(j)(14) of this Code, the licensee shall require the authorized medical physicist to be an individual who—
(i) Is certified by a specialty board whose certification process has been recognized by the Commission or an Agreement State and who meets the requirements in clause (B) of subparagraph (ii) and subparagraph (iii) of this paragraph. (The names of board certifications which have been recognized by the Commission or an Agreement State will be posted on the

NRC website.) To have its certification process recognized, a specialty board shall require all candidates for certification to:

(A) Hold a master's or doctor's degree in physics, medical physics, other physical science, engineering, or applied mathematics from an accredited college or university;

(B) Have 2 years of full-time practical training and/or supervised experience in medical physics—

(a) Under the supervision of a medical physicist who is certified in medical physics by a specialty board recognized by the Commission or an Agreement State; or

(b) In clinical radiation facilities providing high-energy, external beam therapy (photons and electrons with energies greater than or equal to 1 million electron volts) and brachytherapy services under the direction of physicians who meet the requirements in §175.103(j)(14), 175.103(j)(10), or 175.103(j)(13) of this Code; and

(C) Pass an examination, administered by diplomates of the specialty board, that assesses knowledge and competence in clinical radiation therapy, radiation safety, calibration, quality assurance, and treatment planning for external beam therapy, brachytherapy, and stereotactic radiosurgery; or

(D) Holds a master's or doctor's degree in physics, medical physics, other physical science, engineering, or applied mathematics from an accredited college or university; and has completed 1 year of full-time training in medical physics and an additional year of full-time work experience under the supervision of an individual who meets the requirements for an authorized medical physicist for the type(s) of use for which the individual is seeking authorization. This training and work experience shall be conducted in clinical radiation facilities that provide high-energy, external beam therapy (photons and electrons with energies greater than or equal to 1 million electron volts) and brachytherapy services and shall include:

(a) Performing sealed source leak tests and inventories;

(b) Performing decay corrections;

(c) Performing full calibration and periodic spot checks of external beam treatment units, stereotactic radiosurgery units, and remote afterloading units as applicable; and

(d) Conducting radiation surveys around external beam treatment units, stereotactic radiosurgery units, and remote afterloading units as applicable; and

(e) Has obtained written attestation that the individual has satisfactorily completed the requirements in item (f) of clause (D) of subparagraph (i) and clauses (A) and (B) of subparagraph (i), or clause (D) of subparagraph (i) of this paragraph, and has achieved a level of competency sufficient to function independently as an authorized medical physicist for each type of therapeutic medical unit for which the individual is requesting authorized medical physicist status. The written attestation shall be signed by a preceptor authorized medical physicist who meets the requirements in §§175.103(j)(2), 175.103(j)(14), or equivalent NRC or Agreement State requirements for an authorized medical physicist for each type of therapeutic medical unit for which the individual is requesting authorized medical physicist status; and

(f) Has training for the type(s) of use for which authorization is sought that includes hands-on device operation, safety procedures, clinical use, and the operation of a treatment planning system. This training requirement may be satisfied by satisfactorily completing either a training program provided by the vendor or by training supervised by an authorized medical physicist authorized for the type(s) of use for which the individual is seeking authorization.

(3) *Training for authorized nuclear pharmacist*. Except as provided in §175.103(j)(14) of this Code, the licensee shall require the authorized nuclear pharmacist to be a pharmacist who—

(i) Is certified by a specialty board whose certification process has been recognized by the Commission or an Agreement State and who meets the requirements in item (f) of clause (G) of subparagraph (ii) of this paragraph. (The names of board certifications which have been recognized by the Commission or an Agreement State will be posted on the NRC website.) To have its certification process recognized, a specialty board shall require all candidates for certification to:

(A) Have graduated from a pharmacy program accredited by the American Council on Pharmaceutical Education (ACPE) or have passed the Foreign Pharmacy Graduate Examination Committee (FPGEC) examination;

(B) Hold a current, active license to practice pharmacy;

(C) Provide evidence of having acquired at least 4000 hours of training/experience in nuclear pharmacy practice. Academic training may be substituted for no more than 2000 hours of the required training and experience; and

(D) Pass an examination in nuclear pharmacy administered by diplomates of the specialty board, that assesses knowledge and competency in procurement, compounding, quality assurance, dispensing, distribution, health and safety, radiation safety, provision of information and consultation, monitoring patient outcomes, research and development; or

(ii) Has completed 700 hours in a structured educational program consisting of both:

(A) 200 hours of classroom and laboratory training in the following areas—

(B) Radiation physics and instrumentation;

(C) Radiation protection;

(D) Mathematics pertaining to the use and measurement of radioactivity;

(E) Chemistry of byproduct material for medical use; and

(F) Radiation biology; and

(G) Supervised practical experience in a nuclear pharmacy involving—

(a) Shipping, receiving, and performing related radiation surveys;

(b) Using and performing checks for proper operation of instruments used to determine the activity of dosages, survey meters, and, if appropriate, instruments used to measure alpha- or beta-emitting radionuclides;

(c) Calculating, assaying, and safely preparing dosages for patients or human research subjects;

(d) Using administrative controls to avoid medical events in the administration of byproduct material; and

(e) Using procedures to prevent or minimize radioactive contamination and using proper decontamination procedures; and

(f) Has obtained written attestation, signed by a preceptor authorized nuclear pharmacist, that the individual has satisfactorily completed the requirements in clauses (A) through (C) of subparagraphs (i) or clause (A) of subparagraph (ii) of this paragraph and has achieved a level of competency sufficient to function independently as an authorized nuclear pharmacist.

(4) *Training for uptake, dilution, or excretion studies.* Except as provided in §175.103(j)(14) of this Code, the licensee shall require an authorized user of unsealed byproduct material for the uses authorized under §175.103(d)(1) of this Code to be a physician who—

(i) Is certified by a medical specialty board whose certification process has been recognized by the Commission or an Agreement State and who meets the requirements in clause (B) of subparagraph (iii) of this paragraph. (The names of board certifications which have been recognized by the Commission or an Agreement State will be posted on the NRC website.) To

have its certification process recognized, a specialty board shall require all candidates for certification to:

(A) Complete 60 hours of training and experience in basic radionuclide handling techniques and radiation safety applicable to the medical use of unsealed byproduct material for uptake, dilution, and excretion studies as described in clause (A) of subparagraph (iii) of this paragraph; and

(B) Pass an examination, administered by diplomates of the specialty board, that assesses knowledge and competence in radiation safety, radionuclide handling, and quality control; or

(ii) Is an authorized user under §§175.103(j)(5), 175.103(j)(6) of this Code, or equivalent NRC or Agreement State requirements;

(iii)(A) Has completed 60 hours of training and experience, including a minimum of 8 hours of classroom and laboratory training, in basic radionuclide handling techniques applicable to the medical use of unsealed byproduct material for uptake, dilution, and excretion studies. The training and experience shall include—

(a) Classroom and laboratory training in the following areas—

(I) Radiation physics and instrumentation;

(II) Radiation protection;

(III) Mathematics pertaining to the use and measurement of radioactivity;

(IV) Chemistry of byproduct material for medical use; and

(V) Radiation biology; and

(b) Work experience, under the supervision of an authorized user who meets the requirements in §§175.103(j)(14), 175.103(j)(4), 175.103(j)(5), 175.103(j)(6) of this Code, or NRC or equivalent Agreement State requirements, involving—

(I) Ordering, receiving, and unpacking radioactive materials safely and performing the related radiation surveys;

(II) Performing quality control procedures on instruments used to determine the activity of dosages and performing checks for proper operation of survey meters;

(III) Calculating, measuring, and safely preparing patient or human research subject dosages;

(IV) Using administrative controls to prevent a medical event involving the use of unsealed byproduct material;

(V) Using procedures to contain spilled byproduct material safely and using proper decontamination procedures; and

(VI) Administering dosages of radioactive drugs to patients or human research subjects; and

(B) Has obtained written attestation, signed by a preceptor authorized user who meets the requirements in §§175.103(j)(14), 175.103(j)(4), 175.103(j)(5), or 175.103(j)(6) of this Code, or NRC or equivalent Agreement State requirements, that the individual has satisfactorily completed the requirements in clause (A) of subparagraph (i) or clause (A) of subparagraph (iii) of this paragraph and has achieved a level of competency sufficient to function independently as an authorized user for the medical uses authorized under §175.103(d)(1) of this Code.

(5) *Training for imaging and localization studies.* Except as provided in §175.103(j)(14) of this Code, the licensee shall require an authorized user of unsealed byproduct material for the uses authorized under §175.103(d)(2) of this Code to be a physician who—

(i) Is certified by a medical specialty board whose certification process has been recognized by the Commission or an Agreement State and who meets the requirements in clause (B) of subparagraph (iii) of this paragraph. (The names of board certifications which have been recognized by the Commission or an Agreement State will be posted on the NRC website.) To

have its certification process recognized, a specialty board shall require all candidates for certification to:

(A) Complete 700 hours of training and experience in basic radionuclide handling techniques and radiation safety applicable to the medical use of unsealed byproduct material for imaging and localization studies that includes the topics listed in items (a) through (b) of clause (A) of subparagraph (iii) of this paragraph; and

(B) Pass an examination, administered by diplomates of the specialty board, which assesses knowledge and competence in radiation safety, radionuclide handling, and quality control; or

(ii) Is an authorized user under §175.103(j)(6) and meets the requirements in §175.103(j)(5)(iii)(A)(b)(VII) of this Code, or equivalent NRC or Agreement State requirements; or

(iii)(A) Has completed 700 hours of training and experience, including a minimum of 80 hours of classroom and laboratory training, in basic radionuclide handling techniques applicable to the medical use of unsealed byproduct material for imaging and localization studies. The training and experience shall include, at a minimum—

(a) Classroom and laboratory training in the following areas—

(I) Radiation physics and instrumentation;

(II) Radiation protection;

(III) Mathematics pertaining to the use and measurement of radioactivity;

(IV) Chemistry of byproduct material for medical use;

(V) Radiation biology; and

(b) Work experience, under the supervision of an authorized user who meets the requirements in §§175.103(j)(14), 175.103(j)(5), or 175.103(j)(5)(iii)(A)(b)(VII) and 175.103(j)(6) of this Code or equivalent NRC or Agreement State requirements, involving—

(I) Ordering, receiving, and unpacking radioactive materials safely and performing the related radiation surveys;

(II) Performing quality control procedures on instruments used to determine the activity of dosages and performing checks for proper operation of survey meters;

(III) Calculating, measuring, and safely preparing patient or human research subject dosages;

(IV) Using administrative controls to prevent a medical event involving the use of unsealed byproduct material;

(V) Using procedures to safely contain spilled radioactive material and using proper decontamination procedures;

(VI) Administering dosages of radioactive drugs to patients or human research subjects; and

(VII) Eluting generator systems appropriate for preparation of radioactive drugs for imaging and localization studies, measuring and testing the eluate for radionuclidic purity, and processing the eluate with reagent kits to prepare labeled radioactive drugs; and

(B) Has obtained written attestation, signed by a preceptor authorized user who meets the requirements in §§175.103(j)(14), 175.103(j)(5), or 175.103(j)(6) and 175.103(j)(5) (iii)(A)(b)(VII) of this Code or equivalent NRC or Agreement State requirements, that the individual has satisfactorily completed the requirements in clause (A) of subparagraph (i) or clause (A) of subparagraph (iii) of this paragraph and has achieved a level of competency sufficient to function independently as an authorized user for the medical uses authorized under §§175.103(d)(1) and 175.103(d)(2) of this Code.

(6) *Training for use of unsealed byproduct material for which a written directive is required.* Except as provided in §175.103(j)(14) of this Code, the licensee shall require an authorized user

of unsealed byproduct material for the uses authorized under §175.103(e)(1) of this Code to be a physician who—

(i) Is certified by a medical specialty board whose certification process has been recognized by the Commission or an Agreement State and who meets the requirements in number (VII) of item (b) of clause (A) and clause (B) of subparagraph (ii) of this paragraph. (Specialty boards whose certification processes have been recognized by the Commission or an Agreement State will be posted on the NRC website.) To be recognized, a specialty board shall require all candidates for certification to:

(A) Successfully complete residency training in a radiation therapy or nuclear medicine training program or a program in a related medical specialty. These residency training programs shall include 700 hours of training and experience as described in item (a) of clause (A) through number (V) of item (b) of clause (A) of subparagraph (ii) of this paragraph. Eligible training programs shall be approved by the Residency Review Committee of the Accreditation Council for Graduate Medical Education, the Royal College of Physicians and Surgeons of Canada, or the Committee on Post-Graduate Training of the American Osteopathic Association; and

(B) Pass an examination, administered by diplomates of the specialty board, which tests knowledge and competence in radiation safety, radionuclide handling, quality assurance, and clinical use of unsealed byproduct material for which a written directive is required; or

(ii)(A) Has completed 700 hours of training and experience, including a minimum of 200 hours of classroom and laboratory training, in basic radionuclide handling techniques applicable to the medical use of unsealed byproduct material requiring a written directive. The training and experience shall include—

(a) Classroom and laboratory training in the following areas—

(I) Radiation physics and instrumentation;

(II) Radiation protection;

(III) Mathematics pertaining to the use and measurement of radioactivity;

(IV) Chemistry of byproduct material for medical use; and

(V) Radiation biology; and

(b) Work experience, under the supervision of an authorized user who meets the requirements in §§175.103(j)(14), 175.103(j)(6) of this Code, or equivalent NRC or Agreement State requirements. A supervising authorized user, who meets the requirements in §175.103(j)(6)(ii) of this Code, shall also have experience in administering dosages in the same dosage category or categories (i.e., §175.103(j)(6)(ii)(A)(b)(VII) of this Code) as the individual requesting authorized user status. The work experience shall involve—

(I) Ordering, receiving, and unpacking radioactive materials safely and performing the related radiation surveys;

(II) Performing quality control procedures on instruments used to determine the activity of dosages, and performing checks for proper operation of survey meters;

(III) Calculating, measuring, and safely preparing patient or human research subject dosages;

(IV) Using administrative controls to prevent a medical event involving the use of unsealed byproduct material;

(V) Using procedures to contain spilled byproduct material safely and using proper decontamination procedures;

(VI) Reserved.

(VII) Administering dosages of radioactive drugs to patients or human research subjects involving a minimum of three cases in each of the following categories for which the individual is requesting authorized user status—

(1) Oral administration of less than or equal to 1.22 gigabecquerels (33 millicuries) of sodium iodide I–131, for which a written directive is required;

(2) Oral administration of greater than 1.22 gigabecquerels (33 millicuries) of sodium iodide I-1312;

(3) Parenteral administration of any beta emitter, or a photon- emitting radionuclide with a photon energy less than 150 keV, for which a written directive is required; and/or

(4) Parenteral administration of any other radionuclide, for which a written directive is required; and

(B) Has obtained written attestation that the individual has satisfactorily completed the requirements in clause (A) of subparagraph (i) and number (VII) of item (b) of clause (A) of subparagraph (ii) or clause (A) of subparagraph (ii) of this paragraph, and has achieved a level of competency sufficient to function independently as an authorized user for the medical uses authorized under §175.103(e)(1) of this Code. The written attestation shall be signed by a preceptor authorized user who meets the requirements in §§175.103(j)(14), 175.103(j)(6) of this Code, or equivalent Agreement State requirements. The preceptor authorized user, who meets the requirements in §175.103(j)(6)(ii) of this Code shall have experience in administering dosages in the same dosage category or categories (i.e., §175.103(j)(6)(ii)(a)(VII) of this Code) as the individual requesting authorized user status.

(7) *Training for the oral administration of sodium iodide I-131 requiring a written directive in quantities less than or equal to 1.22 gigabecquerels (33 millicuries).* Except as provided in §175.103(j)(14) of this Code, the licensee shall require an authorized user for the oral administration of sodium iodide I-131 requiring a written directive in quantities less than or equal to 1.22 Gigabecquerels (33 millicuries), to be a physician who—

(i) Is certified by a medical specialty board whose certification process includes all of the requirements in clauses (A) and (B) of subparagraphs (iii) of this paragraph and whose certification process has been recognized by the Commission or an Agreement State and who meets the requirements in clause (C) of subparagraph (iii) of this paragraph. (The names of board certifications which have been recognized by the Commission or an Agreement State will be posted on the NRC website.); or

(ii) Is an authorized user under §175.103(j)(6) for uses listed in §175.103(j)(6)(ii)(A)(b)(VIII)(1) or (2), §175.103(j)(8) of this Code, or equivalent NRC or Agreement State requirements; or

(iii)(A) Has successfully completed 80 hours of classroom and laboratory training, applicable to the medical use of sodium iodide I-131 for procedures requiring a written directive. The training shall include—

(a) Radiation physics and instrumentation;

(b) Radiation protection;

(c) Mathematics pertaining to the use and measurement of radioactivity;

(d) Chemistry of byproduct material for medical use; and

(e) Radiation biology; and

(B) Has work experience, under the supervision of an authorized user who meets the requirements in §§175.103(j)(14), 175.103(j)(6), 175.103(j)(7), 175.103(j)(8) of this Code, or equivalent NRC or Agreement State requirements. A supervising authorized user who meets the

requirements in §175.103(j)(6)(ii shall also have experience in administering dosages as specified in §§175.103(j)(6) (ii)(A)(b)(VII)(1) or 175.103(j)(6)(ii)(A)(b)(VII)(2) of this Code. The work experience shall involve—

*(a)*Ordering, receiving, and unpacking radioactive materials safely and performing the related radiation surveys;

(b) Performing quality control procedures on instruments used to determine the activity of dosages and performing checks for proper operation of survey meters;

(c) Calculating, measuring, and safely preparing patient or human research subject dosages;

(d) Using administrative controls to prevent a medical event involving the use of byproduct material;

(e) Using procedures to contain spilled byproduct material safely and using proper decontamination procedures; and

(f) Administering dosages to patients or human research subjects, that includes at least 3 cases involving the oral administration of less than or equal to 1.22 gigabecquerels (33 millicuries) of sodium iodide I-131; and

(C) Has obtained written attestation that the individual has satisfactorily completed the requirements in clauses (A) and (B) of subparagraph (iii) of this paragraph, and has achieved a level of competency sufficient to function independently as an authorized user for medical uses authorized under §175.103(e)(1) of this Code. The written attestation shall be signed by a preceptor authorized user who meets the requirements in §§175.103(j)(14), 175.103(j)(6), 175.103(j)(7), 175.103(j)(8) of this Code, or equivalent NRC or Agreement State requirements. A preceptor authorized user, who meets the requirement in §175.103(j)(6)(b), shall also have experience in administering dosages as specified in §§175.103(j)(6 ii)(A)(b)(VII)(1) or 175.103(j)(6)(ii)(A)(b)(VII)(2) of this Code.

(8) *Training for the oral administration of sodium iodide I-131 requiring a written directive in quantities greater than 1.22 gigabecquerels (33 millicuries).*

Except as provided in 175.103(j)(14) of this Code, the licensee shall require an authorized user for the oral administration of sodium iodide I-131 requiring a written directive in quantities greater than 1.22 Gigabecquerels (33 millicuries), to be a physician who—

(i) Is certified by a medical specialty board whose certification process includes all of the requirements in clauses (A) and (B) of subparagraph (iii) of this paragraph , and whose certification has been recognized by the NRC or an Agreement State, and who meets the requirements in clause (C) in subparagraph (iii) of this paragraph. (The names of board certifications which have been recognized by the Commission or an Agreement State will be posted on the NRC website.); or

(ii) Is an authorized user under §175.103(j)(6) for uses listed in §175.103(j)(6)(ii)(A) (b)(VII)(2) of this Code or equivalent NRC or Agreement State requirements; or

(iii)(A) Has successfully completed 80 hours of classroom and laboratory training, applicable to the medical use of sodium iodide I-131 for procedures requiring a written directive. The training shall include—

(a) Radiation physics and instrumentation;

(b) Radiation protection;

(c) Mathematics pertaining to the use and measurement of radioactivity;

(d) Chemistry of byproduct material for medical use; and

(e) Radiation biology; and

(B) Has work experience, under the supervision of an authorized user who meets the requirements in §§175.103(j)(14), 175.103(j)(6), 175.103(j)(8) of this Code, or equivalent NRC or Agreement State requirements. A supervising authorized user, who meets the requirements in §175.103(j)(6)(ii) of this Code, shall also have experience in administering dosages as specified in §175.103(j)(6)(ii)(A)(b)(VII)(2) of this Code. The work experience shall involve—

(a) Ordering, receiving, and unpacking radioactive materials safely and performing the related radiation surveys;

(b) Performing quality control procedures on instruments used to determine the activity of dosages and performing checks for proper operation of survey meters;

(c) Calculating, measuring, and safely preparing patient or human research subject dosages;

(d) Using administrative controls to prevent a medical event involving the use of byproduct material;

(e) Using procedures to contain spilled byproduct material safely and using proper decontamination procedures; and

(f) Administering dosages to patients or human research subjects, that includes at least 3 cases involving the oral administration of greater than 1.22 gigabecquerels (33 millicuries) of sodium iodide I-131; and

(C) Has obtained written attestation that the individual has satisfactorily completed the requirements in clauses (A) and (B) of subparagraph (iii) of this paragraph, and has achieved a level of competency sufficient to function independently as an authorized user for medical uses authorized under §175.103(e)(1) of this Code. The written attestation shall be signed by a preceptor authorized user who meets the requirements in §§175.103(j)(14), 175.103(j)(6), 175.103(j)(8) of this Code, or equivalent NRC or Agreement State requirements. A preceptor authorized user, who meets the requirements in §175.103(j)(6)(b), shall also have experience in administering dosages as specified in §175.103(j)(6)(ii)(A)(b)(VII)(2) of this Code.

(9) *Training for the parenteral administration of unsealed byproduct material requiring a written directive.* Except as provided in §175.103(j)(14) of this Code, the licensee shall require an authorized user for the parenteral administration requiring a written directive, to be a physician who—

(i) Is an authorized user under §175.103(j)(6) for uses listed in §§175.103(j)(6) (ii)(A)(b)(VII)(3) or 175.103(j)(6) (ii)(A)(b)(VII)4) of this Code, or equivalent NRC or Agreement State requirements; or

(ii) Is an authorized user under §§175.103(j)(10), 175.103(j)(13) of this Code, or equivalent NRC or Agreement State requirements and who meets the requirements in sub paragraph (iv) of this section; or

(iii) Is certified by a medical specialty board whose certification process has been recognized by the Commission or an Agreement State under §§175.103(j)(10) or 175.103(j)(13) of this Code, and who meets the requirements in subparagraph (iv) of this section.

(iv)(A) Has successfully completed 80 hours of classroom and laboratory training, applicable to parenteral administrations, for which a written directive is required, of any beta emitter, or any photon-emitting radionuclide with a photon energy less than 150 keV, and/or parenteral administration of any other radionuclide for which a written directive is required. The training shall include—

(a) Radiation physics and instrumentation;

(b) Radiation protection;

(c) Mathematics pertaining to the use and measurement of radioactivity;

(d) Chemistry of byproduct material for medical use; and

(e) Radiation biology; and

(B) Has work experience, under the supervision of an authorized user who meets the requirements in §§175.103(j)(14), 175.103(j)(6), 175.103(j)(9) of this Code, or equivalent NRC or Agreement State requirements, in the parenteral administration, for which a written directive is required, of any beta emitter, or any photon-emitting radionuclide with a photon energy less than 150 keV, and/or parenteral administration of any other radionuclide for which a written directive is required. A supervising authorized user who meets the requirements in §175.103(j)(6) of this Code shall have experience in administering dosages as specified in §§175.103(j)(6) (ii)(A)(b)(VII)(3) and/or 175.103(j)(6) (ii)(A)(b)(VII)(4) of this Code. The work experience shall involve—

(a) Ordering, receiving, and unpacking radioactive materials safely, and performing the related radiation surveys;

(b) Performing quality control procedures on instruments used to determine the activity of dosages, and performing checks for proper operation of survey meters;

(c) Calculating, measuring, and safely preparing patient or human research subject dosages;

(d) Using administrative controls to prevent a medical event involving the use of unsealed byproduct material;

(e) Using procedures to contain spilled byproduct material safely, and using proper decontamination procedures; and

(f) Administering dosages to patients or human research subjects, that include at least 3 cases involving the parenteral administration, for which a written directive is required, of any beta emitter, or any photon-emitting radionuclide with a photon energy less than 150 keV and/or at least 3 cases involving the parenteral administration of any other radionuclide, for which a written directive is required; and

(C) Has obtained written attestation that the individual has satisfactorily completed the requirements in subparagraphs (ii) or (iii) of this paragraph, and has achieved a level of competency sufficient to function independently as an authorized user for the parenteral administration of unsealed byproduct material requiring a written directive. The written attestation shall be signed by a preceptor authorized user who meets the requirements in §§175.103(j)(14), 175.103(j)(6), 175.103(j)(9) of this Code, or equivalent NRC or Agreement State requirements. A preceptor authorized user, who meets the requirements in §175.103(j)(6) of this Code, shall have experience in administering dosages as specified in §§175.103(j)(6) (ii)(A)(b)(VII)(3) and/or 175.103(j)(6) (ii)(A)(b)(VII)(4) of this Code.

(10) *Training for use of manual brachytherapy sources.* Except as provided in §175.103(j)(14) of this Code, a licensee shall require an authorized user of a manual brachytherapy source for the uses authorized under §175.103(f)(1) to be a physician who —

(i) Is certified by a medical specialty board whose certification process has been recognized by the Commission or an Agreement State, and who meets the requirements in clause (C) of subparagraph (ii) of this paragraph. (The names of board certifications which have been recognized by the Commission or an Agreement State will be posted on the NRC website.) To have its certification process recognized, a specialty board shall require all candidates for certification to:

(A) Successfully complete a minimum of 3 years of residency training in a radiation oncology program approved by the Residency Review Committee of the Accreditation Council for

Graduate Medical Education or the Royal College of Physicians and Surgeons of Canada or the Committee on Post-Graduate Training of the American Osteopathic Association; and

(B) Pass an examination, administered by diplomates of the specialty board, that tests knowledge and competence in radiation safety, radionuclide handling, treatment planning, quality assurance, and clinical use of manual brachytherapy; or

(ii)(A) Has completed a structured educational program in basic radionuclide handling techniques applicable to the use of manual brachytherapy sources that includes—

(a) 200 hours of classroom and laboratory training in the following areas—

(I) Radiation physics and instrumentation;

(II) Radiation protection;

(III) Mathematics pertaining to the use and measurement of radioactivity; and

(IV) Radiation biology; and

(b) 500 hours of work experience, under the supervision of an authorized user who meets the requirements in §§175.103(j)(14), 175.103(j)(10) of this Code, or equivalent NRC or Agreement State requirements at a medical institution, involving—

(I) Ordering, receiving, and unpacking radioactive materials safely and performing the related radiation surveys;

(II) Checking survey meters for proper operation;

(III) Preparing, implanting, and removing brachytherapy sources;

(IV) Maintaining running inventories of material on hand;

(V) Using administrative controls to prevent a medical event involving the use of byproduct material;

(VI) Using emergency procedures to control byproduct material; and

(B) Has completed 3 years of supervised clinical experience in radiation oncology, under an authorized user who meets the requirements in §§175.103(j)(14), 175.103(j)(10) of this Code, or equivalent NRC or Agreement State requirements, as part of a formal training program approved by the Residency Review Committee for Radiation Oncology of the Accreditation Council for Graduate Medical Education or the Royal College of Physicians and Surgeons of Canada or the Committee on Postdoctoral Training of the American Osteopathic Association. This experience may be obtained concurrently with the supervised work experience required by item (a) of clause (A) of subparagraph (ii) of this paragraph; and

(C) Has obtained written attestation, signed by a preceptor authorized user who meets the requirements in §§175.103(j)(14), 175.103(j)(10) of this Code, or equivalent NRC or Agreement State requirements, that the individual has satisfactorily completed the requirements in clause (A) of subparagraph (i), or clauses (A) and (B) of subparagraph (ii) of this paragraph and has achieved a level of competency sufficient to function independently as an authorized user of manual brachytherapy sources for the medical uses authorized under §175.103(f)(1) of this Code.

(11) *Training for ophthalmic use of strontium-90.* Except as provided in §175.103(j)(14) of this Code, the licensee shall require the authorized user of strontium-90 for ophthalmic radiotherapy to be a physician who—

(i) Is an authorized user under §175.103(j)(10) of this Code or equivalent NRC or Agreement State requirements; or

(ii)(A) Has completed 24 hours of classroom and laboratory training applicable to the medical use of strontium-90 for ophthalmic radiotherapy. The training shall include—

(a) Radiation physics and instrumentation;

(b) Radiation protection;

(c) Mathematics pertaining to the use and measurement of radioactivity; and

(d) Radiation biology; and

(B) Supervised clinical training in ophthalmic radiotherapy under the supervision of an authorized user at a medical institution, clinic, or private practice that includes the use of strontium-90 for the ophthalmic treatment of five individuals. This supervised clinical training shall involve—

(a) Examination of each individual to be treated;

(b) Calculation of the dose to be administered;

(c) Administration of the dose; and

(d) Follow up and review of each individual's case history; and

(C) Has obtained written attestation, signed by a preceptor authorized user who meets the requirements in §§175.103(j)(14), 175.103(j)(10), 175.103(j)(11) of this Code, or equivalent NRC or Agreement State requirements, that the individual has satisfactorily completed the requirements in subparagraphs (i) and (ii) of this paragraph and has achieved a level of competency sufficient to function independently as an authorized user of strontium-90 for ophthalmic use.

(12) *Training for use of sealed sources for diagnosis.* Except as provided in §175.103(j)(14) of this Code, the licensee shall require the authorized user of a diagnostic sealed source for use in a device authorized under §175.103(g)(1) of this Code to be a physician, dentist, or podiatrist who—

(i) Is certified by a specialty board whose certification process includes all of the requirements in subparagraphs (ii) and (iii) of this paragraph and whose certification has been recognized by the Commission or an Agreement State. (The names of board certifications which have been recognized by the Commission or an Agreement State will be posted on the NRC website.); or

(ii) Has completed 8 hours of classroom and laboratory training in basic radionuclide handling techniques specifically applicable to the use of the device. The training shall include—

(A) Radiation physics and instrumentation;

(B) Radiation protection;

(C) Mathematics pertaining to the use and measurement of radioactivity; and

(D) Radiation biology; and

(iii) Has completed training in the use of the device for the uses requested.

(13) *Training for use of remote afterloader units, teletherapy units, and gamma stereotactic radiosurgery units.* Except as provided in §175.103(j)(14) of this Code, the licensee shall require an authorized user of a sealed source for a use authorized under §175.103(h)(1) of this Code to be a physician who—

(i) Is certified by a medical specialty board whose certification process has been recognized by the Commission or an Agreement State and who meets the requirements in clause (C) of subparagraph (ii) and subparagraph (iii) of this paragraph. (The names of board certifications which have been recognized by the Commission or an Agreement State will be posted on the NRC website.) To have its certification process recognized, a specialty board shall require all candidates for certification to:

(A) Successfully complete a minimum of 3 years of residency training in a radiation therapy program approved by the Residency Review Committee of the Accreditation Council for Graduate Medical Education or the Royal College of Physicians and Surgeons of Canada or the Committee on Post-Graduate Training of the American Osteopathic Association; and

(B) Pass an examination, administered by diplomates of the specialty board, which tests knowledge and competence in radiation safety, radionuclide handling, treatment planning, quality assurance, and clinical use of stereotactic radiosurgery, remote afterloaders and external beam therapy; or

(ii)(A) Has completed a structured educational program in basic radionuclide techniques applicable to the use of a sealed source in a therapeutic medical unit that includes—

(a) 200 hours of classroom and laboratory training in the following areas—

(I) Radiation physics and instrumentation;

(II) Radiation protection;

(III) Mathematics pertaining to the use and measurement of radioactivity; and

(IV) Radiation biology; and

(b) 500 hours of work experience, under the supervision of an authorized user who meets the requirements in §§175.103(j)(14), 175.103(j)(13) of this Code, or equivalent NRC or Agreement State requirements at a medical institution, involving—

(I) Reviewing full calibration measurements and periodic spot-checks;

(II) Preparing treatment plans and calculating treatment doses and times;

(III) Using administrative controls to prevent a medical event involving the use of byproduct material;

(IV) Implementing emergency procedures to be followed in the event of the abnormal operation of the medical unit or console;

(V) Checking and using survey meters; and

(VI) Selecting the proper dose and how it is to be administered; and

(B) Has completed 3 years of supervised clinical experience in radiation therapy, under an authorized user who meets the requirements in §§175.103(j)(14), 175.103(j)(13) of this Code, or equivalent NRC or Agreement State requirements, as part of a formal training program approved by the Residency Review Committee for Radiation Oncology of the Accreditation Council for Graduate Medical Education or the Royal College of Physicians and Surgeons of Canada or the Committee on Postdoctoral Training of the American Osteopathic Association. This experience may be obtained concurrently with the supervised work experience required bysub paragraph (ii)(A)(b) of this section; and

(C) Has obtained written attestation that the individual has satisfactorily completed the requirements in clause (A) of subparagraph (i) or clauses (A) and (B) of subparagraph (ii) of this paragraph, and subparagraph (iii) of this paragraph, and has achieved a level of competency sufficient to function independently as an authorized user of each type of therapeutic medical unit for which the individual is requesting authorized user status. The written attestation shall be signed by a preceptor authorized user who meets the requirements in §§175.103(j)(14), 175.103(j)(13) of this Code, or equivalent NRC or Agreement State requirements for an authorized user for each type of therapeutic medical unit for which the individual is requesting authorized user status; and

(iii) Has received training in device operation, safety procedures, and clinical use for the type(s) of use for which authorization is sought. This training requirement may be satisfied by satisfactory completion of a training program provided by the vendor for new users or by receiving training supervised by an authorized user or authorized medical physicist, as appropriate, who is authorized for the type(s) of use for which the individual is seeking authorization.

(14) *Training for experienced Radiation Safety Officer, teletherapy or medical physicist, authorized medical physicist, authorized user, nuclear pharmacist, and authorized nuclear pharmacist.*

(i)(A) An individual identified as a Radiation Safety Officer, a teletherapy or medical physicist, or a nuclear pharmacist on a Commission or Agreement State license or a permit issued by a Commission or Agreement State broad scope licensee or master material license permit or by a master material license permittee of broad scope before October 24, 2002, need not comply with the training requirements of §§175.103(j)(1), 175.103(j)(2), or 175.103(j)(3) of this Code, respectively.

(B) An individual identified as a Radiation Safety Officer, an authorized medical physicist, or an authorized nuclear pharmacist on a Commission or Agreement State license or a permit issued by a Commission or Agreement State broad scope licensee or master material license permit or by a master material license permittee of broad scope between October 24, 2002 and April 29, 2005 need not comply with the training requirements of §§175.103(j)(1), 175.103(j)(2), or 175.103(j)(3) of this Code, respectively.

(C) A Radiation Safety Officer, a medical physicist, or a nuclear pharmacist, who used only accelerator-produced radioactive materials, discrete sources of radium-226, or both, for medical uses or in the practice of nuclear pharmacy at a Government agency or Federally recognized Indian Tribe before November 30, 2007 or at all other locations of use before August 8, 2009, or an earlier date as noticed by the NRC, need not comply with the training requirements of §175.103(j)(1), §175.103(j)(2) or §175.103(j)(3) of this Code, respectively, when performing the same uses. A nuclear pharmacist, who prepared only radioactive drugs containing accelerator-produced radioactive materials, or a medical physicist, who used only accelerator-produced radioactive materials, at the locations and time period identified in this paragraph, qualifies as an authorized nuclear pharmacist or an authorized medical physicist, respectively, for those materials and uses performed before these dates, for purposes of this chapter.

(ii)(A) Physicians, dentists, or podiatrists identified as authorized users for the medical use of byproduct material on a license issued by the Commission or Agreement State, a permit issued by a Commission master material licensee, a permit issued by a Commission or Agreement State broad scope licensee, or a permit issued by a Commission master material license broad scope permittee before October 24, 2002, who perform only those medical uses for which they were authorized on that date need not comply with the training requirements of Subparts D through H of 10 CFR Part 35.

(B) Physicians, dentists, or podiatrists identified as authorized users for the medical use of byproduct material on a license issued by the Commission or Agreement State, a permit issued by a Commission master material licensee, a permit issued by a Commission or Agreement State broad scope licensee, or a permit issued by a Commission master material license broad scope permittee who perform only those medical uses for which they were authorized between October 24, 2002 and April 29, 2005, need not comply with the training requirements of Subparts D through H of 10 CFR Part 35.

(C) Physicians, dentists, or podiatrists who used only accelerator-produced radioactive materials, discrete sources of radium-226, or both, for medical uses performed at a Government agency or Federally recognized Indian Tribe before November 30, 2007 or at all other locations of use before August 8, 2009, or an earlier date as noticed by the NRC, need not comply with the training requirements of subparts D through H of 10 CFR Part 35 when performing the same medical uses. A physician, dentist, or podiatrist, who used only accelerator-produced radioactive

materials, discrete sources of radium-226, or both, for medical uses at the locations and time period identified in this paragraph, qualifies as an authorized user for those materials and uses performed before these dates, for purposes of this chapter.

(iii) Individuals who need not comply with training requirements as described in this section may serve as preceptors for, and supervisors of, applicants seeking authorization on Department licenses for the same uses for which these individuals are authorized.

(15) *Recentness of training.* The training and experience specified in §175.103(j)(1) through (14) of this Code shall have been obtained within the 7 years preceding the date of application or the individual shall have had related continuing education and experience since the required training and experience was completed.

§175.104 Waste disposal.

(a) *General requirements.* (1) A licensee shall dispose of licensed material only:

(i) by transfer to an authorized recipient as provided in §175.101 or §175.104(f) of this Code, or to the U.S. Department of Energy; or

(ii) by decay in storage; or

(iii) by release in effluents within the limits in §175.03(d); or

(iv) as authorized under 10CFR §§20.2002, 20.2003, 20.2004, 20.2005, or 20.2006.

(2) A person shall be specifically licensed to receive waste containing licensed material from other persons for:

(i) treatment prior to disposal; or

(ii) treatment or disposal by incineration; or

(iii) decay in storage; or

(iv) disposal at a land disposal facility licensed pursuant to 10 CFR Part 61 or the equivalent regulations of an agreement state; or

(v) disposal at a geologic repository under 10 CRF Parts 60 or 63.

(3)(i) The licensed material that is described in subparagraphs (iii) and (iv) of the definition of byproduct material set forth in paragraph (34) of §175.02, may be disposed of in accordance with 10 CFR Part 61 or the equivalent regulations of an agreement state, even though it is not defined as low-level radioactive waste. Therefore, any licensed byproduct material being disposed of at a facility, or transferred for ultimate disposal at a facility licensed under 10 CFR Part 61 must meet the requirements of 10 CFR § 20.2006.

(ii) A licensee may dispose of byproduct material described in subparagraphs (iii) and (iv) of the definition of byproduct material set forth in paragraph (34) of §175.02, at a disposal facility authorized to dispose of such material in accordance with any federal, state or City solid or hazardous waste law, including the federal Solid Waste Disposal Act, as authorized under the federal Energy Policy Act of 2005.

(4) A licensee or applicant for a license shall obtain any permits required by the New York State Department of Environmental Conservation pursuant to 6 NYCRR Part 380, or any successor law or regulation.

(5) A licensee or applicant for a license shall develop, document and implement a discharge minimization program required by the New York State Department of Environmental Conservation pursuant to 6 NYCRR Section 380-7, or any successor law or regulation.

(b) *Method for obtaining approval of proposed disposal procedures.* (1) A licensee or applicant for a license may apply to the Department for approval of proposed disposal procedures,

not otherwise authorized in this Code, but which will conform to state and federal regulations, to dispose of licensed material generated in the licensee's operations. Each application shall include:

(i) a description of the waste containing licensed material to be disposed of, including the physical and chemical properties that have an impact on risk evaluation, and the proposed manner and conditions of waste disposal; and

(ii) an analysis and evaluation of pertinent information on the nature of the environment; and

(iii) the nature and location of other potentially affected facilities; and

(iv) analyses and procedures to ensure that doses are maintained ALARA and within the dose limits in §175.03.

(c) *Disposal by release into sanitary sewerage.* (1) A licensee may discharge licensed material into sanitary sewerage if each of the following conditions is satisfied:

(i) the material is readily soluble in water or is biological material that is readily dispersible in water; and

(ii) the quantity of licensed radioactive material that the licensee releases into the sewer in 1 month divided by the average monthly volume of water released into the sewer by the licensee does not exceed the concentration listed in Table 3 of Appendix B of §175.03; and

(iii) if more than one radionuclide is released, the following conditions must also be satisfied:

(A) the licensee shall determine the fraction of the limit in Table 3 of Appendix B of §175.03 represented by discharges into sanitary sewerage by dividing the actual monthly average concentration of each radionuclide released by the licensee into the sewer by the concentration of that radionuclide listed in Table 3 of Appendix B of §175.03; and

(B) the sum of the fractions for each radionuclide required by §175.104(c)(1)(iii)(A) does not exceed unity; and

(iv) the total quantity of licensed radioactive material that the licensee releases into the sanitary sewerage in a year does not exceed 37 GBq (1 Ci) of all radioactive materials combined.

(2) Excreta from individuals undergoing medical diagnosis or therapy with radioactive material are not subject to the limitations contained in §175.104(c)(1).

(d) *Treatment or disposal by incineration or burial.* (1) No person shall treat or dispose of licensed radioactive material by incineration except as specifically approved by the Department pursuant to §175.104(b).

(2) No person shall bury any licensed radioactive materials within this City.

(e) *Disposal of specific wastes.* (1) A licensee may ship for disposal outside of this City the following licensed material as if it were not radioactive, provided however, that the receiving jurisdiction regulates such materials as if they were not radioactive:

(i) 1.85 kBq (0.05 mCi), or less, of hydrogen-3 or carbon-14 per gram of medium used for liquid scintillation counting; and

(ii) 1.85 kBq (0.05 mCi), or less, of hydrogen-3 or carbon-14 per gram of animal tissue, averaged over the weight of the entire animal.

(2) A licensee shall not dispose of tissue pursuant to §175.104(e)(1)(ii) in a manner that would permit its use either as food for humans or as animal feed.

(3) The licensee shall maintain records in accordance with §175.03(k)(l0).

(f) *Transfer for disposal and manifests.* (1) The requirements of this subdivision and Appendix G to 10 CFR Part 20 are designed to:

(i) control transfers of low-level radioactive waste by any waste generator, waste collector, or waste processor licensee, as defined in Appendix G to 10 CFR Part 20, who ships low-level waste

either directly, or indirectly through a waste collector or waste processor, to a licensed low-level waste land disposal facility, as defined in 10 CFR §61.2;
(ii) establish a manifest tracking system, and
(iii) supplement existing requirements concerning transfers and recordkeeping for those wastes.
(2) Each shipment of radioactive waste designated for disposal at a licensed low-level radioactive waste disposal facility shall be accompanied by a shipment manifest as specified in Section I of Appendix G to 10 CFR Part 20.
(3) Each shipment manifest shall include a certification by the waste generator as specified in Section II of Appendix G to 10 CFR Part 20.
(4) Each person involved in the transfer of waste for disposal and disposal of waste, including the waste generator, waste collector, waste processor, and disposal facility operator, shall comply with the requirements specified in Section III of Appendix G to 10 CFR Part 20.
(5) Any licensee shipping byproduct material described in the definition of byproduct material set forth in subparagraphs (iii) and (iv) of paragraph (34) of §175.02, intended for ultimate disposal at a land disposal facility licensed under 10 CFR Part 61 must document the information required on the NRC's Uniform Low-Level Radioactive Waste Manifest and transfer this recorded manifest information to the intended consignee in accordance with 10 CFR Part 20, Appendix G.

(6) The licensee or applicant for a license shall comply with the requirements of the New York State Department of Environmental Conservation as codified in 6 NYCRR Part 381, or any successor law or regulation.

(7) Any licensee shipping radioactive waste intended for ultimate disposal at a licensed land disposal facility must document the information required on NRC's Uniform Low-Level Radioactive Waste Manifest and transfer this recorded manifest information to the intended consignee in accordance with Appendix G to 10 CFR Part 20.

(8) Any licensee shipping byproduct material as defined in §§175.02(a)(33)(iii) and (iv) intended for ultimate disposal at a land disposal facility licensed under 10 CFR Part 61 must document the information required on the NRC's Uniform Low-Level Radioactive Waste Manifest and transfer this recorded manifest information to the in-tended consignee in accordance with Appendix G to 10 CFR Part 20.

(g) *Compliance with environmental and health protection regulations.*

(1) Nothing in this section relieves the licensee from complying with other applicable Federal, State and local regulations governing any other toxic or hazardous properties of materials that may be disposed of pursuant to this section.

(h) *Records of waste disposal.* (1) The licensee shall maintain records of the disposal of licensed materials made under §175.104(b), (c), (d), (e) and 10 CFR Part 61 or the equivalent regulations of an agreement state.

(2) The licensee shall retain the records required by §175.104(h)(1) until the Department authorizes disposition.

APPENDIX A. (Reserved).

§175.105 Transportation and Packaging of Radioactive Materials.

Table of Contents for §175.105

(a) General provisions
(1) Purpose and scope

(2) Records
(3) Completeness and accuracy of information
(4) Requirement for license
(5) Definitions
(6) Transportation of licensed material

(b) Exemptions
(1) Exemption of physicians
(2) Exemption for low-level materials

(c) General Licenses
(1) General license: NRC-approved package
(2) Previously approved package
(3) General license: U.S. Department of Transportation specification container
(4) General license: Use of foreign approved package

(d) Operating Controls and Procedures
(1) Applicability of operating controls and procedures
(2) Preliminary determinations
(3) Routine determinations
(4) Air transport of plutonium
(5) Opening instructions
(6) Records
(7) Inspection and tests
(8) Reports
(9) Advance notification of shipment of irradiated reactor fuel and nuclear waste

(e) Quality Assurance
(1) Quality assurance requirements
(2) Quality assurance organization
(3) Quality assurance program
(4) Package design control
(5) Procurement document control
(6) Instructions, procedures, and drawings
(7) Document control
(8) Control of purchased material, equipment, and services
(9) Identification and control of materials, parts, and components
(10) Control of special processes
(11) Internal inspection
(12) Test control
(13) Control of measuring and test equipment
(14) Handling, storage, and shipping control
(15) Inspection, test, and operating status
(16) Nonconforming materials, parts, or components
(17) Corrective action
(18) Quality assurance records
(19) Audits

Appendices

Appendix A—Determination of A_1 and A_2

Table A-1—A_1 and A_2 Values for Radionuclides
Table A-2—General Values for A_1 and A_2

(a) *General Provisions.* (1) *Purpose and Scope.*

(i) This section establishes requirements for packaging, preparation for shipment, and transportation of licensed material. The packaging and transport of licensed material are also subject to other sections of this Code (e.g., §§175.03, 175.101) and to the regulations of other agencies (e.g., the U.S. Nuclear Regulatory Commission (NRC), the U.S. Department of Transportation (USDOT) and the U.S. Postal Service*) having jurisdiction over means of transport and other applicable state and local laws and regulations. The requirements of this section are in addition to, and not in substitution for, other requirements.

(ii) This section applies to any licensee authorized by specific or general license issued by the Department to receive, possess, use, or transfer licensed material, if the licensee delivers that material to a carrier for transport, transports the material outside the site of usage as specified in the Department license, or transports that material on public highways. No provision of this section authorizes possession of licensed material.

(iii) The requirements of this section apply to any person who has a license or who is required to obtain a license pursuant to this Code, if the person delivers radioactive material to a common or contract carrier for transport or transports the material outside the confines of the person's facility or other authorized place of use.

(2) *Records.* Each record required by this section must be legible throughout the retention period specified by this Code. The record may be the original or a reproduced copy or a microform provided that the copy or microform is authenticated by authorized personnel and that the microform is capable of producing a clear copy throughout the required retention period. The record may also be stored in electronic media with the capability for producing legible, accurate, and complete records during the required retention period. Records such as letters, drawings, specifications, must include all pertinent information such as stamps, initials, and signatures. The licensee shall maintain adequate safeguards against tampering with and loss of records.

(3) *Completeness and accuracy of information.*

(i) Information provided to the Department by an applicant for a license, or by a licensee, or information required by applicable laws or regulations, or licensed conditions to be maintained by the applicant or the licensee must be complete and accurate in all material respects.

(ii) Each applicant or licensee shall notify the Department of information identified by the applicant or licensee as having, for the regulated activity, a significant implication for public health and safety or common defense and security. An applicant or licensee violates this requirement if the applicant or licensee fails to notify the Department of information that the applicant or licensee has identified as having a significant implication for public health and safety or common defense and security. Notification must be provided to the Department within two working days of identifying the information. This requirement is not applicable to information that is already required to be provided to the Department by other reporting or updating requirements.

(4) *Requirement for license.*

(i) Except as authorized in a general license or a specific license issued by the Department, or as exempted in this section, no person may—

(A) Deliver licensed material to a carrier for transport; or

(B) Transport licensed material.

(ii) Exemptions from the requirement for license in §175.105(a)(4) are specified in §175.105(b)(2). General licenses for which no NRC package approval is required are issued in §§175.105(c)(3) and 175.105(c)(4). The general license in §175.105(c)(1) requires that an NRC certificate of compliance or other package approval be issued for the package to be used under the general license. The transport of licensed material or delivery of licensed material to a carrier for transport is subject to the operating controls and procedures requirements of §175.105(d), to the quality assurance requirements of §175.105(e), and to the general provisions of §175.105(a), including USDOT regulations referenced in §175.105(a)(6).

(5) *Definitions.* The following terms are defined herein for the purpose of this section. These definitions are in addition to those in §175.02. To ensure compatibility with international transportation standards, all limits in this section are given in terms of dual units: The International System of Units (SI) followed or preceded by U.S. standard or customary units. The U.S. customary units are not exact equivalents, but are rounded to a convenient value, providing a functionally equivalent unit. For the purpose of this section, either unit may be used.

(i) "Certificate holder" means a person who has been issued a certificate of compliance or other package approval by the U.S. Nuclear Regulatory Commission.

(ii) "Certificate of Compliance (CoC)" means the certificate issued by the NRC which approves the design of a package for the transportation of radioactive material.

(iii) "Close reflection by water" means immediate contact by water of sufficient thickness for maximum reflection of neutrons.

(iv) "Containment system" means the assembly of components of the packaging intended to retain the radioactive material during transport.

(v) "Criticality Safety Index (CSI)" means the dimensionless number (rounded up to the next tenth) assigned to and placed on the label of a fissile material package, to designate the degree of control of accumulation of packages containing fissile material during transportation. Determination of the criticality safety index is described in 10 CFR §§71.22, 71.23, and 71.59.

(vi) "Deuterium" means, for the purposes of 10 CFR §§71.15 and 71.22, deuterium and any deuterium compounds, including heavy water, in which the ratio of deuterium atoms to hydrogen atoms exceeds 1:5000.

(vii) "Graphite" means, for the purposes of 10 CFR §§71.15 and 71.22, graphite with a boron equivalent content less than 5 parts per million and density greater than 1.5 grams per cubic centimeter.

(viii) "Low toxicity alpha emitters" means natural uranium, depleted uranium, natural thorium; uranium-235, uranium-238, thorium-232, thorium-228 or thorium-230 when contained in ores or physical or chemical concentrates or tailings; or alpha emitters with a half-life of less than 10 days.

(ix) "Maximum normal operating pressure" means the maximum gauge pressure that would develop in the containment system in a period of 1 year under the heat condition specified in 10 CFR 71.71(c)(1), in the absence of venting, external cooling by an ancillary system, or operational controls during transport.

(x) "Natural thorium" means thorium with the naturally occurring distribution of thorium isotopes (essentially 100 weight percent thorium-232).

(xi) "Optimum interspersed hydrogenous moderation" means the presence of hydrogenous material between packages to such an extent that the maximum nuclear reactivity results.

(xii) "Spent nuclear fuel" means fuel that has been withdrawn from a nuclear reactor following irradiation, has undergone at least 1 year's decay since being used as a source of energy in a

power reactor, and has not been chemically separated into its constituent elements by reprocessing. Spent fuel includes the special nuclear material, byproduct material, source material, and other radioactive materials associated with fuel assemblies.

(xiii) "Surface Contaminated Object (SCO)" means a solid object that is not itself classed as radioactive material, but which has radioactive material distributed on any of its surfaces. SCO must be in one of two groups with surface activity not exceeding the following limits:

(A) SCO-1: A solid object on which:

(a) The non-fixed contamination on the accessible surface averaged over 300 cm^2 (or the area of the surface if less than 300 cm^2) does not exceed 4 Bq/cm^2 (10^{-4} microcurie/cm^2) for beta and gamma and low toxicity alpha emitters, or 0.4 Bq/cm^2 (10^{-5} microcurie/cm^2) for all other alpha emitters;

(b) The fixed contamination on the accessible surface averaged over 300 cm^2 (or the area of the surface if less than 300 cm^2) does not exceed 4×10^4 Bq/cm^2 (1.0 microcurie/cm^2) for beta and gamma and low toxicity alpha emitters, or 4×10^3 Bq/cm^2 (0.1 microcurie/cm^2) for all other alpha emitters; and

(c) The non-fixed contamination plus the fixed contamination on the inaccessible surface averaged over 300 cm^2 (or the area of the surface if less than 300 cm^2) does not exceed 4×10^4 Bq/cm^2 (1 microcurie/cm^2) for beta and gamma and low toxicity alpha emitters, or 4×10^3 Bq/cm^2 (0.1 microcurie/cm^2) for all other alpha emitters.

(B) SCO-II: A solid object on which the limits for SCO-I are exceeded and on which:

(a) The non-fixed contamination on the accessible surface averaged over 300 cm^2 (or the area of the surface if less than 300 cm^2) does not exceed 400 Bq/cm^2 (10^{-2} microcurie/cm^2) for beta and gamma and low toxicity alpha emitters or 40 Bq/cm^2 (10^{-3} microcurie/cm^2) for all other alpha emitters;

(b) The fixed contamination on the accessible surface averaged over 300 cm^2 (or the area of the surface if less than 300 cm^2) does not exceed 8×10^5 Bq/cm^2 (20 microcuries/cm^2) for beta and gamma and low toxicity alpha emitters, or 8×10^4 Bq/cm^2 (2 microcuries/cm^2) for all other alpha emitters; and

(c) The non-fixed contamination plus the fixed contamination on the inaccessible surface averaged over 300 cm^2 (or the area of the surface if less than 300 cm^2) does not exceed 8×10^5 Bq/cm^2 (20 microcuries/cm^2) for beta and gamma and low toxicity alpha emitters, or 8×10^4 Bq/cm^2 (2 microcuries/cm^2) for all other alpha emitters.

(xiv) "Unirradiated uranium" means uranium containing not more than 2 x 103 Bq of plutonium per gram of uranium-235, not more than 9 x 106 Bq of fission products per gram of uranium-235, and not more than 5 x 10-3 g of uranium-236 per gram of uranium-235.

(xv) Uranium—natural, depleted, enriched

(A) "Natural uranium" means uranium with the naturally occurring distribution of uranium isotopes (approximately 0.711 weight percent uranium-235, and the remainder by weight essentially uranium-238).

(B) "Depleted uranium" means uranium containing less uranium-235 than the naturally occurring distribution of uranium isotopes.

(C) "Enriched uranium" means uranium containing more uranium-235 than the naturally occurring distribution of uranium isotopes.

(6) *Transportation of licensed material.*

(i) Each licensee who transports licensed material outside the site of usage, as specified in the license or where transport is on public highways, or who delivers licensed material to a carrier for

transport, shall comply with the applicable requirements of the USDOT regulations in 49 CFR Parts 107, 171 through 180 and 390 through 397 appropriate to the mode of transport.

(A) The licensee shall particularly note USDOT regulations in the following areas:

(a) Packaging—49 CFR Part 173; Subparts A and B and I.

(b) Marking and labeling—49 CFR Part 172: Subpart D; and Sections 172.400 through 172.407 and Sections 172.436 through 172.441 of Subpart E.

(c) Placarding—49 CFR Part 172: Subpart F, especially Sections 172.500 through 172.519, 172.556, and Appendices B and C.

(d) Accident reporting—49 CFR Part 171: Sections 171.15 and 171.16.

(e) Shipping papers and emergency information—49 CFR Part 172: Subparts C and G.

(f) Hazardous material employee training—49 CFR Part 172: Subpart H.

(g) Security plans—49 CFR Part 172: subpart I.

(h) Hazardous material shipper/carrier registration—49 CFR Part 107: Subpart G.

(B) The licensee shall also note USDOT regulations pertaining to the following modes of transportation:

(a) Rail—49 CFR Part 174: Subparts A through D and K.

(b) Air—49 CFR Part 175.

(c) Vessel—49 CFR Part 176: Subparts A through F and M.

(d) Public Highway—49 CFR Part 177 and Parts 390 through 397.

(ii) If USDOT regulations are not applicable to a shipment of licensed material, the licensee shall conform to the standards and requirements of the USDOT specified in §175.105(a)(6)(i) to the same extent as if the shipment or transportation were subject to USDOT regulations. A request for modification, waiver, or exemption from those requirements, and any notification referred to in those requirements, must be filed with, or made to, the Director, Office of Nuclear Material Safety and Safeguards, U.S. Nuclear Regulatory Commission, Washington, DC 20555-0001.

(b) *Exemption.* (1) *Exemption of physicians.* Any physician licensed by a State to dispense drugs in the practice of medicine is exempt from §175.105(a)(6) with respect to transport by the physician of licensed material for use in the practice of medicine. However, any physician operating under this exemption must be licensed under applicable sections of this Code, 10 CFR Part 35 or the equivalent Agreement State regulations. Such transport must not be by public modes of transportation including, but not limited to, buses, subways, trams, taxicabs, car services, trains, ferries, or other means which would be returned immediately to public use after transporting licensed material.

(2) *Exemption for low-level materials.*

(i)A licensee is exempt from all requirements of this section with respect to shipment or carriage of the following low-level materials:

(A) Natural material and ores containing naturally occurring radionuclides that are not intended to be processed for use of these radionuclides, provided the activity concentration of the material does not exceed 10 times the values specified in Appendix A, Table A-2 of this section.

(B) Materials for which the activity concentration is not greater than the activity concentration values specified in Appendix A, Table A-2 of this section , or for which the consignment activity is not greater than the limit for an exempt consignment found in Appendix A, Table A-2 of this section.

(3) *Exemption from classification as fissile material.*

(i) Fissile material meeting the requirements of at least one of the paragraphs of this section are exempt from classification as fissile material and from the fissile material package standards of 10 CFR §§71.55 and 71.59, but are subject to all other requirements of this part, except as noted.

(ii) Individual package containing 2 grams or less of fissile material

(iii) Individual or bulk packaging containing 15 grams or less of fissile material provided the package has at least 200 grams of solid nonfissile material for every gram of fissile material. Lead, beryllium, graphite and hydrogenous material enriched in deuterium may be present in the package but must not be included in determining the required mass for solid nonfissile material.

(iv) Low concentrations of solid fissile material commingled with solid nonfissile material provided that:

(A) There is at least 2000 grams of solid nonfissile material for every gram of fissile material, and

(B) There is no more than 180 grams of fissile material distributed within 360 kg of contiguous nonfissile material.

(C) Lead, beryllium, graphite, and hydrogenous material may be present in the package but must not be included in determining the required mass of solid nonfissile material.

(v) Uranium enriched in uranium-235 to a maximum of 1 percent by weight, and with a total plutonium and uranium-233 content of up to 1 percent of the mass of the uranium235, provided that the mass of any beryllium, graphite, and hydrogenous material enriched in deuterium constitutes less than 5 percent of the uranium mass.

(vi) Liquid solutions of uranyl nitrate enriched in uranium-235 to a maximum of 2 percent by mass, with a total plutonium and uranium-233 content not exceeding 0.002 percent of the mass of uranium, and with a minimum nitrogen to uranium atomic ratio (N/U) of 2. The material must be contained in at least a DOT Type A package.

(vii) Packages containing, individually, a total plutonium mass of not more than 1000 grams, of which not more than 20 percent by mass may consist of plutonium-239, plutonium-241, or any combination of these radionuclides.

(c) *General Licenses.* (1) *General license: NRC-approved package.*

(i) A general license is hereby issued to any licensee of the Department to transport, or to deliver to a carrier for transport, licensed material in a package for which a license, certificate of compliance, or other approval has been issued by the NRC.

(ii) This general license applies only to a licensee who—

(A) Has a quality assurance program approved by the Department as satisfying the provisions of §175.105(e) of this Code.

(B) Has a copy of the certificate of compliance, or other approval of the package, and has the drawings and other documents referenced in the approval relating to the use and maintenance of the packaging and to the actions to be taken before shipment;

(C) Complies with the terms and conditions of the license, certificate, or other approval, as applicable, and applicable provisions of the operating controls and procedures requirements of §175.105(d), the quality assurance requirements of §175.105(e), and the general provisions of §175.105(a); and

(D) Submits in writing to the Department, before the licensee's first use of the package, the licensee's name and license number and the package identification number specified in the package approval.

(iii) This general license applies only when the package approval authorizes use of the package under this general license.

(iv) For a Type B or fissile material package, the design of which was approved by NRC before April 1, 1996, the general license is subject to the additional restrictions contained in 10 CFR 71.13.

(2) *Previously approved package.*

(i) A Type B package previously approved by NRC but not designated as B(U) or B(M) in the identification number of the NRC Certificate of Compliance, may be used under the general license of §175.105(c)(1) with the following additional conditions:

(A) Fabrication of the packaging was satisfactorily completed by August 31, 1986, as demonstrated by application of its model number in accordance with §175.105(d)(2)(iii); (B) A package used for a shipment to a location outside the United States is subject to multilateral approval, as defined in USDOT regulations at 49 CFR 173.403; and

(C) A serial number that uniquely identifies each packaging which conforms to the approved design is assigned to, and legibly and durably marked on, the outside of each packaging.

(ii) A Type B(U) package, a Type B(M) package, a low specific activity (LSA) material package or a fissile material package, previously approved by the NRC but without the designation "-85" in the identification number of the NRC Certificate of Compliance, may be used under the general license of §175.105(c)(1) with the following additional conditions:

(A) Fabrication of the package is satisfactorily completed by April 1, 1999 as demonstrated by application of its model number in accordance with §175.105(d)(2)(iii) of this Code;

(B) A package used for a shipment to a location outside the United States is subject to multilateral approval as defined in USDOT regulations at 49 CFR 173.403; and

(C) A serial number which uniquely identifies each packaging which conforms to the approved design is assigned to and legibly and durably marked on the outside of each packaging.

(3) *General license: U.S. Department of Transportation specification container.*

(i) A general license is issued to any licensee of the Department to transport, or to deliver to a carrier for transport, licensed material in a specification container for fissile material or for a Type B quantity of radioactive material as specified in USDOT regulations at 49 CFR Parts 173 and 178.

(ii) This general license applies only to a licensee who has a quality assurance program approved by the Department as satisfying the provisions of §175.105(e) of this Code.

(iii) This general license applies only to a licensee who—

(A) Has a copy of the specification; and

(B) Complies with the terms and conditions of the specification and the applicable provisions of the operating and procedures requirements in §175.105(d), the quality assurance requirements in §175.105(e) and the general provisions contained in §175.105(a).

(iv) This general license is subject to the limitation that the specification container may not be used for a shipment to a location outside the United States, except by multilateral approval, as defined in USDOT regulations at 49 CFR 173.403.

(v) The requirements of §175.105(c)(3) shall expire October 1, 2008.

(4) *General License: Use of foreign approved package.*

(i) A general license is issued to any licensee of the Department to transport, or to deliver to a carrier for transport, licensed material in a package the design of which has been approved in a foreign national competent authority certificate that has been revalidated by USDOT as meeting the applicable requirements of 49 CFR 171.12.

(ii) Except as otherwise provided herein, the general license applies only to a licensee who has a quality assurance program approved by the Department as satisfying the applicable provisions of §175.105(e) of this Code.

(iii) This general license applies only to shipments made to or from locations outside the United States.

(iv) This general license applies only to a licensee who—

(A) Has a copy of the applicable certificate, the revalidation, and the drawings and other documents referenced in the certificate, relating to the use and maintenance of the packaging and to the actions to be taken before shipment; and

(B) Complies with the terms and conditions of the certificate and revalidation, and with the applicable provisions of the operating and procedures requirements in §175.105(d), the quality assurance requirements in §175.105(e) and the general provisions in §175.105(a). With respect to the quality assurance provisions of §175.105(e) of this Code, the licensee is exempt from design, construction, and fabrication consid- erations.

(5) *General License: Fissile Material.*

(i) A general license is issued to any licensee of the Department to transport fissile material, or to deliver fissile material to a carrier for transport, if the material is shipped in accordance with this section. The fissile material need not be contained in a package which meets the standards of-subparts E and F of 10 CFR 71.22; however the material must be contained in a Type A package. The Type A package must also meet the DOT requirements of 49 CFR 173.417(a).

(ii) The general license applies only to a licensee who has a quality assurance program approved by the Department as satisfying the provisions of §175.105(e) of this part

(iii) The general license applies only when a package's contents:

(A) Contain less than a Type A quantity of fissile material; and

(B) Contains less than 500 total grams of beryllium, graphite, or hydrogenous material enriched in deuterium.

(iv) The general license applies only to packages containing fissile material that are labeled with a CSI which:

(A) Has been determined in accordance with section (5) of this section

(B) Has a value less than or equal to 10; and

(C) For a shipment of multiple packages containing fissile material, the sum of the CSIs must be less than or equal to 50 (for shipment on a nonexclusive use conveyance) and less than or equal to 100 (for shipment on an exclusive use conveyance).

(v) (A) The value for the CSI must be greater than or equal to the number calculated by the following equation:

$$\mathrm{CSI} = 10\left[\frac{\text{grams of } {}^{233}\mathrm{U}}{X} + \frac{\text{grams of } {}^{233}\mathrm{U}}{Y} + \frac{\text{grams of Pu}}{Z}\right];$$

(B) The calculated CSI must be rounded up to the first decimal place;

(C) The values of X, Y, and Z used in the CSI equation must be taken from Tables-71.1 or 71.2, as appropriate;

(D) If Table 71-2 is used to obtain the value of X, then the values of the terms in the equation for uranium-233 and plutonium must be assumed to be zero; and,

(E) Table 71-1 values for X, Y, and Z must be used to determine the CSI if:

(a) Uranium-233 is present in the package;

(b) The mass of plutonium exceeds 1 percent of the mass of uranium-235;

(c) The uranium is of unknown uranium-235 enrichment or greater than 24 weight percent enrichment; or

(d) Substances having a moderating effectiveness (i.e., an average hydrogen density greater than H2O) (e.g., certain hydrocarbon oils or plastics) are present in any form, except as polyethylene used for packing or wrapping.

(6) *General license: Plutonium/Beryllium special form material.*

(i) A general license is issued to any licensee of the Department to transport fissile material in the form of plutonium-beryllium (Pu-Be) special form sealed sources, or to deliver Pu-Be sealed sources to a carrier for transport, if the material is shipped in accordance with this section. This material need not be contained in a package which meets the standards of subparts E and F of 10 CFR Part 71; however, the material must be contained in a Type A package. The Type A package must also meet the USDOT requirements of 49 CFR §173.417(a).

(ii) The general license applies only to a licensee who has a quality assurance program approved by the Department as satisfying §175.105(e)(1) of this section.

(iii) The general license applies only when a package's contents:

(A) Contain less than a Type A quantity of material; and

(B) Contain less than 1000 g of plutonium, provided that: plutonium-239, plutonium-241, or any combination of these radionuclides, constitute less than 240 g of the total quantity of plutonium in the package.

(iv) The general license applies only to packages labeled with a CSI which:

(A) Has been determined in accordance with part (v) of this section;

(B) Has a value less than or equal to 100;

(C) For a shipment of multiple packages containing Pu-Be sealed sources, the sum of the CSI must be less than or equal to 50 (for shipment on a nonexclusive use conveyance) and less than or equal to 100 (for shipment on an exclusive use conveyance).

(v) (A) The value for the CSI must be greater than or equal to the number calculated by the following equation:

$$\mathbf{CSI} = 10\left[\frac{\text{grams of } ^{233}\text{U}}{\mathbf{X}} + \frac{\text{grams of } ^{233}\text{U}}{\mathbf{Y}} + \frac{\text{grams of Pu}}{\mathbf{Z}}\right];$$

(B) The calculated CSI must be rounded up to the first decimal place.

(d) *Operating Controls and Procedures.* (1) *Applicability of operating controls and procedures.* A licensee subject to this section, who, under a general or specific license, transports licensed material or delivers licensed material to a carrier for transport, shall comply with the requirements of this subsection, with the quality assurance requirements of §175.105(e), and with the general provisions of §175.105(a) of this Code.

(2) *Preliminary determinations.* Before the first use of any packaging for the shipment of licensed material—

(i) The licensee shall ascertain that there are no cracks, pinholes, uncontrolled voids, or other defects that could significantly reduce the effectiveness of the packaging:

(ii) Where the maximum normal operating pressure will exceed 35 kPa (5 lbf/in^2) gauge, the licensee shall test the containment system at an internal pressure at least 50 percent higher than

the maximum normal operating pressure, to verify the capability of that system to maintain its structural integrity at that pressure; and

(iii) The licensee shall conspicuously and durably mark the packaging with its model number, serial number, gross weight, and a package identification number assigned by the NRC. Before applying the model number, the licensee shall determine that the packaging has been fabricated in accordance with the design approved by the NRC.

(3) *Routine determinations.* Before each shipment of licensed material, the licensee shall ensure that the package with its contents satisfies the applicable requirements of this section and of the license. The licensee shall determine that—

(i) The package is proper for the contents to be shipped;

(ii) The package is in unimpaired physical condition except for superficial defects such as marks or dents;

(iii) Each closure device of the packaging, including any required gasket, is properly installed and secured and free of defects;

(iv) Any system for containing liquid is adequately sealed and has adequate space or other specified provision for expansion of the liquid;

(v) Any pressure relief device is operable and set in accordance with written procedures;

(vi) The package has been loaded and closed in accordance with written procedures;

(vii) Any structural part of the package that could be used to lift or tie down the package during transport is rendered inoperable for that purpose, unless it satisfies the design requirements of 10 CFR 71.45;

(viii) The level of non-fixed (removable) radioactive contamination on the external surfaces of each package offered for shipment is as low as reasonably achievable, and within the limits specified in USDOT regulations in 49 CFR 173.443;

(ix) External radiation levels around the package and around the vehicle, if applicable, will not exceed the limits specified in 10 CFR 71.47 at any time during transportation;

(x) Accessible package surface temperatures will not exceed the limits specified in 10 CFR 71.43(g) at any time during transportation; and

(xi) For fissile material, any moderator or neutron absorber, if required, is present and in proper condition.

(xii) When the isotopic abundance, mass, concentration, degree of irradiation, degree of moderation, or other pertinent property of fissile material in any package is not known, the licensee shall package the fissile material as if the unknown properties have credible values that will cause the maximum neutron multiplication.

(4) *Air transport of plutonium.*

(i) Notwithstanding the provisions of any general licenses and notwithstanding any exemptions stated directly in this section or included indirectly by citation of 49 CFR chapter I, as may be applicable, the licensee shall assure that plutonium in any form, whether for import, export, or domestic shipment, is not transported by air or delivered to a carrier for air transport unless:

(A) The plutonium is contained in a medical device designed for individual human application; or

(B) The plutonium is contained in a material in which the specific activity is less than or equal to the activity concentration values for plutonium specified in Appendix A, Table A-2, of this section and in which the radioactivity is essentially uniformly distributed; or

(C) The plutonium is shipped in a single package containing no more than an A_2 quantity of plutonium in any isotope or form, and is shipped in accordance with §175.105(a)(6); or

(D) The plutonium is shipped in a package specifically authorized for the shipment of plutonium by air in the Certificate of Compliance for that package issued by the NRC.

(ii) Nothing in §175.105(d)(4)(i) is to be interpreted as removing or diminishing the requirements of 10 CFR 73.24

(iii) For a shipment of plutonium by air which is subject to §175.105(d)(4)(i)(D), the licensee shall, through special arrangement with the carrier, require compliance with 49 CFR 175.704, U.S. Department of Transportation regulations applicable to the air transport of plutonium.

(5) *Opening instructions.* Before delivery of a package to a carrier for transport, the licensee shall ensure that any special instructions needed to safely open the package have been sent to, or otherwise made available to, the consignee for the consignee's use in accordance with §175.03(j)(6) of this Code.

(6) *Records.*

(i) Each licensee shall maintain, for a period of 3 years after shipment, a record of each shipment of licensed material not exempt under §175.105(b)(2), showing where applicable—

(A) Identification of the packaging by model number and serial number;

(B) Verification that there are no significant defects in the packaging, as shipped;

(C) Volume and identification of coolant;

(D) Type and quantity of licensed material in each package, and the total quantity of each shipment;

(E) For each item of irradiated fissile material—

(a) Identification by model number and serial number;

(b) Irradiation and decay history to the extent appropriate to demonstrate that its nuclear and thermal characteristics comply with license conditions; and

(c) Any abnormal or unusual condition relevant to radiation safety;

(F) Date of the shipment;

(G) For fissile packages and for Type B packages, any special controls exercised;

(H) Name and address of the transferee;

(I) Address to which the shipment was made; and

(J) Results of the determinations required by §175.105(d)(3) and by the conditions of the package approval.

(ii) The licensee shall make available to the Department for inspection, upon reasonable notice, all records required by this section. Records are only valid if stamped, initialed, or signed and dated by authorized personnel or otherwise authenticated.

(iii) The licensee shall maintain sufficient written records to furnish evidence of the quality of packaging. The records to be maintained include results of the determinations required by §175.105(d)(2); design, fabrication, and assembly records, results of reviews, inspections, tests, and audits; results of monitoring work performance and materials analyses; and results of maintenance, modification and repair activities. Inspection, test, and audit records must identify the inspector or data recorder, the type of observation, the results, the acceptability and the action taken in connection with any deficiencies noted. The records must be retained for 3 years after the life of the packaging to which they apply.

(7) *Inspection and tests.*

(i) The licensee or certificate holder shall permit the Department, at all reasonable times, to inspect the licensed material, packaging, premises, and facilities in which the licensed material or packaging is used, provided, constructed, fabricated, tested, stored, or shipped.

(ii) The licensee shall perform, and permit the Department to perform, any tests the Department deems necessary or appropriate for the administration of the requirements of this section.

(iii) The licensee shall notify the Department at least 45 days before fabrication of a package to be used for the shipment of licensed material having a decay heat load in excess of 5kW or with a maximum normal operating pressure in excess of 103kPa (15 lbf/in^2) gauge.

(8) *Reports.* The licensee shall report to the Department within 30 days—

(i) Any instance in which there is significant reduction in the effectiveness of any approved Type B, or fissile, packaging during use;

(ii) Details of any defects with safety significance in Type B, or fissile, packaging after first use, with the means employed to repair the defects and prevent their recurrence; or

(iii) Instances in which the conditions of approval in the certificate of compliance were not observed in making a shipment.

(9) *Advance notification of shipment of irradiated reactor fuel and nuclear waste.*

(i) As specified in §§175.105(d)(9)(ii), (iii) and (iv), each licensee shall provide advance notification to the governor of a State, or the governor's designee, and the Department, of the shipment of licensed material, through, or across the boundary of the State, before the transport, or delivery to a carrier, for transport, of licensed material outside the confines of the licensee's plant or other place of use or storage.

(ii) Advance notification is required under this subdivision for shipments of irradiated reactor fuel in quantities less than that subject to advance notification requirements of 10 CFR 73.37(f). Advance notification is also required under this subdivision for shipment of licensed material; other than irradiated fuel, meeting the following three conditions:

(A) The licensed material is required by this section to be in Type B packaging for transportation;

(B) The licensed material is being transported to or across a State boundary en route to a disposal facility or to a collection point for transport to a disposal facility; and

(C) The quantity of licensed material in a single package exceeds the least of the following:

(a) 3000 times the A_1 value of the radionuclides as specified in appendix A. Table A-1 for special form radioactive material;

(b) 3000 times the A_2 value of the radionuclides as specified in appendix A. Table A-1 for normal form radioactive material; or

(c) 1000 TBq (27,000 Ci).

(iii) Procedures for submitting advance notification.

(A) The notification must be made in writing to the office of each appropriate governor or governor's designee and to the Department.

(B) A notification delivered by mail must be postmarked at least 7 days before the beginning of the 7-day period during which departure of the shipment is estimated to occur.

(C) A notification delivered by any means other than mail must reach the office of the governor or of the governor's designee and the Department at least 4 days before the beginning of the 7-day period during which departure of the shipment is estimated to occur.

(a) A list of the names and mailing addresses of the governors' designees receiving advance notification of transportation of nuclear waste was published in the Federal Register on June 30, 1995 (60 FR 34306).

(b) The list will be published annually in the Federal Register on or about June 30 to reflect any changes in information.

(c) A list of the names and mailing addresses of the governors' designees is available on request from the Director, Office of State Programs, U.S. Nuclear Regulatory Commission, Washington, DC 20555-0001.

(D) The licensee shall retain a copy of the notification as a record for 3 years.

(iv) Information to be furnished in advance notification of shipment. Each advance notification of shipment of irradiated reactor fuel or nuclear waste must contain the following information:

(A) The name, address, and telephone number of the shipper, carrier, and receiver of the irradiated reactor fuel or nuclear waste shipment;

(B) A description of the irradiated reactor fuel or nuclear waste contained in the shipment, as specified in the regulations of USDOT in 49 CFR 172.202 and 172.203(d);

(C) The point of origin of the shipment and the 7-day period during which departure of the shipment is estimated to occur;

(D) The 7-day period during which arrival of the shipment at State boundaries is estimated to occur;

(E) The destination of the shipment, and the 7-day period during which arrival of the shipment is estimated to occur; and

(F) A point of contact, with a telephone number, for current shipment information.

(v) *Revision notice.* A licensee who finds that schedule information previously furnished to a governor or governor's designee, or the Department, in accordance with this subdivision, will not be met, shall telephone a responsible individual in the office of the governor of the State or of the governor's designee, and the Department, and inform that individual of the extent of the delay beyond the schedule originally reported. The licensee shall maintain a record of the name of the individual contacted for 3 years.

(vi) *Cancellation notice.*

(A) Each licensee who cancels an irradiated reactor fuel or nuclear waste shipment for which advance notification has been sent shall send a cancellation notice to the governor of each State or to the governor's designee previously notified, and to the Department.

(B) The licensee shall state in the notice that it is a cancellation and identify the advance notification that is being canceled. The licensee shall retain a copy of the notice as a record for 3 years.

(e) *Quality Assurance.* (1) *Quality assurance requirements.*

(i) *Purpose.* This subsection describes quality assurance requirements applying to design, purchase, fabrication, handling, shipping, storing, cleaning, assembly, inspection, testing, operation, maintenance, repair, and modification of components of packaging that are important to safety. As used in this subsection, "quality assurance" comprises all those planned and systematic actions necessary to provide adequate confidence that a system or component will perform satisfactorily in service. Quality assurance includes quality control, which comprises those quality assurance actions related to control of the physical characteristics and quality of the material or component to predetermined requirements.

(ii) *Establishment of program.* Each licensee shall establish, maintain, and execute a quality assurance program satisfying each of the applicable criteria of §§175.105(e)(1) through 175.105(e)(19) and satisfying any specific provisions that are applicable to the licensee's activities including procurement of packaging. The licensee shall apply each of the applicable criteria in a graded approach, i.e., to an extent that is consistent with its importance to safety.

(iii) *Approval of program.* Before the use of any package for the shipment of licensed material subject to this subsection each licensee shall obtain Department approval of its quality assurance

program. Each licensee shall file a description of its quality assurance program, including a discussion of which requirements of this subsection are applicable and how they will be satisfied, with the Department.

(iv) Repealed.

(v) Repealed.

(vi) *Previously approved programs.* An NRC-approved quality assurance program that satisfies the applicable criteria of Appendix B of 10 CFR Part 50, and that is established, maintained, and executed with regard to transport packages, will be accepted as satisfying the requirements of §175.105(e)(1)(ii) of this Code. Before first use, the licensee shall notify the NRC and the Department of its intent to apply its previously approved Appendix B program to transportation activities. The licensee shall identify the program by date of submittal to the NRC and date of NRC approval.

(2) *Quality assurance organization.*

(i) The licensee shall be responsible for the establishment and execution of the quality assurance program. The licensee may delegate to others, such as contractors, agents, or consultants, the work of establishing and executing the quality assurance program, or any part of the quality assurance program, but shall retain responsibility for the program. The licensee shall clearly establish and delineate, in writing, the authority and duties of persons and organizations performing activities affecting the safety-related functions of structures, systems, and components. These activities include performing the functions associated with attaining quality objectives and the quality assurance functions.

(ii) The quality assurance functions are—

(A) Assuring that an appropriate quality assurance program is established and effectively executed; and

(B) Verifying, by procedures such as checking, auditing, and inspection, that activities affecting the safety-related functions have been performed correctly.

(iii) The persons and organizations performing quality assurance functions must have sufficient authority and organizational freedom to—

(A) Identify quality problems;

(B) Initiate, recommend, or provide solutions; and

(C) Verify implementation of solutions.

(iv) The persons and organizations performing quality assurance functions shall report to a management level that assures that the required authority and organizational freedom, including sufficient independence from cost and schedule, when opposed to safety considerations, are provided.

(v) Because of the many variables involved, such as the number of personnel, the type of activity being performed, and the location or locations where activities are performed, the organizational structure for executing the quality assurance program may take various forms, provided that the persons and organizations assigned the quality assurance functions have the required authority and organizational freedom.

(vi) Irrespective of the organizational structure, the individual(s) assigned the responsibility for assuring effective execution of any portion of the quality assurance program, at any location where activities subject to this subsection are being performed, must have direct access to the levels of management necessary to perform this function.

(3) *Quality assurance program.*

(i) The licensee shall establish, at the earliest practicable time consistent with the schedule for accomplishing the activities, a quality assurance program that complies with the requirements of §§175.105(e)(1) through 175.105(e)(19). The licensee shall document the quality assurance program by written procedures or instructions and shall carry out the program in accordance with those procedures throughout the period during which the packaging is used. The licensee shall identify the material and components to be covered by the quality assurance program, the major organizations participating in the program, and the designated functions of these organizations.

(ii) The licensee, through its quality assurance program, shall provide control over activities affecting the quality of the identified materials and components to an extent consistent with their importance to safety, and as necessary to assure conformance to the approved design of each individual package used for the shipment of radioactive material. The licensee shall assure that activities affecting quality are accomplished under suitably controlled conditions. Controlled conditions include the use of appropriate equipment; suitable environmental conditions for accomplishing the activity, such as adequate cleanliness; and assurance that all prerequisites for the given activity have been satisfied. The licensee shall take into account the need for special controls, processes, test equipment, tools, and skills to attain the required quality, and the need for verification of quality by inspection and test.

(iii) The licensee shall base the requirements and procedures of its quality assurance program on the following considerations concerning the complexity and proposed use of the package and its components:

(A) The impact of malfunction or failure of the item to safety;

(B) The design and fabrication complexity or uniqueness of the item;

(C) The need for special controls and surveillance over processes and equipment;

(D) The degree to which functional compliance can be demonstrated by inspection or test; and

(E) The quality history and degree of standardization of the item.

(iv) The licensee shall provide for indoctrination and training of personnel performing activities affecting quality, as necessary to assure that suitable proficiency is achieved and maintained. The licensee shall review the status and adequacy of the quality assurance program at established intervals. Management of other organizations participating in the quality assurance program shall review regularly the status and adequacy of that part of the quality assurance program which they are executing.

(4) *Package design control.*

(i) The licensee shall establish measures to assure that applicable requirements and the package design, as specified in the license for those materials and components to which this subdivision applies, are correctly translated into specifications, drawings, procedures, and instructions. These measures must include provisions to assure that appropriate quality standards are specified and included in design documents and that deviations from standards are controlled. Measures must be established for the selection and review for suitability of application of materials, parts, equipment, and processes that are essential to the safety-related functions of the materials, parts, and components of the packaging.

(ii) The licensee shall establish measures for the identification and control of design interfaces and for coordination among participating design organizations. These measures must include the establishment of written procedures, among participating design organizations, for the review, approval, release, distribution, and revision of documents involving design interfaces. The design control measures must provide for verifying or checking the adequacy of design, by methods such as design reviews, alternate or simplified calculational methods, or by a suitable testing program.

For the verifying or checking process, the licensee shall designate individuals or groups other than those who were responsible for the original design, but who may be from the same organization. Where a test program is used to verify the adequacy of a specific design feature in lieu of other verifying or checking processes, the licensee shall include suitable qualification testing of a prototype or sample unit under the most adverse design conditions. The licensee shall apply design control measures to items such as the following:

(A) Criticality physics, radiation shielding, stress, thermal, hydraulic, and accident analyses;

(B) Compatibility of materials;

(C) Accessibility for inservice inspection, maintenance, and repair;

(D) Features to facilitate decontamination; and

(E) Delineation of acceptance criteria for inspections and tests.

(iii) The licensee shall subject design changes, including field changes, to design control measures commensurate with those applied to the original design. Changes in the conditions specified in the package approval require the Department's approval.

(5) *Procurement document control.* The licensee shall establish measures to assure that adequate quality is required in the documents for procurement of material, equipment, and services, whether purchased by the licensee or by its contractors or subcontractors. To the extent necessary, the licensee shall require contractors or subcontractors to provide a quality assurance program consistent with the applicable provisions of this section.

(6) *Instructions, procedures, and drawings.* The licensee shall prescribe activities affecting quality by documented instructions, procedures, or drawings of a type appropriate to the circumstances and shall require that these instructions, procedures, and drawings be followed. The instructions, procedures, and drawings must include appropriate quantitative or qualitative acceptance criteria for determining that important activities have been satisfactorily accomplished.

(7) *Document control.* The licensee shall establish measures to control the issuance of documents such as instructions, procedures, and drawings, including changes, which prescribe all activities affecting quality. These measures must assure that documents, including changes, are reviewed for adequacy, approved for release by authorized personnel, and distributed and used at the location where the prescribed activity is performed. These measures must assure that changes to documents are reviewed and approved.

(8) *Control of purchased material, equipment, and services.*

(i) The licensee shall establish measures to assure that purchased material, equipment, and services, whether purchased directly or through contractors and subcontractors, conform to the procurement documents. These measures must include provisions, as appropriate, for source evaluation and selection, objective evidence of quality furnished by the contractor or subcontractor, inspection at the contractor or subcontractor source, and examination of products on delivery.

(ii) The licensee shall have available documentary evidence that material and equipment conform to the procurement specifications before installation or use of the material and equipment. The licensee shall retain, or have available, this documentary evidence for the life of the package to which it applies. The licensee shall assure that the evidence is sufficient to identify the specific requirements met by the purchased material and equipment.

(iii) The licensee shall assess the effectiveness of the control of quality by contractors and subcontractors at intervals consistent with the importance, complexity, and quantity of the product or services.

(9) *Identification and control of materials, parts, and components.* The licensee shall establish measures for the identification and control of materials, parts, and components. These measures must assure that identification of the item is maintained by heat number, part number, or other appropriate means, either on the item or on records traceable to the item, as required throughout fabrication, installation, and use of the item. These identification and control measures must be designed to prevent the use of incorrect or defective materials, parts, and components.

(10) *Control of special processes.* The licensee shall establish measures to assure that special processes, including welding, heat treating, and nondestructive testing, are controlled and accomplished by qualified personnel using qualified procedures in accordance with applicable codes, standards, specifications, criteria, and other special requirements.

(11) *Internal inspection.* The licensee shall establish and execute a program for inspection of activities affecting quality by or for the organization performing the activity, to verify conformance with the documented instructions, procedures, and drawings for accomplishing the activity. The inspection must be performed by individuals other than those who performed the activity being inspected. Examination, measurements, or tests of material or products processed must be performed for each work operation where necessary to assure quality. If direct inspection of processed material or products is not carried out, indirect control by monitoring processing methods, equipment, and personnel must be provided. Both inspection and process monitoring must be provided when quality control is inadequate without both. If mandatory inspection hold points, which require witnessing or inspecting by the licensee's designated representative and beyond which work should not proceed without the consent of its designated representative, are required, the specific hold points must be indicated in appropriate documents.

(12) *Test control.* The licensee shall establish a test program to assure that all testing required to demonstrate that the packaging components will perform satisfactorily in service is identified and performed in accordance with written test procedures that incorporate the requirements of this section and the requirements and acceptance limits contained in the package approval. The test procedures must include provisions for assuring that all prerequisites for the given test are met, that adequate test instrumentation is available and used, and that the test is performed under suitable environmental conditions. The licensee shall document and evaluate the test results to assure that test requirements have been satisfied.

(13) *Control of measuring and test equipment.* The licensee shall establish measures to assure that tools, gauges, instruments, and other measuring and testing devices used in activities affecting quality are properly controlled, calibrated, and adjusted at specified times to maintain accuracy within necessary limits.

(14) *Handling, storage, and shipping control.* The licensee shall establish measures to control, in accordance with instructions, the handling, storage, shipping, cleaning, and preservation of materials and equipment to be used in packaging to prevent damage or deterioration. When necessary for particular products, special protective environments, such as inert gas atmosphere, and specific moisture content and temperature levels must be specified and provided.

(15) *Inspection, test, and operating status.* (i) The licensee shall establish measures to indicate, by the use of markings such as stamps, tags, labels, routing cards, or other suitable means, the status of inspections and tests performed upon individual items of the packaging. These measures must provide for the identification of items that have satisfactorily passed required inspections and tests, where necessary to preclude inadvertent bypassing of the inspections and tests.

(ii) The licensee shall establish measures to identify the operating status of components of the packaging, such as tagging valves and switches, to prevent inadvertent operation.

(16) *Nonconforming materials, parts, or components.* The licensee shall establish measures to control materials, parts, or components that do not conform to the licensee's requirements to prevent their inadvertent use or installation. These measures must include, as appropriate, procedures for identification, documentation, segregation, disposition, and notification to affected organizations. Nonconforming items must be reviewed and accepted, rejected, repaired, or reworked in accordance with documented procedures.

(17) *Corrective action.* The licensee shall establish measures to assure that conditions adverse to quality, such as deficiencies, deviations, defective material and equipment, and nonconformances, are promptly identified and corrected. In the case of a significant condition adverse to quality, the measures must assure that the cause of the condition is determined and corrective action taken to preclude repetition. The identification of the significant condition adverse to quality, the cause of the condition, and the corrective action taken must be documented and reported to appropriate levels of management.

(18) *Quality assurance records.* The licensee shall maintain sufficient written records to describe the activities affecting quality. The records must include the instructions, procedures, and drawings required by subdivision (6) of this subsection, to prescribe quality assurance activities and must include closely related specifications such as required qualifications of personnel, procedures, and equipment. The records must include the instructions or procedures which establish a records retention program that is consistent with applicable requirements and designates factors such as duration, location, and assigned responsibility. The licensee shall retain these records for 3 years beyond the date when the licensee last engages in the activity for which the quality assurance program was developed. If any portion of the written procedures or instructions is superseded, the licensee shall retain the superseded material for 3 years after it is superseded.

(19) *Audits.* The licensee shall carry out a comprehensive system of planned and periodic audits, to verify compliance with all aspects of the quality assurance program, and to determine the effectiveness of the program. The audits must be performed in accordance with written procedures or checklists by appropriately trained personnel not having direct responsibilities in the areas being audited. Audited results must be documented and reviewed by management having responsibility in the area audited. Follow-up action, including reaudit of deficient areas, must be taken where indicated.

§175.201 Microwave Ovens.

(a) *Applicability.* The provisions of this Code relating to microwave ovens shall apply to such ovens sold, offered for sale, repaired or altered for use in homes, restaurants or other food vending establishments, hospitals or other medical care facilities, schools, and other establishments in the City where the public may be exposed.

(b) *Definitions.* As used in the sections of this Code relating to microwave ovens, the following definitions shall apply:

(1) "Microwave oven" means a device designed to heat, cook or dry food through the application of electromagnetic energy at frequencies assigned by the Federal Communications Commission in the normal industrial, scientific and medical heating bands ranging from 890 megahertz to 6,000 megahertz.

(2) "Cavity" means that portion of the microwave oven in which food may be heated, cooked or dried.

(3) "Door" means the movable barrier which prevents access to the cavity during operation and whose function is to prevent emission of microwave energy from the passage or opening which provides access to the cavity.

(4) "Safety interlock" means a device or system of devices which is intended to prevent generation of microwave energy when access to the cavity is possible.

(5) "Service adjustments or service procedures" means those servicing methods prescribed by the manufacturer for a specific product model.

(6) "Stirrer" means that feature of a microwave oven which is intended to provide uniform heating of the load by constantly changing the standing wave pattern within the cavity or moving the load.

(7) "External surface" means the outside surface of the cabinet or enclosure provided by the manufacturer as part of the microwave oven, including doors, door handles, latches and control knobs.

(c) *Requirements for microwave ovens.* (1) *Power density limit.* The power density of the microwave radiation emitted by a microwave oven shall not exceed 5 milliwatts (mW) per cm^2 at any point 5 cm (2 in.) or more from the external surface of the oven except that a microwave oven offered for sale or sold by its manufacturer shall not have a power density exceeding 1 mW per cm^2 at any point 5 cm (2 in.) or more from the external surface of the oven.

(2) *Measurements and test conditions.* (i) Microwave ovens shall be in compliance with the power density limits if the maximum reading obtained at the location of greatest microwave radiation emission does not exceed the limits specified in this section when the emission is measured through at least one stirrer cycle.

(ii) The emission shall not exceed the requirements of §175.201(c)(1) when the microwave oven is operated at its maximum output and contains a load of 275 15 milliliters of tap water initially at 20.5 degrees Centigrade placed within the cavity at the center of the load-carrying surface provided by the manufacturer. The water container shall be a low form 600 milliliter beaker having an inside diameter of approximately 8.5 cm and made of an electrically non-conductive material such as glass or plastic.

(iii) Measurements shall be made with the door fully closed as well as with the door fixed in any other position which allows the oven to operate.

(3) *Door and safety interlocks.* (i) Microwave ovens manufactured prior to October 6, 1971 shall have one safety interlock.

(ii) Microwave ovens manufactured from October 6, 1971 through November 6, 1976: (A) shall have a minimum of two operative safety interlocks, one of which shall be concealed. A concealed safety interlock on a fully assembled microwave oven must not be operable by any part of the body, or a rod 3 mm or greater in diameter and with a useful length of 10 cm. A magnetically operated interlock is considered to be concealed only if a test magnet, held in place on the oven by gravity or its own attraction, cannot operate the safety interlock. The test magnet shall have a pull at zero air gap of at least 4.5 kg and a pull at 1 cm air gap of at least 450 g when the face of the magnet which is toward the interlock switch when the magnet is in the test position is pulling against one of the large faces of a mild steel armature having dimensions of 80 mm by 50 mm by 8 mm.

(B) The insertion of an object into the oven cavity through any opening while the door is closed shall not cause microwave radiation emission from the oven to exceed the applicable power density limits specified in §175.201(c)(1).

(iii) For microwave ovens manufactured on or after August 4, 1974:

(A) One (the primary) required safety interlock shall prevent microwave radiation emission in excess of the requirement of §175.201(c)(1); the other (secondary) required safety interlock shall prevent microwave radiation emission in excess of 5 mW per cm^2 at any point 5 cm (2 in.) or more from the external surface of the oven. The two required safety interlocks shall be designated as primary or secondary in the service instructions for the oven.

(B) A means of monitoring one or both of the required safety interlocks shall be provided which shall cause the oven to become inoperable and remain so until repaired if the required safety interlock(s) should fail to perform required functions as specified in this section. Interlock failures shall not disrupt the monitoring function.

(iv) Microwave ovens manufactured on and after November 7, 1976:

(A) shall have a minimum of two operative safety interlocks. At least one operative safety interlock on a fully assembled microwave oven shall not be operable by any part of the human body, or any object with a straight insertable length of 10 centimeters. Such interlock must also be concealed, unless its actuation is prevented when access to the interlock is possible. Any visible actuator or device to prevent actuation of this safety interlock must not be removable without disassembly of the oven or its door. A magnetically operated interlock is considered to be concealed, or its actuation is considered to be prevented, only if a test magnet held in place on the oven by gravity or its own attraction cannot operate the safety interlock. The test magnet shall be capable of lifting vertically at zero air gap at least 4.5 kilograms, and at 1 centimeter air gap at least 450 grams when the face of the magnet, which is toward the interlock when the magnet is in test position, is pulling against one of the large faces of a mild steel armature having dimensions of 80 millimeters by 50 millimeters by 8 millimeters.

(B) Microwave radiation emission from such ovens in excess of the limits specified in §175.201(c)(1) shall not be caused by insertion of an insulated wire through any opening in the external surfaces of a fully assembled oven into the cavity, waveguide, or other microwave-energy-containing spaces while the door is closed, provided the wire, when inserted, could consist of two straight segments forming an obtuse angle of not less then 170 degrees.

(v) Failure of any single mechanical or electrical component of the microwave oven shall not cause all safety interlocks to be inoperative.

(vi) Service adjustments or service procedures on the microwave oven shall not cause the safety interlocks to become inoperative or the microwave radiation emission to exceed the power density limits of this section as a result of such service adjustments or procedures.

(4) *Enforcement by the department, notice of repair and installation.* (i) Any microwave oven found deficient in meeting the provisions of §175.201(c) after survey by a Department representative shall be immediately taken out of service until such deficiencies have been corrected. The Bureau of Radiological Health shall be notified within 48 hours of the completion of such repairs.

(ii) Within 48 hours of an installation of a microwave oven in any restaurant or other food vending establishment, hospital or other medical care facility, school, or other establishment in the City where the public may be exposed, a notification of such installation shall be made to the Bureau of Radiological Health.

(e) *User instructions.* (1) For microwave ovens manufactured prior to October 3, 1975 manufacturers thereof shall provide or cause to be provided, with each oven, adequate instructions for its safe use including clear warnings of precautions to be taken to avoid possible exposure to microwave radiation.

(2) For microwave ovens manufactured on or after October 3, 1975 manufacturers thereof shall provide or cause to be provided, with each oven, radiation safety instructions which:

(i) occupy a separate section and are an integral part of the regularly supplied user's manual and cookbook, if supplied separately, and are located so as to elicit the attention of the reader;

(ii) are as legible and durable as other instructions with the title emphasized to elicit the attention of the reader by such means as boldfaced type, contrasting color, a heavy-lined border, or similar means; and

(iii) contain the following wording:

"PRECAUTIONS TO AVOID POSSIBLE EXPOSURE TO
EXCESSIVE MICROWAVE ENERGY

(A) Do not attempt to operate this oven with the door open since open-door operation can result in harmful exposure to microwave energy. It is important not to defeat or tamper with the safety interlocks.

(B) Do not place any object between the oven front face and the door or allow soil or cleaner residue to accumulate on sealing surfaces.

(C) Do not operate the oven if it is damaged. It is particularly important that the oven door close properly and that there is no damage to the:

(a) door (bent);

(b) hinges and latches (broken or loosened);

(c) door seals and sealing surfaces.

(D) The oven should not be adjusted or repaired by anyone except properly qualified service personnel."

(f) *Service instructions.* (1) For microwave ovens manufactured prior to October 3, 1975 manufacturers thereof shall provide or cause to be provided to servicing dealers and distributors and to others upon request, for each oven model, adequate instructions for service adjustment and service procedures including clear warnings of precautions to be taken to avoid possible exposure to microwave radiation.

(2) For microwave ovens manufactured on or after October 3, 1975 manufacturers thereof shall provide or cause to be provided to servicing dealers and distributors and to others upon request, for each oven model, adequate instruction for service adjustments and service procedures, and, in addition, radiation safety instructions which:

(i) occupy a separate section and are an integral part of the regularly supplied service manual and are located so as to elicit the attention of the reader;

(ii) are as legible and durable as other instructions with the title emphasized so as to elicit the attention of the reader by such means as boldfaced type, contrasting color, a heavy-lined border, or by similar means; and

(iii) contain the following wording:

"PRECAUTIONS TO BE OBSERVED BEFORE AND DURING
SERVICING TO AVOID POSSIBLE EXPOSURE TO
EXCESSIVE MICROWAVE ENERGY

(A) Do not operate or allow the oven to be operated with the door open.

(B) Make the following safety checks on all ovens to be serviced before activating the magnetron or other microwave source, and make repairs as necessary:

(a) interlock operation;

(b) proper door closing;

(c) seal and sealing surfaces (arcing, wear, and other damage);

(d) damage to or loosening of hinges and latches;

(e) evidence of dropping or abuse.

(C) Before turning on microwave power for any service test or inspection within the microwave generating compartments, check the magnetron, waveguide or transmission line, and cavity for proper alignment, integrity, and connections.

(D) Any defective or misadjusted components in the interlock monitor, door seal, and microwave generation and transmission systems shall be repaired, replaced, or adjusted before the oven is released to the owner.

(E) A microwave leakage check to verify compliance with the Federal performance standard should be performed on each oven prior to release to the owner."

(iv) Include additional radiation safety precautions or instructions which may be necessary for particular oven designs or models.

(g) *Warning labels on microwave ovens.* (1) Microwave ovens manufactured on or after October 3, 1975 shall have the following warning labels:

(i) A label, permanently attached to or inscribed on the oven, which shall be legible and readily viewable during normal oven use, which shall have the title emphasized and be so located as to elicit the attention of the user, and which shall bear the following warning statement:

"PRECAUTIONS FOR SAFE USE TO AVOID POSSIBLE
EXPOSURE TO EXCESSIVE MICROWAVE ENERGY

DO NOT Attempt to Operate This Oven With:

(A) Object Caught in Door

(B) Door That Does Not Close Properly

(C) Damaged Door, Hinge, Latch, Sealing Surface"

(ii) A label permanently attached to or inscribed on the external surface of the oven which shall be legible and readily viewable during servicing and which shall have the word "CAUTION" emphasized and so located thereon as to elicit the attention of service personnel, and which shall bear the following warning statement:

"CAUTION: This Device is to be Serviced Only by Properly Qualified Service Personnel. Consult the Service Manual for Proper Service Procedures to Assure Continued Compliance with the Federal Performance Standard for Microwave Ovens and for Precautions to be Taken to Avoid Possible Exposure to Excessive Microwave Energy".

(iii) The labels provided in accordance with §175.201(g)(1)(i) and (ii) shall bear only the statements specified therein, except for additional radiation safety warnings or instructions which may be necessary for particular oven designs or models.

(iv) A microwave oven model may be exempted from one or more of the radiation safety warnings specified in §175.201(g)(1)(I) based upon a determination pursuant to the federal Radiation Control for Health and Safety Act of 1968 and the regulations promulgated thereunder

that such model would continue to comply with the standards contained in §175.201(c)(1), (2) and (3) under the adverse condition of use addressed by such precautionary statements.

§175.301 Television receivers and other electronic devices.

(a) No television receiver or other electronic device, whether used in the home or elsewhere, which emits radiation on application of high voltage, shall be offered, transferred or consigned for sale or use in the City of New York unless it is so constructed as to prevent radiation therefrom at a level greater than 1.29 E-7 C-kg^{-1} (0.5 milliroentgens per hour), measured five (5) cm (2 in.) from any accessible surface and averaged over an area of 10 cm^2 (1.55 $in.^2$).

(b) No replacement part shall be offered, transferred or consigned for sale or use in the City of New York which on being installed could cause the assembled unit for which it is intended to exceed the radiation limit allowed under this section.

(c) No person shall alter or adjust any television receiver or other electronic device, whether used in the home or elsewhere, which can emit radiation in such manner as to increase the radiation emission level thereof, unless the level thereby achieved be within the emission limit allowed under this section.