FIRE DEPARTMENT RULES

CODE DEVELOPMENT UNIT
BUREAU OF FIRE PREVENTION

DECEMBER 1, 2016

RULES OF THE
FIRE DEPARTMENT
OF THE CITY OF NEW YORK

**(TITLE 3 OF THE RULES OF
THE CITY OF NEW YORK)**

TABLE OF CONTENTS

CHAPTER 1
ADMINISTRATION

		Page
§101	Reserved	1
§102-01	Pre-Existing Facilities and Conditions	1
§103	Reserved	7
§104-01	Appeals	7
§104-02	Professional Certification of Fire Alarm System Installations	9
§104-03	Disposal of Contraband Materials	11
§105-01	Approval of Fire Alarm System Installations	13
§106-108	Reserved	16
§109-01	Notice of Violation, Certification of Correction and Stipulation Procedures	16
§109-02	Consolidation of Provisions of the Administrative Code for Enforcement Purposes	18
§110-111	Reserved	24
§112-01	Certificates of Approval	24
§113-01	Certificates of Fitness and Certificates of Qualification	28
§113-02	Fire and Life Safety Director Certificate of Fitness	36
§113-03	Reserved	42
§113-04	Accreditation of Training Courses	42
§113-05	Fire and Life Safety Director Training Courses	46
§113-06	Active Shooter and Medical Emergency Preparedness Training Courses	51
§113-07	Refrigerating System Operating Engineer Training Courses	53
§113-08	Commercial Cooking Exhaust Systems Certificates of Fitness	59
§113-09	Non-Production Laboratory Certificates of Fitness	59
§113-10	Construction Site Fire Safety Manager Training Courses	60
§113-11	Construction Site Fire Safety Manager Certificates of Fitness	61
§113-12	Building Operation, Maintenance and Recordkeeping Training Courses	62
§114-01	Certificates of License	64
§115-01	Company Certificates	70
§116-01	Expeditor Registration	79
§117	Reserved	82

CHAPTER 2
DEFINITIONS

§201	Reserved	82
§202-01	Definitions	82

CHAPTER 3
GENERAL PRECAUTIONS AGAINST FIRE

§301-01	Marinas	85
§302	Reserved	86
§303-01	Liquid–Fueled Tar Kettles and Asphalt Melters	86
§304-306	Reserved	86
§307-01	Coke-Fueled Salamanders	86
§308-01	Use of Open Flames in Group A Occupancies and Similar Public Gathering Places	90
§309	Reserved	96
§310-01	Designated Smoking Rooms in Hospitals, Nursing Homes, Rehabilitation Facilities and Similar Medical Facilities Housing the Ill, Aged and Infirm	96
§310-02	Design of “No Smoking” Signs	98
§311-312	Reserved	100
§313-01	Sale of Kerosene Space Heaters	100
§314-01	Indoor Display of Motor Vehicles and Watercraft	100
§315-01	Storage of Flammable Plastic Foam Products	102
§316-324	Reserved	103

CHAPTER 4
EMERGENCY PLANNING AND PREPAREDNESS

§401-402	Reserved	104
§403-01	Fire Safety Precautions at Street Fairs and Similar Outdoor Public Gatherings	104
§403-02	Theater Inspections, Maintenance and Recordkeeping	107
§404-01	Fire Safety and Evacuation Plans	110
§404-02	Office Building Emergency Action Plans	220
§404-03	Fire Safety Requirements for Sidewalk Cafes and Similar Public Gathering Places	241
§405-407	Reserved	243
§408-01	Residential Buildings With Non-Sequential or Non-Standard Floor Numbering	243
§408-02	Residential Fire Safety Guides and Notices	244

CHAPTER 5
FIRE OPERATIONS FEATURES

§501-504	Reserved	264
§505-01	Apartment and Guest Room Identification and Directional Markings and Signs	264
§505-02	Apartment, Guest Room and Stairwell Fire Emergency Markings	267
§506-510	Reserved	283
§511-01	In-Building Auxiliary Radio Communication Systems	283
§512	Reserved	296

CHAPTER 6
BUILDING SERVICES AND SYSTEMS

§601-605	Reserved	296
§606-01	Removal of Lubricating Oil from Ammonia Refrigerating Systems	296
§607-609	Reserved	299

CHAPTER 7
FIRE-RESISTANT RATED CONSTRUCTION

§701-704	Reserved	299

CHAPTER 8
INTERIOR FURNISHINGS, DECORATIONS AND SCENERY

§801-804	Reserved	300
§805-01	Flame-Resistant Decorations	300
§805-02	Flame-Retardant Scenery	304
§806	Reserved	308

CHAPTER 9
FIRE PROTECTION SYSTEMS

§901-01	Central Station Monitoring of Fire Alarm Systems	308
§901-02	Maintenance of Sprinkler System Pressure Tanks	316
§901-03	Reserved	317
§901-04	Buildings Temporarily Occupied as Emergency Shelters	317
§902	Reserved	321
§903-01	Flow Testing of Residential Sprinkler Systems	321
§904-01	Clean Agent Fire Extinguishing Systems Acceptance Testing	324
§905-01	Standpipe System Pressure Reducing Devices	325
§906	Reserved	327
§907-01	Fire Alarm Recordkeeping, Smoke Detector Maintenance, Testing and Recordkeeping, and the Prevention of Unnecessary and Unwarranted Fire Alarms	327

§908-911 Reserved 332
§912-01 Periodic Testing of Standpipe System and Sprinkler Systems With Fire Department Connections 332
§913-914 Reserved 335

CHAPTER 10
MEANS OF EGRESS

§1001-1024 Reserved 335
§1025-01 Fire Escape Window Gates and Similar Security Devices For Secondary Means of Egress and Emergency Escape and Rescue Openings 335
§1026-1027 Reserved 337

CHAPTER 11
RESERVED

CHAPTER 12
DRY CLEANING

§1201-1208 Reserved 338

CHAPTER 13
COMBUSTIBLE DUST-PRODUCING OPERATIONS

§1301-1304 Reserved 338

CHAPTER 14
FIRE SAFETY DURING CONSTRUCTION, ALTERATION AND DEMOLITION

§1401-01 Enforcement of Fire Safety at Construction Sites 338
§1402 Reserved 340
§1403-01 Portable Space Heaters Fueled By Piped Natural Gas at Construction Sites 340
§1404 Reserved 345
§1405-01 Crane Aerial Fueling Operations 345
§1406-1407 Reserved 347
§1408-01 Construction Site Fire Safety Manager 347
§1409-1418 Reserved 349

CHAPTER 15
FLAMMABLE FINISHES

§1501-1511 Reserved 349

CHAPTER 16
FRUIT AND CROP RIPENING

§1601-1607	Reserved	349

CHAPTER 17
FUMIGATION AND INSECTICIDAL FOGGING

§1701-1702	Reserved	349
§1703-01	Fumigation and Insecticidal Fogging	349

CHAPTER 18
SEMICONDUCTOR FABRICATION FACILITIES

§1801-1805	Reserved	351

CHAPTER 19
LUMBER YARDS AND WOOD WASTE MATERIALS

§1901-1909	Reserved	351

CHAPTER 20
MANUFACTURE OF ORGANIC COATINGS

§2001-2009	Reserved	351

CHAPTER 21
INDUSTRIAL FURNACES

§2101-2107	Reserved	351

CHAPTER 22
MOTOR FUEL-DISPENSING FACILITIES AND REPAIR GARAGES

§2201-2203	Reserved	352
§2204-01	Self-Service Automotive Liquid Motor Fuel-Dispensing Facilities	352
§2205-01	Underground Liquid Motor Fuel Storage Tanks at Motor Fuel-Dispensing Facilities	353
§2206-01	Design and Installation of Liquid Motor Fuel-Dispensing Systems at Motor Fuel-Dispensing Facilities	354
§2206-02	Leak Detection System Functionality Testing	356
§2207	Reserved	359
§2208-01	Mobile Compressed Natural Gas Motor Fuel Systems	359
§2208-02	Self-Service Compressed Natural Gas Motor Fuel-Dispensing Facilities	361
§2209-2210	Reserved	362

§2211-01 Repair Garages For Vehicles Fueled by Lighter-Than-Air Fuels 362

CHAPTER 23
HIGH-PILED COMBUSTIBLE STORAGE

§2301-2310 Reserved 363

CHAPTER 24
TENTS AND OTHER MEMBRANE STRUCTURES

§2401-2404 Reserved 363

CHAPTER 25
TIRE REBUILDING AND TIRE STORAGE

§2501-2509 Reserved 363

CHAPTER 26
WELDING AND OTHER HOT WORK

§2601-2603 Reserved 364
§2604-01 Hot Work in Repair Garages 364
§2605-01 Use of Oxygen and a Flammable Gas in Citywide Hot Work Operations 365
§2606-2608 Reserved 366
§2609-01 Piped Natural Gas and Oxygen Consuming Devices and Installations 366

CHAPTER 27
HAZARDOUS MATERIALS – GENERAL PROVISIONS

§2701-2705 Reserved 368
§2706-01 Non-Production Laboratories 368
§2707-01 Transportation of Explosives by Motor Vehicles 368
§2707-02 Transportation by Motor Vehicle of Hazardous Materials in Continuous Transit Through New York City or For Transshipment From New York City 371

CHAPTER 28
AEROSOLS

§2801-2806 Reserved 388

CHAPTER 29
COMBUSTIBLE FIBERS

§2901-2906 Reserved 388

CHAPTER 30
COMPRESSED GASES

§3001-3003	Reserved	388
§3004-01	Carbon Dioxide	388
§3004-02	Anhydrous Ammonia	392
§3005-3008	Reserved	392

CHAPTER 31
CORROSIVE MATERIALS

§3101-3105	Reserved	392

CHAPTER 32
CRYOGENIC FLUIDS

§3201-3206	Reserved	393

CHAPTER 33
RESERVED

CHAPTER 34
FLAMMABLE AND COMBUSTIBLE LIQUIDS

§3401-3403	Reserved	393
§3404-01	Out-of-Service Storage Systems	393
§3404-02	Precision Testing of Certain Underground Storage Systems	395
§3404-03	Indoor and Aboveground Combustible Liquid Storage Systems	398
§3405-01	Storage and Use of Fuel Oil on Mobile Trailers for Heating and Power Generation	401
§3406-01	Storage of Flammable and Combustible Liquids on Roofs at Construction Sites	402

CHAPTER 35
FLAMMABLE GASES

§3501-3507	Reserved	403
§3508-01	Compressed Natural Gas	403
§3509-01	Sanitary Landfill Methane Gas Recovery Facilities	421
§3510	Reserved	429

CHAPTER 36
FLAMMABLE SOLIDS

§3601-3605	Reserved	430

CHAPTER 37
HIGHLY TOXIC AND TOXIC MATERIALS

§3701-3705 Reserved 430

CHAPTER 38
LIQUEFIED PETROLEUM GASES

§3801-3808 Reserved 430
§3809-01 Liquefied Petroleum Gases 430

CHAPTER 39
ORGANIC PEROXIDES

§3901-3906 Reserved 450

CHAPTER 40
OXIDIZERS

§4001-4006 Reserved 450

CHAPTER 41
PYROPHORIC MATERIALS

§4101-4107 Reserved 450

CHAPTER 42
PYROXYLIN PLASTICS

§4201-4205 Reserved 450

CHAPTER 43
UNSTABLE(REACTIVE) MATERIALS

§4301-4306 Reserved 451

CHAPTER 44
WATER-REACTIVE SOLIDS AND LIQUIDS

§4401-4406 Reserved 451

CHAPTER 45
REFERENCED STANDARDS

§4501-4502 Reserved 451

CHAPTER 46
FEES

§4601-01	New and Amended Fees	451
§4602-4603	Reserved	453
§4604-01	Compensation for Operation of Auxiliary Fire Alarm Systems	453

CHAPTER 47
REFERENCED STANDARD MODIFICATIONS

§4701-01	Referenced Standard Modifications and Amendments Thereto	455
§4702-01	National Fire Protection Association Referenced Standards	456

CHAPTER 48
PRE-EXISTING FACILITIES

§4801	Reserved	466
§4802-01	Pre-Existing Definitions	466
§4803-01	General Precautions Against Fire in Pre-Existing Facilities	467
§4804-01	Pre-Existing Emergency Planning and Preparedness	468
§4805-4808	Reserved	472
§4809-01	Fire Protection Systems in Pre-Existing Facilities	472
§4810-01	Means of Egress in Pre-Existing Facilities	484
§4811-4821	Reserved	486
§4822-01	Pre-Existing Motor Fuel-Dispensing Facilities and Repair Garages	486
§4823-4826	Reserved	497
§4827-01	Storage of Hazardous Materials in Pre-Existing Facilities	497
§4828-01	Storage of Aerosols in Pre-Existing Facilities	516
§4829-01	Storage of Combustible Fibers in Pre-Existing Facilities	519
§4830-01	Storage of Compressed Gases in Pre-Existing Facilities	519
§4831-01	Storage of Corrosive Materials in Pre-Existing Facilities	531
§4832-01	Storage of Cryogenic Fluids in Pre-Existing Facilities	532
§4833-01	Storage of Explosives and Special Effects in Pre-Existing Facilities	618
§4834-01	Storage of Flammable and Combustible Liquids in Pre-Existing Facilities	627
§4835-01	Storage of Flammable Gases in Pre-Existing Facilities	662
§4836-4837	Reserved	665
§4838-01	Storage of Liquefied Petroleum Gases in Pre-Existing Facilities	665
§4839-01	Storage of Organic Peroxides in Pre-Existing Facilities	673
§4840-4844	Reserved	674

CHAPTER 49
MISCELLANEOUS

§4900-01	Adjudications	674
§4900-02	Schedule of Charges for Fire Department Ambulance Transport Service	674

RULES OF THE
FIRE DEPARTMENT
OF THE CITY OF NEW YORK

**(TITLE 3 OF THE RULES OF
THE CITY OF NEW YORK)**

CHAPTER 1
ADMINISTRATION

§101	Reserved
§102-01	Pre-Existing Facilities and Conditions
§103	Reserved
§104-01	Appeals
§104-02	Professional Certification of Fire Alarm System Installations
§104-03	Disposal of Contraband Materials
§105-01	Approval of Fire Alarm System Installations
§106-108	Reserved
§109-01	Notice of Violation, Certification of Correction and Stipulation Procedures
§109-02	Consolidation of Provisions of the Administrative Code for Enforcement Purposes
§110-111	Reserved
§112-01	Certificates of Approval
§113-01	Certificates of Fitness and Certificates of Qualification
§113-02	Fire and Life Safety Director Certificate of Fitness
§113-03	Reserved
§113-04	Accreditation of Training Courses
§113-05	Fire and Life Safety Director Training Courses
§113-06	Active Shooter and Medical Emergency Preparedness Training Courses
§113-07	Refrigerating System Operating Engineer Training Courses
§113-08	Commercial Cooking Exhaust Systems Certificates of Fitness
§113-09	Non-Production Laboratory Certificates of Fitness
§113-10	Construction Site Fire Safety Manager Training Courses
§113-11	Construction Site Fire Safety Manager Certificates of Fitness
§113-12	Building Operation, Maintenance and Recordkeeping Training Courses
§114-01	Certificates of License
§115-01	Company Certificates
§116-01	Expeditor Registration
§117	Reserved

§ 101 Reserved

§ 102-01 Pre-Existing Facilities and Conditions

(a) Scope. This section consolidates requirements for *conditions* that were lawfully existing on the effective date of a Fire Code provision, and that, in accordance with FC 102.3 or 102.4, may be continued in compliance with laws, rules, regulations and *permit* conditions applicable at the time such *condition* was lawfully allowed or approved.

(b) Definitions. The following term shall, for the purposes of this section and as used elsewhere in the *rules*, have the meaning shown herein:

Pre-existing (facility or condition). Any condition, including the design and installation of any *facility*, lawfully existing on the effective date of a Fire Code provision that, in accordance with FC 102.3 or 102.4 and this *rule*, may be continued in compliance with laws, rules, regulations and *permit* conditions applicable at the time such *facility* was lawfully allowed or approved, and which is not determined by the *Department* to be subject to the provisions of FC102.5.

(c) Types of Pre-Existing Conditions. The Fire Code was originally enacted effective July 1, 2008. It has been amended since its original enactment. *Pre-existing conditions* include *facilities*:

(1) pre-dating the Fire Code that were lawfully designed and installed in accordance with the New York City Fire Prevention Code and/or other laws, rules, regulations, permit conditions and national standards in effect prior to July 1, 2008; and

(2) lawfully designed and installed in accordance with the applicable provisions of the Fire Code and *rules* in effect on and after July 1, 2008, but which could no longer be designed and installed in the same manner as a result of a subsequent amendment to the Fire Code or *rules* that prohibits, or amends the requirements for, such *facility*.

Pre-existing conditions do not include facilities that were designed under prior laws, rules or repealed or amended Fire Code provisions, if the *facility* is allowed or would be approved under the Fire Code, as subsequently amended.

(d) Illustrative Pre-Existing Conditions. The following facilities illustrate the application of FC 102.3 and FC102.4:

(1) Conditions or facilities approved prior to July 1, 2008 that are pre-existing facilities. Approved facilities lawfully existing on June 30, 2008, may be *pre-existing facilities* under provisions of law that were in effect on that date but repealed effective July 1, 2008, or laws that had been repealed before June 30, 2008, where the *facility* was lawfully continued until that date. For example:

(A) A below-grade storage *facility* for *flammable liquids* lawfully designed and installed in a mercantile establishment prior to July 1, 2008, and that on June 30, 2008 was in compliance with the design and installation requirements for such facilities set forth in Subchapter 9 of the New York City Fire Prevention Code (New York City Administrative Code §27-4066), is a *pre-existing facility* which may be continued in compliance with the provisions of the New York City Fire Prevention Code and the *rules* in effect on June 30, 2008, notwithstanding the fact that such below-grade *facility* would not be allowed or approved in a *control area* under the Fire Code.

(B) A *refrigerating system* that was lawfully designed and installed on a *premises* pursuant to Subchapter 18 of the New York City Fire Prevention Code prior to the enactment of the 1968 *Building Code*, and that had not been required by reason of *alteration* or otherwise to be replaced to comply with the superseding 1968 Building Code or subsequent c*onstruction code* requirements for such systems, may be continued in compliance with the earlier provisions of the New York City Fire Prevention Code, notwithstanding the fact that such *refrigerating system* would not be allowed or approved under the Fire Code.

(C) An *LPG* storage facility that was lawfully designed and installed on a *premises* pursuant to Fire Prevention Directive 2-88, and that had not been required by reason of *alteration* or otherwise to be replaced or discontinued, may be continued in compliance with said directive, notwithstanding the fact that the quantity of LPG storage authorized by said directive exceeds the quantity that would be allowed or approved under the Fire Code.

(2) Conditions or facilities not approved prior to July 1, 2008 that are pre-existing facilities. Any condition or *facility* lawfully existing on July 1, 2008, that had not been regulated under the New York City Fire Prevention Code or New York City Building Code prior to such date, and which are not allowed and could not be approved under the Fire Code or the *rules*, may be a *pre-existing condition* or *facility* within the meaning of this section, if:

(A) prior to June 30, 2008 or other effective date of the applicable Fire Code provision, the condition or *facility* was in compliance with the requirements of any applicable Federal, New York State or other laws, rules or regulations; and

(B) at the time the condition or *facility* was established, it was substantially in compliance with national or industry standards or practices.

(3) Conditions or facilities lawfully existing prior to July 1, 2008 that were not pre-existing facilities but become pre-existing facilities as a result of subsequent

Fire Code amendments. Any condition or *facility* which was lawfully existing on June 30, 2008, and which was allowed or approved under the Fire Code may become a *pre-existing facility* by a Fire Code amendment or rule that no longer allows or authorizes approval of the condition or *facility*. For example:

(A) An existing underground *liquid motor fuel* storage tank designed and installed after April 2000 pursuant to provisions of Subchapters 8, 9 and 11 of the New York City Fire Prevention Code and former 3 RCNY §21-20 that are substantively identical to the provisions of the Fire Code and the *rules*, was not a *pre-existing facility* within the meaning of former FC 102.3 and this section and was required to comply with the applicable provisions of the Fire Code and the *rules*. However, effective March 30, 2014, the Fire Code's design and installation requirements for underground *liquid motor fuel storage and dispensing systems* were amended. As a result, an underground *liquid motor fuel* storage tank designed and installed in accordance with these former Fire Prevention Code and *rule* provisions would not be allowed or approved under the Fire Code. Accordingly, such an underground *liquid motor fuel* storage tank, which was not previously a *pre-existing facility*, became a *pre-existing facility* pursuant to FC 102.3 and 102.4 on March 30, 2014, provided that, on March 29, 2014, its design and installation remained in compliance with the design and installation requirements under which it was originally approved or allowed.

(4) Conditions or facilities designed or installed under the Fire Code (on or after July 1, 2008) that are pre-existing facilities. Any condition or *facility* designed and installed on or after July 1, 2008, pursuant to provisions of the Fire Code, or which was not regulated by the Fire Code between July 1, 2008 and the date of a Fire Code amendment, may be a *pre-existing facility* if the condition or *facility* was lawfully existing on the day prior to the effective date of an amendment of the Fire Code. For example:

(A) A fire apparatus access road dead end turnaround designed and installed in compliance with the Fire Code requirements for such turnarounds in effect prior to March 30, 2014 (as set forth in former FC503.2.5), and lawfully continued until March 29, 2014, is a *pre-existing facility* that may be continued in compliance with the laws, rules, regulations and *permit* conditions applicable at the time such turnaround was lawfully allowed or approved, notwithstanding the fact that the turnaround would not be allowed or approved under the amended Fire Code, which increased the required size of the turnaround.

(B) A below-grade paint spray booth designed and installed in compliance with the Fire Code requirements for paint spray booths in effect prior to March 30, 2014 (as set forth in former FC1504), and lawfully continued until March 30, 2014, is a *pre-existing facility* which may be continued in

compliance with the laws, rules, regulations and *permit* conditions applicable at the time such paint spray booth was lawfully allowed or approved, notwithstanding the fact that such below-grade paint spray booth would not be allowed or approved under the amended Fire Code, which prohibited below-grade paint spray booths.

(e) Consolidation of Provisions of Law Applicable to Pre-Existing Facilities and Conditions. Provisions of the New York City Fire Prevention Code and the *rules* in effect prior to the enactment of the Fire Code effective July 1, 2008, and provisions of the Fire Code and the rules in effect prior to the amendment of the Fire Code effective March 30, 2014, including requirements governing the design and installation of *pre-existing facilities*, and the manufacturing, storage, *handling* and use of materials in *pre-existing facilities* under conditions that would not be allowed or *approved* under the Fire Code, are consolidated in Chapter 48 of the *rules*, as follows:

(1) The third and fourth characters of the number of each section of Chapter 48 of the *rules* correlate to the Fire Code chapter with that number. For example, R4809-01 refers to *pre-existing* fire protection systems, which are governed by FC Chapter 9. The provisions of law consolidated in each such section are those applicable to *pre-existing* facilities and conditions relating to a material or *facility* governed by that Fire Code chapter.

(2) The provisions of law consolidated in each such section have been abridged to delete operational and maintenance requirements, or design and installation requirements that are allowed or approved under the Fire Code, as to which compliance with the Fire Code is required. Deletions are indicated by asterisks (***).

(3) Any amendments to the provisions of law consolidated in each such section are indicated by underlining, and, if terms defined in the Fire Code or *rules* are used, by *italics*.

(f) Other Provisions of Law Applicable to Pre-Existing Facilities and Conditions. *Pre-existing facilities* and conditions shall comply with all applicable laws, rules and regulations, including provisions of law not consolidated in Chapter 48 of the *rules*.

(g) Projects In Progress

(1) Approved facilities completed prior to January 1, 2010. The design and installation of a *facility*, the construction of which was completed and/or approved for use or occupancy by the *Department of Buildings* on or after July 1, 2008, and which would not be allowed and could not be approved under the applicable provisions of the Fire Code and the *rules*, shall be deemed a *pre-existing facility* under the following circumstances and subject to the following conditions:

(A) The design of the *facility* shall have been approved by the *Department of Buildings* and a work permit issued by that agency for the construction thereof prior to July 1, 2008;

(B) The design of the *facility* to be constructed was in compliance with all applicable provisions of the *Fire Prevention Code* and Fire Department rules in effect at the time such work permit was issued; and

(C) Construction of the *facility* is completed and its use and occupancy approved prior to January 1, 2010.

(2) Approved facilities completed prior to January 1, 2011. The design and installation of a *facility* otherwise eligible to be deemed a *pre-existing facility* pursuant to R102-01(g)(1), except that construction of the *facility* will not be completed, and/or its use and occupancy will not be approved, prior to January 1, 2010, shall be deemed a *pre-existing facility* under the following circumstances and subject to the following conditions:

(A) A showing satisfactory to the *Department* that compliance with the applicable provisions of the Fire Code and *rules* would be an undue hardship; and

(B) Compliance with *approved* measures to ameliorate the fire safety concerns arising from non-compliance with the Fire Code and *rule* design requirements constituting the undue hardship; and

(C) Construction of the *facility* is completed and its use and occupancy approved prior to January 1, 2011, except that such deadline may be extended by modification upon a satisfactory showing that construction could not be reasonably completed by such date, and the construction continues to be authorized under the work permit issued by the *Department of Buildings.*

(3) Approved facilities completed prior to September 30, 2015. The design and installation of a *facility*, the construction of which was completed and/or approved for use or occupancy by the *Department of Buildings* on or after March 30, 2014, and which would not be allowed and could not be approved under the applicable provisions of the Fire Code and the *rules*, shall be deemed a *pre-existing facility* under the following circumstances and subject to the following conditions:

(A) The design of the *facility* shall have been approved by the *Department of Buildings* and a work permit issued by that agency for the construction thereof prior to March 30, 2014;

(B) The design of the *facility* to be constructed was in compliance with all applicable provisions of the Fire Code and Fire Department rules in effect at the time such work permit was issued; and

(C) Construction of the *facility* is completed and its use and occupancy approved prior to September 30, 2015.

(4) Approved facilities completed prior to September 30, 2016. The design and installation of a *facility* otherwise eligible to be deemed a *pre-existing facility* pursuant to R102-01(g)(3), except that construction of the *facility* will not be completed, and/or its use and occupancy will not be approved, prior to September 30, 2016, shall be deemed a *pre-existing facility* under the following circumstances and subject to the following conditions:

(A) A showing satisfactory to the *Department* that compliance with the applicable provisions of the Fire Code and *rules* would be an undue hardship; and

(B) Compliance with *approved* measures to ameliorate the fire safety concerns arising from non-compliance with the Fire Code and *rule* design requirements constituting the undue hardship; and

(C) Construction of the *facility* is completed and its use and occupancy approved prior to September 30, 2016, except that such deadline may be extended by modification upon a satisfactory showing that construction could not be reasonably completed by such date, and the construction continues to be authorized under the work permit issued by the *Department of Buildings.*

§ 103 Reserved

§ 104-01 Appeals

(a) Scope. This section sets forth procedures by which any person aggrieved by the issuance of any notice, order, violation or other determination issued by the *Department* may appeal therefrom and obtain a final agency determination as to the validity thereof insofar as it relates to the interpretation or modification of the Fire Code, the *rules*, or other law, rule or regulation enforced by the *Department*.

(b) General Provisions

(1) Appeals. Any person to whom the *Department* has issued a notice, order, violation or other determination pursuant to the provisions of the Fire Code, the

rules, or other law, rule or regulation enforced by the *Department*, and who is aggrieved thereby, may obtain review of such notice, order, violation or other determination and a final agency determination relative to the interpretation or modification of such laws, rules or regulations, in accordance with the procedures set forth in this section. No appeal may be had from an appeal determination or other determination denominated as a final agency determination.

(2) Relationship with adjudications. Nothing contained in this section shall be construed to affect the adjudication of any notice of violation returnable before *ECB*, or a summons returnable before the New York City Criminal Court, except a summons issued for failure to comply with a violation order or other *Commissioner's* order. Nothing contained in this section shall be construed to affect the adjudication of any other notice, order, violation or other determination issued by the *Department*, except insofar as a final agency determination as to the interpretation or modification of the code may be required for such adjudication.

(c) Appeal Procedures

(1) Time for appeal. Appeals shall be filed with the *Department* no later than thirty (30) calendar days from the date of issuance of such notice, order, violation or other determination. The *Department* may extend such time upon a satisfactory showing that the party aggrieved by the determination appealed from did not receive timely notice of the determination, or other good cause shown.

(2) Submission. The appeal shall be directed to the *Department*'s Chief of Fire Prevention, with a copy to the *Department*'s Bureau of Legal Affairs, except that if the notice, order, violation or determination appealed from was issued by the Chief of Fire Prevention, the appeal shall be directed to the Fire Commissioner, with a copy to the *Department*'s Bureau of Legal Affairs.

(3) Form and content. The appeal shall be made in writing in such form as may be prescribed by the *Department*; state with particularity the objections taken; and support such objections by relevant citation to the Fire Code or other law, rule, regulation or legal authority, and submission of relevant documentation or other evidence. Any additional information or other supplemental submission requested by the *Department* shall be submitted to the *Department* within twenty (20) days of the date of the request, or within such other time as may be prescribed by the *Department*.

(4) Appeal determination. The *Department* shall render a written determination on the appeal, granting or denying the appeal, in whole or in part, and stating its reasons therefor.

(d) Stay of Enforcement

(1) No automatic stay. The filing of an appeal shall not stay the enforcement of the notice, order, violation or other determination appealed from, nor shall it relieve any person affected by such determination of the obligation of complying with its requirements or appearing for any adjudication or other legal proceeding.

(2) Request for stay. The person submitting an appeal may at any time request a stay of enforcement of such notice, order, violation or other determination. Such request shall be made in writing and shall be submitted in the manner set forth in R104-01(c).

(3) Stay determination. The *Department* shall expeditiously render a written determination of such request, giving due consideration to the interests of public safety, the costs of compliance, and the apparent merits of the appeal. If the request for a stay is denied, the *Department* shall render its determination on the appeal no later than thirty (30) days from the date of such denial.

§ 104-02 Professional Certification of Fire Alarm System Installations

(a) Scope. This section sets forth the standards, requirements and procedures for the *professional certification* of the design and installation of *fire alarm systems*.

(b) Definitions. The following terms shall, for purposes of this section and as used elsewhere in the *rules*, have the meanings shown herein:

Core building system. *Fire alarm system* devices and equipment in and around the central or main building stairwells, elevators and utility risers of any buildings, except buildings classified in *Occupancy Group R-3*. A fire alarm system includes the fire command center (commonly referred to as a fire command station), fire pump, main sprinkler water flow switch, main sprinkler valve tamper switch, elevator lobby smoke detectors, central station connections, elevator in readiness operation, and core alarm boxes, warden phones and other fire alarm communications devices. Such *fire alarm systems* are also commonly referred to as the "base" building system.

Letter of approval. The written determination of the *Department* that a *fire alarm system* installation has been installed and is operating in compliance with the *Building Code*, *Electrical Code* and Fire Code requirements for such installation enforced by the *Department*.

Professional certification. The submission to the *Department* of a signed, personal verification by a *registered design professional* that accompanies an *application* and/or *design and installation documents* filed with the *Department* and attests that such *application* or *design and installation documents* do not contain any false information

and that such *application* or *design and installation documents* are in compliance with all applicable laws, rules and regulations.

(c) General Provisions

(1) Professional certification of fire alarm system installations. *Fire alarm system* installations may be *professionally certified*, as set forth in FC104.2.1, in accordance with the provisions thereof and this section, in buildings for which a *letter of approval* has been issued for the *core building system*. A *core building system* may not be *professionally certified*.

(2) Qualifications. Only *registered design professionals* may *professionally certify* that *fire alarm system* installations are in compliance with the Fire Code, *Building Code*, applicable provisions of *Department* and *Department of Buildings* rules, and other applicable laws, rules and regulations.

(3) Format of design and installation documents. *Design and installation documents* and related submissions shall be in the format set forth in R105-01(b)(4) or as otherwise designated by the *Department*.

(4) Letter of approval. *Letters of approval* for *fire alarm system* installations that have been *professionally certified* will indicate that the *fire alarm system* installation, or part thereof, was approved by the *Department* based upon *professional certification* pursuant to FC104.2.1.

(5) Audit. All *fire alarm system* installations that have been *professionally certified* are subject to audit.

(6) Disqualification for false certification. Pursuant to FC104.2.1.1, in addition to the penalties for violating provisions of the applicable laws, rules and regulations, *registered design professionals* who submit false or fraudulent documents certifying compliance with the requirements of the Fire Code and *rules* may be disqualified from submission of *professionally certified* applications under the Fire Code.

(d) Submission and Approval Procedure

(1) Submission of professional certification. A completed Fire Department fire alarm professional certification form for any *fire alarm system* installation, or part thereof, that is being *professionally certified* in lieu of a *Department* inspection in accordance with the provisions of FC104.2.1 and R104-02, shall be submitted to the *Department*, together with the submissions required by R105-01(c)(2)(A)(2), (3) and (4), including the *design and installation documents* approved for the installation; "as-built" *design and installation documents* of the *fire alarm system* installation and the facility in which it is installed, as actually constructed; and the applicable fee for review of such an *application*. Such submission shall be made

at the earliest date following the completion of such installation, but in all cases prior to occupancy of any building, or part thereof, that is to be newly occupied or reoccupied.

(2) Acceptance and issuance of letter of approval. *Professionally certified design and installation documents* will be accepted for filing, and a *letter of approval* issued. The *Department* may review such *professionally certified design and installation documents* for completeness and/or other purposes, and if it determines they are deficient, may deny or rescind acceptance and issuance of the *letter of approval*.

(3) Filing with Department of Buildings. The "as built" *design and installation documents* submitted to and accepted by the *Department* will be electronically filed with the *Department of Buildings* by the *Department* as part of the applicant's *Department of Buildings* application, unless another manner of filing such documents with the *Department of Buildings* is prescribed by the *Department*.

§ 104-03 Disposal of Contraband Materials

(a) Scope

(1) This section sets forth standards, requirements and procedures for the destruction or other disposition of any article, device, or equipment, the manufacture, storage, *handling*, use transportation, possession or sale of which is prohibited by the Fire Code or the *rules*, or which is manufactured, stored, *handled*, used, transported, possessed or sold in violation thereof.

(2) Nothing in this section shall be construed to define or limit the *Department*'s discretion to seize contraband materials, or to define or limit the *Department*'s discretion to arrange for the removal of contraband materials, by their *owner* or other person lawfully entitled to their possession, from the *premises* or location where such contraband materials are found.

(b) Definitions. The following terms shall, for purposes of this section and as used elsewhere in the *rules*, have the meanings shown herein:

Notice of disposal. A written notice advising *owners* of contraband material or other interested parties of the final opportunity to reclaim such material.

Notice of seizure. A written notice advising the *owner* of contraband material of its seizure and of the procedures for reclaiming it.

(c) Opportunity to Reclaim Contraband Material. Except as otherwise provided in R104-03(c)(1) and (2), the *Department* will afford any *owner* of contraband material, or

other person lawfully entitled to its possession, an opportunity to reclaim such material, provided that it is reclaimed in accordance with the procedures set forth in this section.

(1) Non-reclaimable contraband. The following contraband material may not be reclaimed, and shall not be subject to the procedures set forth in R104-03(d):

(A) Contraband materials whose condition presents an imminent hazard to life, health or property. This includes a material that has a serious defect, damage or deformity, that has leaked or is leaking its contents, or that cannot be safely stored.

(B) Contraband materials whose immediate disposal is necessary to prevent or abate an emergency situation, such as a *fire*,

(C) Contraband materials that may not be lawfully possessed by the *owner* or other person seeking to reclaim the material.

(2) Contraband materials held as evidence. Notwithstanding any other provision of this section, the *Department* will not release contraband material held as evidence until such time as the use of such material is no longer required in accordance with applicable law.

(d) Procedures for Disposal of Contraband Material. Contraband material shall be disposed of in accordance with the procedures set forth in this subdivision.

(1) Notice of opportunity to reclaim. The *Department* shall give notice of the seizure and anticipated disposal of the contraband material and of the opportunity to reclaim to the *owner* and other interested parties at the time of the seizure, as follows:

(A) A *notice of seizure* shall be given to the person in possession of the contraband material at the time of its seizure, or to the person in control of the *premises* from which the contraband material is seized.

(B) If the identity of an *owner* of the contraband material is clearly marked on or is clearly ascertainable from the contraband material, and it is different from that of the recipient of any notice given pursuant to R104-03(d)(1)(A), a copy of the *notice of seizure* shall be mailed to such *owner*.

(2) Notice of disposal. If the contraband material is not reclaimed within two weeks of the date of seizure, the *Department* shall publish a *notice of disposal* in the City Record. The *notice of disposal* shall identify the material by size, contents, serial number or other identifying mark, and date and place of seizure, and shall set forth a deadline for reclaiming the contraband material not less than ten calendar

days from the date the notice is published. A copy of such *notice of disposal* shall be mailed to any person or organization who arranges with the *Department* to receive such notice.

(3) Failure to timely reclaim. *Owners* and other persons lawfully entitled to possession of a contraband material who fail to timely reclaim the contraband material shall be deemed to have abandoned any right, title or interest they may have in the contraband material, and to have no objection to the *Department*'s disposal of the contraband material in such manner as the *Department* deems appropriate.

(4) Location for reclaiming. *Owners* reclaiming contraband material shall retrieve such material from the *Department*'s storage facility or other place designated by the *Department* for such retrieval.

(5) Qualifications of persons handling and transporting. Contraband materials reclaimed by their *owners* shall be handled and transported only by persons possessing the requisite qualifications (such as a *certificate of fitness)* where such qualifications are required by law or rule, and shall be transported only in *motor vehicles* that comply with federal, state and city rules and regulations.

(6) Indemnification. An *owner* reclaiming contraband material shall provide a sworn affidavit representing that he or she owns or is lawfully entitled to possession of the material and will indemnify The City of New York, its agencies, officials, employees and agents, from any and all claims, suits, damages and expenses arising from claims of ownership to the reclaimed materials.

(7) Fees. The fee for removal and storage of contraband material shall be as set forth in FC A04.1(6). No removal or storage fee shall be charged where it is determined by the *Department* or a court of competent jurisdiction that the contraband material had not been unlawfully manufactured, stored, *handled*, used, transported, possessed or sold.

(e) Department Disposal of Contraband Materials. The *Department* may dispose of contraband materials which are not reclaimed in accordance with the procedures set forth in R104-02(d) in such manner as the *Department* deems appropriate, including but not limited to removal by a contract vendor retained by the *Department* for this purpose.

§ 105-01 Approval of Fire Alarm System Installations

(a) Scope. This section sets forth the standards, requirements and procedures for the submission of *design and installation documents* for *fire alarm system* installations for *Department* review and approval.

(b) General Provisions

(1) Submission and approval required. Pursuant to FC907.1.1, *design and installation documents* for *fire alarm system* installations, containing such details as may be required by the Fire Code, *Building Code*, *Electrical Code* and this section, shall be submitted for *Department* review and approval prior to system installation.

(2) Certification of design and installation documents. Pursuant to FC105.4.1, *design and installation documents* must be prepared by a *registered design professional*. Such documents shall bear the seal of such design professional, which shall serve to certify that the documents are in compliance with applicable provisions of the Fire Code, *Building Code*, *rules*, and other applicable laws, rules and regulations.

(3) Filings upon completion of installation. Upon completion of a *fire alarm system* installation that comprises any part of a *core building system*, the *owner* shall submit a request for inspection pursuant to R105-01(c)(2). Upon completion of a *fire alarm system* installation that does not comprise part of a *core building system*, the *owner* shall submit such a request or a *professional certification* of the installation.

(4) Format of design and installation documents. The *design and installation documents* required by this section shall be formatted (to scale) either to the standard size of 24 inches by 36 inches in dimension, or to the folio size of 11 inches by 17 inches in dimension, as specified in this section, or in such other format as may be designated by the *Department*. The *Department* may require, pursuant to FC105.4, submission of *design and installation documents* and related submissions, in an electronic format designated by the *Department*.

(c) Submission and Approval Procedure

(1) Submission and approval of design and installation documents

(A) Submissions. Applications for approval of *fire alarm systems* shall first be filed with the *Department of Buildings*, and a *Department of Buildings* application number obtained. Thereafter, two (2) sets of engineering drawings complying with the requirements of *Building Code* Section BC907.1.1 and bearing the *Department of Buildings* application number¸ shall be submitted to the *Department*, by filing them at the *Bureau of Fire Prevention's* plan intake window, together with a copy of all forms filed in connection with the *Department of Buildings application*, and a *Department design and installation document* examination *application* form. One set of the engineering drawings shall be formatted to standard (24 x36) size and one to folio (11 x17) size.

(B) Approval. The *Department* will review the *design and installation documents* submitted pursuant to R105-01(c)(1)(A), and, if determined to

be in compliance with the requirements of the laws, rules and regulations enforced by the *Department*, stamp such documents approved.

(C) Retention of approved engineering drawings. The *Department* will retain an electronic copy of the *approved* engineering drawings in folio (11 x 17) size, and return both sets of *approved* original engineering drawings to the applicant. The applicant shall retain the *approved* original engineering drawings, and make the standard (24 x 36) size set available to the *Department* representative at the time of inspection pursuant to R105-01(c)(3)(A).

(2) Department inspection filing

(A) Submissions. *Applications* for *Department* inspection of a *fire alarm system* installation shall include the following documentation and such other information and documentation as the *Department* may require:

(*1)* the *Department*'s "request for inspection" application form;

(2) "as built" *design and installation documents* of the *fire alarm system* installation, and the facility in which it is installed, as actually constructed, formatted in folio (11 x 17) size, and containing:

(*a*) the information required by *Building Code* Section 907.1; and

(*b*) the Input/Output programming matrix and written certification required by R105-01(c)(2)(A)(*3)* and (*4*).

If such "as built" *design and installation documents* cannot be filed at the time of submission of the request for inspection because installation work has not been completed, such "as built" documents may be submitted thereafter but no later than the date of inspection of the installation, either by filing them at the *Bureau of Fire Prevention*'s plan intake window or by providing them to the Department representative at the time of inspection of the installation.

(*3*) a completed Input/Output programming matrix that defines the sequence of operation, as set forth in Annex A to Section A.10.6.2.3(9) of NFPA Standard 72; and

(*4*) a written statement from a *registered design professional*, a person holding a license to engage in the business of installing, servicing and maintaining fire alarm systems issued by the New York Secretary of State pursuant to Article 6-D of the New York State

General Business Law, or a master electrician licensed by the *Department of Buildings* and registered with the New York Secretary of State in accordance with such Article 6-D, certifying that a functional test has been conducted of the *fire alarm system* and the system operates as designed and in accordance with the Input/Output programming matrix. If such functional test cannot be conducted at the time of submission of the request for inspection because installation work has not been completed, such written certification may be submitted to the *Department* in accordance with R105-01(c)(2)(A)(*2)*.

(B) Acceptance. The *Department* will review such *application* for inspection and supporting documentation for completeness and/or other purposes, and if satisfactory, will authorize an inspection.

(3) Inspection and approval of fire alarm system installation

(A) Availability of documents. The standard (24 x36) size approved original engineering drawings of the *fire alarm system* installation, pursuant to R105-01(c)(1)(C), and a set of "as built" *design and installation documents* of the installation, pursuant to R105-01(c)(2)(A)(*2)*, shall be made available for inspection by the *Department* representative at the time of inspection of the *fire alarm system* installation.

(B) Filing with Department of Buildings. The "as built" *design and installation documents* submitted to and accepted by the *Department* will be electronically filed with the *Department of Buildings* by the *Department* as part of the applicant's *Department of Buildings* application, unless another manner of filing such documents with the *Department of Buildings* is prescribed by the *Department*.

§ 106-108 Reserved

§ 109-01 Notice of Violation, Certification of Correction and Stipulation Procedures

(a) Scope. This section sets forth procedures for the certification of correction and adjudication of violations issued by the *Department* and returnable before the New York City Environmental Control Board.

(b) Definitions. The following terms shall, for the purposes of this section and as used elsewhere in the *rules*, have the meanings shown herein:

ECB. The New York City Environmental Control Board.

Notice of violation. A form used for purposes of enforcing the Fire Code, the *rules*, or other law, rule or regulation enforced by the *Department*, that serves to notify the respondent named therein of a violation of such laws, rules or regulations, orders correction of same, commences an *ECB* proceeding, and sets forth information relating to such violation and *ECB* proceeding.

(c) Certification of Correction of Violations

(1) All notices of violation, except those that charge failure to certify correction, false certification and violation of a *Commissioner*'s order (other than the order to certify correction), shall include an order requiring the respondent to correct the conditions constituting the violations, and to file a certification with the *Department* that the conditions have been corrected.

(2) The required certification shall be made on the certificate of correction form accompanying the notice of violation issued by the *Department* representative. The certificate of correction shall be completed and signed by the respondent in accordance with the instructions set forth thereon, and shall be notarized by a notary public or commissioner of deeds. The respondent shall submit with the certificate of correction all documentation necessary and appropriate to demonstrate correction of the violations.

(3) The signed and notarized certificate of correction shall be directed to:

Administrative Enforcement Unit
Bureau of Legal Affairs
New York City Fire Department
9 MetroTech Center
Brooklyn, NY 11201-3857

(4) The certificate of correction must be received by the Administrative Enforcement Unit of the Bureau of Legal Affairs no later than the close of business on the 35th calendar day from the date of offense set forth on the notice of violation. Both the date of offense and the date for certification of correction are indicated on the face of the violation.

(5) The filing of a certificate of correction in accordance with this section constitutes an admission to the offense charged and results in a finding of liability, but respondents cited for one (1) or more first offenses who, for each such condition, timely correct and file a certificate of correction that is accepted by the *Department*, are not required to appear for an *ECB* hearing and avoid the imposition of a penalty on such violation.

(6) When more than one (1) violation of a law, rule or regulation is cited on the same notice of violation, the respondent may certify correction as to one (1) or more of

such violations. However, respondent must appear for an *ECB* hearing, as set forth on the notice of violation, if certification of correction is not filed and accepted by the *Department* for all of the violations cited on the notice of violation.

(7) The *Department* will review all certificates of correction and determine whether to accept them as satisfactory certification of correction. The *Department* will notify each respondent as to whether the certificate has been accepted, and, if it has not been accepted, advise the respondent of the deficiencies in the certification and the actions and/or proof required to correct the violations.

(d) Acceptance of Compliance Stipulations in ECB Adjudications

(1) If the respondent admits to the violation but requires additional time to comply beyond the date indicated on the notice of violation, the respondent may request a stipulation for compliance purposes.

(2) The *Department* may agree to offer a stipulation to extend the time for correction, upon such terms and conditions as the *Department* determines to be reasonable.

(3) The stipulation shall not be valid unless and until approved by the *ECB* hearing officer or other authorized *ECB* representative.

§ 109-02 Consolidation of Administrative Code Provisions For Enforcement Purposes

(a) Scope. This section establishes violation categories for the purpose of enforcing the provisions of the New York City Fire Code (FC) (Title 29 of the Administrative Code); Title 15 of the Administrative Code (Fire Prevention and Control); the New York City Construction Codes (Title 28 of the Administrative Code); the *rules* promulgated by the Department and codified in Title 3 of the Rules of the City of New York (3 RCNY); and/or other laws, *rules* and regulations enforced by the *Department*. These violation categories will be cited by *Department* personnel in connection with the issuance of notices of violations returnable before the New York City Environmental Control Board, in lieu of citation to a particular code or *rule* section.

(b) Violation Categories. The following violation categories are established for the aforementioned enforcement purposes:

Violation Category 1: Portable Fire Extinguishers and Fire Hoses

Failure to provide and/or maintain required portable fire extinguishers, fire hoses or other portable fire extinguishing devices, in violation of FC 303.5; 307.4; 307.5; 309.4; 309.7; 315.3; 317.5; 319.6; 603.3; 609.6; 901.4; 906.1; 906.2; 906.3; 1105.2; 1105.3; 1105.4; 1105.5; 1105.6; 1107.7; 1110.6; 1208.4; 1407.3; 1415.1; 1417.3; 1418.1; 1504.4; 1504.5;

1505.5; 1506.4; 1510.1; 1908.8; 1909.5; 2003.5; 2106.3; 2205.5; 2208.7; 2210.6; 2211.6; 2306.10; 2404.12; 2404.13; 2508.2; 2604.2; 2707.9; 2903.6; 2906.6; 3309.9; 3403.2; 3404.3; 3405.4; 3406.2; 3406.4; 3406.8; 3506.5; and 3808.2; Administrative Code section 28-103.1; and/or such other Fire Code, Administrative Code, or *rule* sections as provide therefor.

Violation Category 2: Combustible Waste Containers

Failure to provide a required container for *combustible waste* and/or store *combustible waste* in a required container, in violation of FC 304.3; 310.6; 1404.2; 1503.4; 1509.3; 2204.1; 2210.5; 2211.2; 2903.1; and 4204.1; and/or such other Fire Code, Administrative Code, or *rule* sections as provide therefor.

Violation Category 3: Permits

Failure to obtain, renew or otherwise possess a *Department permit* required for any material, operation or *facility* regulated by the Fire Code, in violation of FC105.6; and/or such other Fire Code, Administrative Code, or *rule* sections as provide therefor.

Violation Category 4: Unlawful Quantity or Location of Regulated Material

Manufacturing, storing, *handling*, using, transporting, selling or possessing *hazardous materials*, combustible materials, or other materials regulated by the Fire Code in an amount in excess of the quantity authorized by *Department permit* and/or the quantity or location restrictions for such materials set forth in the Fire Code or the *rules*, in violation of FC 105.1; 303.7; 309.1; 313.3; 315.5; 1206.2; 1206.3; 1406.3; 1406.4; 1406.5; 2210.2; 2306; 2307; 2308; 2703.1; 2703.11; 2706.6; 2806.2; 2806.3; 2806.4; 2806.5; 2904; 2905; 3404.3; 3404.4; 3405.3; 3504.1; 3504.2; 3508.3; 3805.3; 3809.12; and 4204.1; and/or such other Fire Code, Administrative Code, or *rule* sections as provide therefor.

Violation Category 5: Recordkeeping

Failure to maintain and/or produce required recordkeeping, including records of inspections, tests, servicing, fire watch, emergency preparedness drills and other operations and maintenance, in violation of FC 105.3; 107.2; 107.7; 311.5; 317.5; 401.3.6.1 (incorporating by reference former FC 405.5); 401.4; 401.5; 401.7; 401.8; 604.3; 606.1; 606.14; 609.7; 901.6; 901.7; 901.9; 904.11; 906.2; 907.20; 909.1; 909.2; 910.2; 1106.5; 1201.4; 1205.4; 1408.1; 2201.10; 2204.3; 2204.4; 2206.2; 2208.1; 2208.2; 2209.1; 2210.3; 2603.5; 2604.3; 2707.5; 3008.8; 3303.2; and 3307.16; and/or such other Fire Code or *rule* sections as provide therefor.

Violation Category 6: Signs, Postings, Notices and Instructions

Failure to provide and/or maintain required signs, postings, notices, and/or instructions, in violation of FC 105.3; 310.3; 310.5; 316.2; 401.2; 401.3.6.1 (incorporating by reference former FC 408.8; 408.9; 408.11; 408.14); 401.6; 405.5; 406.2; 410.4; 501.4;

503.2; 504.4; 505.2; 505.5; 510.1; 605.3; 606.7; 607.2; 608.7; 609.3; 703.2; 903.5; 904.3; 904.8; 904.10; 904.11; 906.6; 907.19; 912.4; 1027.7; 1103.2; 1105.7; 1106.3; 1204.2; 1205.1; 1404.1; 1405.4; 1406.2; 1409.1; 1418.1; 1503.2; 1507.4; 1510.6; 1607.1; 1703.3; 2107.1; 2204.1; 2204.2; 2205.4; 2208.1; 2208.8; 2209.1; 2210.5; 2210.6; 2211.8; 2305.3; 2404.6; 2603.6; 2609.3; 2609.5; 2703.5; 2703.6; 2703.7; 2703.11; 2704.3; 2906.5; 2906.6; 3003.2; 3008.8; 3304.6; 3307.3; 3307.13; 3403.5; 3404.2; 3404.3; 3405.4; 3406.2; 3406.4; 3406.8; 3503.1; 3705.3; 3807.2; 3903.3; 4003.3; 4006.2; 4006.6 and 4303.3; Administrative Code sections 28-103.1 and 15-127(c)(3); and/or such other Fire Code, Administrative Code, or *rule* sections as provide therefor.

Violation Category 7: Labels and Markings

Failure to provide and/or maintain a required and/or approved label, or other marking, in violation of FC 112.3; 309.1; 313.5; 504.4; 505.1; 505.3; 505.4; 510.4; 512.4; 603.6; 605.7; 609.3; 803.1; 803.2; 1403.1; 1406.2; 1606.1; 2107.2; 2206.7; 2208.2; 2211.5; 2211.8; 2404.2; 2703.5; 2703.7; 2803.2; 3003.2; 3203.4; 3403.5; 3404.2; 3404.3; 3405.4; 3406.4; and 3704.2; Administrative Code section 28-103.1; and/or such other Fire Code, Administrative Code, or *rule* sections as provide therefor.

Violation Category 8: Storage, Accumulation and Removal of Combustible Material and Waste

Storage of combustible material, failure to timely remove *combustible waste* from the *premises*, and/or allowing the accumulation of *combustible waste* and/or vegetation upon a *premises*, in violation of FC 304.1; 304.2; 307.5; 311.3; 311.5; 315; 317.5; 318.3; 319.3; 606.10; 1027.3; 1027.4; 1103.3; 1106.4; 1205.1; 1404.2; 1405.3; 1605.1; 2210.5; 2404.5; 2503.3; 2604.1; 2604.3; 2609.4; 2703.12; 2704.11; 2705.3; 2903.1; 3003.5; 3204.3; 3304.7; 3404.4; 3406.2; 3504.2; 3604.3; 3807.3; 4203.2; and 4204.1; Administrative Code Section 28-103.1; and/or such other Fire Code, Administrative Code, or *rule* sections as provide therefor.

Violation Category 9: Rooftop Access and Means of Egress

Failure to provide required rooftop access to, or required *means of egress* from, any *premises* or part thereof, free from obstructions or impediments, including unobstructed passage across the building parapet, unobstructed landing areas, and unobstructed clear paths, and *overcrowding* by reason of the presence of persons in locations that obstruct or impede egress, and/or failure to maintain rooftop access or *means of egress*, in violation of FC 315.2; 504; 801.6; 1001.2; 1027; 1411.1; 1411.2; 1504.3; 2404.4; 2404.18; 2804.3; 3003.3; 3404.3; 3406.4; 3506.3; 3809.4; and 4203.3; Administrative Code section 28-103.1; and/or such other Fire Code, Administrative Code, or *rule* sections as provide therefor.

Violation Category 10: Overcrowding

Failure to limit the number of persons in a *premises* or any part thereof, in violation of FC 107.6; 202; 403.2; and 1027.3; Administrative Code section 28-103.1; and/or such other Fire Code, Administrative Code, or *rule* sections as provide therefor.

Violation Category 11: General Maintenance

Failure to maintain devices, equipment, systems, *facilities* or *premises*, or part thereof, in good working order (except as otherwise provided in Violation Categories 6 and 7), in clean condition, or in compliance with other general maintenance or housekeeping requirements, in violation of FC 107.1; 304.1; 609; 1027.6; 1303.2; 1405.3; 2211.2; and 3304.8; Administrative Code section 28-103.1; and/or such other Fire Code, Administrative Code, or *rule* sections as provide therefor.

Violation Category 12: Fire Protection Systems

Failure to provide and/or maintain *fire protection systems*, including *sprinkler systems* and other *fire extinguishing systems*, *standpipe systems*, fire pumps, *fire alarm systems*, and/or other devices, and equipment associated with *fire protection systems*, or to prevent *unnecessary alarms* and *unwarranted alarms*, in violation of FC 901.6; 901.7; 901.9; 903.5; 903.6; 904.5; 904.6; 904.7; 904.8; 904.9; 904.10; 904.12; 904.13; 905.12; 907.20; 908.10; 909.1; 909.2; 910.2; 912.6; 913.5; 914.2; and 3406.4; Administrative Code section 28-103.1; and/or such other Fire Code, Administrative Code, or *rule* sections as provide therefor.

Violation Category 13: Flame-Resistant Materials

Failure to provide and/or maintain *flame-resistant materials*, in violation of FC 306.3; 805; 2404.2; and 2706.11; Administrative Code section 28-103.1; and/or such other Fire Code, Administrative Code, or *rule* sections as provide therefor.

Violation Category 14: Fire-Rated Doors and Windows

Failure to provide, protect and/or maintain a required door or window, including fire-rated doors, self-closing doors, access doors, or fire-rated glass, in violation of FC 703.2; 703.4; 2306.6; 2604.1; and 2804.6; Administrative Code section 28-103.1; and/or such other Fire Code, Administrative Code, or *rule* sections as provide therefor.

Violation Category 15: Fire-Rated Construction

Failure to provide and/or maintain required fire-rated construction, including walls and other partitions, in violation of FC 311.2; 311.5; 315.2; 703.1; 1404.8; 1803.14; 2306.3; 2604.1; 2706.6; 2904; and 3006.2; Administrative Code section 28-103.1; and/or such other Fire Code, Administrative Code, or *rule* sections as provide therefor.

Violation Category 16: Ventilation

Failure to provide and/or maintain required and/or approved natural or mechanical ventilation, including required devices, equipment or systems, in violation of FC 309.1; 309.3; 608.6; 609; 904.11; 1204.2; 1205.2; 1205.3; 1405.2; 1504.2; 1504.3; 1504.4; 1504.5; 1505.3; 1505.4; 1506.3; 1507.3; 1509.2; 1510.5; 1803.14; 2005.5; 2211.4; 2211.7; 3006.2; 3007.2; 3008.5; 3404; 3405; 3406; 3506.3; and 3803.2; Administrative Code section 28-103.1; and/or such other Fire Code, Administrative Code, or *rule* sections as provide therefor.

Violation Category 17: Certificates of Fitness and Certificates of Qualification

Failure to obtain and/or produce a *certificate of fitness* and/or *certificate of qualification* for the supervision and/or operation of materials, operations and/or *facilities*, in violation of FC 303.4; 306.2; 307.6; 313.5; 317.3; 401.3; 401.3.6.1 (incorporating by reference former FC 401.6; 401.7; 403.1); 401.4; 401.5; 403.1; 404.3; 405.3; 405.4; 407.2; 407.3; 601.4; 603.1; 606.1; 609.4; 801.7; 901.6; 901.7; 905.1; 914.3; 1110.6; 1201.4; 1403.6; 1404.5; 1406.2; 1408.1; 1418.1; 1501.4; 1701.4; 2201.7; 2201.8; 2211.1; 2404.20; 2603.4; 2604.2; 2706.4; 2707.7; 2801.3; 2906.4; 2906.8; 3001.4; 3101.4; 3201.4; 3301.5; 3401.6; 3406.2; 3406.4; 3501.4; 3510.3; 3601.4; 3701.5; 3801.5; 3901.5; 4001.4; 4101.5; 4201.5; 4301.5; and 4401.5; Administrative Code section 28-103.1; and/or such other Fire Code, Administrative Code, or *rule* sections as provide therefor.

Violation Category 18: Certificates of Approval, Certificates of License and Company Certificates

Failure to obtain and/or produce a *certificate of approval*, *certificate of license* or company certificate, in violation of FC 801.8; 901.4; 901.6; 1025.5; 1501.5; 1701.4; 2201.9; 2601.7; 3301.5; 3401.8; and 3507.3; and/or such other Fire Code, Administrative Code, or *rule* sections as provide therefor.

Violation Category 19: Affidavits, Design and Installation Documents and Other Documentation

Failure to prepare, produce, file with the *Department* and/or submit for Department approval affidavits, applications, certifications, *design and installation documents* and/or other required documentation, in violation of FC 105.2; 105.3; 105.4; 407.4; 2703.4; and 3406.4; Administrative Code section 28-103.1; and/or such other Fire Code, Administrative Code, or *rule* sections as provide therefor.

Violation Category 20: Inspection and Testing

Failure to conduct a required initial or periodic inspection or test of any device, equipment, system, *facility* or *premises*, in violation of FC 105.4; 508.4; 508.5; 511.2; 604.4; 606.6; 903.5; 903.6; 904.1; 904.11; 905.12; 912.6; 913.5; 1106.19; 1107.6; 2206.9; 3403.6; 3404.2; and 3406.4; Administrative Code section 28-103.1; and/or such other Fire Code, Administrative Code, or *rule* sections as provide therefor.

Violation Category 21: Portable Containers

Failure to provide or use a required *container*, in violation of FC 2204.1; 2210.3; 3003.1; 3203.1; 3404.3; 3405.2; and 3406.2; and/or such other Fire Code, Administrative Code, or *rule* sections as provide therefor.

Violation Category 22: Stationary Tanks

Failure to provide a required *stationary tank* storage system, including aboveground or underground flammable or combustible liquid storage tank systems, and devices and equipment associated with such systems, in violation of FC 1207.3; 2009.2; 2206.2; and 3404; Administrative Code section 28-103.1; and/or such other Fire Code, Administrative Code, or *rule* sections as provide therefor.

Violation Category 23: Storage Facilities

Failure to provide a required storage facility, including storage cabinets, enclosures, rooms or vaults, in violation of FC 609.2; 1406.3; 1406.4; 2703.8; 2706.8; 2904; 3003.5; 3104; 3404.3; 3504; 3604; 3703; 3809; 3904; 4004; 4104; 4204; 4304; and 4404; and/or such other Fire Code, Administrative Code, or *rule* sections as provide therefor.

Violation Category 24: Storage of Hazardous Materials and Commodities

Failure to provide required racks and shelf storage, and/or failure to store *hazardous materials*, *commodities* or other goods in an approved manner, in violation of FC 2307; 2308; and 3404.3; and/or such other Fire Code, Administrative Code, or *rule* sections as provide therefor.

Violation Category 25: Electrical Hazards

Failure to provide and/or maintain required electrical devices and/or equipment (except as otherwise provided in Violation Category 27 for electrical lighting hazards), and/or allow electrical hazards to exist, in any *facility* or *premises*, in violation of FC 603.1; 604.1; 605; 606.15; 804.3; 904.3; 1106.3; 1106.5; 1204.2; 1404.7; 1503.2; 1504.4; 1504.5; 1505.7; 1506.4; 1510.3; 1604.2; 1703.2; 2004; 2005.6; 2201.5; 2204.1; 2208.1; 2208.8; 2209.2; 2211.3; 2211.8; 2606; 2703.8; 2704.7; 2705.1; 3003.6; 3008.5; 3203.6; 3403.1; 3405.3; 3406.5; 3406.8; 3504.2; 3704.2; 3809.14; 3904.1; and 3904.2; and/or such other Fire Code, Administrative Code, or *rule* sections as provide therefor.

Violation Category 26: Heating and Refrigerating Equipment and Systems

Failure to provide and/or maintain required heating and/or *refrigerating systems* and/or devices and equipment associated with such equipment or systems, in violation of FC 313.6; 315.2; 603.5; 605.10; 606.5; 606.8; 606.9; 606.11; 606.12; 908.6; 1204.2; 1303.1; 1403.5 1503.2; 1504.3; 2005.6; 2201.6; 2210.2; 2404.15; 3304.6; 3405.3; 3406.4; and

4204.4; Administrative Code section 28-103.1; and/or such other Fire Code, Administrative Code, or *rule* sections as provide therefor.

Violation Category 27: Electrical Lighting Hazards

Failure to provide and/or maintain required lighting devices or equipment and/or protection therefor, in violation of FC 605.2; 605.9; 605.11; 1504.3; 1604.4; 2404.9; 2705.1; 3203.10; and 4203.4; Administrative Code section 28-103.1; and/or such other Fire Code, Administrative Code, or *rule* sections as provide therefor.

Violation Category 28: Open Fires, Open Flames and Sparks

Causing or allowing an *open fire, open flame* or sparking device or equipment to be built, kindled, lit, maintained, operated or used, and/or failure to provide protection therefor, in violation of FC 307.1; 307.5; 307.6; 308; 309.1; 309.5; 309.6; 317.2; 319.3; 804.3; 1104.6; 1106.10; 1303.1; 1404.3; 1503.2; 1606.2; 1703.2; 2003.6; 2005.6; 2204.1; 2208.1; 2210.5; 2504.1; 2604; 2605.5; 2703.7; 2904.6; 3304.7; and 3309.11; and/or such other Fire Code, Administrative Code, or *rule* sections as provide therefor.

Violation Category 29: Designated Handling and Use Rooms or Areas

Failure to provide a required room or area for *handling* and/or use of materials, operations or other activity regulated by the Fire Code, in violation of FC 310.2; 1504.2; 1504.5; 2601.3; 2705; 3105.1; 3405.3; 3505.1; 3605.1; 3703; 3905.1; 4005.1; 4105.1; 4204.1; 4305.1; and 4405.1; and/or such other Fire Code, Administrative Code, or *rule* sections as provide therefor.

Violation Category 30: Emergency Planning and Preparedness

Failure to comply with emergency planning and preparedness requirements (except as otherwise provided in Violation Categories 5, 6 and 17), in violation of FC Chapter 4, including 401.3.6.1 (incorporating by reference former FC 404); and/or such other Fire Code, Administrative Code, or *rule* sections as provide therefor.

§ 110-111 Reserved

§ 112-01 Certificates of Approval

(a) Scope. This section sets forth standards, requirements and procedures for the issuance of *certificates of approval* for articles, equipment and devices required by the Fire Code to be of a type for which such certificate has been issued.

(b) General Provisions

(1) Certificate of approval required. The following articles, equipment and devices are required to be of a type for which a *certificate of approval* has been issued:

(A) Flame-retardant chemicals and treatments, as set forth in FC801.8.

(B) Bars, grills, grates or similar devices placed over emergency escape and rescue openings, and openings onto fire escapes, as set forth in FC1025.5.

(C) Pre-engineered non-water *fire extinguishing systems*, including foam *fire extinguishing systems*, as set forth in FC901.4.5(1).

(D) Prefabricated hoods and grease filters installed in connection with *commercial cooking systems*, as set forth in FC901.4.5(2).

(E) Fire Department connections, *standpipe system* hose outlets and pressure reducing valves, as set forth in FC901.4.5(3).

(F) *Fire alarm system* control panels, as set forth in FC901.4.5(4).

(G) Pre-manufactured spray rooms and pre-manufactured spray booths, as set forth in FC 1504.1.1.2 and 1504.1.2.6, respectively.

(H) Ventilated metal lockers used for the storage of *liquefied petroleum gases*, as set forth in this section.

(2) Revocation of New York City Board of Standards and Appeal Approvals. Articles, equipment and devices regulated by the Fire Code as to which there was a New York City Board of Standards and Appeals approval in effect on July 1, 2008, may continue to be installed and used, provided that such article, equipment or device is installed and used in compliance with the Fire Code and the *rules*, except as follows:

(A) Flameproofing chemicals. Approvals for all flameproofing chemicals given by the New York City Board of Standards and Appeals were revoked on January 1, 2001.

(B) Fire escape window gates. Approvals of all bars, grilles, grates or similar devices designed to be placed over openings onto fire escapes that were given by the New York City Board of Standards and Appeals are revoked as of the effective date of this section, except that *pre-existing installations* may continue to be used in compliance with the requirements of R102-01 and the operational and maintenance requirements of R1025-01.

(c) General Application Requirements. Applicants for a *certificate of approval* shall submit all information and documentation necessary or appropriate to establish their eligibility for issuance of such certificate in accordance with FC112 and this section.

(1) Application forms and information. Information relating to *certificates of approval* and *application* procedures, including *application* forms, may be obtained from the *Department*'s web site, www.nyc.gov/fdny, and from the Technology Management Unit of the *Bureau of Fire Prevention*, Fire Department Headquarters, 9 MetroTech Center, 1st Floor, Brooklyn, NY 11201-3857.

(2) Submission. *Applications* for *certificates of approval* shall be made by a principal or officer of the manufacturer of the article, equipment or device for which such certificate is sought, or other person or company authorized to represent the manufacturer. Original and renewal *applications* may be filed with the *Department* in person or by mail, together with the non-refundable *application* fee.

(3) Abandoned applications. An *application* for a *certificate of approval* shall be deemed to have been abandoned six (6) months after the date of filing, unless such *application* has been diligently prosecuted or a *certificate of approval* has been issued. The *Department* may, in its discretion, grant one (1) or more extensions of time for additional periods not exceeding 90 days each, if there is good cause.

(4) Original applications. *Applications* for *certificates of approval* shall include the following information and documentation, and such other information and documentation as the *Department* may require:

(A) the corporate and trade names of the manufacturer of the article, equipment and device, its principal address and any New York City address, and contact information;

(B) the name and contact information of the manufacturer's authorized representative, if any;

(C) a detailed description of the design and the intended installation and/or use of the article, equipment or device; and

(D) the report of a nationally recognized testing laboratory or other *approved* organization approving the *listing* of the article, equipment or device, if such *listing* is required.

(5) Examination, demonstration and testing. The *Department* will notify the applicant if examination, demonstration or further testing of the article, equipment or device will be required.

(6) Renewal applications. An *application* for renewal of a *certificate of approval* shall disclose any changes in the design or intended installation and/or use of the article, equipment or device, and the following information and documentation:

(A) Evidence demonstrating that the article, equipment or device complies with the requirements of all applicable Fire Code and *rule* provisions enacted or adopted after the date of approval of the original *application* or prior renewal.

(B) Where required as a condition of approval, evidence that the article, equipment or device has a current *listing*.

(7) Conditions of approval. An original or renewal *application* will not be granted and a *certificate of approval* will not be issued unless the applicant acknowledges and accepts the conditions of approval. Such acknowledgement and acceptance shall be in the form of an affidavit or other form prescribed by the *Department*.

(8) Appeals. Any applicant aggrieved by a determination rendered upon an *application* for a *certificate of approval* may appeal such determination in accordance with the provisions of R104-01.

(d) Special Application Requirements. In addition to the general *application* requirements set forth in R112-01(c), *applications* for the following *certificates of approval* shall include the following information and documentation:

(1) Flame-retardant chemicals and treatments. *Applications* for a *certificate of approval* for flame-retardant chemicals and treatments shall include the following information and documentation:

(A) a copy of the Material Safety Data Sheet for the flame-retardant chemical;

(B) a report approving the *listing* of the flame-resistance chemicals and treatments that certifies that such chemicals and treatments have passed either Test 1 or Test 2 of NFPA 701. Such report shall indicate the flame-retardant chemicals tested, the manner in which they were applied, the materials to which they were applied, and such other information or documentation as the *Department* may require to demonstrate the flame-resistance imparted by such chemicals and treatments; and

(C) an affidavit, executed by a principal or officer of the applicant, setting forth the following information:

(*1*) the chemical's trade name;

(*2*) the types of material that may be satisfactorily treated with the chemical;

(*3*) the required or recommended manner in which such chemical shall be applied;

(*4*) the period of time that the flame-resistant chemical will impart flame resistance to the material; and

(*5*) a certification as to the effect, if any, that normal handling of the decoration (including washing, dry cleaning, ironing and sewing), will have on the effectiveness of the *flame-resistant material*.

(2) Fire escapes and emergency escape and rescue openings window gates. *Applications* for a *certificate of approval* for a window gate for a fire escape or *emergency escape and rescue opening*, or similar device, shall demonstrate to the satisfaction of the *Department* that such device complies the requirements of R1025-01.

(e) Revocation. *A certificate of approval* shall be automatically revoked upon the happening of any of the following events:

(1) the article, equipment or device cannot be installed or used in compliance with the Fire Code or the *rules*;

(2) change of ownership or corporate name;

(3) change in manufacturing process;

(4) change of product name;

(5) change of product model number;

(6) change in design;

(7) change in testing laboratory listing (including amendment or approval conditions, or revocation); or

(8) noncompliance with any of the original conditions of acceptance as specified in the *certificate of approval*.

§ 113-01 Certificates of Fitness and Certificates of Qualification

(a) Scope. This section sets forth general standards, requirements and procedures for issuance of *certificates of fitness* and *certificates of qualification*.

(b) General Provisions

(1) Minimum qualifications and general requirements. Applicants for *certificates of fitness* and *certificates of qualification* shall meet the minimum qualifications and comply with the general requirements set forth in FC113 and this section. Holders of certificates of fitness and certificates of qualification shall maintain all qualifications and comply with all requirements throughout the term of the certificate.

(A) Applicants for *certificates of fitness* for *FLS* director shall additionally comply with the requirements set forth in R113-02.

(B) Applicants for *certificates of fitness* to inspect and clean commercial cooking exhaust systems shall additionally comply with the requirements set forth in R113-08.

(C) Applicants for *certificates of fitness* for construction site fire safety manager shall additionally comply with the requirements set forth in R113-11.

(2) Change of address or work location. All applicants and certificate holders are required to promptly notify the *Department* of any change in the applicant's or certificate holder's residence address, any change in work location when such location is required for and/or indicated on such certificate, and such other information as the *Department* may require.

(c) General Application Requirements. Applicants for a *certificate of fitness* or *certificate of qualification* shall submit all information and documentation necessary or appropriate to establish their eligibility for issuance of such a certificate in accordance with FC113, the *rules* and the applicable notice of examination.

(1) Application forms and information. Information relating to certificate requirements and *application* and examination procedures, including *application* forms, notices of examination, examination study materials, and a list of accredited training courses for certificates for which completion of a *Department*–accredited training course is a qualification, may be obtained from the *Department*'s web site, www.nyc.gov/fdny, and from the Licensing Unit of the *Bureau of Fire Prevention*, Fire Department Headquarters, 9 MetroTech Center, 1st Floor, Brooklyn, NY 11201-3857.

(2) Submission. Original *applications* for certificates shall be filed in person with the Licensing Unit of the *Bureau of Fire Prevention*. Renewal certificate *applications* may be filed in person or by mail, except as may be otherwise specified by the *Department*.

(3) Incomplete applications. The *Department* reserves the right not to accept for filing any *application* that is incomplete or otherwise deficient, including any *application* that is submitted without the required supporting documentation or

application fee. The *Department* will provide the applicant notice of any *application* that is not accepted, and, except for *applications* determined to be fraudulent, shall afford the applicant a reasonable time to correct or supplement such *application*. Original *applications* not corrected or supplemented within 30 days of the applicant's being notified will be deemed abandoned.

(4) Examinations. Except as otherwise provided in this section, applicants for an original certificate must obtain a passing score on the applicable examination administered by the *Department*.

(5) Identification. Applicants for an original certificate shall provide two (2) pieces of picture identification satisfactory to the *Department*, such as a driver's license, passport or employee identification card. The *Department* reserves the right to require additional identification.

(6) Photographs. All applicants for an original certificate will be photographed by the *Department* for identification purposes. The *Department* may require a certificate holder filing for renewal of his or her certificate to report to the *Department* to be photographed. Failure to comply with such a notice constitutes grounds for non-renewal of the certificate. In lieu of, or in addition to, such photographs, the *Department* may require submission of two (2) passport-size photographs in connection with an original or renewal certificate *application*.

(7) Fees. *Application* fees relating to *certificates of fitness* and *certificates of qualification*, including any written examination and practical examination, shall be as set forth in FC Appendix A or the *rules*. Except as otherwise authorized by the *Department*, fees shall be paid in cash, check or money order payable to the "New York City Fire Department."

(A) Written examination fees shall be paid at the time of submission of the *application*. Such fees are non-refundable.

(B) Applicants for a practical examination will be notified of the date by which the applicable examination fee must be paid. Such examination fees are non-refundable, except when applicants give proper and timely notice of cancellation in accordance with the procedures set forth in the *Department*'s notice of examination or other applicable notice.

(8) Applicants delinquent on child support payments. In accordance with the United States Social Security Act, 42 USC §666(a)(13), and New York State General Obligations Law §3-503, *applications* for original or renewal certificates will be reviewed for compliance with child support obligations and will be denied when required by such laws when the applicant has been identified by the Office of Child Support Enforcement of the New York City Human Resources Administration (or any successor agency) as delinquent on child support

payments. Applicants for certificates will be required to disclose their social security numbers on their *applications* for purposes of such review.

(d) Examinations

(1) All written examinations, and the practical (computer simulator) examination for *certificates of qualification*, will be administered by the Licensing Unit of the *Bureau of Fire Prevention* at Fire Department Headquarters, except as may be otherwise specified by the *Department* in the notice of examination or other appropriate notice. Practical (on-site) examinations for fire safety director and fire safety/EAP director will be administered by such personnel and at such locations as may be specified by the *Department* in the notice of examination or other appropriate notice.

(2) All examinations will be conducted in the English language.

(3) The subject matter of an examination, and, for any numerically-graded certificate examination, the passing grade, shall be as set forth on the *Department's* notice of examination. The passing grade shall be set at 70% unless otherwise specified in such notice of examination.

(4) An applicant will be provided written notice of his or her examination grade.

(5) An applicant who fails to obtain a passing grade on a written, practical, or practical (on-site) examination may re-take the examination, subject to the availability of *Department* resources and appointments. The required fee must be paid by the applicant each time he or she is administered an examination. An applicant for a *certificate of fitness* that requires successful completion of a *Department*-accredited training course may be given two (2) opportunities to pass each written and practical examination for the certificate. An applicant who fails to obtain a passing grade after the second examination will be required to re-take and successfully complete the training course in its entirety and re-apply for the *certificate of fitness.*

(6) In lieu of a written examination for a *certificate of fitness*, the *Department*, in its discretion, may accept educational credentials or professional licenses or certifications that demonstrate the applicant's knowledge of, or proficiency in, the subject matter for which the certificate is required.

(7) In addition to any required written examination, applicants for certificates of fitness relating to the storage, *handling* or use of explosives in connection with blasting operations may be required to pass an oral examination administered by the Explosives Unit of the *Bureau of Fire Prevention* as set forth in the applicable notice of examination.

(e) Certificates of Fitness Application Requirements

(1) Original Applications. In addition to general *application* requirements set forth in R113-01(c), applicants for a *certificate of fitness* shall submit the following proof of qualifications and fitness and such other information and documentation as the *Department* may require. The *Department* will not accept such proof if its validity cannot be satisfactorily verified.

(A) A driver's license, passport, birth certificate or other proof satisfactory to the *Department* that the applicant meets the minimum age requirements set forth in FC113.4.

(B) Except as otherwise provided in this section, a letter of recommendation satisfactory to the *Department*, from the applicant's employer, previous employer, prospective employer, trade school or trade union. Such letter shall be on the letterhead of such employer, trade school or trade union; be signed by the employer, or an officer of the trade school or trade union (and indicate such officer's title); and contain the following information:

(*1*) the full name of the applicant and any other name under which the applicant may be known;

(*2*) the length of time the applicant has been known to the employer, trade school or trade union, the nature of the applicant's employment or training, and the length of time such employment or training was pursued and whether it was satisfactorily completed;

(*3*) the address of the building wherein the applicant will be employed, if applicable;

(*4*) information attesting to the good character, habits and relevant or required work experience or training of the applicant; and

(*5*) information indicating that the applicant's physical condition will permit the applicant to perform the duties associated with the certificate for which *application* is being made.

(C) Applicants for certificates of fitness who are self-employed shall submit, in lieu of letter of recommendation from a previous or prospective employer, a notarized written statement containing the information required by R113-01(e)(1)(B).

(2) Special application requirements

(A) Applicants for *certificates of fitness* for blasting operations and special effects shall submit proof of not less than two years' satisfactory

experience in handling the type of explosives or *special effects* for which a *certificate of fitness* is sought. Such proof shall include notarized letters from two (2) holders of a *certificate of fitness* for blasting operations, or from two (2) holders of a *certificate of fitness* for special effects, respectively, attesting to the applicant's character, habits and relevant work experience.

(B) Applicants for a *certificate of fitness* for fireworks display shall have attended a class conducted by a company holding a *fireworks contractor certificate* and shall submit notarized letters from two (2) holders of a *certificate of fitness* for fireworks displays attesting to the applicant's character, habits and relevant work experience.

(C) Applicants for a *certificate of fitness* for supervision of a *standpipe system* and/or *sprinkler system* shall obtain from their employer and submit as part of their *application* a sketch or plan of the *standpipe* and/or *sprinkler systems* that the applicant would be responsible for supervising.

(f) Certificate of Qualification Application Requirements

(1) Original applications. In addition to general *application* requirements set forth in R113-01(c), applicants for an original *certificate of qualification* shall submit the following proof of qualifications and fitness and such other information and documentation as the *Department* may require:

(A) A driver's license, passport, birth certificate or other proof satisfactory to the *Department* that the applicant satisfies the minimum age requirements set forth in FC113.4;

(B) A high school diploma, or its educational equivalent, approved by a state's Department of Education, or an approved accrediting organization;

(C) A Universal Technician Certification issued by the United States Environmental Protection Agency pursuant to Subpart F of Part 82 of Title 40 of the Code of Federal Regulations; and

(D) Proof of the following experience and/or qualifications in refrigerating systems or related technology:

(*1)* at least one (1) year of practical experience in the preceding three (3) years working in a building or plant with refrigerating or air conditioning equipment that, at a minimum, has an individual system containing over 50 pounds of refrigerant, or a prime mover or compressor of more than 50 horsepower, or an aggregate of individual systems of more than 15 horsepower each with a total of more than 100 horsepower; or

(*2*) at least one (1) year of practical experience in the preceding three (3) years engaged in the servicing and repair of refrigerating or air conditioning equipment rated at five (5) horsepower or more, or containing 20 pounds or more of refrigerant; or

(*3*) a combination of practical experience as set forth in R113-01(f)(1)(D)(*1*) and (*2*) that is satisfactory to the *Department*; or

(*4*) a current high pressure boiler operating engineer license issued by the *Department of Buildings*; or

(*5*) a current marine engineer certificate issued by the United States Coast Guard; or

(*6*) a current Professional Engineer's license issued in the United States; or

(*7*) have satisfactorily completed a training course accredited by the *Department* in *refrigerating systems* and related technology, of at least 200 hours duration, at least 25 hours of which shall have involved practical skills exercises/hands-on demonstrations.

(2) Renewal applications. On or after January 1, 2016, the holder of a *certificate of qualification* who has not successfully completed a course that addressed issues of building operation, maintenance and recordkeeping, as set forth in R113-07(c)(2)(V), shall, at the time of the next renewal of such certificate, present evidence of the successful completion of such a course. Such course shall be conducted by an institution or program accredited by the *Department* pursuant to R113-04 and 113-12. Applicants that can demonstrate that they have successfully completed a continuing education course in building operations, maintenance and recordkeeping in connection with the renewal of their *certificate of fitness* for fire safety director, as set forth in R113-02(c)(7), shall be deemed to have satisfied this requirement.

(3) Registration of work locations

(A) *Certificate of qualification* applicants or holders must register each work location at which they will be performing the duties of a refrigerating system operating engineer.

(B) A *certificate of qualification* does not authorize the holder to perform such duties at any location other than work locations registered with the *Department*. A c*ertificate of qualification* holder shall not perform any duties requiring such certificate until such time a work location has been

registered in accordance with this section. A *certificate of qualification* that does not have a work location registered with the *Department* shall be deemed "Not in Use" (inactive) and not valid to perform the duties of a refrigerating system operating engineer.

(C) To register a work location, a *certificate of qualification* applicant or holder shall submit a letter from the employer for whom he or she will be performing the duties of a *certificate of qualification* holder. Such letter shall be on business letterhead, and signed by an appropriate officer of the employer, and provide the following information and documentation:

(*1*) full name of the applicant;

(*2*) *premises* address, building designation and location of system to be supervised by the certificate holder (for example: 500 East 150th Street, B building, basement, east wing, Room B101);

(*3*) name of the manufacturer of the *refrigerating system*;

(*4*) type and number of pounds of refrigerant in the system;

(*5*) horsepower rating of the *refrigerating system*;

(*6*) date of installation of the *refrigerating system*; and

(*7*) a copy of the *Department permit* for such *refrigerating system*.

(D) *Certificate of qualification* applicants or holders seeking to register more than one (1) work location shall present a letter from the employer for each work location. In addition to the information and documentation set forth above, such letter shall indicate the days and specific hours worked, and specify whether or not the certificate holder would be providing *personal* or *general supervision* of the equipment in accordance with the requirements of FC606.1.1. A *certificate of qualification* shall not be registered for more than one (1) work location for the same day and time if *personal supervision* is required at more than one (1) such location.

(E) *Certificate of qualification* holders seeking to change a registered work location shall register such work location in accordance with the procedures set forth in this section.

(g) Misconduct. In addition to any other penalties provided by law, misconduct on the part of an applicant or holder of a *certificate of fitness* or *certificate of qualification* shall be grounds for denial, non-renewal, suspension or revocation of a certificate, and denial of an *application* for a certificate or the opportunity to take a certificate examination. Such misconduct includes, but is not limited to:

(1) the failure of a certificate holder to properly discharge his or her duties;

(2) any false and fraudulent conduct in connection with an *application* for a certificate or the duties of a certificate holder, including:

(A) any false or fraudulent statement or submission;

(B) any unauthorized alteration or use of a certificate or possession of any fraudulent certificate;

(C) cheating on an examination; and

(D) impersonating another or allowing oneself to be impersonated;

(3) the failure to promptly notify the *Department* of any change in the applicant's or certificate holder's residence address, work location, or any other notifications required pursuant to R113-01(b)(2).

(4) any other unlawful or unsafe conduct that bears on the integrity or reliability of an applicant or certificate holder; and

(5) compromising the integrity or confidentiality of a *Department* examination.

§ 113-02 Fire and Life Safety Director Certificate of Fitness

(a) Scope. This section sets forth standards, requirements and procedures for issuance of a *certificate of fitness* to perform the duties of an *FLS* director, including the process by which holders of a *certificate of fitness* for fire safety director or fire safety/EAP director may obtain a *certificate of fitness* for *FLS* director.

(b) General Provisions. Applicants for *FLS* director *certificates of fitness* shall meet the minimum qualifications and comply with the general requirements for a *certificate of fitness* set forth in FC113 and R113-01.

(c) Qualifications. In addition to the qualifications set forth in FC113 and R113-01, and except as otherwise provided in R113-02(f), applicants for an *FLS* director *certificate of fitness* shall possess and demonstrate to the satisfaction of the *Department* the following qualifications:

(1) At least three (3) years' full-time work experience in one or more of the following fields (in any combination thereof), OR 18 months' full-time work experience in one or more of the following fields (in any combination thereof) that includes at least six (6) months of continuous employment at one work location:

(A) firefighting or other public safety emergency response employment;

(B) any fire safety-related employment, including code enforcement, fire safety inspection, fire prevention or emergency preparedness;

(C) the design, installation, operation or maintenance of building fire protection, electrical, plumbing, heating, ventilation, or air conditioning systems, or other building system regulated by the *construction codes*; or

(D) equivalent experience acceptable to the *Department;*

(2) Successful completion of an *FLS* director training course accredited by the *Department* pursuant to R113-04 and R113-05;

(3) Receipt of a passing grade on each of the *Department*'s written examinations for an *FLS* director *certificate of fitness*, which tests the applicant's knowledge of matters having a bearing on the duties of an *FLS* director. The *Department* will issue a certificate of completion to each applicant who meets the requirements set forth in R113-01(c)(1) and (c)(2) and receives a passing grade on the written examinations. Such certificate of completion shall be included in the practical (on-site) examination *application*;

(4) Receipt of a passing grade on the practical (on-site) examination administered by the *Department*, which tests the applicant's knowledge of the characteristics and occupancy of each work location in which the applicant is to serve as *FLS* director (as set forth in R113-02(e)), including knowledge of the following information:

(A) *FLS* plan provisions and Building Information Card;

(B) Certificate of occupancy provisions;

(C) Height, area, construction and occupancy classification;

(D) Number, type and location of exits;

(E) Number, type and location of areas of refuge, if any;

(F) Number, type and location of elevators and escalators;

(G) Interior fire alarms and other *fire alarm systems* or communication systems;

(H) *Standpipe system* components and operation;

(I) *Sprinkler system* components and operation, including fire pumps;

(J) *Fire extinguishing system* components and operation;

(K) Number of persons normally employed in building;

(L) Number of persons normally visiting the building;

(M) Plan for *drills* (fire and non-fire emergencies);

(N) Table of organization for drills and for *FLS* staff;

(O) Operation of building service equipment, including electrical, lighting, heating, ventilating, air-conditioning and firefighting equipment, and trash compactors;

(P) Operation of elevators, including firefighter emergency service and other elevator service modes;

(Q) Alterations and repair operations and the protective and preventive measures necessary to safeguard such operations, with particular attention to *hot work* operations and the storage, *handling* and use of *flammable liquids*, *combustible liquids* and *flammable gases*;

(R) Other occupancies in the building and the proper protection and maintenance thereof including but not limited to day care facilities and places of assembly, and

(S) Procedures for assisting persons with special needs.

(5) Physical ability to perform the duties of the position; and

(6) At the time of renewal of an *FLS* director *certificate of fitness*, receipt of a passing grade on a practical (on-site) examination administered by the *Department*, when required by R113-02(e)(3).

(d) Application Procedures. Applicants must complete each of the following steps in order to be eligible for an *FLS* director *certificate of fitness*:

(1) Secure the experience necessary to satisfy the minimum qualifications for the certificate;

(2) Attend and successfully complete an *FLS* director training course accredited by the *Department* pursuant to R113-04 and R113-05;

(3) Within nine (9) months of successfully completing the *FLS* director training course, apply for and receive a passing grade on the fire safety component of the

FLS director written examination administered by the *Department.* An applicant need not be currently employed as an *FLS* director to take the written examination;

(4) Within nine (9) months of receiving a passing grade on the fire safety component of the *FLS* director written examination, apply for and receive a passing grade on the non-fire emergency component of the *Department's* written examination. An applicant need not be currently employed as an *FLS* director to take the examination. Upon receiving a passing grade on the non-fire emergency component of the *FLS* director written examination, the *Department* will issue a certificate of completion; and

(5) Within one (1) year of obtaining a certificate of completion, apply for and receive a passing grade on the *Department's* practical (on-site) examination at the work locations in which the applicant is to serve as an *FLS* director. An applicant who has received a certificate of completion may perform the duties of a *FLS* director on an interim basis (as set forth in R113-02(f)(6)), pending administration of the practical (on-site) examination.

(e) Registration of Work Locations. The *FLS* director *certificate of fitness* must be registered for each work location at which the holder of such certificate will be performing the duties of a *FLS* director. A *FLS* director *certificate of fitness* authorizes the holder of such certificate to perform such duties only at those work locations registered with the *Department* and at no other work location. Registration of multiple work locations shall not be construed to authorize performance of the duties of a *FLS* director at more than one (1) work location at the same time.

(1) Limitation on work locations. An *FLS* director *certificate of fitness* may be registered by the Department for one (1) or two (2) work locations. Special approval is required to register for more than two (2) work locations, and shall only be granted upon a determination that the holder is capable of demonstrating and maintaining proficiency at each work location. Approval to register for more than one (1) work location shall be subject to administration of practical (on-site) examinations at each work location, as set forth in R113-02(e)(3), and such other terms and conditions as the *Department* may require to assure that proficiency is maintained. In determining the holder's ability to maintain proficiency at multiple work locations, considerations may include:

(A) the number of hours to be regularly worked at each location; and

(B) similarities in building configuration and building systems at the work locations (such as may be the case with an office building complex or hotel chain).

(2) Submission. To register a work location, an *FLS* director *certificate of fitness* applicant or holder shall submit a letter from each employer for whom he or she

will be performing the duties of an *FLS* director. Such letter shall be on business letterhead, and signed by an appropriate principal or officer of the employer, and provide such information and documentation as may be required by the *Department*.

(3) Practical (on-site) examinations. The *Department* will administer, at the time of application, a separate practical (on-site) examination for a second work location that an *FLS* director *certificate of fitness* applicant or holder seeks to register, and each additional work location for which special approval is required from the *Department* in accordance with R113-02(e)(1). The *Department* may require the holder to submit to an additional practical (on-site) examination at time of renewal of the certificate, or such other time as the *Department* may specify, upon a determination that such examination is necessary to demonstrate the holder's continuing qualifications and fitness to serve as an *FLS* director in more than one work location. The *Department* may give priority to first-time applicants in the scheduling of practical (on-site) examinations.

(4) Change in Work Location. A change in work location must be immediately reported to the Licensing Unit of the *Bureau of Fire Prevention*, and application made for a practical (on-site) examination at the new work location prior to commencing work at such location.

(5) Certificate not in use. The *certificate of fitness* of an *FLS* director who has no work location registered with the *Department* shall be deemed "Not In Use" (inactive) and is not valid to perform the duties of an *FLS* director. An *FLS* director *certificate of fitness* that is in "Not In Use" status may be renewed only once.

(f) Transition to *FLS* Director from Fire Safety Director and Fire Safety/EAP Director

(1) Transition timeframe. Effective March 1, 2020, an *FLS* director *certificate of fitness* or, as set forth in R113-02(f)(6), a certificate of completion allowing the applicant to perform the duties of an *FLS* director on an interim basis, will be required in all occupancies currently required to be staffed by a fire safety/EAP director or fire safety director. Fire safety/EAP director *certificates of fitness* and fire safety director *certificates of fitness* will not satisfy the Fire Code requirement for an *FLS* director and will not be renewed upon expiration.

(2) Application for FLS director certification. All persons holding a fire safety director or fire safety/EAP director *certificate of fitness* must apply to the *Department* for an *FLS* director *certificate of fitness* no later than December 1, 2018, or the expiration of their *certificate of fitness*, whichever is sooner. An *FLS* director *certificate of fitness* will be issued to each such person who possesses and demonstrates to the satisfaction of the *Department* the qualifications set forth in R113-02(f)(3) or (4), as applicable. A person who, without good cause, fails to

timely fulfill the requirements for the *FLS* director *certificate of fitness* may be required to submit an original *application* for such *certificate of fitness.*

(3) Transition requirements for fire safety/EAP directors. Not later than September 4, 2017, or the expiration of the *certificate of fitness*, whichever is sooner, all persons holding a fire safety/EAP director *certificate of fitness* must attend and successfully complete a training course accredited by the *Department* pursuant to R113-04 and R113-06 that addresses active shooter and medical emergencies.

(4) Transition requirements for fire safety directors. All persons holding a fire safety director *certificate of fitness* but not an EAP director *certificate of fitness* shall undertake and successfully complete the following requirements.

(A) Not later than September 4, 2017, or the expiration of their *certificate of fitness*, whichever is sooner, attend and successfully complete a training course accredited by the *Department* pursuant to R113-04 and R113-06 that addresses active shooter and medical emergencies, which may be a training course in non-fire emergencies accredited pursuant to R113-04 and R113-05 that includes training in active shooter and medical emergencies;

(B) Not later than September 3, 2018, or the expiration of their *certificate of fitness*, whichever is sooner, attend and successfully complete a training course accredited by the *Department* pursuant to R113-04 and R113-05 that addresses non-fire emergencies generally (commonly referred to as Emergency Action Plan training);

(C) Not later than December 1, 2018, or the expiration of their *certificate of fitness*, whichever is sooner, apply to the *Department* for an *FLS* director *certificate of fitness*;

(D) Not later than March 1, 2019, receive a passing grade on the non-fire emergency component of the *Department*'s written examination. (Employment or the promise of employment as an *FLS* director in a particular building is not required to take such examination.) Upon receiving a passing grade on the non-fire emergency component of the written examination, the *Department* will issue a certificate of completion. An applicant who has received a certificate of completion may serve as an *FLS* director on an interim basis, as set forth in R113-02(f)(6), pending administration of the practical (on-site) examination; and

(E) Not later than one year from obtaining a certificate of completion, apply for and receive a passing grade on the *Department*'s practical (on-site) examination at the work location in which the applicant is to serve as an *FLS* director.

(5) Transition requirements for certificates not in use. Any person holding a fire safety director or fire safety/EAP director *certificate of fitness* that is in "not in use" status must timely complete the transition requirements applicable to the *FLS* director *certificate of fitness*, as set forth in R113-02(f)(3) or (4), as applicable, or its "not in use" status will lapse on December 1, 2018, or the expiration of their *certificate of fitness*, whichever is sooner.

(6) Interim FLS Directors. When an applicant for an *FLS* director *certificate of fitness* is to be employed in a work location that has not yet obtained *Department* acceptance of its comprehensive fire safety/EAP plan, such applicant may, upon receiving a certificate of completion, perform the duties of an *FLS* director on an interim basis pending administration of the practical (on-site) examination for a period not to exceed one (1) year from the date of issuance of the certificate of completion or for such other period of time as the *Department* may grant in its discretion. The presence on the premises of a person holding such a *certificate of completion* satisfies the requirement for an *FLS* director during such interim period, as set forth in R113-02(d)(5) and (f)(4). "Perform the duties of an *FLS* director on an interim basis" means that such person is authorized to implement the provisions of FC Chapter 4 and R404-01 with respect to fire emergencies and to take such actions in response to non-fire emergencies as the *owner* may authorize, based on the non-fire emergency plan or procedures currently in place.

§ 113-03 Reserved

§ 113-04 Accreditation of Training Courses

(a) Scope

(1) This section sets forth general procedures, standards and requirements for the accreditation of training courses by the *Department*.

(2) Training courses for the *FLS* director *certificate of fitness* shall also comply with the provisions of R113-05.

(3) Training courses for active shooter and medical emergency preparedness shall also comply with the provisions of R113-06.

(4) Training courses for the refrigerating system operating engineer *certificate of qualification* shall also comply with the provisions of R113-07.

(5) Training courses for the construction site fire safety manager *certificate of fitness* shall also comply with the provisions of R113-10.

(6) Training courses for building operation, maintenance and recordkeeping shall also comply with the provisions of R113-12.

(b) General Provisions

(1) Prohibited claims and representations. It shall be unlawful for any educator, educational institution or program or other person or entity to offer a course purporting to train or otherwise qualify an individual for the *certificates of fitness* formerly issued by the *Department* for fire safety director or fire safety/EAP director, a *certificate of fitness* for *FLS* director, a *certificate of qualification* to direct, control or supervise the operation of a *refrigerating system* or related technology, or a *certificate of fitness* for construction site fire safety manager, or to offer another training course requiring *Department* accreditation pursuant to this section, or to make a similar claim, or purport to be approved by the *Department*, or otherwise make reference to the *Department* in connection with such certificates, prior to receiving *Department* accreditation of such course.

(2) Term of accreditation. Original and renewal accreditations will be issued for a term of one (1) year, unless a shorter term is specified by the *Department*.

(c) Accreditation Standards. The *Department* will grant accreditation to a training course only if the applicant establishes that the training course will meet the following minimum standards:

(1) The training course provides the hours and topics of instruction required by the *Department* for that type of training course.

(2) A written examination of a type acceptable to the *Department* is administered and a passing grade acceptable to the *Department* is required for successful completion of the course.

(3) The training course has been developed and will be taught and evaluated by individuals possessing the requisite knowledge, skills, experience or other appropriate qualifications. The *Department* may require applicants who are instructors at *Department*-accredited training schools to hold the applicable certificate of fitness or to establish their eligibility for issuance of such *certificate*.

(4) Records satisfactorily demonstrating compliance with accreditation standards and requirements, including records of course administration and student performance, are maintained.

(5) *Department* representatives are allowed to attend training courses and audit records to monitor compliance with accreditation standards and requirements.

(6) Each student is required to complete a *Department*-approved course evaluation form upon completion of the training course, and the completed forms are returned to the *Department* no later than five (5) days after course completion.

(d) Application Requirements

(1) Application information. Information relating to training course accreditation *application* requirements and procedures, including *application* forms, may be obtained from the *Department*'s web site, www.nyc.gov/fdny, and from the Licensing Unit of the *Bureau of Fire Prevention*, Fire Department Headquarters, 9 MetroTech Center, 1st Floor, Brooklyn, NY 11201-3857.

(2) Submission. All *applications* for training course accreditation shall be submitted to the Licensing Unit of the *Bureau of Fire Prevention*, and shall include the fee set forth in FC A02.1.

(3) Original applications. All original *applications* shall include the following information and documentation, and such other information and documentation as the *Department* may require:

(A) The name and address of the educator or educational institution or program proposing to offer the training course;

(B) The name and contact information, including a telephone number, of a designated representative;

(C) The course location and course schedule (dates and time), including the location of any practical skills exercise/hands-on demonstrations;

(D) The type of course for which approval is being requested;

(E) A detailed outline of the course curriculum;

(F) A description of the teaching methods to be used to present each topic, (e.g., lectures, discussions, practical skills exercises and audio-visual materials);

(G) Copies of all written materials to be distributed, including sample examinations;

(H) Tuition fees, study material fees and any other fees to be charged students;

(I) A list of instructors, documentation of their qualifications (including a resume), and a list of the subjects each instructor will teach;

(J) The instructor-to-student ratio for classroom, practical skills exercises/hands-on demonstrations;

(K) Procedure for documenting student attendance of each student at each training session;

(L) Any affiliations with other educational institutions or trade, union or professional organizations;

(M) A summary of the applicant's prior history and experience in conducting similar training courses, including the location and approximate date of each such course;

(N) A list of all other licensing authorities for which the training courses have been approved or disapproved; and

(O) Evidence of compliance with New York State Department of Education regulations, or a statement from the applicant that the applicant and/or the training course are not subject to such regulations.

(4) Renewal applications

(A) An *application* for renewal of accreditation shall include updated course information, including any course schedule, curriculum or personnel changes.

(B) The *Department* will evaluate the effectiveness of any training course, including consideration of the success of its students in achieving passing grades on *certificate of fitness* or *certificate of qualification* examinations, in determining whether to grant an *application* for renewal of accreditation.

(e) Training Course Changes

(1) Notice required. *Application* shall be made to the *Department* for approval of the following training course changes prior to implementing such changes:

(A) personnel;

(B) course schedule (dates, times and location);

(C) course curriculum; or

(D) teaching methods.

(2) Conditional approval. Conditional approval may be granted pending a complete evaluation of the changes.

(f) Misconduct. In addition to any other penalties provided by law, misconduct on the part of an applicant for accreditation, or any educator or educational institution or program granted accreditation, shall be grounds for denial, non-renewal, suspension or revocation of accreditation. Such misconduct includes, but is not limited to, the following acts or omissions:

(1) any false or fraudulent conduct in connection with an *application* for accreditation or other *Department* approval;

(2) the failure to conduct the course in accordance with standards and requirements for accreditation;

(3) the failure to timely notify the *Department* of training course changes or to obtain approval therefor;

(4) the failure to maintain proper recordkeeping;

(5) the failure to allow *Department* representatives to attend a training course and/or audit records in order to monitor compliance with accreditation standards and requirements;

(6) the failure to disclose to the *Department* training course information, including relating to the preparation, security and administration of examinations and students' grades; or

(7) any other conduct that bears on the integrity of the applicant or accredited educator or educational institution or program, or the effectiveness of the training course.

§ 113-05 Fire Safety and Life Director Training Courses

(a) Scope. This section sets forth the minimum hours of classroom instruction and topics required for *Department* accreditation of training courses for *certificate of fitness* for *FLS* director.

(b) General Provisions

(1) General accreditation requirements. *FLS* director training courses shall comply with the general training school accreditation procedures, standards and requirements set forth in R113-04.

(2) Instructor qualifications. Instruction in *FLS* director training courses shall be conducted by persons with law enforcement, fire prevention/suppression, engineering, environmental safety, fire safety director, meteorological, technological experience or expertise, prior experience in fire safety and non-fire emergency (EAP) training, or other appropriate experience or expertise that qualifies them to teach the respective instructional topics of the training course.

(c) Course Structure, Required Hours and Topics of Instruction *FLS* director training courses shall be organized and conducted to address general topics and fire safety, followed by non-fire emergencies. *FLS* director training courses shall provide not less than 31 hours of training, as follows: four (4) hours in general topics, 16 hours in fire safety, and 11 hours in non-fire emergencies (Emergency Action Plan training).

(1) General topics. *FLS* director training courses shall provide instruction in the following general topics:

(A) *FLS* director qualifications

(*1*) Qualifications for *certificate of fitness*

(*2*) *Department application* forms

(*3*) *Certificate of fitness* written and practical (on-site) examinations

(B) Building construction and systems

(*1*) Alarm systems

(*2*) *Sprinkler systems*

(*3*) *Standpipe systems*

(*4*) Smoke detectors

(*5*) Portable fire extinguishers

(*6*) Types of alarm systems: office building, hotel/motel, high-rise building, interior fire alarm

(*7*) *Fire command center*

(*8*) Elevators, including the different modes of elevator operation

(*9*) Signs

(*10*) Stair pressurization

(*11*) Smoke shaft

(*12*) Compartmentation

(*13*) Construction

(*14*) HVAC systems

(*15*) Smoke control and purge systems

(16) History of fatal fires in high-rise office and residential buildings, nursing homes, night clubs and other places of assembly, and other occupancies

(2) Fire safety training. *FLS* director training courses shall, at a minimum, provide not less than 16 hours of instructional training in fire safety, of which not less than two (2) hours shall consist of practical skills exercise/hands-on demonstrations. *FLS* director training courses shall provide instruction in the following fire safety topics:

(A) *FLS* director duties and responsibilities in fire emergencies

(*1*) Role of *FLS* director and deputy *FLS* director

(*2*) *FLS plan* format

(*3*) *Fire drills* and evacuation

(*4*) Training of fire brigade

(*5*) Human behavior and personal safety of building occupants

(*6*) Communication with *Department* at fire incidents

(*7*) Inspection and prevention of fires

(B) Legal requirements

(*1*) Local Law Nos. 5 of 1973, 16 of 1984, 41 of 1978, 58 of 1987 and 26 of 2004 and the 2008 and 2014 Fire Codes, including any amendments thereto

(*2*) *Owner's* legal responsibilities

(*3*) Americans with Disabilities Act of 1990, including any amendments thereto

(C) Firematics

(*1*) Chemistry of fire

(*2*) Properties of fire

(*3*) Behavior of fire

(*4*) Flame-resistant chemicals and treatments

(*5*) Ignition sources

(*6*) Heat transfer

(D) Practical skills exercise/hands-on demonstration

(*1*) Elevator recall

(*2*) *Fire alarm systems* in office buildings, hotels, places of assembly and other occupancies, and the features of such systems and capabilities, including *fire command centers*, announcements, and warden phones

(E) Building operation, maintenance and recordkeeping. Building Code, Fire Code and *rule* requirements for building operation, maintenance and recordkeeping, as set forth in R113-12(c)(2).

(3) Non-fire emergency (Emergency Action Plan) training. *FLS* director training courses shall, at a minimum, provide not less than eleven (11) hours of instructional training, of which not less than nine (9) hours shall consist of Category 1 topics and not less than two (2) hours shall consist of Category 2 topics.

(A) Category 1 shall include the following instructional topics, and such other topics as the *Department* may from time to time designate by written notice to accredited training course providers:

(*1*) Local Law No 26 of 2004, Fire Code Chapter 4, and any amendments or other rules promulgated pursuant thereto;

(*2*) Shelter in place, in-building relocation, partial building evacuation and full building evacuation concepts;

(*3*) Building communications and announcements;

(*4*) Building ventilation options;

(*5*) Use of elevators;

(*6*) Human services, including building occupants with special needs and related mobility and communications issues;

(*7*) Weapons of mass destruction, including dirty bombs and other radiological weapons;

(*8*) Active shooter and medical emergencies, as set forth in R113-06;

(9) *Hazardous material* incidents involving biological agents, including contamination issues;

(*10*) *Hazardous material* incidents involving chemical agents;

(*11*) Bombs, bomb threats and suspicious packages;

(*12*) Weather-related emergencies;

(*13*) Failure of building utilities, mechanical systems and/or telecommunications systems; and

(*14*) Training methodology, including application protocols and post drill critiques.

(B) Category 2 shall include the following instructional topics, and such other topics as the *Department* may from time to time designate by written notice to accredited training course providers:

(*1*) Civil disturbances and blackouts;

(*2*) Familiarization with incident command structure and emergency response operations;

(*3*) Situational awareness in the context of non-fire emergencies;

(*4*) Applicable lessons from major incidents including the World Trade Center; and

(*5*) Practical (on-site) test information as provided by the *Department*.

(d) Course Administration and Completion

(1) The ratio of students to instructors in the fire safety practical skills exercise, including practical skills exercise/hands-on demonstrations, shall not exceed 25-to-1.

(2) Students must attend all training classes to be eligible to take the final examination.

(3) Students shall be allowed two (2) opportunities to pass the final examination. Students who fail the final examination on the second attempt must re-take the course in its entirety.

§ 113-06 Active Shooter and Medical Emergency Preparedness Training Courses

(a) Scope. This section sets forth the minimum hours of classroom instruction and topics required for *Department* accreditation of training courses for active shooter and medical emergency preparedness.

(b) General Provisions

(1) General accreditation requirements. Active shooter preparedness training courses shall comply with the general training school accreditation procedures, standards and requirements set forth in R113-04.

(2) Instructor qualifications. Active shooter preparedness training courses shall be conducted by persons with police, fire, other governmental law enforcement, military, prior experience in fire safety and non-fire emergency (EAP) training, or other appropriate experience or expertise and fire prevention knowledge, that qualifies them to teach the respective instructional topics of the training course.

(c) Required Hours and Topics of Instruction

(1) Training courses shall, at a minimum, provide not less than four (4) hours of live instruction.

(2) Training courses shall include instruction in the following active shooter topics:

(A) Introduction to active shooter emergencies (including the definition, profile and typical characteristics);

(B) Recommended response of building occupants to an active shooter emergency (Avoid, Barricade, Confront);

(C) Recommended response of emergency preparedness and building staff to an active shooter emergency (including 911 notification, building occupant notification, use of elevators, use of fire alarm system);

(D) Notification of New York City 911 System and information to be reported;

(E) Response of building occupants and emergency preparedness/building staff to law enforcement emergency responders;

(F) Training of building occupants;

(G) Emergency preparedness planning for an active shooter situation;

(H) Scenarios of active shooter situations and case studies; and

(I) *Certificate of fitness* testing information provided by the *Department*.

(3) Training courses shall include instruction in the following medical emergency topics:

(A) Training of building occupants to notify *FLS* director or other designated *FLS staff* of medical emergencies on the premises that have been reported to New York City 911 System;

(B) Confirmation that the medical emergency has been reported to the New York City 911 System and additional information to be reported to 911, including the address of the appropriate building entrance or other location at which emergency responders will be met by *FLS* director or other designated *FLS staff*;

(C) Designation of *FLS staff* to meet emergency responders, when necessary;

(D) Designation of *FLS staff* to respond to patient location to investigate and report to *FLS* director;

(E) *FLS staff* notification of CPR-trained volunteers on the premises and request to render assistance (when appropriate);

(F) If patient is not on street level, recall of elevator prior to arrival of emergency responders and hold for emergency responder use; and

(G) Location of defibrillators or other medical equipment for medical emergencies.

(d) Course Administration and Completion

(1) The final examination required for successful completion of the training course shall not be included toward the minimum number of classroom hours required by this section.

(2) Students must attend all training classes to be eligible to take the final examination.

(3) Students shall be allowed two (2) opportunities to pass the final examination. Students who fail the final examination on the second attempt must re-take the course in its entirety.

§ 113-07 Refrigerating System Operating Engineer Training Courses

(a) Scope. This section sets forth the minimum hours of classroom instruction and topics required for *Department* accreditation of training courses for *certificate of qualification* for refrigerating system operating engineer.

(b) General Provisions

(1) General accreditation requirements. Refrigerating system operating engineer training courses shall comply with the general training school accreditation procedures, standards and requirements set forth in R113-04.

(c) Required Hours and Topics of Instruction

(1) Training courses shall, at a minimum, provide not less than 200 hours of instructional training, of which not less than 25 hours shall consist of practical skill exercise/hands-on demonstration in which each student must personally perform the functions set forth in R113-07(c)(2)(U).

(2) Training courses shall provide instruction in the following topics:

(A) Definitions and terminology

(*1*) British thermal unit

(*2*) Specific heat

(*3*) Latent heat

(*4*) Sensible heat

(*5*) Refrigeration effect

(*6*) Humidity

(*7*) Absolute zero

(B) Calculations with refrigeration formulas

(*1*) Refrigeration effect

(*2*) Compressor displacement/capacity

(*3*) Compression ratio

(*4*) Horsepower requirements

(*5*) Refrigerant circulation requirements

(C) Thermodynamics principles of refrigeration

(*1*) Temperature scales

(*2*) Nature of heat and heat flow

(*a*) Conductors and insulators

(*3*) Effects of heat energy

(*4*) Molecular theory of heat

(*5*) Temperature and heat

(*6*) Pressure-temperature relationships

(*7*) Physical changes of state

(*8*) Calculations for heat conduction

(D) Basic refrigeration cycles

(E) Absorption systems

(*1*) Ammonia systems

(*2*) Lithium bromide systems

(*3*) Purgers

(*4*) Two stage steam absorption

(F) Steam jet and thermocouple systems

(G) Compression systems

(H) Multiple systems

(*1*) Cascade

(*2*) Multi-temperature

(I) Refrigerants

(*1*) Primary and secondary

(*2*) Qualities and properties

(*3*) Tables and data

(*4*) CFC and environmental issues

(J) Evaporators

(K) Metering devices and automatic controls

(*1*) High and low-side floats

(*2*) Automatic expansion valves

(*3*) Thermostatic expansion valves

(*4*) Manual expansion valves

(L) Condensers

(*1*) Construction and operation of air-cooled condensers

(*2*) Theory, operation and maintenance of water-cooled condensers

(M) Receivers and accessories

(*1*) Filters and driers

(*2*) Vibration isolators

(*3*) Distribution headers

(N) Cooling towers, and spray ponds

(O) Compressors

(*1*) Reciprocating

(*a*) Open type

(*b*) Serviceable and non-serviceable hermetic units

(*c*) Vertical and horizontal ammonia compressors

(*d*) High Speed freon compressors

(2) Rotary

(*3*) Centrifugal

(*a*) Hermetic and non-hermetic types

(*b*) Capacity control

(P) Prime movers

(*1*) Steam turbines

(*2*) Electric motors

(*3*) Absorber generators

(*a*) Steam powered

(*b*) Direct fired—combustion principles

(Q) Operation of valves and gauges

(R) Refrigerating systems oils and lubrication

(*1*) Qualities and characteristics

(*2*) Methods of compressor lubrication

(*3*) Lubricating system components

(*a*) Filters

(b) Pumps

(S) Secondary refrigerating systems

(*1*) Holdover tanks

(*2*) Congealing tanks

(*3*) Circulating pumps

(*4*) Operation and maintenance of brine system

(*5*) Significance of pH

(T) Regulatory and safety requirements

(*1*) *Department permit* and operator requirements, including FC606

(*2*) *Building Code* and *Mechanical Code* requirements, including ASHRAE Standard 15

(*3*) Clean Air Act Amendments and United States Environmental Protection Agency regulations

(*4*) *OSHA* regulations

(*5*) Impact of Local Law Nos. 5 of 1973, 16 of 1984, 41 of 1978, 58 of 1987, 26 of 2004 and 26 of 2008 on the operation of refrigerating systems

(*6*) Amendments to any of the foregoing

(U) Refrigerating system servicing (practical skills exercise/hands-on demonstrations)

(*1*) Selection and use of tools for diagnosis and servicing

(*a*) Gauges

(*b*) Thermometers

(*c*) Charging containers

(*d*) Vacuum pumps—system evacuation

(*2*) Charging and testing

(*a*) Critical charges

(*b*) Correct low and high-side operating pressure

(*c*) Use of gauge manifolds

(*3*) Moisture

(*a*) Its effects

(*b*) Removal of blotting and/or evacuation

(*c*) Use of desiccants and driers

(*4*) System troubleshooting and diagnosis procedures

(*5*) Leak repair and component replacement

(*a*) Copper tubing—cut, bend, sweat and flare

(*b*) Copper tubing and pipe, solder and braze

(*6*) Open type compressors

(*a*) Replace compressor valves and gaskets

(*7*) Hermetic compressor-motor units

(*a*) Testing hermetic-motor units for grounds, shorts, open windings

(*b*) Testing power pack components—overload protectors, relays

(*c*) Testing wiring harnesses

(V) Building operation, maintenance and recordkeeping. *Building Code*, Fire Code and *rule* requirements for building operation, maintenance and recordkeeping, as set forth in R113-12(c)(2).

(d) Course Administration and Completion

(1) The ratio of students to instructors in the practical skills exercise/hand-on demonstrations shall not exceed 8-to-1.

(2) Students must attend at least 25 hours of practical skills exercise/hands-on demonstrations, and not less than 95% of other required instructional training, to be eligible to take the training course final written examination.

§ 113-08 Commercial Cooking Exhaust Systems Certificates of Fitness

(a) Scope. This section sets forth standards, requirements and procedures for issuance of *certificates of fitness* to inspect and clean commercial cooking exhaust systems.

(b) General Provisions. Applicants for *certificates of fitness* for inspection and cleaning of commercial cooking exhaust systems shall meet the minimum qualifications and comply with the general requirements for a *certificate of fitness* as set forth in FC113 and R113-01.

(c) Special Qualifications for Precipitator Inspection and Cleaning. Applicants who intend to inspect and clean the precipitator component of commercial cooking exhaust systems shall obtain an endorsement on their *certificate of fitness* for each type of precipitator to be serviced.

(d) Special Application Requirements. In addition to the qualifications set forth in FC113, applicants shall possess and demonstrate to the satisfaction of the *Department* that they possess the training and knowledge necessary to properly inspect and clean the particular precipitators that they intend to service, and possess the manufacturer's specifications and servicing manuals for such precipitators.

§ 113-09 Non-Production Laboratory Certificates of Fitness

(a) Scope. This section sets forth standards, requirements and procedures for issuance of *certificates of fitness* for *non-production laboratories*.

(b) General Provisions. Applicants for *certificates of fitness* for *non-production laboratories* shall meet the minimum qualifications and comply with the general requirements for a *certificate of fitness* as set forth in FC113 and R113-01.

(c) Qualifications. In addition to the qualifications set forth in FC113, applicants for *non-production laboratory certificates of fitness* shall possess and demonstrate to the satisfaction of the *Department* that they have accumulated 60 college credits as a result of satisfactory completion of course work at a college or university accredited by an accrediting body recognized by the United States Secretary of Education and the Council

for Higher Education Accreditation. Of the 60 required credits, not less than 21 shall be in the field of engineering, chemistry, fire science or other *approved* field of study.

(d) Special Application Requirements. In addition to the applicable requirements set forth in FC113, applicants shall demonstrate to the satisfaction of the *Department* that they have received training relating to the safe storage, *handling* and use of *hazardous materials*, including training in the requirements of FC2706 and any *rules* promulgated pursuant to such section.

§ 113-10 Construction Site Fire Safety Manager Training Courses

(a) Scope. This section sets forth the minimum hours of classroom instruction and topics required for *Department* accreditation of training courses for *certificates of fitness* for construction site fire safety manager.

(b) General Provisions

(1) General accreditation requirements. Construction site fire safety manager training courses shall comply with the general training school accreditation procedures, standards and requirements set forth in R113-04.

(2) Instructor qualifications. Instruction in construction site fire safety manager training courses shall be conducted by persons with fire code, fire prevention/suppression, construction, engineering or other appropriate experience or expertise that qualifies them to teach the respective instructional topics of the training course.

(c) Required Hours and Topics of Instruction

(1) Training courses shall, at a minimum, provide not less than seven (7) hours of instruction.

(2) Training courses shall provide instruction in the following topics, and such other topics as the Department may from time to time designate by written notice to accredited training course providers:

(A) Introduction to the Fire Code and Fire Department Rules, including their organization and terminology.

(B) Fire Code *construction site* provisions (FC Chapter 14 and 3 RCNY Chapter 14).

(C) All *construction site* fire safety requirements, as set forth in 3 RCNY 1401-01(c).

(d) Course Administration and Completion

(1) Students must attend all training classes to be eligible to take the training course's final examination.

(2) Students shall be allowed two (2) opportunities to pass the final examination. Students who fail the final examination on the second attempt shall be required to reattend the course in its entirety.

§ 113-11 Construction Site Fire Safety Manager Certificates of Fitness

(a) Scope. This section sets forth standards, requirements and procedures for issuance of a *certificate of fitness* to perform the duties of a construction site fire safety manager.

(b) General Provisions. Applicants for construction site fire safety manager *certificates of fitness* shall meet the minimum qualifications and comply with the general requirements for a *certificate of fitness* set forth in FC113 and R113-01.

(c) Qualifications. In addition to the qualifications set forth in FC113 (including receipt of a passing grade on the *Department*'s written examination), applicants for construction site fire safety manager *certificate of fitness* shall possess and demonstrate to the satisfaction of the *Department* the physical ability to perform the duties of the position and the following qualifications:

(1) Certification or experience. Applicants shall hold or possess:

(A) A site safety manager or site safety coordinator certificate issued by the *Department of Buildings* pursuant to BC3310.5 and *Department of Buildings* rule 1 RCNY 104-08; or

(B) At least three (3) years of full-time experience within the past six (6) years prior to the date of the application:

(*1*) working for a governmental agency or a construction, design or consulting firm;

(*2*) at *construction sites* upon which "major buildings" (as that term is defined in BC3310.2) are being constructed; and

(*3*) with responsibility for *construction site* safety and/or supervision of construction; or

(C) At least eight (8) years of full-time experience within the past 12 years prior to the date of the application working for a governmental agency with responsibility for conducting and/or supervising fire code or fire safety inspections or enforcement; or

(D) At least ten (10) years of full-time experience within the past 15 years prior to the date of the *application* working as a firefighter or fire officer in a paid fire department.

(2) Training Course. Applicants shall successfully complete a *construction site fire safety manager* training course conducted by an educator or educational institution or program accredited by the *Department* pursuant to R113-04 and 113-10.

(d) Application Procedures. *Application* for a construction site fire safety manager *certificate of fitness* shall be made in accordance with R113-01.

§ 113-12 Building Operation, Maintenance and Recordkeeping Training Courses

(a) Scope. This section sets forth the minimum hours of classroom instruction and topics required for *Department* accreditation of training courses for building operations, maintenance and recordkeeping.

(b) General Provisions

(1) General accreditation requirements. Building operation, maintenance and recordkeeping training courses shall comply with the general training school accreditation procedures, standards and requirements set forth in R113-04.

(2) Instructor qualifications. Instruction in building operation, maintenance and recordkeeping training courses shall be conducted by persons with fire code, fire prevention, fire suppression, or other appropriate experience or expertise that qualifies them to teach the respective instructional topics of the training course.

(c) Required Hours and Topics of Instruction

(1) Training courses shall, at a minimum, provide not less than seven (7) hours of live instruction.

(2) Training courses shall provide instruction in the following Fire Code, *Building Code*, and *rule* requirements associated with building operations and maintenance;

(A) *permits*, *certificates of fitness*, and company certificates

(B) emergency planning and preparedness

(C) emergency power systems, including Chapter 8 of NFPA 110, and NFPA 111

(D) elevator in readiness

(E) refrigerating systems, including operator inspection after repair, monthly testing, and operator logbook.

(F) flame-resistant decorations

(G) *fire alarm systems*, including Chapter 10 of NFPA 72

(H) s*prinkler systems*, including Chapters 5, 8 and 9 of NFPA 25

(I) s*tandpipe systems*, including Chapters 6, 8 and 9 of NFPA 25

(J) *out-of-service sprinkler*, *standpipe* and *fire alarm systems*, including impairment coordinator, *fire guard* and notification requirements

(K) portable fire extinguishers

(L) *commercial cooking systems*

(M) smoke control systems

(N) non-water fire extinguishing systems

(O) *means of egress*, including *Building Code* required exit and elevator signage, and photoluminescent pathway markings

(P) *hot work* operations

(Q) *fumigation* and insecticidal fogging operations

(R) painting of *sprinkler* and *standpipe system* piping and valve handles in both new and existing buildings, as set forth in BC903.6 and 905.11

(S) stationary storage battery systems.

(d) Course Administration and Completion

(1) Students must attend all seven (7) hours of training to be eligible to take the training course's final examination.

(2) Students shall be allowed two (2) opportunities to pass the final examination. Students who fail the final examination on the second attempt shall be required to reattend the course in its entirety.

§ 114-01 Certificates of License

(a) Scope. This section sets forth standards, requirements and procedures for issuance of *certificates of license* for the installation, alteration, testing and repair of *automotive* and *marine liquid motor fuel storage and dispensing systems* and *flammable liquid* and *combustible liquid* storage systems.

(b) General Provisions

(1) Minimum qualifications and general requirements. Applicants for *certificates of license* shall meet the minimum qualifications and comply with the general requirements set forth in FC114 and this section. Holders of a *certificate of license* shall maintain all qualifications and comply with all requirements throughout the term of the certificate.

(2) Inspection of facilities

(A) All facilities maintained by *certificate of license* applicants and holders are subject to *Department* inspection. Such inspection may be conducted for any purpose related to the enforcement of the requirements of this section, including but not limited to verifying that the *certificate of license* applicant possesses such facilities and specialized equipment as may be required to perform the duties of business or activity requiring the *certificate of license*.

(B) Facility inspections conducted in connection with original or renewal *applications* for a *certificate of license* shall be conducted at the expense of the applicant, based on the fees set forth in FC Appendix A, plus reasonable travel expenses for facilities located outside of New York City.

(3) Agent for receipt of process. All applicants and certificate of license holders shall designate an agent located in New York City who is authorized to receive process on behalf of the company. The agent's designation shall provide that the service of process upon him or her shall confer personal jurisdiction over the certificate of license holder in any judicial or administrative proceeding or action. This provision shall not be construed to limit the parties upon whom, or manner by which, service may be effected in accordance with applicable law.

(4) Change of contact information. All applicants and certificate holders are required to promptly notify the *Department* of any change in the applicant's or certificate holder's address, telephone number and other contact information, and such other information as the *Department* may require.

(c) General Qualifications. The *Department* will grant an original or renewal *application* for a *certificate of license* where the applicant possesses and satisfactorily demonstrates to the *Department* that the applicant or certificate holder possesses the following qualifications:

(1) A driver's license, passport, birth certificate or other proof satisfactory to the *Department* that the applicant satisfies the minimum age requirement set forth in FC114.4;

(2) sufficient knowledge and experience in the business or activity requiring the *certificate of license* to competently and safely engage in such business or activity;

(3) the integrity and fitness to be responsible for performing duties affecting public safety;

(4) qualified staff and sufficient equipment and facilities to competently and safely perform the business or activity requiring the *certificate of license*;

(5) maintenance of the liability insurance policy required by the Fire Code or *rules*; and

(6) for original *applications* filed on or after February 15, 2000, a high school diploma, or its educational equivalent, approved by a state's Department of Education, or an approved accrediting organization.

(d) Special Qualifications. In addition to general qualifications set forth in R114-01(c), applicants for *certificates of license* shall possess and satisfactorily demonstrate to the *Department* that the applicant possesses the following qualifications:

(1) Automotive and marine liquid motor fuel storage and dispensing systems.

(A) A minimum of three (3) years work experience in the installation, alteration, testing or repair of automotive or marine liquid motor fuel storage and dispensing systems in the five (5) year period prior to the date of filing of such *application*. Such experience shall have been obtained working under the *general supervision* of a holder of a *certificate of license* holder for *automotive* or *marine liquid motor fuel storage and dispensing systems*.

(2) Flammable liquid and combustible liquid storage systems.

(A) A *certificate of license* for *automotive* and *marine liquid motor fuel storage and dispensing systems*;

(B) A minimum of three (3) years work experience in the installation, alteration, testing or repair of automotive or marine liquid motor fuel storage and dispensing systems in the five (5) year period prior to the date of filing of such *application*. Such experience shall have been obtained working under the *general supervision* of a holder of a *certificate of license* holder for *automotive* or *marine liquid motor fuel storage and dispensing systems*; or

(C) A minimum of three (3) years work experience in the installation, alteration, testing or repair of *flammable liquid* and *combustible liquid* storage systems in the five (5) year period prior to the date of filing of such *application*.

(e) General Application Requirements. Applicants for a *certificate of license* shall submit all information and documentation necessary or appropriate to establish their eligibility for issuance of such certificate in accordance with FC115 and this section.

(1) Application forms and information. Information relating to *certificate of license* requirements and *application* procedures, including *application* forms, may be obtained from the *Department*'s web site, www.nyc.gov/fdny, and from the Licensing Unit of the *Bureau of Fire Prevention*, Fire Department Headquarters, 9 MetroTech Center, 1st Floor, Brooklyn, NY 11201-3857.

(2) Submission. Original *applications* for *certificates of license* shall be filed in person with the Licensing Unit of the *Bureau of Fire Prevention*. Renewal certificate *applications* may be filed in person or by mail, except as may be otherwise specified by the *Department*.

(3) Incomplete applications. The *Department* reserves the right not to accept for filing any *application* that is incomplete or otherwise deficient, including any *application* that is submitted without the required supporting documentation or *application* fee. The *Department* will provide the applicant notice of any *application* that is not accepted, and, except for *applications* determined to be fraudulent, shall afford the applicant a reasonable time to correct or supplement such *application*. Original *applications* not corrected or supplemented within 30 days of being notified will be deemed abandoned.

(4) Examination. Applicants for an original *certificate of license* must obtain a passing score on the applicable examination administered by the *Department*.

(5) Identification. Applicants for an original *certificate of license* shall provide two (2) pieces of picture identification satisfactory to the *Department*, such as a

driver's license, passport or employee identification card. The *Department* reserves the right to require additional identification.

(6) Photographs. All applicants for an original *certificate of license* will be photographed by the *Department* for identification purposes. The *Department* may require a *certificate of license* holder filing for renewal of their certificate to report to the *Department* to be photographed. Failure to comply with such a notice constitutes grounds for non-renewal of the certificate. In lieu of, or in addition to, such photographs, the *Department* may require submission of two passport-size photographs in connection with an original or renewal *certificate of license application*.

(7) Fees. *Application* fees relating to *certificates of license* shall be as set forth in FC Appendix A or the *rules*. Except as otherwise authorized by the *Department*, fees shall be paid in cash, check or money order payable to the "New York City Fire Department."

(8) Applicants delinquent on child support payments. In accordance with the United States Social Security Act, 42 USC §666(a)(13), and New York State General Obligations Law §3-503, *applications* for original or renewal *certificates of license* will be reviewed for compliance of its principals and officers with child support obligations and will be denied when required by such laws when one (1) or more of such principals or officers has been identified by the Office of Child Support Enforcement of the New York City Human Resources Administration (or any successor agency) as delinquent on child support payments. The principals and officers of applicants for *certificates of license* will be required to disclose their social security numbers for purposes of such review.

(9) Original applications. *Applications* for a *certificate of license* shall include the following information and documentation, and such other information and documentation as the *Department* may require:

(A) The applicant's prior experience in the business or activity requiring the *certificate of license*, including the names and addresses of all companies with which such applicant has been employed or otherwise affiliated in the five-year period prior to the date of filing;

(B) A list of all federal, state, or local licenses or certificates issued to the applicant in the five-year period prior to the date of filing that authorize the applicant to engage in the business or activity requiring the *certificate of license*, or similar business or activity. A copy of each such license and certificate shall be included with the *application*;

(C) A list of its offices, *facilities* and any specialized equipment required to engage in the business or activity requiring the *certificate of license*;

(D) A copy of any and all violations, judgments, convictions and penalties issued to or entered against the applicant, in the five-year period prior the date of filing, relating to the business or activity requiring the *certificate of license*, or similar business or activity; or relating to the offering or receiving of a bribe or unlawful gratuity. A copy of the charges, pleadings, adjudications and certificates of disposition from any such civil or criminal proceeding shall be included with the *application*; and

(E) A list of any *permits* issued to the applicant, including the *Department* account numbers.

(F) The name, address and contact information for the agent for receipt of process required by R114-01(b)(3).

(10) Renewal applications. Renewal *applications* shall disclose any changes in the *certificates of license* holders, offices and *facilities*, and *permits*; disclose any violations, judgments, criminal convictions and penalties since the last date of filing; and include a copy of all current licenses and certificates.

(f) Examinations

(1) All written examinations will be administered by the Licensing Unit of the *Bureau of Fire Prevention* at Fire Department Headquarters, except as may be otherwise specified by the *Department* in the notice of examination or other appropriate notice.

(2) All examinations will be conducted in the English language.

(3) The subject matter of an examination, and, for any numerically-graded certificate examination, the passing grade, shall be as set forth on the *Department's* notice of examination. The passing grade shall be set at 70% unless otherwise specified in such notice of examination.

(4) An applicant will be provided written notice of his or her examination grade.

(5) An applicant who fails to obtain a passing grade on a written examination may re-take the examination, subject to the availability of *Department* resources and appointments. The required fee must be paid by the applicant each time he or she is administered an examination.

(g) General Insurance Requirements

(1) Except as may be otherwise required by the Fire Code or the *rules*, applicants for, and holders of, a *certificate of license* shall maintain a liability insurance policy in an amount not less than five hundred thousand dollars ($500,000), issued by an *approved* insurance company that is licensed to do business in New York State

and has a A.M. Best rating of A- or better. Employees of city agencies that require such certificate in connection with their official city duties and responsibilities shall be exempt from maintaining such liability insurance policy.

(2) Such liability policy shall provide insurance coverage in the event of any death, injury, damage or other loss to persons or property by reason of the business or activity requiring the *certificate of license*. Such coverage shall be at least as broad as that set forth in the most recent edition of ISO Form CG 0001, and shall include completed operations.

(3) The *Department* may relieve the holder of a *certificate of license* of the obligation to maintain the liability insurance policy required by this section if the certificate holder makes a written request to the *Department* to place its *certificate of license* in "Not in Use" (inactive) status, and the *Department* grants such request. The holder of the *certificate of license* shall not engage in any business or activity requiring the *certificate of license* while its certificate is in such "Not in Use" status, and shall not resume any such business or activity unless and until a written request has been made to the *Department* to restore such *certificate of license* to active status, together with proof of compliance with the liability insurance policy required by the Fire Code, the *rules* or this section, and the certificate is restored by the *Department* to active status.

(h) Misconduct. In addition to any other penalties provided by law, misconduct on the part of an applicant or holder of a *certificate of license* shall be grounds for denial, non-renewal, suspension or revocation of a *certificate of license*. Such misconduct includes, but is not limited to:

(1) the failure of a holder of a *certificate of license* to properly discharge the duties of such certificate, including failing to properly supervise the work being conducted such certificate;

(2) any false and fraudulent conduct in connection with an *application* for a *certificate of license* or the duties of a *certificate of license* holder, including:

(A) any false or fraudulent statement or submission; and

(B) any unauthorized alteration or use of a *certificate of license* or possession of any fraudulent *certificate of license*; and

(C) cheating on an examination; and

(D) impersonating another or allowing oneself to be impersonated;

(3) any other unlawful or unsafe conduct that bears on the integrity or reliability of an applicant or *certificate of license* holder;

(4) the failure to maintain the liability insurance policy required by the Fire Code, this section or the *rules*;

(5) the failure to promptly notify the *Department* of any change in the designated agent for receipt of process, pursuant to R114-01(b)(3), or applicant's or certificate holder's contact information, or any other notification required pursuant to R114-01(b)(4); or

(6) compromising the integrity or confidentiality of a *Department* examination.

§ 115-01 Company Certificates

(a) Scope. This section sets forth standards, requirements and procedures for issuance of company certificates, including *blasting contractor, central station, commercial cooking exhaust system servicing, fireworks contractor, fumigation and insecticidal fogging operation, portable fire extinguisher sales, portable fire extinguisher servicing, pyrotechnic supplier, smoke detector maintenance company certificates* and *ARC system* testing.

(b) General Provisions

(1) Minimum qualifications and general requirements. Applicants for *company certificates* shall meet the minimum qualifications and comply with the general requirements set forth in FC115 and this section. Companies to which a company certificate has been issued, their principals and officers, shall maintain all qualifications and comply with all requirements throughout the term of the certificate.

(2) Inspection of facilities

(A) All facilities maintained by company certificate applicants and holders are subject to *Department* inspection. Such inspection may be conducted for any purpose related to the enforcement of the requirements of this section, including but not limited to verifying that the company possesses such facilities and specialized equipment as may be required to perform the duties of business or activity requiring the company certificate.

(B) Facility inspections conducted in connection with original or renewal *applications* for a company certificate shall be conducted at the expense of the applicant, based on the fees set forth in FC Appendix A, plus reasonable travel expenses for facilities located outside of New York City.

(3) Agent for receipt of process. All applicants and certificate holders shall designate an agent located in New York City who is authorized to receive process on behalf

of the company. The agent's designation shall provide that the service of process upon him or her shall confer personal jurisdiction over the company in any judicial or administrative proceeding or action. This provision shall not be construed to limit the parties upon whom, or manner by which, service may be effected in accordance with applicable law.

(4) Change of contact information. All applicants and certificate holders are required to promptly notify the *Department* of any change in the applicant's or certificate holder's address, telephone number and other contact information, and such other information as the *Department* may require.

(c) General Qualifications. The *Department* will grant an original or renewal *application* for a company certificate where the applicant possesses and satisfactorily demonstrates to the *Department* that the company, its principals and officers, possess the following qualifications:

(1) sufficient knowledge and experience in the business or activity requiring the company certificate to competently and safely engage in such business or activity, including one (1) or more principals or officers holding a *certificate of fitness* for such business or activity, where such *certificate of fitness* is required by the Fire Code or *rules*;

(2) the integrity and fitness to be responsible for performing duties affecting public safety;

(3) qualified staff and sufficient equipment and facilities to competently and safely perform the business or activity requiring the company certificate, including, where the company certificate is for the servicing of equipment, the manufacturer's servicing manuals; and

(4) maintenance of the liability insurance policy required by the Fire Code or *rules*.

(d) Special Qualifications. In addition to general qualifications set forth in R115-01(c), applicants for the following company certificates shall possess and satisfactorily demonstrate to the *Department* that the company, its principals and officers, possess the following qualifications:

(1) Blasting contractor certificates

(A) The company shall possess all licenses and other approvals required by the Bureau of Alcohol, Tobacco, Firearms and Explosives of the United States Department of Justice.

(B) One (1) or more principals or officers of the company shall hold a *certificate of fitness* for blasting operations, or a *certificate of fitness* for blasting assistant, except, where the company only conducts blasting

operations involving five (5) pounds or less of explosives, one (1) or more principals or officers may, in lieu of holding such certificate, have a minimum of two (2) years' experience in construction activities involving blasting operations.

(2) Central station certificate of operation.

(A) The *central station company* shall have been *listed* or otherwise shall have been approved by a nationally-recognized testing laboratory as a *central station*, or equivalent.

(3) Fireworks contractor certificates

(A) One (1) or more principals or officers of the company shall hold a *certificate of fitness* for fireworks displays.

(B) One (1) or more principals or officers of the company shall have a minimum of two (2) years' experience in conducting legal fireworks displays.

(4) Fumigation and thermal insecticidal fogging operations company certificates

(A) One (1) or more principals or officers of the company shall have a minimum of two (2) years' experience in fumigation and thermal insecticidal fogging operations.

(5) Portable fire extinguisher sales company certificates

(A) One (1) or more principals or officers of the company shall hold a *certificate of fitness* for portable fire extinguisher sales.

(6) Portable fire extinguisher servicing company certificates

(A) One (1) or more principals or officers of the company shall have a minimum of two (2) years' experience in portable fire extinguisher servicing and hold a c*ertificate of fitness* for portable fire extinguisher servicing.

(B) The company shall possess the tools, materials, equipment, facilities and servicing manuals specified in Chapter 7 of NFPA 10 to service portable fire extinguishers.

(7) Smoke detector maintenance company certificates

(A) The company is listed as a fire alarm service organization by a national testing laboratory, or is an authorized smoke detector service company for a smoke detector manufacturer.

(B) One (1) or more principals or officers of the company holds a license to engage in the business of installing, servicing and maintaining fire alarm systems, issued by the New York Secretary of State pursuant to Article 6-D of the New York State General Business Law, or is a master electrician licensed by the *Department of Buildings* and registered with the New York Secretary of State in accordance with such Article 6-D.

(C) One (1) or more principals or officers of the company has received Level II certification in fire alarm systems from the National Institute for Certification in Engineering Technologies (NICET).

(8) *ARC system* testing company certificates.

(A) One (1) or more principals or officers of the company shall hold a General Radiotelephone Operator License issued by the *FCC* pursuant to 47 CFR Part 90.

(e) General Application Requirements. Applicants for a company certificate shall submit all information and documentation necessary or appropriate to establish their eligibility for issuance of such certificate in accordance with FC115, this section and the *rules*.

(1) Application forms and information. Information relating to company certificate requirements and *application* procedures, including *application* forms, may be obtained from the *Department*'s web site, www.nyc.gov/fdny, and from the Licensing Unit of the *Bureau of Fire Prevention*, Fire Department Headquarters, 9 MetroTech Center, 1st Floor, Brooklyn, NY 11201-3857.

(2) Submission of applications. Original *applications* for company certificates shall be filed in person with the Licensing Unit of the *Bureau of Fire Prevention*. Renewal certificate *applications* may be filed in person or by mail, except as may be otherwise specified by the *Department*.

(3) Incomplete applications. The *Department* reserves the right not to accept for filing any *application* that is incomplete or otherwise deficient, including any *application* that is submitted without the required supporting documentation or *application* fee. The *Department* will provide the applicant notice of any *application* that is not accepted, and, except for *applications* determined to be fraudulent, shall afford the applicant a reasonable time to correct or supplement such *application*. Original *applications* not corrected or supplemented within 30 days of being notified will be deemed abandoned.

(4) Identification. Applicants for an original company certificate shall provide two (2) pieces of picture identification satisfactory to the *Department*, such as a driver's license, passport or employee identification card. The *Department* reserves the right to require additional identification.

(5) Photographs. All applicants for an original company certificate will be photographed by the *Department* for identification purposes. The *Department* may require a company certificate holder filing for renewal of their certificate to report to the *Department* to be photographed. Failure to comply with such a notice constitutes grounds for non-renewal of the certificate. In lieu of, or in addition to, such photographs, the *Department* may require submission of two passport-size photographs in connection with an original or renewal company certificate *application*.

(6) Fees. *Application* fees relating to company certificates shall be as set forth in FC Appendix A and the *rules*. Except as otherwise authorized by the *Department*, fees shall be paid in cash, check or money order payable to the "New York City Fire Department."

(7) Applicants delinquent on child support payments. In accordance with the United States Social Security Act, 42 USC §666(a)(13), and New York State General Obligations Law §3-503, *applications* for original or renewal company certificates will be reviewed for compliance of its principals and officers with child support obligations and will be denied when required by such laws when one (1) or more of such principals or officers has been identified by the Office of Child Support Enforcement of the New York City Human Resources Administration (or any successor agency) as delinquent on child support payments. The principals and officers of applicants for company certificates will be required to disclose their social security numbers for purposes of such review.

(8) Original applications. *Applications* for a company certificate shall include the following information and documentation, and such other information and documentation as the *Department* may require:

(A) A list of all principals and officers of the company, and their prior experience in the business or activity requiring the company certificate, including the names and addresses of all companies with which such principals and officers have been employed or otherwise affiliated in the five-year period prior to the date of filing;

(B) A list of all federal, state, or local licenses or certificates issued to such company, its principals or officers, in the five-year period prior to the date of filing, that authorize such company or its principals or officers to engage in the business or activity requiring the company certificate, or similar business or activity. A copy of each such license and certificate shall be included with the *application*;

(C) A list of its offices, *facilities* and any specialized equipment required to engage in the business or activity requiring the company certificate;

(D) A roster of the *certificate of fitness* holders who will be working under the company certificate, including their names and *certificate of fitness* numbers;

(E) A copy of any and all violations, judgments, convictions and penalties issued to or entered against the company, its principals and officers, in the five-year period prior the date of filing relating to the business or activity requiring the company certificate, or similar business or activity, or relating to the offering or receiving of a bribe or unlawful gratuity. A copy of the charges, pleadings, adjudications and certificates of disposition from any such civil or criminal proceeding shall be included with the *application*;

(F) A list of any *permits* issued to the company, its principals or officers, including the *Department* account numbers; and

(G) The name, address and contact information for the agent for receipt of process required by R115-01(b)(3).

(9) Renewal *applications*. Renewal *applications* shall disclose any changes in the company's principals and officers, offices and *facilities*, roster of *certificate of fitness* holders, and *permits*; disclose any violations, judgments, criminal convictions and penalties since the last date of filing; and include a copy of all current licenses and certificates.

(f) Special Application Requirements. In addition to the general *application* requirements set forth in R115-01(e), *applications* for the following company certificates shall include the following information and documentation:

(1) Central station certificates of operation. Applicants for such a company certificate shall include a copy of the listing or approval required by R115-01(d)(2)

(2) Fireworks contractor certificates. *Application* for such a company certificate shall include a list of the *fireworks displays* conducted by the company, its principals or officers, in the three-year period prior to the date of filing, setting forth the date and location of such *fireworks displays*, and the number and types of fireworks discharged, including proof satisfactory to the *Department* that the company, its principals or officers, have safely conducted *fireworks displays* in urban or other confined settings comparable to those found in New York City;

(3) Portable fire extinguisher servicing company certificates. *Application* for such a company certificate shall include a list of any other *portable fire extinguisher servicing company certificate* holders that will be performing services on behalf of the applicant in connection with the servicing of portable fire extinguishers, including a copy of the written agreement between such companies.

(4) ARC system testing company certificates. Application for such a company certificate shall include:

(A) a list of the *ARC systems*, or other in-building radio communication systems, installed and/or tested by the company, its principals or officers, in the three-year period prior to the date of filing, including the addresses of the buildings in which such systems were installed and/or tested and the dates of such installation and/or testing;

(B) documentation of any enforcement action taken by *FCC* or other governmental authority with respect to an *FCC* General Radiotelephone Operator License or other radio communication-related license or permit held or formerly held by any principal or officer of the company in the five-year period prior to filing;

(C) a request, in a form approved by the *Department*, for *Department* approval to purchase two (2) or more portable radios of the type utilized by *Department* personnel, and for *Department* programming of such portable radios to operate on radio frequencies licensed by the *FCC* to the City of New York, solely for purposes of the company certificate holder's testing of *ARC systems*; and

(D) A written agreement, executed by a principal or officer of the company, in the form specified by the *Department*, that sets forth terms and conditions for use, by the company and its personnel, of portable radios that operate on Department frequencies, including compliance with FCC regulations and other applicable, laws, rules and regulations, and the authority of the *Department* to direct the company and its personnel to immediately discontinue operating on the frequencies and to submit the company's portable radios to the *Department* for removal of *Department* programming.

(g) General Insurance Requirements

(1) Except as may be otherwise required by the Fire Code or the *rules*, applicants for, and holders of, a company certificate shall maintain a liability insurance policy in an amount not less than five hundred thousand dollars ($500,000), issued by an *approved* insurance company that is licensed to do business in New York State and has an A.M. Best rating of A- or better.

(2) Such liability policy shall provide insurance coverage in the event of any death, injury, damage or other loss to persons or property arising from the conduct of the business or activity requiring the company certificate. Such coverage shall be at least as broad as that set forth in the edition of ISO Form CG 0001 most recently published as of the time coverage is obtained, and shall include completed operations.

(3) The *Department* may relieve the holder of a company certificate of the obligation to maintain the liability insurance policy required by this section if the certificate holder makes a written request to the *Department* to place its company certificate in "Not in Use" (inactive) status, and the *Department* grants such request. The holder of the company certificate shall not engage in any business or activity requiring the company certificate while its certificate is in such "Not in Use" status, and shall not resume any such business or activity unless and until a written request has been made to the *Department* to restore such company certificate to active status, together with proof of compliance with the liability insurance policy required by the Fire Code, the *rules* or this section, and the certificate is restored by the *Department* to active status.

(h) Special Insurance Requirements. In addition to the general insurance requirements set forth in R115-01(g), applicants for, and holders of, the following company certificates shall comply with the following insurance requirements:

(1) Blasting contractor certificates. Applicants for, and holders of, *blasting contractor certificates* shall maintain a liability insurance policy in an amount not less than five million dollars ($5,000,000). Such insurance policy shall name the City of New York and the New York City Fire Department as additional insured parties, provide that the limit of coverage applicable to the named insured is equally applicable to the additional insured parties, and shall provide for notice to the *Department* at least thirty (30) days prior to any cancellation or termination of such policy. Such insurance policy shall provide coverage at least as broad as set forth in the most recent edition of ISO Forms CG 2012 or CG 2026.

(2) Fireworks contractor certificates. Applicants for, and holders of, *fireworks contractor certificates* shall maintain a liability insurance policy in an amount not less than two million dollars ($2,000,000). Such insurance policy shall name the City of New York and the New York City Fire Department as additional insured parties, provide that the limit of coverage applicable to the named insured is equally applicable to the additional insured parties, and shall provide for notice to the *Department* at least thirty (30) days prior to any cancellation or termination of such policy. Such insurance policy shall provide coverage at least as broad as set forth in the most recent edition of ISO Forms CG 2012 or CG 2026.

(i) Misconduct. In addition to any other penalties provided by law, misconduct on the part of a company that is applying for, or holds, a company certificate, and/or its principals or officers, shall be grounds for denial, non-renewal, suspension or revocation of a company

certificate, and/or any other *Department* certificates held by the principals or officers of the company. Such misconduct includes, but is not limited to:

(1) the failure of a holder of a company certificate, its principals or officers, to properly discharge the duties of such certificate, including failing to properly supervise the work being conducted such certificate;

(2) any false and fraudulent conduct in connection with an *application* for a company certificate or the duties of a company certificate holder, including:

(A) any false or fraudulent statement or submission; and

(B) any unauthorized alteration or use of a company certificate or possession of any fraudulent company certificate;

(3) any other unlawful or unsafe conduct that bears on the integrity or reliability of an applicant or company certificate holder, its principals or officers;

(4) the failure to maintain the liability insurance policy required by the Fire Code or the *rules*;

(5) the failure to obtain or maintain any license or other approval required by a federal, state or City agency to engage in the business or activity requiring the company certificate;

(6) the failure to promptly notify the *Department* of any change in the designated agent for receipt of process, pursuant to R115-01(b)(3), or applicant's or certificate holder's contact information, or any other notification required pursuant to R115-01(b)(4);

(7) misrepresenting the company, its principals, officers or employees, to be *Department* officials, employees or agents, including representing that the company, its principals, officers or employees, possess the authority to enforce the Fire Code or the *rules*, or wearing the uniform or insignia of the *Department* or similar attire or insignia that may mislead the public; or

(8) with respect to portable fire extinguisher sales company certificates required for persons engaged in the business of selling portable fire extinguishers door-to-door, to sell, offer for sale or otherwise provide to the *owner* of buildings or businesses, for use on their *premises*, any portable fire extinguisher for a particular occupancy or use, when such portable fire extinguisher is no longer approved for such occupancy or use and/or would not be in compliance with the portable fire extinguisher requirements for such occupancy or use set forth in the Fire Code or the *rules*.

§ 116-01 Expeditor Registration

(a) Scope. This section sets forth standards, requirements and procedures for the registration of expeditors pursuant to FC116.

(b) General Provisions

(1) General requirements. Expeditors shall register in compliance with the requirements of FC116 and this section.

(2) Time for registration. Expeditors shall register at least two (2) weeks prior to engaging in expediting activities regulated by FC116.

(3) Change of contact information. All registrants are required to promptly notify the *Department* of any change in the registrant's address, telephone number and other contact information, and such other information as the *Department* may require.

(c) Registration Standards. The *Department* will register an expeditor for the purposes of FC116 where the expeditor possesses and satisfactorily demonstrates to the *Department* that he or she possesses the integrity and fitness to engage in the submission, filing, requesting, negotiating or otherwise seeking approval of *applications* for issuance of *permits*, design and installation documents and other *Department* approvals, given that such approvals affect public safety.

(d) Registration Requirements

(1) Registration forms and information. Information relating to expeditor registration requirements and procedures, including registration forms, may be obtained from the *Department*'s web site, www.nyc.gov/fdny, and from the Licensing Unit of the *Bureau of Fire Prevention*, Fire Department Headquarters, 9 MetroTech Center, 1st Floor, Brooklyn, NY 11201-3857.

(2) Submission. Expeditor registrations shall be filed in person with the Licensing Unit of the *Bureau of Fire Prevention*. Renewal registrations may be filed in person or by mail, except as may be otherwise specified by the *Department*.

(3) Incomplete registration forms. The *Department* reserves the right not to accept for filing any registration form that is incomplete or otherwise deficient, including any registration form that is submitted without the required supporting documentation or registration fee. The *Department* will provide an expeditor notice of any registration that is not accepted, and, except for registrations determined to be fraudulent, shall afford the expeditor a reasonable time to correct or supplement such registration. Original registration forms not corrected or supplemented within 30 days of being notified will be deemed abandoned.

(4) Identification. Expeditors seeking to file an original registration form shall provide two (2) pieces of picture identification satisfactory to the *Department*, such as a driver's license, passport or employee identification card. The *Department* reserves the right to require additional identification.

(5) Photographs. All expeditors filing an original registration form will be photographed by the *Department* for identification purposes. The *Department* may require an expeditor filing for renewal of their registration to report to the *Department* to be photographed. Failure to comply with such a notice constitutes grounds for non-renewal of the registration. In lieu of, or in addition to, such photographs, the *Department* may require submission of two passport-size photographs in connection with an original or renewal registration form.

(6) Fees. Expeditor registration fees shall be as set forth in FC Appendix A or the *rules*. Except as otherwise authorized by the *Department*, fees shall be paid in cash, check or money order payable to the "New York City Fire Department."

(7) Expeditor registrants delinquent on child support payments. In accordance with the United States Social Security Act, 42 USC §666(a)(13), and New York State General Obligations Law §3-503, expeditor registrations will be reviewed for compliance with child support obligations and will be denied when required by such laws when the registrant has been identified by the Office of Child Support Enforcement of the New York City Human Resources Administration (or any successor agency) as delinquent on child support payments. Expeditors will be required to disclose their social security numbers on their registration forms for purposes of such review.

(8) Original registrations. Expeditors seeking to register with the *Department* shall submit the following information and documentation, and such other information and documentation as the *Department* may require:

(A) A resume or other documentation indicating prior experience as an expeditor in connection with matters before the *Department* or other federal, state or local governments, including the names and addresses of any employers;

(B) A list of all federal, state, or local licenses or certificates issued to such company, its principals or officers, in the five-year period prior to the date of filing, that authorize the expeditor to engage in a profession, business or other regulated activity. A copy of each such license and certificate shall be included with the registration; and

(C) A copy of any and all violations, judgments, convictions and penalties issued to or entered against the registrant in the five-year period prior the date of filing, in connection with his or her expediting business and activity, any business or activity regulated by the *Department*, or the

offering or receiving of a bribe or unlawful gratuity. A copy of the charges, pleadings, adjudications and certificates of disposition from any such civil or criminal proceeding shall be included with the *application*.

(9) Renewal registrations. Renewal *applications* shall disclose any changes in the company's principals and managers; disclose any violations, judgments, criminal convictions and penalties since the last date of registration; and include a copy of all current licenses and certificates.

(e) Misconduct. In addition to any other penalties provided by law, misconduct on the part of an expeditor shall be grounds for non-acceptance, non-renewal, suspension or revocation of registration. Such misconduct includes, but is not limited to:

(1) any false or fraudulent conduct in connection with registration as an expeditor, including:

(A) any false or fraudulent statement or submission; and

(B) any unauthorized alteration or use of a certificate or possession of any fraudulent certificate;

(2) any false or fraudulent conduct in connection with an *application* for a *permit*, approval of a design or installation document, or other *Department* approval, including but not limited to:

(A) any false statement or submission;

(B) knowingly or negligently misleading or failing to disclose facts material to the determination of any such *application*;

(C) impersonating another or allowing oneself to be impersonated.

(3) the destruction or removal from *Department premises* of official *Department* records or other *Department* property;

(4) the offer or receipt of a bribe or unlawful gratuity, or any other unlawful conduct that bears on the integrity of the expeditor;

(5) the failure to report any conviction of a criminal offense relating to false or fraudulent submissions to any governmental agency, the offering or receiving of a bribe or unlawful gratuity, or in connection with the registrant's expediting business or activity;

(6) the provision of assistance or other participation in the misconduct of any other individual, including individuals exempt from expeditor registration requirements

pursuant to FC116.1, in relation to any *application* to, or other dealings with, the *Department*; and

(7) the failure to promptly notify the *Department* of any change in the registrant's contact information, or an other notification required pursuant to R116-01(b)(2).

§ 117 Reserved

CHAPTER 2
DEFINITIONS

§201 Reserved
§202-01 Definitions

§ 201 Reserved

§ 202-01 Definitions

(a) Scope. This section sets forth or references definitions for terms used in the *rules*.

(b) General Provisions

(1) Terms defined in the Fire Code. Unless otherwise expressly stated, terms used in the *rules* that are defined in the Fire Code shall have the meanings ascribed to them in the Fire Code definitions.

(2) Terms defined in the rules. Unless otherwise expressly stated, terms used in the *rules* shall have the meanings ascribed to them in the definitions set forth in this section or in the other sections of the *rules* referenced in this section.

(3) Other words and terms. Words and terms other than defined terms shall be interpreted in accordance with the provisions of FC201.

(4) Identification of defined terms. Terms defined in the Fire Code or the *rules* appear in the *rules* in *italics*.

(5) Identification of rule sections. A capital letter "R" preceding any number in the *rules*, e.g., R201-01(b), shall indicate that reference is being made to a section of the *rules* or subdivision thereof.

(c) Definitions

Administrative Code. New York City Administrative Code.

Alarm service. See R901-01(b).

Approved central station company. See R901-01(b).

Asphalt melter. An *approved* device designed to heat asphalt, typically for waterproofing operations, that, utilizing a *flammable gas* or a *combustible liquid*, generates an enclosed flame that indirectly heats a vessel containing the asphalt.

Bureau of Fire Prevention. Bureau of Fire Prevention of the New York City Fire Department.

Central station company. See R901-01(b).

Central station signaling system. See R901-01(b).

Core building system. Reserved.

Department of Buildings. New York City Department of Buildings.

Department of Consumer Affairs. New York City Department of Consumer Affairs.

Designated representative. See R901-01(b).

Designated smoking room. See R310-01(b).

ECB. See R109-01(b).

Electrical Code. The New York City Electrical Code.

Department of Environmental Protection. New York City Department of Environmental Protection.

Fire Prevention Code. The New York City Fire Prevention Code, repealed effective July 1, 2008 by New York City Local Law No. 26 of 2008.

Flammable plastic foam product. See R315-01(b).

gpm. Gallons per minute.

Inspector's test connection. See R903-01(b).

Letter of approval. Reserved.

Mandatory system. See R901-01(b).

Mobile CNG motor fuel system. See R2208-01(b).

Mobile CNG cascade. See R2208-01(b).

Natural gas. A mixture of hydrocarbon gases and vapors, consisting principally of methane in gaseous form.

Notice of disposal. See R104-03(b).

Notice of seizure. See R104-03(b).

Notice of violation. See R109-01(b).

OATH. See R4900-01(b).

Piped natural gas. *Natural gas* supplied by means of piping connected to a public utility distribution system.

Plumber. A licensed master plumber, as that term is defined by the *Building Code*, or a person working under the direct and continuing supervision of a licensed master plumber, as authorized by said code.

Pre-existing (facility or condition). See R102-01(b).

Pressure reducing devices. See R905-01(b).

Pressure restrictors. See R905-01(b).

Professional certification. Reserved.

Proprietary central station. See R901-01(b).

Proprietary signaling system. See R901-01(b).

psi. Pounds per square inch.

psig. Pounds per square inch gauge.

Runner service. See R901-01(b).

Subscriber. See R901-01(b).

Tar kettle. A device designed to heat tar, asphalt, pitch or similar materials, typically for waterproofing operations, that, utilizing a *flammable gas* or a *combustible liquid*,

generates a flame to heat a vessel containing such a material. *Tar kettle* does not include *asphalt melters*.

Terminal. See R901-01(b).

Transmitter. See R901-01(b).

Voluntary system. See R901-01(b).

Window/egress gate. See R1025-01(b).

CHAPTER 3
GENERAL PRECAUTIONS AGAINST FIRE

§301-01	Marinas
§302	Reserved
§303-01	Liquid–Fueled Tar Kettles and Asphalt Melters
§304-306	Reserved
§307-01	Coke-Fueled Salamanders
§308-01	Use of Open Flames in Group A Occupancies and Similar Public Gathering Places
§309	Reserved
§310-01	Designated Smoking Rooms in Hospitals, Nursing Homes, Rehabilitation Facilities and Similar Medical Facilities Housing the Ill, Aged and Infirm
§310-02	Design of "No Smoking" Signs
§311-312	Reserved
§313-01	Sale of Kerosene Space Heaters
§314-01	Indoor Display of Motor Vehicles and Watercraft
§315-01	Storage of Flammable Plastic Foam Products
§316-324	Reserved

§ 301-01 Marinas

(a) Scope. This section sets forth requirements for the supervision of marinas mooring or storing more than five (5) marine vessels or watercraft 65 feet or less in length.

(b) General Provisions

(1) Supervision

(A) Every *facility* regulated by this section shall at all times during *regular business hours* be under the *personal supervision* of a person holding a

certificate of fitness. Such individual shall be responsible for ensuring compliance with the requirements of this section.

(B) Where watercraft berthed in a *facility* regulated by this section are occupied overnight, a *fire watch* shall be maintained at all times other than *regular business hours*. A watchman time detector and watchman service shall be provided on a 24 hour basis. Such watchman shall hold a *certificate of fitness* as a *fire guard* and shall make hourly rounds to each of the stations. Records of these rounds shall be maintained.

§ 302 Reserved

§ 303-01 Liquid-Fueled Tar Kettles and Asphalt Melters

(a) Scope. This section sets forth requirements for the storage, *handling* and use of *liquid*-fueled *tar kettle*s and *asphalt melters*.

(b) General Provisions

(1) Prohibition. It shall be unlawful to use *tar kettles* and *asphalt melters* that utilize a *flammable liquid* as a fuel.

(2) Storage, handling and use. *Liquid* fueled *tar kettles* and *asphalt melters* that utilize a *combustible liquid* as a fuel shall be stored, *handled* and used in the same manner as *LPG*-fueled *tar kettles*, in compliance with FC303 and R3809-01(j)(2)(F).

§ 304-306 Reserved

§ 307-01 Coke-Fueled Salamanders

(a) Scope. This section sets forth requirements for the storage, *handling* and use of *coke* and *coke-fueled salamanders* at *construction sites*.

(b) General Provisions. *Coke* and *coke-fueled salamanders* shall be stored, *handled* and used in compliance with the requirements of FC307.6 and this section.

(1) Permits. Pursuant to FC105.6, a *permit* shall be obtained from the *Department* prior to the storage, *handling* or use of *coke-fueled salamanders* at a *construction site*.

(2) Supervision. Pursuant to FC307.6, the *handling* or use of *coke* and *coke-fueled salamanders* at a *construction site* shall be under the *personal supervision* of a *certificate of fitness* holder. The storage of *coke* and *coke-fueled salamanders* at a *construction site* shall be under the *general supervision* of a *certificate of fitness* holder. The c*ertificate of fitness* holder shall ensure that the *coke* and *coke-fueled salamanders* are safely stored, *handled* and used in compliance with the requirements of this section.

(c) Prohibitions. It shall be unlawful to:

(1) use a *coke-fueled salamander* at any location other than a *construction site* at which construction work is being performed pursuant to a work permit issued by the *Department of Buildings*;

(2) use a *coke-fueled salamander* at a construction site where the *sprinkler system* and/or *standpipe system* required by the *Building Code* is out of service, or any part of such system is out of service, in the area in which *coke* or *coke-fueled salamanders* are being *handled* or used;

(3) use a *coke-fueled salamander* for purposes of human comfort, or any other purpose other than construction-related drying or curing;

(4) store, *handle* or use a *coke-fueled salamander* at a *construction site* without a *permit*;

(5) store, *handle* or use *coke* or a *coke-fueled salamander* at a *construction site* without the requisite supervision;

(6) use a *flammable liquid*, *combustible liquid* or any other type of accelerant to ignite or reignite the *coke*;

(7) use a *coke-fueled salamander* at a construction site in any of the following locations:

(A) on a scaffold;

(B) in any occupied building;

(C) on any floor where *hazardous materials* are stored or are in use;

(D) on any floor that is of combustible construction;

(E) within ten (10) feet of any wall opening of an adjoining occupied building; or

(F) within 50 feet of any building occupied for educational, health care or religious purposes, place of assembly or other place of public gathering.

(d) Design and Installation Requirements. *Coke-fueled salamanders* shall consist of a metal vessel, inner grate and ash pan, which shall be fabricated in compliance with the following requirements:

(1) The vessel and inner grate shall be designed and fabricated with sufficient strength to support the weight of the *coke*, and with sufficient durability to withstand repeated exposure to the heat generated by the burning *coke*.

(2) The vessel shall be designed and fabricated:

(A) of metal not less than 18 gauge in thickness, with welded joints;

(B) with a diameter that does not exceed 17 inches, a height that does not exceed 20 inches and a height to diameter ratio that does not exceed 1.18;

(C) to be supported by sturdy metal legs, welded to the vessel, that are designed to maximize stability and reduce the potential for tipping, and that do not extend more than 12 inches from the bottom of the vessel.

(3) The inner grate shall be fabricated of metal of substantial gauge, and installed or securely rest at the base of the vessel so as to securely hold the *coke* to be burned.

(4) The ash pan shall be fabricated of sheet metal, with not less than a two (2) inch lip on all sides to contain the ash. The ash pan shall extend at least two (2) feet beyond the salamander in all directions.

(e) Operational Requirements. *Coke-fueled salamanders* shall be operated and maintained in compliance with the following requirements:

(1) *Coke-fueled salamanders* in use shall be placed at least ten (10) feet from combustible material, except that such salamanders may be placed not less than 24 inches from wooden column form work or such further distance as will ensure that the form work does not attain temperatures equal to or greater than 194 degrees Fahrenheit and is not charred.

(2) The ash pan shall be placed and positioned under the salamander. A layer of moistened sand shall be placed in the ash pan prior to use of the *coke-fueled salamander*. The ash pan shall be regularly emptied, so as to prevent ash from spilling over the lip of the ash pan.

(3) *Coke-fueled salamanders* shall be loaded with *coke* to not more than two-thirds (2/3) of the vessel's capacity, and ignited by the *certificate of fitness* holder using

an approved *LPG*-fueled torch having an *LPG* container capacity of not more than 20 pounds.

(4) *Coke-fueled salamanders* that become damaged or unsafe to use shall be immediately extinguished and removed from the premises or, if repairable, shall be restored to a safe condition before being returned to use.

(5) *Coke-fueled salamanders* shall only be used in areas with sufficient quantities of fresh air so as to maintain carbon monoxide below levels required by Federal, State and City laws, rules and regulations. The *certificate of fitness holder* shall inspect and conduct the required monitoring in such areas not fewer than once an hour when *coke salamanders* are in use, to ensure that carbon monoxide levels are being maintained below such levels.

(6) *Coke* shall be stored in an approved metal bin when not being burned in a salamander. The storage bin shall be located at least ten (10) feet from any *coke-fueled salamanders* that are in use.

(7) Tarpaulins used to retain heat in areas in which *coke-fueled salamanders* are in use shall be:

(A) made of materials that are inherently flame-resistant or treated to be flame-resistant;

(B) securely fastened to prevent movement caused by the wind; and

(C) placed not less than ten (10) feet from any *coke-fueled salamander*.

(8) Any areas in which *coke-fueled salamanders* are in use shall be adequately lighted to allow safe operation of the *coke-fueled salamanders* and to minimize the risk of accidental contact from construction activity on the *construction site*. Any electrical wiring or devices shall be installed in accordance with the *Electrical Code*.

(9) *Coke-fueled salamanders* in use shall be inspected on a periodic basis by the *certificate of fitness* holder. Inspections shall be conducted as frequently as necessary to ensure the safe operation of the *coke-fueled salamanders* but in no circumstance less than once an hour.

(f) Portable Fire Extinguisher Requirements. Areas in which *coke-fueled salamanders* are in use shall be provided with portable fire extinguishers with at least a 4-A rating for each 1000 square feet, with a maximum travel distance to an extinguisher of not more than 75 feet.

(g) Recordkeeping. Periodic inspections of *coke-fueled salamanders* required to be conducted by the *certificate of fitness* holder, and any corrective action taken, shall be

recorded in a bound log book maintained at the *construction site*. The log book shall be made available for inspection by any *Department* representative.

§ 308-01 Use of Open Flames in Group A Occupancies and Similar Public Gathering Places

(a) Scope. This section sets forth standards, requirements and procedures for the use in *Group A occupancies* and similar public gathering places of *open flames* and *open-flame devices*.

(b) Definitions. The following term shall, for purposes of this section and as used elsewhere in the *rules*, have the meaning shown herein:

Open-flame decorative device. An *open-flame device* used for decorative or lighting purposes, including wall-mounted candles, torch sconces, insect-repellent candles, tabletop candles and lamps, free-standing torch holders and candelabras, and similar devices.

(c) General Provisions

(1) Use of open flames and open-flame devices. *Open flames* and *open-flame devices* shall be *handled* and used in compliance with the requirements of FC308 and this section.

(2) Open flame permits

(A) Pursuant to FC105.6, a *permit* shall be obtained for the use of *open flames* in any *Group A occupancy*, in any covered mall and in any other indoor public gathering place (including any outdoor area ancillary to such occupancy or gathering place, such as a courtyard, rear yard, rooftop or sidewalk).

(B) *Applications* for *open flame permits* shall identify the types of *open flames* and *open-flame devices* proposed to be used on the *premises*, and the locations at which they are to be used.

(C) *Applications* for *open flame permits* will be denied if violations are outstanding for the *sprinkler system*, *standpipe system* or *fire alarm system* or there is any other indication that such systems may not be in good working order.

(3) Clearance from combustible materials. Pursuant to FC308.3.3, *open flames* and *open-flame devices* shall be kept a safe distance from combustible materials, and shall be placed at locations that minimize the risk of accidental ignition thereof.

(4) Special effects. It shall be unlawful to store, *handle* or use any *fireworks* or *pyrotechnic material, article or device* without a *special effects permit* issued pursuant to FC Chapter 33 and the *rules*.

(d) Use of Candles For Decorative Lighting Purposes

(1) Types of candles

(A) It shall be unlawful to use candles containing magnesium or other oxidizing agents or other accelerators, including candles that re-ignite themselves.

(B) Nothing contained herein shall be construed to prohibit use of Number 0 birthday candles (which are 1/16" in diameter and 2½" in length) and Number 00 birthday candles (which are 1/8" in diameter and 3" in length) when used on a cake or other food item for a festive occasion. Use of such candles for such purpose shall not be subject to the requirements of R308-01(d)(2).

(2) Candleholders

(A) It shall be unlawful to use cardboard, paper or flammable plastic candleholders.

(B) Candleholders shall be weighty, have a low center of gravity or be otherwise designed and constructed to resist accidental tipping in accordance with FC308.3.2(4).

(3) Placement

(A) The flames of candles placed on tables shall be protected in accordance with FC308.3.2(5).

(B) No candle shall be placed more than 24 inches above the dining table, except as *approved* by the *Department*.

(e) Use of Combustible Liquids in Lamps and Similar Open-Flame Decorative Devices

(1) Type of fuel. *Combustible liquids* used as fuel in lamps and similar *open flame decorative devices* shall be odorless and smokeless and shall have a *flash point* of not less than 140°F.

(2) Storage of fuel. No more than ten (10) gallons of *combustible liquids* may be stored on the *premises* as a reserve fuel supply for lamps and similar *open flame*

decorative devices. Such reserve fuel supply shall be stored in compliance with Fire Code requirements, including FC Chapter 34.

(3) Types and filling of devices

(A) *Combustible liquids* shall be used only in *open-flame decorative devices* properly protected by noncombustible enclosures complying with the requirements of FC308.3.2. Fuel reservoirs for such lamps shall be constructed of metal unless the *open-flame decorative device* is designed to store no more than four (4) fluid ounces of fuel.

(B) The wick for the lamp shall completely fill the wick tube to prevent vapors from rising around the wick.

(C) Lamps and similar *open-flame decorative devices* shall be filled in well-lit areas, at a safe distance from any *open flame*. Lamps and similar *open-flame decorative devices* shall not be filled in the dining room.

(4) Placement of devices

(A) When used on dining tables that are combustible, lamps and similar *open-flame decorative devices* shall be placed on a noncombustible tray or mat.

(B) It shall be unlawful to use *combustible liquids* in hanging lamps and similar *open-flame decorative devices*.

(f) Use of Candles and Solid Alcohol For Food Warming

(1) Construction of serving tables. Serving tables used to hold food warmers shall have noncombustible tops, or shall be protected by a noncombustible mat that covers the entire table top. Such mat shall be placed on top of the tablecloth.

(2) Use of noncombustible mats. When food warmers are used on dining tables, noncombustible mats extending eight (8) inches from each side of the food warmer, or a metal tray designed to contain the candle or hold the contents of a full container of heating fuel, shall be placed under the food warmer.

(3) Handling of food warmers. Food warmers shall not be removed from a dining or serving table while the candle or heating fuel is lit.

(4) Wheeled or other portable serving tables

(A) Wheeled or other portable serving tables shall be designed to prevent the heating fuel from being dislodged while the server is in motion.

(B) No more than two (2) levels of food warmers may be used on a wheeled or other portable serving table.

(C) Wheeled or other portable serving tables shall not be allowed to obstruct aisles or other *means of egress*.

(g) Use of Charcoal Briquettes and Other Solid Fuels (Except Solid Alcohol) For Cooking and Food Warming

(1) Handling

(A) The charcoal briquettes or other solid fuel used for cooking or food warming purposes shall be stored in a metal cabinet. Such cabinet shall be situated in a cool, dry location.

(B) *Flammable* and *combustible liquids* shall not be used to ignite, or accelerate ignition of, the charcoal briquettes or other solid fuel. Such fuels shall be ignited in an oven in the kitchen.

(C) The charcoal briquettes or other solid fuel shall be placed in a hibachi, or other *approved* cooking or food warming device, in the kitchen, and moved directly to the dining table.

(D) The hibachi or other *approved* cooking or food warming device shall be removed directly to the kitchen immediately after use, and the briquettes or other solid fuel, and the ashes, shall be immersed in water. Provisions shall be made for removal of the briquettes and ashes from the hibachi or other *approved* cooking or food warming device to a pail or other container of water.

(E) When not in use, hibachis shall be stored on noncombustible shelves or in metal cabinets.

(2) Construction of hibachis

(A) Hibachis shall be constructed of metal of sufficient thickness and strength as to safely contain the heat of the *open flame*, and shall have a low center of gravity or otherwise be designed and constructed to resist accidental tipping in accordance with FC308.3.2(4).

(B) Hibachis shall be fully enclosed to contain embers and hot ashes. Ashpit doors must be securely closed during use.

(C) Hibachis shall not use forced air to intensify heat.

(3) Construction of dining tables. Dining tables used to hold hibachis or other *approved* cooking or food warming devices shall have noncombustible tops or shall be protected by a noncombustible mat extending eight (8) inches from each side of the cooking or food warming device.

(h) Pits and Open Grills. Pits and open grills at dining tables or food serving areas shall be designed, installed, operated and maintained in accordance with FC 904.11.

(i) Flaming Food and Beverages. Flaming food and beverages shall be prepared and served in accordance with FC308.6.

(j) Use of LPG for Food Warming and Browning

(1) Use. Portable *LPG containers* may be used for food warming and browning only as authorized by this section. Portable *LPG containers* shall be used by food preparation staff trained and knowledgeable in the safe storage, *handling* and use of portable *LPG containers* and the *LPG* device used.

(2) Devices. All devices fueled by portable *LPG containers* that are used for food warming and browning purposes, including culinary torches, shall be in accordance with FC3801.4 and R3809-01. Not more than one (1) portable *LPG container* may be connected to each *LPG* device.

(3) Container size. Portable *LPG containers* for food warming and browning purposes shall be limited to those with a capacity not exceeding 16.4 ounces.

(4) Storage

(A) No more than twelve (12) portable *LPG containers* shall be stored in the *Group A occupancy* or public gathering place.

(B) When not in use, portable *LPG containers* shall be stored above grade in a metal cabinet, in an area protected by a *sprinkler system*. Such cabinet shall be installed away from sources of heat.

(k) Use of LPG for Demonstrations and Temporary Exhibitions. Portable *LPG containers* may be used for demonstrations and temporary exhibitions in accordance with FC3803.2.1.5.

(1) Demonstrations. Except as otherwise provided in R308-01(j)(2):

(A) Use. Portable *LPG containers* may be used for demonstration purposes when electricity, *piped natural gas* or other power source cannot be used to supply power for a device or operation being demonstrated or required for the demonstration. Portable *LPG containers* shall be *handled* and used for demonstration purposes only by persons trained and knowledgeable in

the safe storage, *handling* and use of portable *LPG containers* and the *LPG* device used for the demonstration.

(B) Devices. All devices fueled by portable *LPG containers* that are used for demonstration purposes shall be in accordance with FC3801.4 and R3809-01. Not more than one (1) portable *LPG container* may be connected to each *LPG* device.

(C) Container size. *LPG* used for demonstration purposes shall be limited to portable *LPG containers* with a capacity not exceeding 16.4 ounces.

(D) Removal from premises. All portable *LPG containers* and *LPG* devices used for demonstration purposes shall be delivered to the *premises* on the day of the demonstration, and removed from the *premises* no later than the end of the day. Overnight storage is prohibited.

(2) Trade shows and other temporary exhibitions

(A) Use. Portable LPG *containers* may be used for demonstration purposes, equipment operation or other purpose, where a device cannot be operated or operation cannot be conducted with the use of electricity, *piped natural gas* or other power source. Portable *LPG containers* shall be *handled* and used for demonstration purposes only by persons trained and knowledgeable in the safe storage, *handling* and use of portable *LPG containers* and the *LPG* device used for the demonstration.

(B) Devices. All devices fueled by portable *LPG containers* that are used for demonstration purposes shall be in accordance with FC3801.4 and R3809-01. Not more than one (1) portable *LPG container* may be connected to each *LPG* device.

(C) Container size. Except as may be authorized by the *Department*, portable *LPG containers* with a capacity not exceeding 16.4 ounces may be used at trade shows and other exhibitions for demonstration, equipment operation and other necessary purposes.

(D) Storage and removal from premises

(*1*) No more than 24 portable *LPG containers* shall be stored in connection with a trade show or other temporary exhibition.

(*2*) When not in use, portable *LPG containers* shall be stored above grade, in a fire-rated storage room protected by a *sprinkler system*, or in a metal cabinet located in an area protected by a *sprinkler system*.

(*3*) All portable *LPG containers* and devices shall be removed from the exhibition *premises* promptly once there is no further need for their use, but in any event no later than the last day of the trade show or other temporary exhibition.

(l) Portable Fire Extinguisher Requirements

(1) In addition to complying with the requirements of FC906, Group A occupancies and other public gathering places in which *open flames* and *open-flame devices* are used shall comply with the following portable fire extinguisher requirements:

(A) A portable fire extinguisher with at least a 5-B rating, readily accessible for use, shall be provided at each captain's station and in the dining room at the entrance to the kitchen.

§ 309 Reserved

§310-01 Designated Smoking Rooms in Hospitals, Nursing Homes, Rehabilitation Facilities and Similar Medical Facilities Housing the Ill, Aged and Infirm

(a) Scope. This section sets forth standards, requirements and procedures for designation of smoking rooms in hospitals, nursing homes, rehabilitation facilities and similar medical facilities housing the ill, aged and infirm.

(b) Definitions. The following terms shall, for purposes of this section and used elsewhere in the rules, have the meaning shown herein:

Designated smoking room. A room designated for smoking meeting the requirements for a "separate smoking room," as that term is defined in *Administrative Code* §17-502(w).

(c) General Provisions

(1) Designation of smoking rooms. Pursuant to FC310.2.4.4, smoking is prohibited in hospitals, nursing homes, rehabilitation facilities and similar medical facilities housing the ill, aged and infirm, except as authorized by the *Department*. Smoking rooms in such facilities shall be designated in accordance with the provisions of this section.

(2) It shall be unlawful for any patient to smoke in hospitals, nursing homes, rehabilitation facilities and similar medical facilities housing the ill, aged and infirm, except in a *designated smoking room* which has been approved by the *Department*.

(d) Application Requirements

(1) *Applications* shall be made to the *Department* for each room to be designated as a smoking room.

(2) *Applications* shall be submitted to the *Bureau of Fire Prevention* at Fire Department Headquarters, and shall include the following information and documentation and such other information and documentation as the *Department* may prescribe:

(A) a floor plan indicating the location(s) of rooms to be designated as smoking rooms; and

(B) an affidavit from a *registered design professional* professing that the construction and ventilation of *designated smoking rooms* comply with the requirements of the *Building Code* and New York City Smoke Free Air Act (*Administrative Code* Title 17, Chapter 5) and rules promulgated thereunder (Chapter 10 of Title 24 of the Rules of the City of New York).

(3) *Application* fees shall be as set forth in FC A03(51).

(e) Operational Requirements

(1) *Designated smoking rooms* shall be provided with an adequate number of noncombustible ashtrays. An ashtray or other noncombustible receptacle shall be provided at each exit from the *designated smoking room*.

(2) Doors in *designated smoking rooms* shall remain closed while people are smoking except to the extent necessary to permit access or egress to and from such rooms.

(3) Windows in a *designated smoking room* shall remain closed if smoking is occurring or has recently occurred in the room if the smoke would migrate to an occupied area whether indoors or outdoors.

(4) No oxygen or other *oxidizing gas* shall be stored or administered in *designated smoking rooms*.

(f) Portable Fire Extinguisher Requirements. *Designated smoking rooms* shall be provided with a portable fire extinguisher with at least a 2-A rating for every 2,500 square feet of floor area or fraction thereof. The travel distance to such portable fire extinguisher shall not exceed 75 feet.

(g) Sign Requirements

(1) “NO SMOKING” signs complying with the requirements of R310-02 shall be posted at entrances, in lobbies and corridors, and other conspicuous locations throughout the *premises* where they may be observed by patients, employees and visitors.

(2) “SMOKING PERMITTED. IN ACCORDANCE WITH THE NEW YORK CITY SMOKE-FREE ACT, ONLY PATIENTS OF THIS FACILITY MAY SMOKE IN THIS ROOM” signs shall be posted conspicuously at the entrance to and in each *designated smoking room*.

(3) In buildings where oxygen or other *oxidizing gas* is stored or administered in portable containers, "OXYGEN OR OTHER OXIDIZING GAS IS PROHIBITED FROM BEING STORED OR ADMINISTERED IN THIS ROOM" signs shall be posted conspicuously at the entrance to and in each *designated smoking room*.

§ 310-02 Design of “No Smoking” Signs

(a) Scope. This section sets forth the approved design for required “No Smoking” signs.

(b) General Provisions

(1) Approved design. Where “No Smoking” signs are required by the Fire Code or *rules*, the content, lettering, size and color of such signs shall comply with the requirements of this section, unless otherwise approved by the *Department*.

(2) Reproduction. Permission is granted to the public to reproduce, for use or sale, the design of the “No Smoking” sign set forth in this section, provided that any such reproduction strictly complies with the design requirements set forth in this section.

(c) Design Requirements

(1) Pictorial description and layout:

NO SMOKING

IN THESE PREMISES

UNDER PENALTY OF FINE OR IMPRISONMENT,
OR
BOTH, BY ORDER OF THE FIRE COMMISSIONER

(2) Overall sign size: 10" x 14" (or 11" x 15")

(3) Symbol: International "No Smoking" symbol (3¾" x ¼" cigarette and smoke in black; 5/16" x 5/16" ash in red; 6½" diameter x ¾" circle with ¾" cross bar in red).

(4) Legend:

Legend	Letter Size - Capital	Color
NO SMOKING	2" Min.	Red
IN THESE PREMISES	1" or 3/4" Min.	Black
UNDER PENALTY OF FINE OR IMPRISONMENT, OR BOTH, BY ORDER OF THE COMMISSIONER	1/4"	Black

(5) Material: For indoor locations, heavy cardboard stock or other *approved* durable material. For outdoor locations, or indoor locations where the signs may be exposed to conditions that will accelerate deterioration, metal or other *approved* durable material that is water-resistant.

(d) Authorized Smoking Areas in Hospitals, Nursing Homes and Similar Facilities. Where smoking is authorized in hospitals, nursing homes, rehabilitation facilities and similar medical facilities housing the ill, aged and infirm pursuant to FC310 and R310-01, "No Smoking" signs conforming to the requirements of this section shall be posted throughout the building, except that the additional legend "EXCEPT IN DESIGNATED LOCATIONS" shall be added immediately following the legend "NO SMOKING IN THESE PREMISES." Such additional legend shall be in black capital letters with lettering at least ½" high.

§ 311-312 Reserved

§ 313-01 Sale of Kerosene Space Heaters

(a) Scope. This section sets forth requirements for the sale of kerosene space heaters.

(b) General Provisions. Kerosene heaters shall be sold in compliance with the requirements of this section.

(c) Sign and Labeling Requirements. A sign shall be conspicuously posted at any location at which kerosene space heaters are offered for retail sale, and a tag or label shall be affixed to the heater or its packaging in a manner that makes it clearly visible prior to sale. Such sign and such tag or label shall bear the following statement:

> "The New York City Fire Code prohibits the storage, handling and use of kerosene fueled heaters for space heating. Any person violating that provision may be punished by a fine of up to $10,000 and a term of imprisonment up to 6 months."

§ 314-01 Indoor Display of Motor Vehicles and Watercraft

(a) Scope. This section sets forth requirements for the indoor display of *motor vehicles* and watercraft.

(b) General Provisions

(1) Display requirements. Indoor displays of *motor vehicles* and watercraft shall be designed, installed, operated and maintained in compliance with the requirements of FC314 and this section.

(2) Department authorization. *Motor vehicles* and *watercraft* shall not be displayed indoors until *Department* approval has first been obtained.

(c) Application Requirements

(1) Submission. *Applications* for *Department* authorization shall be submitted to the *Bureau of Fire Prevention.*

(2) Content. *Applications* for *Department* authorization shall include the following information, and such other information and documentation as the *Department* may require:

(A) The name and address of the *owner* of the building or structure, including any *tent* or other *membrane structure*, or part thereof, in which the display is to be conducted;

(B) The name and address of the sponsor of the display, if different from the *owner* of the *premises*;

(C) The scheduled duration of the display;

(D) A plan of the building or structure, or part thereof, in which the *motor vehicles* or watercraft will be displayed, indicating the number, type and location of the *motor vehicles* or watercraft to be displayed, and the *means of egress* from the display area;

(E) A description of the building's *fire protection systems* and the areas of the building or structure protected thereby; and

(F) An affidavit executed by a principal or officer of the *owner* or sponsor attesting that the requirements of FC314 and this section will be complied with.

(d) General Display Requirements. In addition to the display requirements set forth in FC314, indoor display of *motor vehicles* and watercraft shall be subject to the following requirements:

(1) Egress. Aisles a minimum of three (3) feet shall be provided and, together with other *means of egress*, maintained free of obstructions.

(2) Engine operation. *Motor vehicles* and watercraft engines shall not be operated at any time when the display is open to the public. The keys to the *motor vehicle* or watercraft shall not be left in the *motor vehicle* or watercraft, but shall be secured in a readily accessible location on the *premises* and made available to any *Department* representative.

(3) Open flames. No *open flames* shall be allowed in the display area during the display.

(4) Repairs or other work. No repairs or other work shall be conducted on a *motor vehicle* or watercraft in the display area.

(e) Special Display Requirements in Group A Occupancies and Other Public Gathering Places. In addition to the general display requirements set forth in FC314 and R314-01(c), indoor display of *motor vehicles* and watercraft in Group A occupancies in other public gathering places shall be subject to the following requirements:

(1) Storage of fuel in fuel tanks. Not more than one (1) gallon of gasoline, diesel fuel or other *liquid motor fuel* shall be allowed in the fuel tank of each *motor vehicle* or watercraft. Alternative fuel *motor vehicles* or watercraft shall contain no more fuel than the energy equivalent of one (1) gallon of gasoline.

(2) Fuel tanks shall be provided with a locking cap and shall be kept locked throughout the display.

(3) *Motor vehicle* and watercraft engines shall be disabled from starting throughout the display by installing an ignition lock, disconnecting the battery or other *approved* means. Battery or other electrical connections that are disconnected shall be adequately taped to prevent arcing.

(4) *Fire guards* shall be present throughout the display.

(f) Portable Fire Extinguisher Requirements. Portable fire extinguishers shall be provided and kept readily accessible as set forth in FC906.

§ 315-01 Storage of Flammable Plastic Foam Products

(a) Scope. This section sets forth requirements for the storage of *flammable plastic foam products*.

(b) Definition. The following term shall, for purposes of this section and as used elsewhere in the *rules*, shall have the meaning shown herein:

Flammable plastic foam products. Foam material that will ignite and continue to burn after contact for five (5) seconds with an open flame or glowing material.

(c) General Provisions

(1) Prohibited storage. It shall be unlawful to store in any building or structure *flammable plastic foam products* in a quantity requiring a *permit* where such building or structure is:

(A) of combustible construction.

(B) occupied as an *Occupancy Group R-2* or *R-3*.

(C) situated within 50 feet of the nearest wall of any building occupied as a school, hospital, or place of public assembly or public gathering.

(2) Permits. A *permit* shall be obtained for the storage of *flammable plastic foam products* as required by FC105.6.

(d) Design and Installation Requirements

(1) Sprinkler protection

(A) In any building in which more than 1,000 pounds, but not more than 6,000 pounds, of *flammable plastic foam products* are stored, every room or other area in which such products are stored shall be protected by a *sprinkler system*.

(B) In any building in which more than 6,000 pounds of *flammable plastic foam products* is stored, the entire building shall be protected throughout by a *sprinkler system*.

(e) Operational Requirements. Shredded *flammable plastic foam products* used in any manufacturing process or operation shall be stored in metal-lined containers having self-closing covers.

§ 316-324 Reserved

CHAPTER 4
EMERGENCY PLANNING AND PREPAREDNESS

§401-402 Reserved
§403-01 Fire Safety Precautions at Street Fairs and Similar Outdoor Public Gatherings
§403-02 Theater Inspections, Maintenance and Recordkeeping
§404-01 Fire Safety and Evacuation Plans
§404-02 Office Building Emergency Action Plans
§404-03 Fire Safety Requirements for Sidewalk Cafes and Similar Public Gathering Places
§405-407 Reserved
§408-01 Residential Buildings With Non-Sequential or Non-Standard Floor Numbering

§408-02 Residential Fire Safety Guides and Notices

§ 401-402 Reserved

§ 403-01 Fire Safety Precautions at Street Fairs and Similar Outdoor Public Gatherings

(a) Scope. This section sets forth requirements and procedures for the storage, handling and use of portable fueled equipment and other fire safety precautions at street fairs, bazaars, carnivals, concerts, festivals and similar outdoor public gatherings.

(b) General Provisions

(1) Responsibility of sponsor, promoter and concessionaires

(A) The sponsor and any promoter of a street fair or similar outdoor public gathering shall ensure that such event is conducted in compliance with the fire safety requirements applicable to such event, as set forth in the Fire Code, the *rules* and this section.

(B) Each concessionaire at a street fair or similar outdoor public gathering shall ensure that its materials, operations and facilities are designed, installed, operated and maintained in compliance with the requirements of the Fire Code, the *rules*, and this section.

(2) Prohibited storage, handling and use of CNG and flammable liquids

(A) The storage, handling and use of *CNG* is prohibited at street fairs and similar outdoor public gatherings pursuant to FC3507.3(15).

(B) It shall be unlawful to store, handle or use *flammable liquids* at street fairs and similar outdoor public gatherings, except in *listed* generators or other device, equipment or system or operation approved by the *Department.* Incidental storage of *flammable liquids* is prohibited, and all fueling of generators and other approved devices, equipment and systems shall be conducted only at times other than when the event is open to the public.

(3) Site plan, permits and inspections

(A) Not later than five (5) business days prior to the date of any street fair or similar outdoor public gathering requiring a permit from the New York City Office of Citywide Events Coordination and Management, the sponsor and any promoter of such event shall file a site plan with the plan intake window of the *Bureau of Fire Prevention*, together with the

required plan review fee set forth in FC Appendix A, indicating the streets or other locations upon which the event will be held or surrounding the event; any areas, booths, tents or other facilities and locations to be occupied by concessionaires; the identity of such concessionaires and the nature of the activity they will conduct; and the location of any portable fueled equipment, portable generators and other devices, equipment, systems, materials and operations regulated by the Fire Code or the *rules*, and the storage, *handling* and use of *hazardous materials* in connection therewith.

(B) The *Department* will review such plan and notify the sponsor if there are unlawful or unsafe conditions that must be addressed prior to the event.

(C) The *Department* shall issue a single combined *permit* for each type of material and operation associated with the event.

(D) The *Department* may conduct a pre-event site inspection. The sponsor or the promoter shall be responsible for the inspection fee set forth in FC Appendix A.

(4) Supervision

(A) The sponsor and any promoter shall ensure that all devices, equipment, systems, materials and/or operations required by the Fire Code or the *rules* to be supervised by a *certificate of fitness* holder shall be so supervised during the event.

(B) *Certificate of fitness* holders shall, at a minimum, inspect each device, equipment or system and incidental storage area prior to commencement of use each day, to confirm that all such devices, equipment and systems are in good working order and that all necessary and appropriate fire safety precautions have been taken. A record of such surveillance shall be maintained either at a central location for all concessionaires, or at each concession area, booth or other location, and shall be made available for inspection by any *Department* representative.

(C) The handling and use of *LPG*, and incidental storage thereto, including *LPG* used to fuel portable cooking equipment, shall be under the personal supervision of a holder a *certificate of fitness* for such material, in accordance with FC3801.5.6.

(D) The handling and use of kerosene and other *combustible liquids*, and storage incidental thereto, shall be under the personal supervision of a holder of a *certificate of fitness* for such material, when the aggregate amount of such *combustible liquids* requires a *permit* pursuant to R403-01(c).

(c) Specific Hazardous Material Requirements. Hazardous materials shall be stored, *handled* and used at street fairs and similar outdoor events in compliance with the requirements of FC Chapters 3, 34 and 38, and the following requirements:

(1) General

(A) *Permit*s for the *handling* and use, and incidental storage, of hazardous materials at street fairs and similar outdoor public gatherings shall be obtained based on the aggregate amount of the material, including the amounts of such material stored, *handled* or used by all concessionaires.

(B) Concessionaire areas shall be designed and arranged, through the use of booths, portable barricades or fences, or other *approved* means, to separate *portable fueled equipment* from the public. The public shall not be allowed inside such booths or enclosures.

(2) Liquefied petroleum gases (LPG). *LPG handling* and use, and storage incidental thereto, shall comply with the requirements of R3809-01.

(3) Kerosene and other combustible liquids

(A) The sponsor or any promoter of the event shall obtain a *permit* for the *handling* and use of kerosene and other *combustible liquids*, and storage incidental thereto, when the aggregate amount exceeds ten (10) gallons.

(B) The amount of kerosene and other *combustible liquids* that may be stored by each concessionaire incidental to *handling* and use shall not exceed ten (10) gallons, and such incidental storage shall be in *approved safety cans*.

(C) Kerosene and other *combustible liquids* shall only be used in *listed* devices, equipment and systems.

(d) Other Fire Safety Precautions

(1) Membrane structures. All *tents*, *air-inflated structures* and other membrane structures shall be installed, operated and maintained in compliance with the requirements of FC Chapter 24.

(2) Portable fire extinguisher requirements. Each concessionaire's area, booth, tent or other *facility* or location in which a *hazardous material* is being stored, *handled* or used, an operation is being conducted or other *facility* is being maintained, shall be provided with at least one (1) portable fire extinguisher having a minimum 10-B:C rating.

(3) Combustible waste containers. Each concessionaire's area, booth, tent or other *facility* or location shall be equipped with at least one (1) covered container for storage of *combustible waste*. Rubbish and other *combustible waste* shall be stored in such containers, which shall not be allowed to overflow.

(4) Fire apparatus access. Fire apparatus access shall be provided, by maintaining an unobstructed fire lane of not less than 15 feet in width.

(5) Fire hydrants and fire alarm boxes. The visibility of, and immediate access to, fire hydrants and fire alarm boxes shall be maintained at all times. Fire hydrants and fire alarm boxes shall be maintained free of signs or other articles or obstructions. The sponsor or promoter of the event shall conspicuously mark a solid yellow circle 12 inches in diameter in the center of the emergency access lane to indicate the location of each fire hydrant within the boundaries of the event.

(6) Fire escape ladders. Fire escape ladders shall not be obstructed in any manner that would impede their operation.

(7) Vacant buildings. Vacant buildings and temporarily unoccupied buildings in the immediate vicinity of the event shall be secured as set forth in FC311.

§ 403-02 Theater Inspections, Maintenance and Recordkeeping

(a) Scope. This section sets forth maintenance requirements for performing arts and motion picture theaters, including fire safety inspection and recordkeeping requirements. The requirements of this section shall be in addition to any applicable periodic inspection, testing or other maintenance requirements of the Fire Code or the *rules*.

(b) General Provisions

(1) Regular inspections required. Every performing arts and motion picture theater, including concert halls and television and radio studios admitting an audience, shall be periodically inspected for fire safety in compliance with the requirements of this section.

(2) Audience announcements

(A) Location of exits. When required by FC403.4, announcements informing the audience of the location of *exits* shall be made in compliance with the requirements of that section.

(B) Emergencies. A member of the *FSP staff* of a performing arts theater shall be designated to make announcements during the performance or other

event in case of a fire or other emergency, to inform the audience of the nature of the emergency and prevent panic.

(3) Fire emergency reporting signage. Signage shall be provided in compliance with the requirements of FC408.14.

(c) Fire Safety Inspection Requirements

(1) Daily inspections. A fire safety inspection shall be conducted in a performing arts or motion picture theater on any day on which the theater is to be used and occupied for a performance or other audience event. Such inspections shall verify compliance with the following requirements:

(A) *Means of egress*, including *exit access*, *exits* and *exit discharges*, shall be inspected daily to ensure that they are unobstructed, that there are no impediments to their immediate use and that door hardware and other devices and components are in good working order.

(B) Automatic fire doors shall be inspected to ensure that there are no obstructions to their closing, or otherwise rendered inoperable.

(C) *Standpipe* and *sprinkler systems*, including fire pumps and water storage tanks, shall be inspected to ensure they are in good working order.

(D) Portable fire extinguishers shall be inspected to ensure that they are readily available for use as required by FC906.

(E) If *special effects* are to be used during the performance, all of the conditions of the *permit*, including, where applicable, a fire watch and/or additional portable fire extinguishers, are in place.

(F) *Manual fire alarm boxes* located on the stage of performing arts theaters shall be tested by activating the alarm. Prior notification shall be made to the *central station* monitoring the *fire alarm system*.

(G) The means by which skylights and other stage smoke vents may be manually activated are fully operational and/or readily available.

(H) All areas of the theater, including the backstage, under the stage, and outdoor areas near the fresh air intakes for the building's ventilation system, shall be inspected to ensure that there is no accumulation of *rubbish* or other *combustible waste* that, if ignited, could cause a fire or smoke condition.

(2) Performance inspections. Fire safety inspections shall be conducted during each performance or other audience event. Such inspection shall verify compliance with the following requirements:

(A) The prohibition against smoking in the theater.

(B) Aisles and passageways are unobstructed and standee areas are maintained in accordance with FC403.3.

(C) All proscenium wall doors in a performing art theater are kept closed.

(D) At the conclusion of the performance or audience event in a performing arts theater, the flame-resistant stage curtain and stage trap doors are closed, and stage elevators are returned to the stage floor level.

(3) Regular inspections. Theaters shall be operated and maintained in accordance with Fire Code requirements, including conducting the periodic inspection and testing of *fire protection systems* required by FC901.6 and FC311.2.2. *Out-of-service fire alarm, sprinkler* or *standpipe systems* shall be reported immediately to the *Department*.

(d) Recordkeeping Requirements

(1) Logbook required. Every performing arts and motion picture theater shall provide and maintain at an *approved* location a logbook in compliance with the requirements of this section, for the purposes of documenting compliance with the fire safety inspections required by this section and the *FSP staff* training required by FC406.

(2) Format. The logbook shall be a bound journal with consecutively numbered pages, unless the *Department* has authorized or approved an alternative form of electronic recordkeeping. The front cover shall be marked: "Theater Inspection Logbook" and the name of the theater. A copy of this section shall be affixed to the inside front cover of the logbook.

(3) Entries. Entries shall be made in the logbook as follows:

(A) Inspections. An entry including the following information shall be made to document each inspection conducted in compliance with the requirements of R403-01(c) or other provision of the Fire Code or *rules*:

(*1*) the name and signature of person who conducted the inspection;

(*2*) the date and time of the inspection;

(*3*) the results of inspection, including any deficiencies found and any corrective action taken; and

(*4*) the name of person designated to make emergency announcements pursuant to R403-01(b)(2)(B).

(B) Fire safety plan and FSP staff training. Entries relating to the *fire safety and evacuation plan* and *FSP staff* training shall be made in compliance with the requirements of R404-01(s).

(4) Retention. Pursuant to FC107.7, the logbook shall be kept at the *premises* for a period of at least three (3) years, and shall be made available for inspection by any *Department* representative.

§404-01 Fire Safety and Evacuation Plans

(a) Scope. This section sets forth standards, requirements and procedures for the preparation, content, submission, acceptance and amendment of *fire safety and evacuation plans*; designation, qualifications and training of *FSP staff*, and their duties and responsibilities; education of *building occupants*, including the conduct of drills; recordkeeping; obligations of *building occupants* and employers of *building occupants*; and provision of assistance to *building occupants* with special needs.

(b) Definitions. The following terms shall, for purposes of this section and R404-02, have the meanings shown herein:

Assembly area. A designated outdoor area to which *building occupants* are directed to report upon implementation of a *partial evacuation* or *evacuation* in accordance with a *fire safety and evacuation plan* or an *emergency action plan*.

Building occupants. All persons in the building, including employees, building personnel and visitors.

Deputy fire safety/EAP director. One (1) or more employees designated by the *owner* as qualified and trained to perform the duties of such position in accordance with the requirements of this section and R404-02, and who possesses the requisite qualifications and training, as set forth in R113-03.

Evacuation. The emptying of a building of all *building occupants* in response to a *fire* or an *emergency*.

Fire safety/EAP director. The employee designated by the *owner* to perform duties of such position in accordance with the requirements of this section and R404-02, and who possesses the requisite qualifications and training, as set forth in R113-03.

In-building relocation. The controlled movement of *building occupants* from an endangered area of a building to an *in-building relocation area* within the same building in response to a *fire* or an *emergency*.

In-building relocation area. A designated indoor area to which *building occupants* may be relocated in accordance with a *fire safety and evacuation plan* or an *emergency action plan*.

Owner. The fee owner or lessee of the building, or other person or entity having charge thereof.

Partial evacuation. The emptying of a building of some but not all *building occupants* in response to a *fire* or an *emergency*.

Shelter in place. The precaution of directing *building occupants* to remain inside the building, at their present location, in response to a *fire* or an *emergency*.

(c) General Requirements

(1) Applicability. This section applies to the buildings and occupancies set forth in FC404.2.1.

(2) Owner obligations

(A) Preparation of fire safety and evacuation plan. An *owner* shall cause a *fire safety and evacuation plan* to be prepared for each occupancy or building, submitted for *Department* review and acceptance (when required by the Fire Code and rules), and periodically reviewed and amended, in compliance with the requirements of this section. The *fire safety and evacuation plan* shall be in the form set forth in Appendices A, B, C and D to this section, as applicable.

(*1*) Floor plans. Each *fire safety and evacuation plan* shall include floor plans for the building or occupancy. The floor plans shall be submitted to the *Department* and maintained at the *premises* in accordance with R404-01(c)(2)(D) and (d)(7).

(*2*) Building information card. When required by this section, a building information card, in the format set forth in R404-01 Appendix B, shall be maintained at the *fire command center*, to serve as a ready reference for firefighting and other emergency response personnel. The building information card shall be 11” x 17” in size, double-sided and laminated, and contain a color-coded plot plan and elevation of the building, and detailed building information.

(*3*) Floor postings. When required by this section, signs identifying *FSP staff* shall be conspicuously posted on each floor, and maintained at an *approved* location on the *premises*, where they shall be made available for inspection by *Department* representatives. Such signs shall conform to the format set forth in R404-01 Appendix C.

(*4*) Building profile. When required by this section, a building profile, in the format set forth in R404-01 Appendix D, shall be prepared and submitted to the *Department* to serve as a ready reference for *Department* oversight of emergency preparedness and for use in connection with *Department* fire safety inspections.

(B) Designation of FSP staff. Pursuant to FC401.6, an *owner* shall designate in the *fire safety and evacuation plan FSP staff* responsible for the implementation of such plan, with the authority, duties and responsibilities set forth therein.

(C) Cooperation of building occupants. When the *owner* becomes aware that a *building occupant* is neglecting or failing to cooperate with his or her duties, responsibilities or obligations to comply with the provisions of this section or the *fire safety and evacuation plan*, the *owner* shall notify the employer of such individual. If the employer fails to timely correct the condition the *owner* shall notify the *Department*.

(D) Plan submission, acceptance and/or maintenance on premises. When required by FC404.6 or this section, an *owner* shall cause a *fire safety and evacuation plan* to be submitted to, and acceptance obtained from, the *Department*, in compliance with the requirements of FC404.6. A paper copy of the *fire safety and evacuation plan* for the *premises*, including floor plans, shall be maintained on the *premises*, at an *approved* location, and shall be made available for inspection by any *Department* representative. Where a building is provided with a *fire command center*, the *fire safety and evacuation plan* shall be maintained at that location.

(E) Fire drills. An *owner* shall cause *fire drills* to be conducted in accordance with FC405, if required by FC405.2. *FSP drills* shall be in the form of live instruction except as otherwise authorized by this section.

(F) FSP staff training. An *owner* shall cause *FSP staff* to be trained in accordance with FC406 and this section. *FSP staff* training shall be in the form of live instruction except as otherwise authorized by this section.

(G) Recordkeeping. An *owner* shall cause records to be maintained in accordance with FC405.5 and FC406.2.

(H) Fire emergency reporting signage. Signage shall be provided in the lobby or entrance hall of each building in compliance with the requirements of FC408.14.

(3) Obligations of building occupants and their employers. All *building occupants* and employers of *building occupants* shall comply with the directions of the *FSP staff* upon implementation of the *fire safety and evacuation* plan, and otherwise fulfill their obligations in accordance with FC405.2 and R404-01(t).

(4) Authority to implement the fire safety and evacuation plan

(A) The *fire safety and evacuation plan* shall be immediately implemented and *building occupants* directed to *shelter in place*, relocate within the building, partially evacuate or evacuate, whenever such action is deemed necessary to ensure the safety of *building occupants*.

(B) The ability of the fire safety director or other *FSP staff* designated to implement the *fire safety and evacuation plan* shall not be subordinated to the authority of any other person or impaired by any notification procedure established by the *owner*. The fire safety director, or other *FSP staff* designated to perform such duty, shall determine the safest and most efficient course of action consistent with the *fire safety and evacuation plan*, depending on the nature of the fire or fire related emergency.

(C) The authority of the fire safety director to implement the *fire safety and evacuation plan*, as set forth in FC Chapter 4, this section and in the plan itself, shall be assumed by a deputy fire safety director in the absence of the fire safety director, or, if no fire safety director or deputy fire safety director is required to be on duty, by a fire safety building evacuation supervisor. In buildings and occupancies not requiring a fire safety director, the *owner* shall designate one (1) or more *FSP staff* members responsible for initiating implementation of the *fire safety and evacuation plan* and one (1) or more alternate *FSP staff* members to perform such function in the absence of the primary designees.

(5) Compliance with orders of lawful authorities. The *owner*, fire safety director and all other *FSP staff* and *building occupants* shall comply with the orders of the *Department* or other incident commander or emergency response personnel should such incident commander or emergency response personnel be present at the building.

(6) Official notifications of fires and implementation of fire safety and evacuation plan.

(A) In accordance with FC401.3, any fire shall be immediately reported to 911.

(B) The fire safety director, or other *FSP staff* designated to perform such duty, shall immediately report to 911 a determination to implement the *fire safety and evacuation plan*.

(C) The fire safety director, or other *FSP staff* designated to perform such duty, shall immediately notify pre-determined representatives of other occupancies in a building of combustible construction.

(7) Communications with building occupants

(A) The fire safety director, or other *FSP staff* designated to perform such duty, shall be responsible for communicating information and directions to *building occupants* whenever the *fire safety and evacuation plan* is implemented, including during any *fire drill*.

(B) Implementation of the *fire safety and evacuation plan* or the conduct of a *FSP drill* shall be communicated to the appropriate *building occupants* by the sounding of an alarm or alert tone followed by an announcement. The announcement shall include the following information:

(*1*) whether the announcement is being made in connection with a fire condition or a *FSP drill*, and, if in connection with a fire condition:

(*a*) where the fire condition exists; and

(*b*) which floors or other parts of the building are affected and what action is to be taken in response to the fire condition.

The announcement shall be repeated or updated on a frequent basis, to inform and reassure *building occupants*.

(d) Content of Fire Safety and Evacuation Plans. Each *fire safety and evacuation plan* prepared pursuant to this section shall include all of the information set forth in FC404.3.1 and the following information:

(1) Types of Responses to Fire Condition

(A) The *fire safety and evacuation plan* shall set forth the circumstances and procedures for the *sheltering in place*, *in-building relocation*, *partial evacuation* and/or *evacuation* of *building occupants* in response to a fire condition.

(B) The *fire safety and evacuation plan* shall address how such measures will be implemented during *regular business hours*, and at times other than *regular business hours*, when *FSP staff* may be absent from the building.

(2) Designation of FSP Staff. The *fire safety and evacuation plan* shall designate *FSP staff*, as set forth in FC401.6 and this section.

(3) Designation of fire command center. Where a building is provided with a *fire command center*, the *fire safety and evacuation plan* shall designate such *fire command center* as the location from which the fire safety director or other *FSP staff* shall coordinate implementation of the *fire safety and evacuation plan* or conduct a *FSP drill*.

(4) Use of elevators. The *fire safety and evacuation plan* shall prohibit the use of elevators to implement the *fire safety and evacuation plan*, except in buildings where a fire safety director or deputy fire safety director is on duty, and under the following circumstances:

(A) Where such use is conducted or authorized by firefighting personnel.

(B) Where such use is made necessary by fire, heat or smoke conditions in stairwells, preventing or hindering the *evacuation*, *partial evacuation* or *in-building relocation* of *building occupants*, and the fire safety director determines that the elevators can be safely used, subject to the following provisions:

(*1*) Elevators which operate in a shaft that does not serve (stop at) the fire floor or have openings on the fire floor may be used. Elevators serving (stopping at) the fire floor or having openings on the fire floor shall not be used under any circumstances.

(*2*) Only elevators provided with two-way voice communication to the *fire command center* in accordance with *Building Code* requirements may be used for these purposes.

(*3*) Movement of elevators shall be controlled either by operation in manual mode by an *FSP staff* member or at the elevator control panel in the lobby, under the direct supervision of the fire safety director.

(5) Maintenance program. The *fire safety and evacuation plan* shall indicate the *certificate of fitness* holder or other building personnel (by job title) responsible for inspecting, testing and otherwise overseeing the maintenance of the building's *fire protection systems* and the other equipment and operations affecting building fire safety, as set forth in the appendices to this section.

(6) Assistance to building occupants with special needs

(A) The *fire safety and evacuation plan* shall establish procedures for identifying in advance *building occupants* who require assistance to participate in the *fire safety and evacuation plan* because of an infirmity, disability or other special need, and procedures for providing such assistance. Assistance that may be required may include implementing procedures or modifying equipment to ensure receipt of announcements, designating areas for assistance, and designating persons to provide assistance.

(B) The *owner* shall make the procedure for requesting such assistance known to all *building occupants* and employers of *building occupants*.

(C) A list of the *building occupants* who have requested such assistance, and their regular work location (or other location where they may be found), shall be maintained at the *fire command center* or other location required by R404-01(c)(2)(D), and made available to *Department* representatives or emergency response personnel, upon request.

(D) The *FSP staff* shall periodically review the list of such *building occupants* on the floors or other areas of the building in which they perform their duties, so as to familiarize themselves with the *building occupants* requiring assistance to participate in the *fire safety and evacuation plan*.

(7) Floor plans

(A) Format and content. The *fire safety and evacuation plan* shall include, for each floor of the building (including any floors below grade), a current floor plan bearing the signature and seal of a *registered design professional*, containing the information required by FC404.3.1(4), marked to reflect exit routes, *in-building relocation areas*, and other information contained in the *fire safety and evacuation plan* amenable to graphic representation.

(B) Incorporation of emergency action plan information. For *office buildings*, the floor plans required by this section shall incorporate the additional items of information required by R404-02(d)(7) for *office building emergency action plan*s.

(C) Sprinkler and standpipe system riser diagram. The information required by FC404.3.1(4.12) with respect to the *sprinkler system*, *standpipe system* and fire department connections shall be set forth on a separate riser diagram, which shall include the following information and depict its location:

(*1*) Water supply

(*a*) City water main supply, including diameter of service pipe.

(*b*) Fire department connections.

(*c*) Gravity tanks and pressure tanks, indicating the total capacity and quantities available for fire reserve.

(*d)* Fire pumps, including *gpm* capacity and whether automatic or manual

(*e)* Booster pumps (special service pumps), including *gpm* capacity

(*2*) Piping and piping components

(*a*) Risers, including diameters

(*b*) Riser cross connections

(*c*) Check valves and control valves

(*d*) Dry pipe and pre-action valves

(*e*) Riser section valves

(*f*) *Sprinkler system* floor control valves

(*g*) Pressure-reducing valves

(*h*) Fire hose racks.

(*i*) Roof manifolds

(e) Specific Requirements – Assembly Occupancies

Reserved

(f) Specific Requirements – Atriums, Covered Malls and Mercantile

Reserved

(g) Specific Requirements – Dormitories

Reserved

(h) Specific Requirements – Educational Facilities

Reserved

(i) Specific Requirements – Emergency Shelters

(1) Fire Safety and Evacuation Plan.

Reserved

(2) FSP Staff

(A) Fire safety coordinator

(*1*) Qualifications. The fire safety coordinator shall satisfactorily complete an *approved* course for fire safety coordinator, hold a fire safety coordinator *certificate of fitness* and possess the qualifications set forth in FC113 and R113-01.

(*2*) Duties and responsibilities. The fire safety coordinator shall perform the duties and have the responsibilities set forth in FC401.6.8.2.

(B) Deputy fire safety coordinator

(*1*) Qualifications. The deputy fire safety coordinator shall satisfactorily complete an *approved* course for fire safety coordinator, hold a fire safety coordinator *certificate of fitness* and possess the qualifications set forth in FC113 and R113-01.

(*2*) Duties and responsibilities. The deputy fire safety coordinator shall perform the duties and have the responsibilities set forth in FC401.6.8.2.

(j) Specific Requirements – High-Hazard Occupancies

Reserved

(k) Specific Requirements – Hotel/Motel Occupancies. Hotel/Motel occupancies shall additionally comply with the following requirements:

(1) Fire safety and evacuation plan. Except as otherwise provided in R404-01(g) and (m), a *fire safety and evacuation plan*, that conforms to the format for such plans annexed to this section as Appendix A-1 shall be prepared for each hotel, motel or other Group R-1 occupancy. Such format shall be used on or after January 1, 2011 when submitting for *Department* acceptance any amendment to an existing

fire safety and evacuation plan, other than *FSP staff* changes. The *fire safety and evacuation plan* shall include the following appendices:

(A) a building information card conforming to the format annexed to this section as Appendix B-1, which shall be maintained at the *fire command center* and made available to any *Department* representative or emergency response personnel upon request and

(B) a building profile conforming to the format annexed to this section as Appendix D.

(2) FSP Staff

(A) FSP Staff required. The *owner* of a hotel or motel (*Occupancy Group R-1*) building or occupancy shall designate a fire safety director, deputy fire safety directors and a fire brigade. Such staff shall perform the duties and responsibilities set forth in this section.

(B) Fire safety director

(*1*) Qualifications. The fire safety director shall hold a fire safety director *certificate of fitness* and possess the qualifications set forth in FC113 and R113-03.

(*2*) Duties and responsibilities. The fire safety director shall:

(*a*) have the duties and responsibilities as set forth in FC401.6.5;

(*b*) supervise and train the deputy fire safety directors, and other *FSP staff* pursuant to FC406.2, including conducting initial and periodic refresher training to maintain the state of readiness of such staff;

(*c*) select qualified building personnel for the fire safety brigade, organize, train and supervise the fire safety brigade, and be responsible for the state of readiness of the fire safety brigade;

(*d*) immediately report to 911 any fire and any determination to implement the *fire safety and evacuation plan*;

(*e*) in the event of a fire in or affecting the building, report to the *fire command center* or designated alternative location, and, if appropriate, implement the *fire safety and evacuation plan* in accordance with its terms and the

provisions of this section, and notify arriving emergency response personnel and incident commander of the situation and the building response thereto;

(*f*) in the event of a fire in or affecting the building, be responsible for communicating all information and directions to *building occupants* necessary to implement the *fire safety and evacuation plan*; and

(*g*) notify the *owner* of any *building occupant* that neglects or fails to cooperate with *fire safety and evacuation plan* duties, responsibilities or obligations required by this section.

(C) Deputy fire safety director

(*1*) Qualifications. The deputy fire safety director shall hold a fire safety director *certificate of fitness* and possess the qualifications set forth in FC113 and R113-03.

(*2*) Duties and responsibilities. The deputy fire safety director shall:

(*a*) in the absence of the fire safety director, perform the duties of the fire safety director, as circumstances warrant, except that the fire safety director shall personally supervise all *FSP staff* training; and

(*b*) in the presence of the fire safety director, assist the fire safety director in carrying out the requirements of the *fire safety and evacuation plan* and this section, as circumstances warrant.

(D) Fire safety brigade

(*1*) Qualifications. All fire safety brigade members shall receive training in the *fire safety and evacuation plan* from the fire safety director in accordance with FC406.2.

(*2*) Duties and responsibilities. Members of the fire safety brigade shall:

(*a*) perform their designated assignments, as set forth in the *fire safety and evacuation plan* or as directed by the fire safety director; and

(*b*) in the event of a fire, immediately report to the designated locations, as set forth in the *fire safety and evacuation plan* or directed by the fire safety director, to be ready to undertake their designated assignments.

(3) FSP staff training. The *FSP staff* training required by FC406 shall be in the form of live instruction, but may be supplemented by video presentations and/or distribution of other educational materials. Training may be conducted in the form of computerized training, without live instruction, provided that such computerized training is interactive, includes an evaluation of the *FSP staff* members' understanding of the training materials, and is not conducted in lieu of live instruction for more than one-half (½) of the required *FSP staff* training sessions per year.

(l) Specific Requirements – Hospitals and Other Health Care Facilities

Reserved

(m) Specific Requirements – Lodging Houses

Reserved

(n) Specific Requirements – Office Buildings. Office building occupancies, except those provided with an *approved central station*-monitored interior *fire alarm system* as set forth in R404-01(o), shall additionally comply with the following requirements:

(1) Fire safety and evacuation plan. A *fire safety and evacuation plan* shall be prepared for each *office building* that conforms to the format for such plans annexed to this section as Appendix A-2, which sets forth a combined format for *office building fire safety and evacuation plans* and *emergency action plans.* Such combined format shall also be used on or after January 1, 2011 when submitting for *Department* acceptance any amendment to an existing *fire safety and evacuation plan* or *emergency action plan*, other than *FSP staff* or *EAP staff* changes. The combined *fire safety and evacuation/emergency action plan* shall include the following appendices:

(A) a building information card conforming to the format annexed to this section as Appendix B-2 which shall be maintained at the *fire command center* and made available to any *Department* representative or emergency response personnel upon request; and

(B) a building profile conforming to the format annexed to this section as Appendix D.

(2) FSP staff

(A) FSP staff required. The *owner* of a *Occupancy Group B office building* shall designate the following *FSP staff*, which shall have the following duties and responsibilities:

(*1*) a *fire safety/EAP director* and a sufficient number of *deputy fire safety/EAP directors* to ensure that a *deputy fire safety/EAP director* is present to perform the duties of the *fire safety/EAP director* at all times that a *fire safety/EAP director* is required to be on duty, but is absent;

(*2*) at least one (1) person as a fire safety building evacuation supervisor, and qualified to serve in such position, shall be present and on duty in the building at all times when a *fire safety/EAP director* is not required to be on duty, but there are occupants in the building. The fire safety building evacuation supervisor at such times shall exercise the authority and responsibility of the *fire safety/EAP director* to implement the *fire safety and evacuation plan*;

(*3*) at least one (1) fire safety warden for each floor of the building. Fire safety wardens shall be on duty on each floor during *regular business hours* for such floor;

(*4*) at least one (1) deputy fire safety warden for each employer of *building occupants* on a floor. If the floor area occupied by an employer of *building occupants* on a single floor exceeds 7,500 square feet, a deputy fire safety warden shall be designated for each 7,500 square feet or portion thereof. At least the minimum required number of deputy fire safety wardens, with the training required for the position, shall be on duty on each floor during the *regular business hours* of such employer;

(*5*) at least one (1) male and one (1) female fire safety searcher for each employer of *building occupants* on a floor. Such fire safety searchers shall be on duty on each floor during the *regular business hours* of such employer; and

(*6*) the members of a fire safety brigade. The fire safety brigade shall consist of building personnel, office employees or other *building occupants* designated to assist in the implementation of the *fire safety and evacuation plan*, including persons assigned to assist *building occupants* that require assistance to participate in the plan. Fire safety brigade members shall be on duty during *regular business hours*. The *fire safety/EAP director* and *deputy fire safety/EAP directors* shall not be designated as fire safety brigade members.

(B) Fire safety director

(*1*) Qualifications. The *fire safety/EAP director* shall hold a *fire safety/EAP director certificate of fitness and* possess the qualifications set forth in R113-03.

(*2*) Duties and responsibilities. The *fire safety/EAP director* shall:

(*a*) be present and on duty in the building during *regular business hours*;

(*b*) be fully familiar with the provisions of the *fire safety and evacuation plan*;

(*c*) supervise and train the *deputy fire safety/EAP directors*, fire safety building evacuation supervisors, fire safety wardens, deputy fire safety wardens, fire safety searchers, fire safety brigade members and other *FSP staff* pursuant to FC406.2 and this section, including conducting initial and periodic refresher training to maintain the state of readiness of such staff;

(*d*) be responsible for a daily check of the availability of fire safety wardens and deputy fire safety wardens, and make such notifications or temporary assignments as are necessary to ensure adequate fire safety staffing;

(*e*) select qualified building personnel for the fire safety brigade, organize, train and supervise the fire safety brigade, and be responsible for the state of readiness of the fire safety brigade;

(*f*) immediately report to 911 any fire and any determination to implement the *fire safety and evacuation plan*;

(*g*) in the event of a fire in or affecting the building, report to the *fire command center* or designated alternative location, and, if appropriate, implement the *fire safety and evacuation plan* in accordance with its terms and the provisions of this section, and notify arriving emergency response personnel and incident commander of the situation and the building response thereto;

(*h*) in the event of a fire in or affecting the building, be responsible for communicating all information and

directions to *building occupants* to implement the *fire safety and evacuation plan*;

(*i*) conduct the *fire drills*;

(*j*) ensure that the required notices are posted on the floors and that the required recordkeeping is maintained;

(*k*) with respect to the implementation of *fire safety and evacuation plans* and the conduct of *fire drills*, comply with the requirements of FC Chapter 4 and the *rules*; and

(l) notify the *owner* of any *building occupant* that neglects or fails to cooperate with *fire safety and evacuation plan* duties, responsibilities or obligations required by this section.

(C) Deputy fire safety/EAP director

(*1*) Qualifications. The *deputy fire safety/EAP director* shall hold a *fire safety/EAP director certificate of fitness and* possess the qualifications set forth in R113-03. The *deputy fire safety/EAP director* shall receive training in the *fire safety and evacuation plan* from the *fire safety/EAP director*.

(*2*) Duties and responsibilities. The *deputy fire safety/EAP director* shall:

(*a*) in the absence of the *fire safety/EAP director*, perform the duties of the *fire safety/EAP director*, as circumstances warrant, except that the *fire safety/EAP director* shall personally supervise all *FSP staff* training; and

(*b*) in the presence of the *fire safety/EAP director*, assist the *fire safety/EAP director* in carrying out the requirements of the *fire safety and evacuation plan* and this section, as circumstances warrant.

(D) Fire safety building evacuation supervisor

(*1*) Qualifications. The fire safety building evacuation supervisor shall receive training in the *fire safety and evacuation plan* from the *fire safety/EAP director* as set forth in FC Table 406.2(2).

(*2*) Duties and responsibilities. The fire safety building evacuation supervisor shall:

(*a*) in the absence of the *fire safety/EAP director* and *deputy fire safety/EAP director*, perform the duties of the *fire safety/EAP director*, as circumstances warrant; and

(*b*) in the presence of the *fire safety/EAP director*, assist the *fire safety/EAP director* in carrying out the requirements of the *fire safety and evacuation plan* and this section, as circumstances warrant.

(E) Fire safety wardens

(1) Qualifications. The fire safety warden shall receive training in the *fire safety and evacuation plan* from the *fire safety/EAP director* in accordance with FC406.2.

(2) Duties and responsibilities. The fire safety warden shall:

(*a*) be familiar with the *fire safety and evacuation plan*, including general *sheltering in place*, *in-building relocation*, *partial evacuation* and *evacuation* procedures, the exit and *in-building relocation* routes to be utilized for the floor, the location of *in-building relocation areas*; and the means of communicating with the *fire safety/EAP director*;

(*b*) in the event of a fire on the floor or immediately affecting *building occupants* on the floor, notify the *fire safety/EAP director* and *building occupants* on the floor of the fire and initiate appropriate action;

(*c*) in the event of a fire not on the floor or not immediately affecting *building occupants* on the floor, establish communication with the *fire safety/EAP director* and, if possible, await direction from the *fire safety/EAP director*;

(*d*) keep the *fire safety/EAP director* informed of his or her location and the progress of the implementation of *fire safety and evacuation plan* measures;

(*e*) confirm the *in-building relocation* or *evacuation* of the floor or portion thereof by directing deputy fire safety wardens and/or other *FSP staff* designated as fire safety searchers to search all areas of the floor to be relocated in building or evacuated; to do so by visual inspection, not merely by the lack of a voice response; and to notify any

remaining *building occupants* that they must immediately comply with the applicable *fire safety and evacuation plan* procedures;

(*f*) determine whether the stairwells are safe to enter before directing *building occupants* to use them, and, if unsafe, notify the *fire safety/EAP director*;

(g) instruct *building occupants* not to use elevators; and

(*h*) perform such other duties as set forth in the *fire safety and evacuation plan*, or as directed to do so by the *fire safety/EAP director*.

(F) Deputy fire safety wardens

(*1*) Qualifications. The deputy fire safety warden shall receive training in the *fire safety and evacuation plan* from the fire safety director in accordance with FC406.2.

(*2*) Duties and responsibilities. The deputy fire safety wardens shall:

(*a*) in the absence of the fire safety warden, perform the duties of the fire safety warden, as circumstances warrant; and

(*b*) when the fire safety warden is present, assist the fire safety warden in carrying out the requirements of the *fire safety and evacuation plan* and this section, by searching all areas of the floor to be relocated in building or evacuated, and notifying any remaining *building occupants* that they must immediately comply with the applicable *fire safety and evacuation plan* procedures, and by performing such other duties as assigned by the *fire safety and evacuation plan* or directed by the fire safety warden.

(G) Fire safety brigade members

(*1*) Qualifications. All fire safety brigade members shall receive training in the *fire safety and evacuation plan* from the *fire safety/EAP director* in accordance with FC406.2.

(*2*) Duties and responsibilities. Members of the fire safety brigade shall:

(*a*) perform their designated assignments, as set forth in the *fire safety and evacuation plan* or as directed by the *fire safety/EAP director*;

(*b*) in the event of a fire, immediately report to the floor below the fire floor to assist in the *evacuation* and to provide information about the fire back to the *fire command center*;

(*c*) prior to arrival of firefighting personnel, attempt to control the size and limit the spread of the fire, by use of portable fire extinguishers or by closing fire doors or other doors, provided that the size and location of the fire do not pose an immediate danger to the brigade members taking such actions; and

(*d*) upon arrival of firefighting personnel, all brigade members, except the brigade member assigned to report to the floor below the fire floor, shall report to the *fire command center* for further instructions.

(H) Fire safety searchers

(*1*) Qualifications. All fire safety searchers shall receive training in the *fire safety and evacuation plan* from the *fire safety/EAP director*. Such training shall be for the same duration and frequency as required for fire brigade members pursuant to FC406.2.

(*2*) Duties and responsibilities. Fire safety searchers shall:

(*a*) in the absence of the deputy fire safety warden, perform the duties of the deputy fire safety deputy warden; and

(*b*) in the presence of the fire safety warden, assist the fire safety warden in carrying out the requirements of the *fire safety and evacuation plan* and this section, by searching all areas of the floor to be relocated in building or evacuated, notifying any remaining *building occupants* that they must immediately comply with the applicable *fire safety and evacuation plan* procedures, and performing such other duties as assigned by the *fire safety and evacuation plan* or directed by the fire safety warden.

(I) Identification of FSP staff. Upon implementation of the *fire safety and evacuation plan* and during *FSP drills*, the *fire safety/EAP director* and all *FSP staff* shall identify themselves to *building occupants* and others by

donning a vest, armband or other form of identification indicating their role.

(3) FSP staff training. The *FSP staff* training required by FC406 shall be in the form of live instruction, but may be supplemented by video presentations and/or distribution of other educational materials. Training may be conducted in the form of computerized training, without live instruction, provided that such computerized training is interactive, includes an evaluation of the *FSP staff* members' understanding of the training materials, and is not conducted in lieu of live instruction for more than one-half (½) of the required *FSP staff* training sessions per year.

(4) FSP drills. The *FSP drills* required by FC406 shall be in the form of live instruction, but may be supplemented by video presentations and/or distribution of other educational materials. Such instructional drills may be conducted in the form of computerized training, without live instruction, provided that such computerized training is interactive, includes an evaluation of the participants' understanding of the training materials, and is not conducted in lieu of live instruction for more than one-half (½) of the required *FSP drills*.

(5) FSP staff floor postings. Notices identifying the *FSP Staff* shall be conspicuously posted on each floor, and kept at the *fire command center*, where they shall be made available for inspection by *Department* representatives. The format of such notices shall be as set forth in R404-01 Appendix C-2.

(o) Specific Requirements – Other Buildings and Occupancies. The following buildings and occupancies shall additionally comply with the following requirements:

(1) Office buildings with approved interior fire alarm systems. A fire safety and evacuation plan that conforms to the format for such plans annexed to this section as Appendix A-3 shall be prepared for each office building which has been permitted to have an approved central station-monitored interior fire alarm system in accordance with Department of Buildings Technical Policy and Procedure Notice #1/03 in lieu of installing a mini-Class E fire alarm system that would have otherwise been required pursuant to 1968 Building Code §27-972(h). The fire safety and evacuation plan shall include a building profile conforming to the format annexed to this section as Appendix D. Such format shall be used on or after January 1, 2011 when submitting for *Department* acceptance any amendment to an existing *fire safety and evacuation plan*. *Fire drills* required by FC405.2 shall be conducted in such buildings by a *certificate of fitness* holder for fire drill conductor.

(p) Department Review and Acceptance. When required by the Fire Code or *rule* or directed by the *Department*, *fire safety and evacuation plans* shall be filed in accordance with the following provisions:

(1) Filing for Department review. The *fire safety and evacuation plan* for a building shall be filed by the *owner*, or with the *owner*'s written approval, with the *Bureau of Fire Prevention* at Fire Department Headquarters, together with the applicable application form and fee. Unless otherwise specified by the *Department*, the filing shall consist of one (1) paper copy of the plan (including all applicable appendices), and one (1) compact disk containing the floor plans, in either DWG or DWF format.

(2) Acceptance. The *Department* will issue a letter accepting a *fire safety and evacuation plan* that the *Department* determines is complete and, in the *Department*'s judgment, satisfactorily sets forth the circumstances and sufficiently details the procedures by which *building occupants* will be directed to *shelter in place*, relocate in building, partially evacuate or evacuate the building.

(3) Notice and correction of deficiencies. The *Department* will issue a letter of deficiency for a *fire safety and evacuation plan* that the *Department* determines is incomplete or deficient in any material respect. Such plan shall be amended and resubmitted to the *Department* within 30 days after the date of the letter of deficiency, unless the letter of deficiency authorizes a greater period of time. An amended *fire safety and evacuation plan* filed with the *Department* after the allowed time shall be treated as a new (original) filing.

(4) Filing of accepted plan. After all deficiencies have been addressed and the applicant notified that the plan has been accepted, three (3) paper copies of the *fire safety and evacuation plan* (including all applicable appendices), at least one (1) of which shall contain an original *owner* certification, and two (2) compact disks containing the *fire safety and evacuation plan*, utilizing standard, commercially-available software acceptable to the *Department*, and the floor plans, in either DWG or DWF format, shall be filed with the *Department*.

(5) Plan review fee. *Fire safety and evacuation plans* filed for *Department* review and acceptance shall be accompanied by the plan review fee set forth in FC Appendix A.

(q) Periodic Review and Amendment

(1) The *owner* shall cause the *fire safety and evacuation plan* to be reviewed at least annually. An entry shall be made in the FSP logbook that such review has been conducted and whether amendment of the plan is required.

(2) The *fire safety and evacuation plan* shall be amended to reflect significant changes in building operation or staff responsibilities, or in the design and arrangement or use and occupancy of the building, that affect the *fire safety and evacuation plan*. Such amendments shall be submitted in a timely manner, but in no event later than the occupancy of the part of the building that has been reconfigured for an existing or new employer of *building occupants*.

(3) Changes in the fire safety director or other *FSP staff* designated in the *fire safety and evacuation plan*, excluding fire safety wardens and deputy fire safety wardens, shall be reported to the *Department* by filing a change in *FSP staff* amendment on not less than a semi-annual basis, using the forms set forth in the appendices to this section.

(r) Time for implementation. Within 30 days from the date of *Department* acceptance of the *fire safety and evacuation plan*, an *owner* shall have in place trained *FSP staff* and otherwise be capable of implementing the *fire safety and evacuation plan* at the *premises* and otherwise complying with the requirements of this section.

(s) Recordkeeping Requirements

(1) Logbook required. An FSP logbook shall be maintained at an *approved* location on the *premises* (where the building is provided with one, at the *fire command center*) for purposes of documenting compliance with the requirements of the Fire Code and this section relating to the *fire safety and evacuation plan*, including any *fires* or other incidents, identification of *FSP staff* on duty at the *premises*, and the conduct of *fire drills* and *FSP staff* training. The FSP logbook may be consolidated with the *EAP* logbook required pursuant to R404-02(m).

(2) Format. The FSP logbook shall be a bound journal with consecutively numbered pages, unless the *Department* has *approved* an alternative form of electronic recordkeeping. The front cover shall be marked: "FSP Logbook" and the address of the building.

(3) Entries. The entries made in the FSP logbook shall include the following information.

(A) FSP staffing. Identification of the *fire safety/EAP director* and *deputy fire safety/EAP director(s)* on duty each day or shift during *regular business hours*.

(B) Fires and other incidents. The occurrence of any fire, activation of the *fire alarm system*, or other fire-related incident.

(C) Implementation of the fire safety and evacuation plan. Entries shall be made of any *evacuation*, *partial evacuation* or other implementation of the *fire safety and evacuation plan*, including the affected floors, *in-building relocation areas* to which they were directed or other directions given.

(D) Fire drills. FSP logbook entries shall include:

(*1*) the date and time of drill;

(*2*) the person(s) conducting the drill;

(*3*) the *FSP staff* members participating in the drill;

(*4*) identification of the floors and the number of *building occupants* participating in drill;

(*5*) the type of drill conducted (live or computerized instruction);

(*6*) the special needs addressed;

(*7*) the problems encountered; and

(*8*) for a *partial evacuation* or *evacuation*, the weather conditions and time required to accomplish the evacuation.

(E) FSP staff training:

(*1)* the date of training session;

(*2*) the person(s) conducting the training session, including if required by FC401.6.1, the person's *certificate of fitness* number;

(*3*) the persons attending the training session; and

(*4*) the type of training session conducted (live or computerized instruction).

(F) *FSP staff* practical (on-site) examinations, where required.

(G) FSP amendments.

(H) The name, address, and *certificate of fitness* or other license number of any contractor responsible for inspecting, testing and/or otherwise maintaining the building's *fire protection systems* and the other equipment and operations affecting building fire safety, as set forth in the appendices to this section.

(4) Retention. Pursuant to FC107.7, the FSP logbook shall be kept at the *premises* for a period of at least three (3) years, and shall be made available for inspection by any *Department* representative.

(t) Obligations of Building Occupants and Employers of Building Occupants

(1) Building occupants. All *building occupants*:

(A) shall comply with the directions of the fire safety director and *FSP staff* upon an announcement that the *fire safety and evacuation plan* has been implemented, including any *shelter in place*, *in-building relocation*, *partial evacuation* or *evacuation* directed by the fire safety director or other designated *FSP staff.*

(B) shall cooperate with and participate in *fire drills*; and

(C) are encouraged to identify themselves to the appropriate building staff if they would require assistance in the event of an *in-building relocation*, *partial evacuation* or *evacuation*.

(2) Employers of building occupants. All employers of *building occupants* shall:

(A) promptly distribute to *building occupants* who are their employees any educational materials regarding the *fire safety and evacuation plan* provided to the employer by the *owner*;

(B) comply with the requirements of the *fire safety and evacuation plan* and R404-01(t)(1), and instruct their employees who are *building occupants* to do so;

(C) assign or allow responsible employees to serve as *FSP staff*, and require such employees to conscientiously perform their duties in accordance with the *fire safety and evacuation plan*; and

(D) establish and maintain a system of assigning responsibility for accounting for employees present in the building so that an accounting can be made in the event of an *in-building relocation*, *partial evacuation* or *evacuation*.

APPENDIX A-1

FIRE SAFETY AND EVACUATION PLAN FORMAT

HOTEL/MOTEL (R-1) OCCUPANCIES

The Fire Safety and Evacuation Plan required by New York City Fire Code (FC) Section FC404.2.1 and Fire Department rule (R) 3 RCNY 404-01 shall include the text of and conform in all respects to this format. Instructions, shown in italics, should not be included in the plan. Such format shall be used for any new fire safety and evacuation plan submitted for Department acceptance on or after January 1, 2011, and any amendment to an existing fire safety and evacuation plan, other than FSP staff changes, adopted on or after such date.

The Fire Safety and Evacuation Plan may make reference at any point to additional accompanying attachments, tables and/or other supporting information or documentation, including the attachments and tables prescribed by the format for various Fire Safety and Evacuation Plan information.

A copy of the Fire Safety and Evacuation Plan, Building Information Card and floor plans shall be kept at the fire command center (commonly referred to as the fire command station).

Questions regarding the format and submission of the Fire Safety and Evacuation Plan may be directed to the Emergency Planning and Preparedness Unit of the Bureau of Fire Prevention at Fire Department Headquarters.

1. Owner's Certification

   I hereby certify that this Fire Safety and Evacuation Plan is in compliance with the requirements of FC404.2.1 and R404-01. This Fire Safety and Evacuation Plan sets forth the circumstances and procedures for the sheltering in place, in-building relocation, partial evacuation or evacuation of building occupants in response to a fire.

   _____ _____

   Owner's signature Date

"Owner" is defined in R404-01(b) as "the fee owner or lessee of the building, or other person or entity having charge thereof."

2. Building Information

   2.1 Name of hotel/motel and complete building address

   2.2 Building owner information

      2.2.1 Name
      2.2.2 Mailing address
      2.2.3 Building Identification Number

2.2.4 Telephone number(s)
2.2.5 Cellular telephone number(s)
2.2.6 Fax number(s)
2.2.7 E-mail address

2.3 Height of building, and number of stories above and below grade

2.4 Lawful use and occupancy
Attach a copy of current Certificate of Occupancy (or Schedule A if building is under construction) for the building. The information contained in this plan should be consistent with the Certificate of Occupancy.

2.5 Indicate individual floor occupancy loading in Appendix A-1, Table 2.
List all building floors in Appendix A-1, Table 2, including all below-grade floors. Floors that have no occupants, such as mechanical equipment room floors, and floors that are not part of the FSP, such as residentially occupied floors, shall have such information noted in the table for such floor.

2.6 Fire Command Center

2.6.1 Location
Specify the floor on which the fire command center is located, its location on such floor, and the building entrance most accessible to the fire command center.

2.6.2 Building communications
Indicate the areas of the building with which the fire command center has communications capabilities, including elevator cars, fire pump rooms, mechanical equipment rooms, elevator control rooms, and individual floors. Only include communications equipment installed in accordance with the Building Code, and indicate if such communication capabilities are one-way or two-way.

2.7 Signage

2.7.1 Elevator lobbies. Floor number signs, elevator bank designation signs, and floor diagram signs (showing the route of egress) have been provided at elevator lobbies in compliance with the requirements of the New York City Building Code.

2.7.2 Stairwells. Stairwell identification signs have been posted on the corridor sides of stairwell doors and floor number signs have been posted on the stairwell side of stairwell doors in compliance with the requirements of the New York City Building Code.

2.7.3 Guest room doors. Signs with floor diagrams have been posted on or immediately adjacent to every required egress door from each guest room in compliance with the requirements of the FC408.8.1.

3. FSP Staff Designations, Duties and Responsibilities

3.1 Fire Safety Director

3.1.1 Identify and provide required information on Appendix A-1, Attachment 1, regarding the individual designated as Fire Safety Director.

3.1.2 Detail the duties and responsibilities of the Fire Safety Director.
List duties and responsibilities set forth in R404-01(k)(2)(B) and FC401.6.5, and any additional duties or responsibilities not specified in such section If no additional duties or responsibilities are assigned, indicate same in the plan.

3.1.3 Indicate how the Fire Safety Director will be identifiable during drills and emergencies.
(e.g., cap, vest or armband)

3.2 Deputy Fire Safety Director

3.2.1 Identify and provide required information on Appendix A-1, Attachment 2 regarding the individuals designated as Deputy Fire Safety Director.
The fire safety director or an individual designated as a deputy fire safety director must be on duty in the building at all times. The building's fire safety director and individuals designated as a deputy fire safety director must be indicated on Appendix A-1, Attachment 1 and 2, respectively.

3.2.2 Detail the duties and responsibilities for each Deputy Fire Safety Director
List duties and responsibilities set forth in R404-01(k)(2)(C), and any additional duties or responsibilities not specified in such section. Any duties and responsibilities stated elsewhere in the FSP shall also be listed in this section. If no additional duties or responsibilities are assigned, indicate same in the plan.

3.2.3 Indicate how the Deputy Fire Safety Director will be identifiable during emergencies.
(e.g., cap, vest or armband)

3.3 Fire Safety Brigade.

3.3.1 Identify and provide required information on Appendix A-1, Table 1, regarding the individuals designated as Fire Safety Brigade members.
Provide such information in Appendix A-1, Table 1.

3.3.2 Detail the duties and responsibilities for each Fire Safety Brigade member
List the general duties and responsibilities set forth in R404-01(k)(2)(D) in this section. In Appendix A-1, Table 1 list specific duties and responsibilities for each brigade member.

3.3.3 Indicate how the Fire Safety Brigade members will be identifiable during emergencies.
(e.g., cap, vest or armband)

4. Fire Safety and Evacuation Instructions

4.1 General Statement. The following factors shall be expeditiously determined and considered in implementing the fire safety and evacuation plan in the event of a fire in the building:

4.1.1 Location of the fire (floors and areas on floors).

4.1.2 Severity of the fire.

4.1.3 Floors affected by smoke conditions.

4.1.4 Stairwells affected by smoke conditions.

4.1.5 Floors occupied at the time of the fire and the number of building occupants in such areas.

4.2 Implementation of Fire Safety and Evacuation Plan

4.2.1 Call 911 and report fire and (if known) fire location.

4.2.2 Mobilize FSP safety brigade.

4.2.3 Identify stairwell(s) for evacuation of building occupants and stairwell(s) for use by responding firefighting personnel.

4.2.4 Make announcement to building occupants informing them of the fire condition and its location. Instruct them not to use the elevators unless directed to do so by firefighting personnel.

4.2.5 Instruct building occupants on the fire floor and the floor above the fire floor to immediately leave these floors, and evacuate the building or relocate to another safe location within the building at least two (2) floors below the fire floor. Identify the stairwell(s) or other routes of egress for their use and direct them to use only those stairwell(s) or routes of egress. Instruct building occupants to close guest room doors and stairwell doors behind them.

Indicate in Appendix A-1, Table 3 the route to in-building relocation areas. Indicate in Appendix A-1, Table 4 in-building relocation areas. Make reference in this section to these tables.

4.2.6 Instruct building occupants on the floor below the fire floor to immediately leave the floor, and evacuate the building or relocate to another safe location within the building below the fire floor if the building is provided with a fire alarm system designed to automatically alert building occupants on the floor below the fire floor, or which can be and has been programmed to provide such alert on such floor. Buildings not provided with such automatic fire alarm system shall evacuate the

floor below the fire floor if the building is designed or equipped to alert building occupants on that floor by voice announcements and activation of visible alarm notification appliances. Identify the stairwell(s) or other routes of egress for their use and direct them to use only those stairwell(s) or routes of egress. Instruct building occupants to close guest room doors and stairwell doors behind them.

Indicate in Appendix A-1, Table 3 the route to in-building relocation areas. Indicate in Appendix A-1, Table 4 in-building relocation areas. Make reference in this section to these tables.

4.2.7 Building occupants may be instructed to exit the stairwell at a designated floor if the stairwell is needed for responding firefighting personnel.

4.2.8 Instruct fire safety brigade to assist building occupants with special needs who are unable to use the stairwell or other designated route of egress without assistance.

4.2.9 Unless fire and smoke conditions warrant otherwise, instruct building occupants on other floors to *shelter in place* and not move around the building, pending further direction from the fire safety director or firefighting personnel.

4.2.10 Monitor the progress of the fire and smoke conditions by monitoring the fire alarm control panel and maintaining regular communication with FSP brigade.

4.3 Use of Elevators. Elevators shall not be used to implement the fire safety and evacuation plan, except under the following circumstances:

4.3.1 Where such use is conducted or authorized by firefighting personnel.

4.3.2 Where such use is made necessary by fire, heat or smoke conditions in stairwell, preventing or hindering the evacuation or in-building relocation of building occupants, and the fire safety director or deputy fire safety director determines that the elevators can be safely used, subject to the following provisions:

4.3.2.1 Elevators which operate in a shaft that does not serve (stop at) the fire floor or have openings on the fire floor may be used. Elevators serving (stopping at) the fire floor or having openings on the fire floor shall not be used under any circumstances.

4.3.2.2 Only elevators provided with two-way voice communication to the *fire command center* in accordance with Building Code requirements may be used for these purposes.

4.3.2.3 Movement of elevators shall be controlled either by operation in manual mode by an *FSP staff* member or at the elevator control panel in the lobby, under the direct supervision of the fire safety director.

4.4 Procedures for identifying building occupants who require assistance, and the procedures for providing such assistance

Include in statement that a list of such occupants shall be prepared and maintained at the fire command center. Also state in this plan that fire brigade members will be designated to assist such occupants. Elevator(s) shall not be designated as a procedure for movement of such building occupants. Fire brigade members designated for such purpose shall be identified on Appendix A-1, Table 1.

5. Building Maintenance Program

The fire safety and evacuation plan shall indicate the type of system, maintenance required, and personnel responsible for inspecting, testing and otherwise overseeing the maintenance of the following fire protection systems and the other equipment and operations affecting building fire safety (mark "N/A" if the building is not provided with such a system):

5.1 Sprinkler and standpipe systems

5.1.1 Maintenance required. Comply with FC901.6 (referencing National Fire Protection Association Standard 25), and 3 RCNY Chapter 9 (including maintenance of sprinkler system pressure tanks, standpipe system pressure reducing devices, and periodic testing of fire department connections). *Include any additional maintenance procedures.*

5.1.2 Responsible personnel

Indicate the name and number of the certificate of fitness holder (if applicable) or other building personnel (by job title). If inspection, testing or other maintenance is to be performed by a contractor, indicate as much in the plan, and identify the contractor in the FSP logbook.

5.2 Fire alarm systems

5.2.1. Maintenance required. Comply with FC901.6 (referencing National Fire Protection Association Standard 72), and 3 RCNY Chapter 9 (including fire alarm recordkeeping and smoke detector maintenance, testing and recordkeeping).

Include any additional maintenance procedures.

5.2.2 Responsible personnel

Indicate the name and number of the certificate of fitness holder (if applicable) or other building personnel (by job title). If inspection, testing or other maintenance is to be performed by a contractor, indicate as much in the plan, and identify the contractor in the FSP logbook.

5.3 Emergency power systems

5.3.1 Maintenance required. Comply with FC 604.3 and 604.4 (referencing National Fire Protection Association Standards 110 and 111).
Include any additional maintenance procedures.

5.3.2 Responsible personnel
Indicate the name and number of the certificate of fitness holder (if applicable) or other building personnel (by job title). If inspection, testing or other maintenance is to be performed by a contractor, indicate as much in the plan, and identify the contractor in the FSP logbook.

5.4 Phase I and Phase II elevator operations

5.4.1 Maintenance required. Comply with FC607.5.
Include any additional maintenance procedures.

5.4.2 Responsible personnel
Indicate the name and number of the certificate of fitness holder (if applicable) or other building personnel (by job title). If inspection, testing or other maintenance is to be performed by a contractor, indicate as much in the plan, and identify the contractor in the FSP logbook.

5.5 Smoke control systems

5.5.1 Maintenance required. Comply with FC909.1.
Include any additional maintenance procedures.

5.5.2 Responsible personnel
Indicate the name and number of the certificate of fitness holder (if applicable) or other building personnel (by job title). If inspection, testing or other maintenance is to be performed by a contractor, indicate as much in the plan, and identify the contractor in the FSP logbook.

5.6 Commercial cooking equipment systems

5.6.1 Maintenance required. Comply with FC904.11.
Include any additional maintenance procedures.

5.6.2 Responsible personnel
Indicate the name and number of the certificate of fitness holder (if applicable) or other building personnel (by job title). If inspection, testing or other maintenance is to be performed by a contractor, indicate as much in the plan, and identify the contractor in the FSP logbook.

5.7 Means of egress

5.7.1 Maintenance required. Comply with FC 1027.3 and 1027.4.

5.7.2 Responsible personnel.
Indicate the name and number of the certificate of fitness holder (if applicable) or other building personnel (by job title).

5.8 Hot work operations

5.8.1 Maintenance required. Comply with FC Chapter 26 and 3 RCNY 2605-01 (use of a flammable gas in citywide hot work operations).
Include any additional maintenance procedures.

5.8.2 Responsible personnel
Indicate the name and number of the certificate of fitness holder (if applicable) or other building personnel (by job title).

5.9 Decorations

5.9.1 Maintenance required. Comply with FC805 and 3 RCNY 805-01 (flame-resistant decorations).
Include any additional maintenance procedures.

5.9.2 Responsible personnel
Indicate the name and number of the certificate of fitness holder (if applicable) or other building personnel (by job title).

5.10 Portable fire extinguishers

5.10.1 Maintenance required. Comply with FC906 (referencing National Fire Protection Association Standard 10).
Include any additional maintenance procedures.

5.10.2 Responsible personnel
Indicate the name and number of the certificate of fitness holder (if applicable) or other building personnel (by job title).

5.11 Accumulation of rubbish and combustible waste

5.11.1 Maintenance required. Comply with FC304.
Include any additional maintenance procedures.

5.11.2 Responsible personnel
Indicate the name and number of the certificate of fitness holder (if applicable) or other building personnel (by job title).

6. Floor Plans. Annexed to this plan are floor plans complying with the requirements of R404-01(d)(7).
Evacuation routes shall be shown with the permanent partitions which create the corridors. Corridors, exit access, fire barriers and areas of refuge required to be depicted on such plan shall be defined as set forth in Sections 702 and 1002 of the 2008 Building Code.

7. Sprinkler and Standpipe System Riser Diagram. Annexed to this plan is a single sprinkler and standpipe system riser diagram complying with the requirements of R404-01(d)(7)(C).

Symbols used on the riser diagram shall conform to industry standards, and shall be listed on a legend table indicating their meaning. All floors of the building, including floors below grade, shall be shown on the diagram, except floors that are substantially similar need not be individually shown but may be identified on the riser diagram as typical.

8. Building Information Card. Annexed to this Fire Safety and Evacuation Plan, as Appendix B-1, is the Building Information Card complying with the requirements of R404-01(k)(1)(A).
The Building Information Card (BIC) must conform to the format of Appendix B-1.

9. Building Profile. Annexed to this Fire Safety and Evacuation Plan, as Appendix D, is the Building Profile complying with the requirements of R404-01(k)(1)(B).
The Building Profile must conform to the format of Appendix D. Provide all of the information requested, without reference to other sections of the plan or the Building Information Card, even if the information requested is duplicative.

Fire Safety and Evacuation Plan (Appendix A-1)
Hotel/Motel Occupancies

Attachment 1

FIRE SAFETY DIRECTOR

BUILDING ADDRESS: _____

_____

Fire Safety Director:

Name: _____

FDNY Certificate of Fitness No.: _____

Regular Work Location: _____

Regular Work Days and Hours: _____

Telephone: _____

Cellular Telephone: _____

Fax: _____

E-Mail Address: _____

Other Contact Information: _____

_____

_____ _____

Signature of Owner or Authorized Representative Date

Fire Safety and Evacuation Plan (Appendix A-1)
Hotel/Motel Occupancies

Attachment 2

DEPUTY FIRE SAFETY DIRECTOR

BUILDING ADDRESS: _____

_____

Deputy Fire Safety/EAP Director:

Name: _____

FDNY Certificate of Fitness No.: _____

Regular Work Location: _____

Regular Work Days and Hours: _____

Telephone: _____

Cellular Telephone: _____

Fax: _____

E-Mail Address: _____

Other Contact Information: _____

_____

_____ _____

Signature of Owner or Authorized Representative Date

Complete a separate attachment for each Deputy Fire Safety/EAP Director.

Fire Safety and Evacuation Plan (Appendix A-1)
Hotel/Motel Occupancies

Table 1

FIRE SAFETY BRIGADE MEMBERS

FSP Assignment *(minimum number of fire safety brigade members required to be designated for each assignment is indicated in parentheses)*	Name	Title *(e.g., building manager, porter, security guard)*	Regular Days and Hours of work *(e.g., M-F 9-5)*	Work Location Telephone No.	Other Contact Information *(e.g., cell phone number, e-mail address, walkie-talkies)*
Implement evacuation of floors (1)					
Control of small fires (2)					
Coordinate communications with fire command center (1)					
Remain on floor below fire to provide information to responding firefighters (1)					
Coordinate assistance to building occupants with special needs (1)					

The Fire Safety Director and Deputy Fire Safety Directors cannot be members of the Fire Safety Brigade. Any assignments stated elsewhere in the Fire Safety and Evacuation Plan for brigade members shall also be listed in this table.

_____ _____ _____

Building Address | Signature of Owner or Authorized Representative | Date

Fire Safety and Evacuation Plan (Appendix A-1)
Hotel/Motel Occupancies

Table 2

NUMBER OF BUILDING OCCUPANTS

Floor	# Occupants	Floor	# Occupants	Floor	# Occupants

Provide information for all floors, including those that are below grade, those having no building occupants, and those that are not included in the FSP such as floors occupied as residential spaces. In addition to regular building occupants, include the average number of visitors present on each floor on a typical work day. The occupant load specified in this table will be compared to the Certificate of Occupancy.

Total # of Occupants: _____

_____ Building Address

_____ Signature of Owner or Authorized Representative

_____ Date

Fire Safety and Evacuation Plan (Appendix A-1)
Hotel/Motel Occupancies

Table 3

IN-BUILDING RELOCATION AREA ROUTES

	Floor No.	Routes to in-building relocation areas *(e.g. 6th floor occupants will use the IBRA on the 4th floor, accessed via corridors to stairwell B)*	Stairwell route terminus *(e.g. stairwell B to 1st floor 42nd Street exit)*
Primary			
Alternate			
Primary			
Alternate			
Primary			
Alternate			
Primary			
Alternate			

This table is used to provide a floor by floor listing of the required primary and alternate evacuation routes to in-building relocation areas (IBRA). All floors must be listed, including below grade floors. Floors that have no building occupants, such as MER floors, or floors that are not part of the FSP, such as residentially occupied floors shall be noted in the table for that floor number. Information provided in this table will be cross-referenced with building occupant information provided in Appendix A-1, Table 2. For each occupied floor there must be a primary and an alternate route to an IBRA. The alternate route must utilize a different stairwell than the primary route. An alternate IBRA need not be provided. Any IBRA identified on this table must also be identified in Appendix A-1, Table 4.

_____ _____ _____

Building Address | Signature of Owner or Authorized Representative | Date

Fire Safety and Evacuation Plan (Appendix A-1)
Hotel/Motel Occupancies

Table 4

IN-BUILDING RELOCATION AREAS

Location of IBRA *(i.e. 2nd floor conference room)*	Floors relocating to this IBRA	Max IBRA occupant capacity *(estimated)*

Provide a floor by floor listing of the pre-designated in-building relocation areas (IBRA) corresponding to Appendix A-1, Table 3 information. An IBRA must have an occupant capacity sufficient to accommodate the number of building occupants assigned to such IBRA. Generally, this will include three floors of building occupants; those relocated from the fire floor, the floor above the fire and the floor below the fire, to an IBRA two floors below the fire.

Building Address	Signature of Owner or Authorized Representative	Date

APPENDIX A-2

COMBINED FIRE SAFETY AND EVACUATION PLAN AND EMERGENCY ACTION PLAN FORMAT

OFFICE BUILDINGS (B) OCCUPANCIES

The Fire Safety and Evacuation Plan required by New York City Fire Code (FC) Section FC404.2.1 and Fire Department rule (R) 3 RCNY 404-01, and the Emergency Action Plan required by New York City Fire Code (FC) Section FC404.2.2 and Fire Department rule (R) 3 RCNY 404-02 shall include the text of and conform in all respects to this format. Instructions, shown in italics, should not be included in the plan. This combined format shall be used on or after January 1, 2011, when submitting for Department acceptance any new fire safety and evacuation plan or emergency action plan, or any amendment to an existing fire safety and evacuation plan or emergency action plan, other than FSP staff or fire safety/EAP staff changes.

The "General Procedures" sections of this plan are intended to afford the preparer of the EAP the opportunity to present the procedures to be implemented in the event of each type of emergency, and any explanation or analysis, in whatever manner and in as much detail as the preparer deems necessary or appropriate to clearly and completely communicate such information.

The "Specific Requirements" and "Building Components" sections of the EAP are intended to ensure that the plan is complete and addresses each of the requirements of the rule. Should the specific information requested in these sections be detailed in the General Procedures section or an attachment or table, it is sufficient to reference where the information is set forth. It is not necessary to repeat the information.

Similarly, if the procedures for one type of emergency are identical (in whole or in part) to those for another emergency, a statement to that effect and a reference to the prior section are sufficient and the information need not be repeated.

The plan may make reference at any point to additional accompanying attachments, tables and/or other supporting information or documentation, including the attachments and tables prescribed by the format for various plan information.

A copy of the plan, Building Information Card and representative floor plans shall be kept at the fire command center (commonly referred to as the fire command station).

Questions regarding the format and submission of the plan may be directed to the Emergency Planning and Preparedness Unit of the Bureau of Fire Prevention at Fire Department Headquarters.

1. Owner's Certification

I hereby certify that this plan is in compliance with the requirements of FC 404.2.1 and 404.2.2, and R 404-01 and 404-02. This plan sets forth the circumstances and procedures for the sheltering in place, in-building relocation, partial evacuation or evacuation of building occupants in response to a fire, and to a non-fire-related emergency involving an explosion, biological, chemical, radiological, or nuclear incident or release, natural disaster, or other emergency condition in or proximate to the building, or the threat thereof.

_____ _____

Owner's signature Date

"Owner" is defined in R404-01(b) as "the fee owner or lessee of the building, or other person or entity having charge thereof."

2. Building Information

2.1 Complete building address

2.2 Building owner information

2.2.1 Name
2.2.2 Mailing address
2.2.3 Building Identification Number
2.2.4 Telephone number(s)
2.2.5 Cellular telephone number(s)
2.2.6 Fax number(s)
2.2.7 E-mail address

2.3 Height of building, and number of stories above and below grade.

2.4 Lawful use and occupancy
Attach a copy of current Certificate of Occupancy (or Schedule A if building is under construction) for the building. The information contained in this plan should be consistent with the Certificate of Occupancy.

2.5 Indicate individual floor occupancy loading in Appendix A-2, Table 6.
List all building floors in Appendix A-2, Table 6, including all below-grade floors. Floors that have no occupants, such as mechanical equipment room floors, and floors that are not part of this plan, such as residentially occupied floors, shall have such information noted in the table for such floor.

2.6 Fire Command Center

2.6.1 Location
Specify the floor on which the fire command center is located, its location on such floor, and the building entrance most accessible to the fire command center.

2.6.2 Building communications

Indicate the areas of the building with which the fire command center has communications capabilities, including elevators cars, fire pump rooms, mechanical equipment rooms, elevator control rooms, and individual floors. Only include communications equipment installed in accordance with the Building Code, and indicate if such communication is one-way or two-way.

2.7 Signage

2.7.1 Elevator lobbies. Floor number signs, elevator bank designation signs, and floor diagram signs (showing the route of egress) have been provided at elevator lobbies in compliance with the requirements of the New York City Building Code.

2.7.2 Stairwell. Stairwell identification signs have been posted on the corridor sides of stairwell doors and floor number signs have been posted on the stairwell side of stairwell doors in compliance with the requirements of the New York City Building Code.

2.8 Times of day and days of week when building is occupied

2.8.1 Regular business hours.
List all regular business hours. FC402 defines "regular business hours" as "times of day and days of the week during which a building or occupancy is normally occupied and business is conducted, and any time when an office building is occupied by more than 500 persons on one or more floors, including street level, or by more than 100 persons on one or more floors other than street level."

2.8.2 Times of day and days of week other than regular business hours when the building is occupied
This would include times when the building is occupied by cleaning and maintenance staff.

3. FS/EAP Staff Designations, Duties and Responsibilities

3.1 Fire Safety/EAP Director

3.1.1 Identify and provide required information on Appendix A-2, Attachment 1, regarding the individual designated as Fire Safety/EAP Director.

3.1.2 Detail the duties and responsibilities of the Fire Safety/EAP Director.
List duties and responsibilities set forth in R404-01(n)(2)(B)(2) and R404-02(h)(1)(B), and any additional duties or responsibilities not specified in such sections. Any duties and responsibilities stated elsewhere in the plan, including Appendix A-2, Table 7, shall be referenced in this section, but need not be repeated. If no additional duties or responsibilities are assigned, indicate same in the plan.

3.1.3 Indicate how the Fire Safety/EAP Director will be identifiable during drills and emergencies.
(e.g., cap, vest or armband)

3.2 Deputy Fire Safety/EAP Director

3.2.1 Identify and provide required information on Appendix A-2, Attachment 2 regarding the individuals designated as Deputy Fire Safety/EAP Director.
During all "regular business hours" identified in Section 2.8.1 of this plan the building Fire Safety/EAP Director or individual designated as a Deputy Fire Safety/EAP Director must be on duty in the building. The building's Fire Safety/EAP Director or an individual designated as a Deputy Fire Safety/EAP Director must be indicated on Appendix A-2, Attachment 1 or 2, for all such regular business hours.

3.2.2 Detail the duties and responsibilities for each Deputy Fire Safety/EAP Director.
List duties and responsibilities set forth in R404-01(n)(2)(C)(2) and R404-02(h)(2)(B), and any additional duties or responsibilities not specified in such sections. Any duties and responsibilities stated elsewhere in the plan, including Appendix A-2, Table 7, shall be referenced in this section, but need not be repeated. If no additional duties or responsibilities are assigned, indicate same in the plan.

3.2.3 Indicate how the Deputy Fire Safety/EAP Director will be identifiable during drills and emergencies.
(e.g., cap, vest or armband)

3.3 Fire Safety and EAP Building Evacuation Supervisor

3.3.1 Identify and provide required information on Appendix A-2, Attachment 3 regarding the individuals designated as Fire Safety and EAP Building Evacuation Supervisor.
As identified in Section 2.8.2 of this plan, at all times other than regular business hours when the building is occupied and no Fire Safety/EAP Director is on duty, a Fire Safety and EAP Building Evacuation Supervisor must be on duty in the building. The building's Fire Safety and EAP Building Evacuation Supervisor must be indicated on Appendix A-2, Attachment 3, for all such times. Complete a separate attachment for each Fire Safety and EAP Building Evacuation Supervisor.

3.3.2 Detail the duties and responsibilities for each Fire Safety and EAP Building Evacuation Supervisor.
List the duties and responsibilities set forth in R404-01(n)(2)(D)(2) and R404-02(h)(3)(B), and any additional duties or responsibilities not specified in such sections. Any duties and responsibilities stated elsewhere in the plan, including Appendix A-2, Table 7, shall be referenced in this section, but need not be repeated. If no additional duties or responsibilities are assigned, indicate same in the plan.

3.3.3 Indicate how the Fire Safety and EAP Building Evacuation Supervisor will be identifiable during drills and emergencies.
(e.g., cap, vest or armband)

3.4 Fire Safety and EAP Warden

3.4.1 Identify and provide required information on Appendix A-2, Table 1, regarding the individuals designated as EAP Warden.
Fire Safety and EAP Wardens must be indicated on Appendix A-2, Table 1, for all regular business hours identified in Section 2.8.1 of this plan.

3.4.2 Detail the duties and responsibilities for each Fire Safety and EAP Warden.
List the duties and responsibilities set forth in R404-01(n)(2)(E)(2) and R404-02(h)(4)(B), and any additional duties or responsibilities not specified in such sections. Any duties and responsibilities stated elsewhere in the plan, including Appendix A-2, Table 1 and 7, shall be referenced in this section, but need not be repeated. If no additional duties or responsibilities are assigned, indicate same in the plan.

3.4.3 Indicate how the Fire Safety and EAP Wardens will be identifiable during drills and emergencies.
(e.g., cap, vest or armband)

3.5 Deputy Fire Safety and EAP Warden

3.5.1 Identify and provide required information on Appendix A-2, Table 2, regarding the individuals designated as Deputy Fire Safety and EAP Warden.
Deputy Fire Safety and EAP Wardens must be indicated on Appendix A-2, Table 2, for all regular business hours identified in Section 2.8.1 of this plan.

3.5.2 Detail the duties and responsibilities for each Deputy Fire Safety and EAP Warden.
List the duties and responsibilities set forth in R404-01(n)(2)(F)(2) and R404-02(h)(5)(B), and any additional duties or responsibilities not specified in such sections. Any duties and responsibilities stated elsewhere in the plan, including Appendix A-2, Tables 2 and 7, shall be referenced in this section, but need not be repeated. If no additional duties or responsibilities are assigned, indicate same in the plan.

3.5.3 Indicate how the Deputy Fire Safety and EAP Wardens will be identifiable during drills and emergencies.
(e.g., cap, vest or armband)

3.6 Fire Safety and EAP Searchers

3.6.1 Identify and provide required information on Appendix A-2, Table 2A, regarding the individuals designated as Fire Safety and EAP Searchers.
Fire Safety and EAP Searchers must be indicated on Appendix A-2, Table 2A, for all regular business hours identified in Section 2.8.1 of this plan.

3.6.2 Detail the duties and responsibilities for each Fire Safety and EAP Searcher.
List duties and responsibilities set forth in R404-01(n)(2)(H)(2) and R404-02(h)(8)(B), and any additional duties or responsibilities not specified in such sections. Any duties and responsibilities stated elsewhere in the plan, including Appendix A-2, Tables 2A and

7, shall be referenced in this section, but need not be repeated. If no additional duties or responsibilities are assigned, indicate same in the plan.

3.6.3 Indicate how the Fire Safety and EAP Searchers will be identifiable during drills and emergencies.
(e.g., cap, vest or armband)

3.7 Fire Safety and EAP Brigade

3.7.1 Identify and provide required information on Appendix A-2, Table 3, regarding the individuals designated as Fire Safety and EAP Brigade members.
Fire Safety and EAP Brigade members *must be indicated on Appendix A-2, Table 3, for all regular business hours identified in Section 2.8.1 of this plan..*

3.7.2 Detail the duties and responsibilities for each Fire Safety and EAP Brigade member.
List duties and responsibilities set forth in R404-01(n)(2)(G)(2) and R404-02(h)(6)(B), and any additional duties or responsibilities not specified in such sections. Any duties and responsibilities stated elsewhere in the plan, including Appendix A-2, Table 3 and 7, shall be referenced in this section, but need not be repeated. If no additional duties or responsibilities are assigned, indicate same in the plan.

3.7.3 Indicate how the Fire Safety and EAP Brigade members will be identifiable during drills and emergencies.
(e.g., cap, vest or armband)

3.8 Critical Operations Staff (Building Personnel)

3.8.1 Identify and provide required information on Appendix A-2, Table 4, regarding the individuals designated as Critical Operations Staff (Building Personnel).
Building personnel who are being designated as Critical Operations Staff based on the fact that their duties are critical to the implementation of the EAP, such as the operation of building service equipment, must be included on Appendix A-2, Table 4, for all regular business hours identified in Section 2.8.1 of this plan. Building personnel identified as EAP Brigade members in Appendix A-2, Table 3, shall not be designated as Critical Operations Staff.

3.8.2 Detail the duties and responsibilities of each member of the Critical Operations Staff (Building Personnel).
List the duties and responsibilities set forth in R404-02(h)(7)(B), and any additional duties or responsibilities not specified in such section. Any duties and responsibilities stated elsewhere in the plan, including Appendix A-2, Table 7, shall be referenced in this section, but need not be repeated. If no additional duties or responsibilities are assigned, indicate same in the plan.

3.8.3 Indicate how the Critical Operations Staff (Building Personnel) will be identifiable during drills and emergencies.
(e.g., cap, vest or armband)

3.9 Critical Operations Staff (Office Employees)

3.9.1 Identify and provide required information on Appendix A-2, Table 5, regarding the individuals designated as Critical Operations Staff (Office Employees).

Critical Operations Staff (Office Employees) are not EAP staff members and have no responsibilities with respect to implementing the EAP. They should be included in the EAP and exempted from participation in EAP drills and/or delayed in participating in the implementation of the EAP only if the employer can demonstrate that the employee is performing a public safety function or essential service for the employer in which there is a compelling public interest in maintaining even in the event of an emergency. (See R404-02(d)(2)(G)). The basis for designating an office employee as Critical Operations Staff must be documented in writing and made available for inspection by Department representatives, upon request.

4. Fire Safety and Evacuation Instructions

4.1 General Statement. The following factors shall be expeditiously determined and considered in implementing the fire safety and evacuation plan in the event of a fire in the building:

4.1.1 Location of the fire (floors and areas on floors).

4.1.2 Severity of the fire.

4.1.3 Floors affected by smoke conditions.

4.1.4 Stairwells affected by smoke conditions.

4.1.5 Floors occupied at the time of the fire and the number of building occupants in such areas.

4.2 Implementation of Fire Safety and Evacuation Plan

4.2.1 Call 911 and report fire and (if known) fire location.

4.2.2 Mobilize FSP safety brigade.

4.2.3 Identify stairwell(s) for evacuation of building occupants and stairwell(s) for use by responding firefighting personnel.

4.2.4 Make announcement to building occupants informing them of the fire condition and its location. Instruct them not to use the elevators unless directed to do so by firefighting personnel.

4.2.5 Instruct building occupants on the fire floor and the floor above the fire floor to immediately leave these floors, and evacuate the building or

relocate to another safe location within the building below at least two (2) floors below the fire floor. Identify the stairwells(s) or other routes of egress for their use and direct them to use only those stairwells(s) or routes of egress. Instruct building occupants to close stairwell doors behind them.

Indicate in Appendix A-2, Table 8B the route to in-building relocation areas. Indicate in Appendix A-2, Table 8A in-building relocation areas. Make reference in this section to these tables.

4.2.6 Instruct building occupants on the floor below the fire floor to immediately leave the floor, and evacuate the building or relocate to another safe location within the building below the fire floor, if the building is provided with a fire alarm system designed to automatically alert building occupants on the floor below the fire floor, or which can be and has been programmed to provide such alert on such floor. Buildings not provided with such automatic fire alarm system shall evacuate the floor below the fire floor if the building is designed or equipped to alert building occupants on that floor by voice announcements and activation of visible alarm notification appliances. Identify the stairwell(s) or other routes of egress for their use and direct them to use only those stairwell(s) or routes of egress. Instruct building occupants to close stairwell doors behind them.

Indicate in Appendix A-2, Table 8B the route to in-building relocation areas. Indicate in Appendix A-2, Table 8A in-building relocation areas. Make reference in this section to these tables.

4.2.7 Building occupants may be instructed to exit the stairwell at a designated floor if the stairwell is needed for responding firefighting personnel.

4.2.8 Instruct fire safety brigade to assist building occupants with special needs who are unable to use the stairwells or other designated route of egress without assistance.

4.2.9 Unless fire and smoke conditions warrant otherwise, instruct building occupants on other floors to *shelter in place* and not move around the building, pending further direction from the fire safety director or firefighting personnel.

4.2.10 Monitor the progress of the fire and smoke conditions by monitoring the fire alarm control panel and maintaining regular communication with FSP brigade.

4.3 Use of Elevators. Elevators shall not be used to implement the fire safety and evacuation plan, except under the following circumstances:

4.3.1 Where such use is conducted or authorized by firefighting personnel.

4.3.2 Where such use is made necessary by fire, heat or smoke conditions in stairwells, preventing or hindering the evacuation or in-building relocation of building occupants, and the fire safety/EAP director or deputy fire safety/EAP director determines that the elevators can be safely used, subject to the following provisions:

4.3.2.1 Elevators which operate in a shaft that does not serve (stop at) the fire floor or have openings on the fire floor, may be used. Elevators serving (stopping at) the fire floor or having openings on the fire floor shall not be used under any circumstances.

4.3.2.2 Only elevators provided with two-way voice communication to the *fire command center* in accordance with Building Code requirements may be used for these purposes.

4.3.2.3 Movement of elevators shall be controlled either by operation in manual mode by an FSP staff member or at the elevator control panel in the lobby, under the direct supervision of the *fire safety/EAP director*.

4.4 Procedures for accounting for building occupants after completing in-building relocation or partial evacuation

Include a statement which provides the specific methods to be used to account for building occupants after completing in-building relocation/partial evacuation is implemented, and who will communicate such information back to the fire command center, and how it will be communicated.

4.5 Procedures for identifying building occupants who require assistance, and the procedures for providing such assistance

Include in statement that a list of such occupants shall be prepared and maintained at the fire command center. Also state in this plan that fire brigade members will be designated to assist such occupants. Elevator(s) shall not be designated as a procedure for movement of such building occupants. Fire brigade members designated for such purpose shall be identified on Appendix A-2, Table 3.

5. Emergency Action Plan for Explosions

5.1 General Statement.

Provide a general statement regarding explosions and implementation of the EAP. Such general statement shall include the following; that 911 will be notified; EAP staff and office personnel critical operations staff will be notified and consulted; elevators will be recalled to their lobby level; electro-magnetic door locks shall be released; available information will be analyzed to decide the most appropriate action (shelter-in-place, in-building relocation, partial evacuation and/or full evacuation) consistent with the EAP; and building occupants will be notified, via an emergency announcement, where and what has occurred, what provisions of the EAP are being implemented and why. For example, if an announcement is made to shelter in place, building occupants should be informed not to move about the building while a threat within the building is being assessed or addressed, or that the nature of a threat outside of the building makes leaving the building inadvisable.

Set forth below are the procedures that will be implemented during regular business hours in the event of an explosion in or proximate to the building, or the threat thereof.
Include the specific information requested. Where not applicable enter "N/A."

5.1.1 Shelter in Place

5.1.1.1 General Procedures.

Provide a statement and explanation of the specific procedures that will be implemented. Procedures identified in Section 5.1 of this plan should not be repeated in this section. A statement to the following effect shall be included as part of this section: "When shelter in place is implemented pursuant to this EAP building occupants will be told to remain at their present location."

5.1.1.2 Building Components or Systems.

5.1.1.2.1 Access to and egress from the building, including entrances, exits and stairwells.

Provide such information in Appendix A-2, Table 7, Section 2, and make reference to such table in this section. Also, provide in this section any applicable information not included in such table.

5.1.1.2.2 Elevator operation.

Provide such information in Appendix A-2, Table 7, Section 3, and make reference to such table in this section. Also, include statements that all elevators will be recalled to their lobby level where they will be assessed by EAP staff for safe use; that only elevators provided with two-way voice communication to the fire command center in accordance with the Building Code requirements will be used; and that such elevators, if deemed necessary, will be operated only in manual mode by trained EAP staff. Identify specific elevator(s) (bank letters and car numbers) which will be used for such purpose.

5.1.1.2.3 Ventilation system operation.

Provide such information in Appendix A-2, Table 7, Section 5, and make reference to such table in this section.

5.1.1.2.4 Openable windows.

Include a statement regarding the securing of openable windows.

5.1.1.2.5 Interior doors, including fire doors.

Include a statement that the electro-magnetic door release mechanisms (if present) will be manually released to ensure all re-entry doors are unlocked.

5.1.1.2.6 Electrical, natural gas, steam and other utility operations.

Provide such information in Appendix A-2, Table 7, Section 4, and make reference to such table in this section.

5.1.1.2.7 Fuel oil storage systems and associated pumps and piping.

Provide such information in Appendix A-2, Table 7, Section 4, and make reference to such table in this section.

5.1.2 In-Building Relocation

5.1.2.1 General Procedures.

Provide a statement and explanation of the specific procedures that will be implemented. Procedures identified in Section 5.1 of this plan should not be repeated in this section. A statement and explanation to the following effect shall be included as part of this section: "When an in-building relocation is implemented pursuant to this EAP building occupants will be told to move to their pre-designated in-building relocation areas (IBRA) which are areas that are more sheltered than the normal work areas."

5.1.2.2 Specific In-Building Relocation Requirements.

5.1.2.2.1 Designated in-building relocation areas.

Provide such information in Appendix A-2, Table 8, and make reference to such table in this section.

5.1.2.2.2 Designated routes by which building occupants would be directed to in-building relocation areas.

Provide such information in Appendix A-2, Table 8 and make reference to such table in this section. If building occupants will be directed to IBRA's on a floor other than the floor of their normal work location, complete routes to such IBRA's shall be designated. If the building occupants on a single floor will be directed to IBRA's on more than one floor specify how such areas will be assigned, such as by employer, room numbers or portions of the floor area.

5.1.2.2.3 Procedures for accounting for building occupants after completing in-building relocation.

Include a statement which provides the specific methods to be used to account for persons in the IBRA after an in-building relocation is implemented, who will communicate such information back to the fire command center, and how it will be communicated.

5.1.2.2.4 Procedures for identifying building occupants who require assistance, and the procedures for providing such assistance.

Include in statement that a list of such occupants shall be prepared and maintained at the fire command center. Also state in this plan that person(s) will be designated to assist such occupants, the elevator(s) designated for use in their movement, and specific personnel designated to operate such elevator(s). Person designated to operate the elevator(s) shall also be identified on Appendix A-2, Tables 3 and 4, with that assignment listed. Additionally, an alternative procedure for movement of such building occupants in the event that designated elevators are inoperable or unsafe for use shall be provided.

5.1.2.3 Building Components.

5.1.2.3.1 Access to and egress from the building, including entrances, exits and stairwells.
Same instructions as Section 5.1.1.2.1 of this plan.

5.1.2.3.2 Elevator operation.
Same instructions as Section 5.1.1.2.2 of this plan.

5.1.2.3.3 Ventilation system operation.
Same instructions as Section 5.1.1.2.3 of this plan.

5.1.2.3.4 Openable windows.
Same instructions as Section 5.1.1.2.4 of this plan.

5.1.2.3.5 Interior doors, including fire doors.
Same instructions as Section 5.1.1.2.5 of this plan.

5.1.2.3.6 Electrical, natural gas, steam and other utility operations.
Same instructions as Section 5.1.1.2.6 of this plan.

5.1.2.3.7 Fuel oil storage systems and associated pumps and piping.
Same instructions as Section 5.1.1.2.7 of this plan.

5.1.3 Partial Evacuation

5.1.3.1 General Procedures.
Provide a statement and explanation of the specific procedures that will be implemented. Procedures identified in Section 5.1 of this plan should not be repeated in this section. A statement and explanation to the following effect shall be included as a part of this section: "When a partial evacuation is implemented pursuant of the EAP is implemented, some (not all) of the building occupants will be instructed to evacuate the building and report to the pre-designated assembly area(s)."

5.1.3.2 Specific Partial Evacuation Requirements.

5.1.3.2.1 Location of exits, stairwells and elevators.
Provide such information in Appendix A-2, Table 7, Sections 2 and 3, and make reference to such table in this section.

5.1.3.2.2 Primary and alternate exit routes.
Provide such information in Appendix A-2, Table 9, and make reference to such table in this section.

5.1.3.2.3 Assembly areas.
Provide such information in Appendix A-2, Table 10, and make reference to such table in this section.

5.1.3.2.4 Procedures for accounting for building occupants after completing a partial evacuation.
Include a statement which provides the specific methods to be used to account for persons in the assembly areas after a partial evacuation is implemented, and who and how such information will be communicated back to the fire command center.

5.1.3.2.5 Procedures for identifying building occupants who require assistance, and the procedures for providing such assistance.
Same instructions as Section 5.1.2.2.4 of this plan.

5.1.3.3 Building Components.

5.1.3.3.1 Access to and egress from the building, including entrances, exits and stairwells.

Same instructions as Section 5.1.1.2.1 of this plan.

5.1.3.3.2 Elevator operation.

Same instructions as Section 5.1.1.2.2 of this plan.

5.1.3.3.3 Ventilation system operation.

Same instructions as Section 5.1.1.2.3 of this plan.

5.1.3.3.4 Openable windows.

Same instructions as Section 5.1.1.2.4 of this plan.

5.1.3.3.5 Interior doors, including fire doors.

Same instructions as Section 5.1.1.2.5 of this plan.

5.1.3.3.6 Electrical, natural gas, steam and other utility operations.

Same instructions as Section 5.1.1.2.6 of this plan.

5.1.3.3.7 Fuel oil storage systems and associated pumps and piping.

Same instructions as Section 5.1.1.2.7 of this plan.

5.1.4 Evacuation

5.1.4.1 General Procedures.

Provide a statement and explanation of the specific procedures that will be implemented. Procedures identified in Section 5.1 of this plan should not be repeated in this section. A statement and explanation to the following effect shall be included as part of this section: "When the evacuation provision of the EAP is implemented, all building occupants will be told to evacuate the building and report to the pre-designated assembly area(s)."

5.1.4.2 Specific Evacuation Requirements

5.1.4.2.1 Location of exits, stairwells and elevators.

Provide such information in Appendix A-2, Table 9, and make reference to such table in this section.

5.1.4.2.2 Primary and alternate exit routes.

Provide such information in Appendix A-2, Table 9, and make reference to such table in this section.

5.1.4.2.3 Assembly areas.

Same instructions as Section 5.1.3.2.3 of this plan.

5.1.4.2.4 Procedures for accounting for building occupants after completing an evacuation.

Include a statement which provides the specific methods to be used to account for persons in the assembly areas after an evacuation is implemented, and who and how such information will be communicated back to the fire command center.

5.1.4.2.5 Procedures for identifying building occupants who require assistance, and the procedures for providing such assistance.

Same instructions as Section 5.1.2.2.4 of this plan.

5.1.4.3 Building Components

5.1.4.3.1 Access to and egress from the building, including entrances, exits and stairwells.
Same instructions as Section 5.1.1.2.1 of this plan.

5.1.4.3.2 Elevator operations.
Same instructions as Section 5.1.1.2.2 of this plan.

5.1.4.3.3 Ventilation system operation.
Same instructions as Section 5.1.1.2.3 of this plan.

5.1.4.3.4 Openable windows.
Same instructions as Section 5.1.1.2.4 of this plan.

5.1.4.3.5 Interior doors, including fire doors.
Same instructions as Section 5.1.1.2.5 of this plan.

5.1.4.3.6 Electrical, natural gas, steam and other utility operations.
Same instructions as Section 5.1.1.2.6 of this plan.

5.1.4.3.7 Fuel oil storage systems and associated pumps and piping.
Same instructions as Section 5.1.1.2.7 of this plan.

5.2 Set forth the procedures that will be implemented at times other than regular business hours, if different from those set forth above.
During other than regular business hours it is often unlikely that a Fire Safety/EAP Director and all Brigade and Building Critical Operation Staff will be present in the building to implement the EAP. Provide a statement that describes the actions that will be taken when implementing the plan at such times and under such conditions. At a minimum, such statement shall indicate that the actions to be taken include an effort to account for building occupants, notifying 911, and making informative emergency announcements to the building occupants.

6. Emergency Action Plan for a Biological Incident or Release
Follow the same instructions for a biological incident or release that are provided in the corresponding section of this plan for explosions (Section 5). Be sure to add any information and detail any changes necessary for planning for a biological incident or release.

6.1 General Statement

Set forth below are the procedures that will be implemented during regular business hours in the event of a biological incident or release in or proximate to the building, or the threat thereof.

6.1.1 Shelter in Place

6.1.1.1 General Procedures.

6.1.1.2 Building Components or Systems

6.1.1.2.1 Access to and egress from the building, including entrances, exits and stairwells.

6.1.1.2.2 Elevator operation.

6.1.1.2.3 Ventilation system operation.

6.1.1.2.4 Openable windows.

6.1.1.2.5 Interior doors, including fire doors.

6.1.1.2.6 Electrical, natural gas, steam and other utility operations.

6.1.1.2.7 Fuel oil storage systems and associated pumps and piping.

6.1.2 In-Building Relocation

6.1.2.1 General Procedures.

6.1.2.2 Specific In-Building Relocation Requirements

6.1.2.2.1 Designated in-building relocation areas.

6.1.2.2.2 Designated routes by which building occupants would be directed to in-building relocation areas.

6.1.2.2.3 Procedures for accounting for building occupants after completing in-building relocation.

6.1.2.3 Building Components

6.1.2.3.1 Access to and egress from the building, including entrances, exits and stairwells.

6.1.2.3.2 Elevator operation.

6.1.2.3.3 Ventilation system operation.

6.1.2.3.4 Openable windows.

6.1.2.3.5 Interior doors, including fire doors.

6.1.2.3.6 Electrical, natural gas, steam and other utility operations.

6.1.2.3.7 Fuel oil storage systems and associated pumps and piping.

6.1.3 Partial Evacuation

6.1.3.1 General Procedures.

6.1.3.2 Specific Partial Evacuation Requirements

6.1.3.2.1 Location of exits, stairwells and elevators.

6.1.3.2.2 Primary and alternate exit routes.

6.1.3.2.3 Assembly areas.

6.1.3.2.4 Procedures of accounting for building occupants after completing a partial evacuation.

6.1.3.3 Building Components

6.1.3.3.1 Access to and egress from the building, including entrances, exits and stairwells.

6.1.3.3.2 Elevator operation.

6.1.3.3.3 Ventilation system operation.

6.1.3.3.4 Openable windows.

6.1.3.3.5 Interior doors, including fire doors.

6.1.3.3.6 Electrical, natural gas, steam and other utility operations.

6.1.3.3.7 Fuel oil storage systems and associated pumps and piping.

6.1.4 Evacuation.

6.1.4.1 General Procedures.

6.1.4.2 Specific Evacuation Requirements

6.1.4.2.1 Location of exits, stairwells and elevators.

6.1.4.2.2 Primary and alternate exit routes.

6.1.4.2.3 Assembly areas.

6.1.4.2.4 Procedures for accounting for building occupants after completing an evacuation.

6.1.4.3 Building Components

6.1.4.3.1 Access to and egress from the building, including entrances, exits and stairwells.

6.1.4.3.2 Elevator operations.

6.1.4.3.3 Ventilation system operation.

6.1.4.3.4 Openable windows.

6.1.4.3.5 Interior doors, including fire doors.

6.1.4.3.6 Electrical, natural gas, steam and other utility operations.

6.1.4.3.7 Fuel oil storage systems and associated pumps and piping.

6.2 Set forth the procedures that will be implemented at times other than regular business hours, if different from those set forth above.

7. Emergency Action Plan for a Chemical Incident or Release

Follow the same instructions for a chemical incident or release that are provided in the corresponding section of this plan for explosions (Section 5). Be sure to add any information and detail any changes necessary for planning for a chemical incident or release.

7.1 General Statement

Set forth below are the procedures that will be implemented during regular business hours in the event of a chemical incident or release in or proximate to the building, or the threat thereof.

7.1.1 Shelter in Place

7.1.1.1 General Procedures.

7.1.1.2 Building Components or Systems

7.1.1.2.1 Access to and egress from the building, including entrances, exits and stairwells.
7.1.1.2.2 Elevator operation.
7.1.1.2.3 Ventilation system operation.
7.1.1.2.4 Openable windows.
7.1.1.2.5 Interior doors, including fire doors.
7.1.1.2.6 Electrical, natural gas, steam and other utility operations.
7.1.1.2.7 Fuel oil storage systems and associated pumps and piping.

7.1.2 In-Building Relocation

7.1.2.1 General Procedures.

7.1.2.2 Specific In-Building Relocation Requirements
7.1.2.2.1 Designated in-building relocation areas.
7.1.2.2.2 Designated routes by which building occupants would be directed to in-building relocation areas.
7.1.2.2.3 Procedures for accounting for building occupants after completing in-building relocation.

7.1.2.3 Building Components
7.1.2.3.1 Access to and egress from the building, including entrances, exits and stairwells.
7.1.2.3.2 Elevator operation.
7.1.2.3.3 Ventilation system operation.
7.1.2.3.4 Openable windows.
7.1.2.3.5 Interior doors, including fire doors.
7.1.2.3.6 Electrical, natural gas, steam and other utility operations.
7.1.2.3.7 Fuel oil storage systems and associated pumps and piping.

7.1.3 Partial Evacuation

7.1.3.1 General Procedures.

7.1.3.2 Specific Partial Evacuation Requirements.
7.1.3.2.1 Location of exits, stairwells and elevators.
7.1.3.2.2 Primary and alternate exit routes.
7.1.3.2.3 Assembly areas.
7.1.3.2.4 Procedures of accounting for building occupants after completing a partial evacuation.

7.1.3.3 Building Components.

7.1.3.3.1 Access to and egress from the building, including entrances, exits and stairwells.
7.1.3.3.2 Elevator operation.
7.1.3.3.3 Ventilation system operation.
7.1.3.3.4 Openable windows.
7.1.3.3.5 Interior doors, including fire doors.
7.1.3.3.6 Electrical, natural gas, steam and other utility operations.
7.1.3.3.7 Fuel oil storage systems and associated pumps and piping.

7.1.4 Evacuation

7.1.4.1 General Procedures.

7.1.4.2 Specific Evacuation Requirements
7.1.4.2.1 Location of exits, stairwells and elevators.
7.1.4.2.2 Primary and alternate exit routes.
7.1.4.2.3 Assembly areas.
7.1.4.2.4 Procedures for accounting for building occupants after completing an evacuation.

7.1.4.3 Building Components
7.1.4.3.1 Access to and egress from the building, including entrances, exits and stairwells.
7.1.4.3.2 Elevator operation.
7.1.4.3.3 Ventilation system operation.
7.1.4.3.4 Openable windows.
7.1.4.3.5 Interior doors, including fire doors.
7.1.4.3.6 Electrical, natural gas, steam and other utility operations.
7.1.4.3.7 Fuel oil storage systems and associated pumps and piping.

7.2 Set forth the procedures that will be implemented at times other than regular business hours, if different from those set forth above.

8. Emergency Action Plan Procedures for a Nuclear Incident or Release

Follow the same instructions for nuclear incident or release that are provided in the corresponding section of this plan for explosions (Section 5). Be sure to add any information and detail any changes necessary for planning for a nuclear incident or release.

8.1 General Statement

Set forth below are the procedures that will be implemented during regular business hours in the event of a nuclear incident or release in or proximate to the building, or the threat thereof.

8.1.1 Shelter in Place

8.1.1.1 General Procedures.

8.1.1.2 Building Components or Systems

8.1.1.2.1 Access to and egress from the building, including entrances, exits and stairwells.

8.1.1.2.2 Elevator operation.

8.1.1.2.3 Ventilation system operation.

8.1.1.2.4 Openable windows.

8.1.1.2.5 Interior doors, including fire doors.

8.1.1.2.6 Electrical, natural gas, steam and other utility operations.

8.1.1.2.7 Fuel oil storage systems and associated pumps and piping.

8.1.2 In-Building Relocation

8.1.2.1 General Procedures.

8.1.2.2 Specific In-Building Relocation Requirements

8.1.2.2.1 Designated in-building relocation areas.

8.1.2.2.2 Designated routes by which building occupants would be directed to in-building relocation areas.

8.1.2.2.3 Procedures for accounting for building occupants after completing in-building relocation.

8.1.2.3 Building Components

8.1.2.3.1 Access to and egress from the building, including entrances, exits and stairwells.

8.1.2.3.2 Elevator operation.

8.1.2.3.3 Ventilation system operation.

8.1.2.3.4 Openable windows.

8.1.2.3.5 Interior doors, including fire doors.

8.1.2.3.6 Electrical, natural gas, steam and other utility operations.

8.1.2.3.7 Fuel oil storage systems and associated pumps and piping.

8.1.3 Partial Evacuation

8.1.3.1 General Procedures.

8.1.3.2 Specific Partial Evacuation Requirements

8.1.3.2.1 Location of exits, stairwells and elevators.

8.1.3.2.2 Primary and alternate exit routes.
8.1.3.2.3 Assembly areas.
8.1.3.2.4 Procedures of accounting for building occupants after completing a partial evacuation.

8.1.3.3 Building Components
8.1.3.3.1 Access to and egress from the building, including entrances, exits and stairwells.
8.1.3.3.2 Elevator operation.
8.1.3.3.3 Ventilation system operation.
8.1.3.3.4 Openable windows.
8.1.3.3.5 Interior doors, including fire doors.
8.1.3.3.6 Electrical, natural gas, steam and other utility operations.
8.1.3.3.7 Fuel oil storage systems and associated pumps and piping.

8.1.4 Evacuation

8.1.4.1 General Procedures

8.1.4.2 Specific Evacuation Requirements
8.1.4.2.1 Location of exits, stairwells and elevators.
8.1.4.2.2 Primary and alternate exit routes.
8.1.4.2.3 Assembly areas.
8.1.4.2.4 Procedures for accounting for building occupants after completing an evacuation.

8.1.4.3 Building Components
8.1.4.3.1 Access to and egress from the building, including entrances, exits and stairwells.
8.1.4.3.2 Elevator operation.
8.1.4.3.3 Ventilation system operation.
8.1.4.3.4 Openable windows.
8.1.4.3.5 Interior doors, including fire doors.
8.1.4.3.6 Electrical, natural gas, steam and other utility operations.
8.1.4.3.7 Fuel oil storage systems and associated pumps and piping.

8.2 Set forth the procedures that will be implemented at times other than regular business hours, if different from those set forth above.

9. Emergency Action Plan for a Natural Disaster

Follow the same instructions for a natural disaster that are provided in the corresponding section of this plan for explosions (Section 5). Be sure to add any information and detail any changes necessary for planning for a natural disaster.

9.1 General Statement

Set forth below are the procedures that will be implemented during regular business hours in the event of a natural disaster.

9.1.1 Shelter in Place

9.1.1.1 General Procedures.

9.1.1.2 Building Components or Systems

9.1.1.2.1 Access to and egress from the building, including entrances, exits and stairwells.
9.1.1.2.2 Elevator operation.
9.1.1.2.3 Ventilation system operation.
9.1.1.2.4 Openable windows.
9.1.1.2.5 Interior doors, including fire doors.
9.1.1.2.6 Electrical, natural gas, steam and other utility operations.
9.1.1.2.7 Fuel oil storage systems and associated pumps.

9.1.2 In-Building Relocation

9.1.2.1 General Procedures.

9.1.2.2 Specific In-Building Relocation Requirements

9.1.2.2.1 Designated in-building relocation areas.
9.1.2.2.2 Designated routes by which building occupants would be directed to in-building relocation areas.
9.1.2.2.3 Procedures for accounting for building occupants after completing in-building relocation.

9.1.2.3 Building Components

9.1.2.3.1 Access to and egress from the building, including entrances, exits and stairwells.
9.1.2.3.2 Elevator operation.
9.1.2.3.3 Ventilation system operation.
9.1.2.3.4 Openable windows.
9.1.2.3.5 Interior doors, including fire doors.
9.1.2.3.6 Electrical, natural gas, steam and other utility operations.
9.1.2.3.7 Fuel oil storage systems and associated pumps and piping.

9.1.3 Partial Evacuation

9.1.3.1 General Procedures.

9.1.3.2 Specific Partial Evacuation Requirements

9.1.3.2.1 Location of exits, stairwells and elevators.
9.1.3.2.2 Primary and alternate exit routes.
9.1.3.2.3 Assembly areas.
9.1.3.2.4 Procedures of accounting for building occupants after completing a partial evacuation.

9.1.3.3 Building Components

9.1.3.3.1 Access to and egress from the building, including entrances, exits and stairwells.
9.1.3.3.2 Elevator operation.
9.1.3.3.3 Ventilation system operation.
9.1.3.3.4 Openable windows.
9.1.3.3.5 Interior doors, including fire doors.
9.1.3.3.6 Electrical, natural gas, steam and other utility operations.
9.1.3.3.7 Fuel oil storage systems and associated pumps and piping.

9.1.4 Evacuation

9.1.4.1 General Procedures

9.1.4.2 Specific Evacuation Requirements

9.1.4.2.1 Location of exits, stairwells and elevators.
9.1.4.2.2 Primary and alternate exit routes.
9.1.4.2.3 Assembly areas.
9.1.4.2.4 Procedures for accounting for building occupants after completing an evacuation.

9.1.4.3 Building Components

9.1.4.3.1 Access to and egress from the building, including entrances, exits and stairwells.
9.1.4.3.2 Elevator operation.
9.1.4.3.3 Ventilation system operation.
9.1.4.3.4 Openable windows.
9.1.4.3.5 Interior doors, including fire doors.
9.1.4.3.6 Electrical, natural gas, steam and other utility operations.
9.1.4.3.7 Fuel oil storage systems and associated pumps and piping.

9.2 Set forth the procedures that will be implemented at times other than regular business hours, if different from those set forth above.

10. Emergency Action Plan for Other Emergency

Follow the same instructions for other emergencies that are provided in the corresponding section of this plan for explosions (Section 5). Be sure to add any information and detail any changes necessary for planning for other emergencies. Be sure to identify in Section 10.1 of this plan the type of other emergency, if any, that the plan covers.

10.1 General Statement

Set forth below are the procedures that will be implemented during regular business hours in the event of _____ emergency.
Identify other emergency condition, if any.

10.1.1 Shelter in Place

10.1.1.1 General Procedures

10.1.1.2 Building Components or Systems
- 10.1.1.2.1 Access to and egress from the building, including entrances, exits and stairwells
- 10.1.1.2.2 Elevator operation
- 10.1.1.2.3 Ventilation system operation
- 10.1.1.2.4 Openable windows
- 10.1.1.2.5 Interior doors, including fire doors
- 10.1.1.2.6 Electrical, natural gas, steam and other utility operations
- 10.1.1.2.7 Fuel oil storage systems and associated pumps

10.1.2 In-Building Relocation

10.1.2.1 General Procedures

10.1.2.2 Specific In-building relocation Requirements
- 10.1.2.2.1 Designated in-building relocation areas. Designated routes by which building occupants would be directed to in-building relocation areas
- 10.1.2.2.2 Procedures for accounting for building occupants after completing in-building relocation

10.1.2.3 Building Components
- 10.1.2.3.1 Access to and egress from the building, including entrances, exits and stairwells
- 10.1.2.3.2 Elevator operation
- 10.1.2.3.3 Ventilation system operation
- 10.1.2.3.4 Openable windows
- 10.1.2.3.5 Interior doors, including fire doors

10.1.2.3.6 Electrical, natural gas, steam and other utility operations
10.1.2.3.7 Fuel oil storage systems and associated pumps and piping

10.1.3 Partial Evacuation

10.1.3.1 General Procedures

10.1.3.2 Specific Partial Evacuation Requirements
10.1.3.2.1 Location of exits, stairwells and elevators
10.1.3.2.2 Primary and alternate exit routes
10.1.3.2.3 Assembly areas
10.1.3.2.4 Procedures of accounting for building occupants after completing a partial evacuation

10.1.3.3 Building Components
10.1.3.3.1 Access to and egress from the building, including entrances, exits and stairwells
10.1.3.3.2 Elevator operation
10.1.3.3.3 Ventilation system operation
10.1.3.3.4 Openable windows
10.1.3.3.5 Interior doors, including fire doors
10.1.3.3.6 Electrical, natural gas, steam and other utility operations
10.1.3.3.7 Fuel oil storage systems and associated pumps and piping

10.1.4 Evacuation

10.1.4.1 General Procedures

10.1.4.2 Specific Evacuation Requirements
10.1.4.2.1 Location of exits, stairwells and elevators
10.1.4.2.2 Primary and alternate exit routes
10.1.4.2.3 Assembly areas
10.1.4.2.4 Procedures for accounting for building occupants after completing an evacuation

10.1.4.3 Building Components
10.1.4.3.1 Access to and egress from the building, including entrances, exits and stairwells
10.1.4.3.2 Elevator operation
10.1.4.3.3 Ventilation system operation
10.1.4.3.4 Openable windows.
10.1.4.3.5 Interior doors, including fire doors

10.1.4.3.6 Electrical, natural gas, steam and other utility operations

10.1.4.3.7 Fuel oil storage systems and associated pumps and piping

10.2 Set forth the procedures that will be implemented at times other than regular business hours, if different from those set forth above.

11. Consultation with Neighboring Buildings

R404-02(i) requires that building owners consult with other office buildings (within 200') of their building to notify them of evacuation routes, assembly areas and evacuation drill schedules. This consultation must be documented in written form. Provide a copy of the letter(s) used to consult with neighboring buildings.

11.1 Identify all Neighboring Buildings consulted

11.1.1 Complete address of Neighboring Building

Provide a list of all buildings consulted, including complete building address.

11.1.2 Owner of Neighboring Building

12. Building Maintenance Program

The plan shall indicate the type of system, maintenance required, and personnel responsible for inspecting, testing and otherwise overseeing the maintenance of the fire protection systems and the other equipment and operations affecting building fire safety (mark "N/A" if the building is not provided with such a system).

12.1 Sprinkler and standpipe systems

12.1.1 Maintenance required. Comply with FC901.6 (referencing National Fire Protection Association Standard 25), and 3 RCNY Chapter 9 (including maintenance of sprinkler system pressure tanks, standpipe system pressure reducing devices, and periodic testing of fire department connections). *Include any additional maintenance procedures.*

12.1.2 Responsible personnel

Indicate the name and number of the certificate of fitness holder (if applicable) or other building personnel (by job title). If inspection, testing or other maintenance is to be performed by a contractor, indicate as much in the plan, and identify the contractor in the FSP logbook.

12.2 Fire alarm systems

12.2.1 Maintenance required. Comply with FC901.6 (referencing National Fire Protection Association Standard 72), and 3 RCNY Chapter 9 (including fire alarm recordkeeping and smoke detector maintenance, testing and recordkeeping).

Include any additional maintenance procedures.

12.2.2 Responsible personnel

Indicate the name and number of the certificate of fitness holder (if applicable) or other building personnel (by job title). If inspection, testing or other maintenance is to be performed by a contractor, indicate as much in the plan, and identify the contractor in the FSP logbook.

12.3 Emergency power systems

12.3.1 Maintenance required. Comply with FC 604.3 and 604.4 (referencing National Fire Protection Association Standards 110 and 111).
Include any additional maintenance procedures.

12.3.2 Responsible personnel
Indicate the name and number of the certificate of fitness holder (if applicable) or other building personnel (by job title). If inspection, testing or other maintenance is to be performed by a contractor, indicate as much in the plan, and identify the contractor in the FSP logbook.

12.4 Phase I and Phase II elevator operations

12.4.1 Maintenance required. Comply with FC607.5.
Include any additional maintenance procedures.

12.4.2 Responsible personnel
Indicate the name and number of the certificate of fitness holder (if applicable) or other building personnel (by job title). If inspection, testing or other maintenance is to be performed by a contractor, indicate as much in the plan, and identify the contractor in the FSP logbook.

12.5 Smoke control systems

12.5.1 Maintenance required. Comply with FC909.1.
Include any additional maintenance procedures.

12.5.2 Responsible personnel
Indicate the name and number of the certificate of fitness holder (if applicable) or other building personnel (by job title). If inspection, testing or other maintenance is to be performed by a contractor, indicate as much in the plan, and identify the contractor in the FSP logbook.

12.6 Commercial cooking equipment systems

12.6.1 Maintenance required. Comply with FC904.11.
Include any additional maintenance procedures.

12.6.2 Responsible personnel
Indicate the name and number of the certificate of fitness holder (if applicable) or other building personnel (by job title). If inspection, testing or other maintenance is to be performed by a contractor, indicate as much in the plan, and identify the contractor in the FSP logbook.

12.7 Means of egress

12.7.1 Maintenance required. Comply with FC 1027.3 and 1027.4.

12.7.2 Responsible personnel
Indicate the name and number of the certificate of fitness holder (if applicable) or other building personnel (by job title).

12.8 Hot work operations

12.8.1 Maintenance required. Comply with FC Chapter 26 and R2605-01 (use of a flammable gas and oxygen in citywide hot work operations).
Include any additional maintenance procedures.

12.8.2 Responsible personnel
Indicate the name and number of the certificate of fitness holder (if applicable) or other building personnel (by job title).

12.9 Decorations

12.9.1 Maintenance required. Comply with FC805 and R805-01 (flame-resistant decorations).
Include any additional maintenance procedures.

12.9.2 Responsible personnel
Indicate the name and number of the certificate of fitness holder (if applicable) or other building personnel (by job title).

12.10 Portable fire extinguishers

12.10.1 Maintenance required. Comply with FC906 (referencing National Fire Protection Association Standard 10).
Include any additional maintenance procedures.

12.10.2 Responsible personnel
Indicate the name and number of the certificate of fitness holder (if applicable) or other building personnel (by job title).

12.11 Accumulation of rubbish and combustible waste

12.11.1 Maintenance required. Comply with FC304.
Include any additional maintenance procedures.

12.11.2 Responsible personnel
Indicate the name and number of the certificate of fitness holder (if applicable) or other building personnel (by job title).

13. Floor Plans. Annexed to this plan are floor plans complying with the requirements of R404-01(d)(7).

Evacuation routes shall be shown with the permanent partitions which create the corridors. Corridors, exit access, fire barriers and areas of refuge required to be depicted on such plan shall be defined as set forth in Sections 702 and 1002 of the 2008 Building Code.

14. Sprinkler and Standpipe System Riser Diagram. Annexed to this plan is a single sprinkler and standpipe system riser diagram complying with the requirements of R404-01(d)(7)(C).
Symbols used on the riser diagram shall conform to industry standards, and shall be listed on a legend table indicating their meaning. All floors of the building, including floors below grade, shall be shown on the diagram, except floors that are substantially similar need not be individually shown but may be identified on the riser diagram as typical.

15. Building Information Card. Annexed to this Fire Safety and Evacuation/EAP Plan, as Appendix B-2, is the Building Information Card complying with the requirements of R404-01(n)(1)(A).
The Building Information Card (BIC) must conform to format of Appendix B-2.

16. Building Profile. Annexed to this Fire Safety and Evacuation Plan, as Appendix D, is the Building Profile complying with the requirements of R404-01(n)(1)(B).
The Building Profile must conform to the format of Appendix D. Provide all of the information requested, without reference to other sections of the plan or the Building Information Card, even if the information requested is duplicative.

17. EAP Floor Staffing Charts

    Annexed to this Fire Safety/Emergency Action Plan, as Appendix C-2, is a single (typical and accurate for the building) FS/EAP Staffing Chart complying with the requirements of R404-02(d)(9).

Combined Fire Safety/Emergency Action Plan (Appendix A-2)

Attachment 1

FIRE SAFETY/EAP DIRECTOR

BUILDING ADDRESS: _____

_____

Fire Safety/EAP Director:

Name: _____

FDNY Certificate of Fitness No.: _____

Certificate of Fitness Type: ☐ F25 ☐ F58 ☐ F59

Check the box to indicate the certificate type as identified on the certificate of fitness.

Regular Work Location: _____

Regular Work Hours: _____

Telephone: _____

Cellular Telephone: _____

Fax: _____

E-Mail Address: _____

Other Contact Information: _____

_____

_____ _____

Signature of Owner or Authorized Representative Date

Combined Fire Safety/Emergency Action Plan (Appendix A-2)

Attachment 2

DEPUTY FIRE SAFETY/EAP DIRECTOR

BUILDING ADDRESS: _____

_____

Deputy Fire Safety/EAP Director:

Name: _____

FDNY Certificate of Fitness No.: _____

Certificate of Fitness Type: ☐ F25 ☐ F58 ☐ F59

Check the box to indicate the certificate type as identified on the certificate of fitness.

Regular Work Location: _____

Regular Work Hours: _____

Telephone: _____

Cellular Telephone: _____

Fax: _____

E-Mail Address: _____

Other Contact Information: _____

_____

_____ _____

Signature of Owner or Authorized Representative Date

Complete a separate attachment for each Deputy Fire Safety/EAP Director.

Combined Fire Safety/Emergency Action Plan (Appendix A-2)

Attachment 3

FIRE SAFETY AND EAP BUILDING EVACUATION SUPERVISOR

BUILDING ADDRESS: _____

_____

Building Evacuation Supervisor:

Name: _____

Regular Work Location: _____

Regular Work Hours: _____

Telephone: _____

Cellular Telephone: _____

Fax: _____

E-Mail Address: _____

Other Contact Information: _____

_____

_____ _____

Signature of Owner or Authorized Representative Date

Complete a separate attachment for each Building Evacuation Supervisor. If the Fire Safety Building Evacuation Supervisor and the Emergency Action Plan Building Evacuation Supervisors are different individuals, complete a separate attachment for each, and indicate the plan for which such individual is designated. This attachment need not be completed if Attachment 1 and 2 designate a fire safety director or deputy fire safety director for all times when the building is occupied.

Combined Fire Safety/Emergency Action Plan (Appendix A-2)

Table 1

FIRE SAFETY AND EAP WARDENS

Floor	Assignment Location *(e.g., Warden Phone, Stairwell A)*	Name *(indicate if such individual is designated for FSP, EAP, or both FSP and EAP purposes)*	Regular Days and Hours of work *(e.g., M-F 9-5)*	Work Location Telephone No.	Other Contact Information *(e.g., cell phone number, e-mail address, walkie-talkies)*

There shall be at least one Fire Safety Warden and at least one EAP Warden for each floor during regular business hours identified in Section 2.8.1 of this plan (two such wardens are required for floors >7500 sq ft). If the Fire Safety and EAP Wardens are different individuals, provide the names of all such individuals in the table and indicate the plan for which such individual is designated. Complete for each floor.

_____ _____ _____

Building Address | Signature of Owner or Authorized Representative | Date

Combined Fire Safety/Emergency Action Plan (Appendix A-2)

Table 2

DEPUTY FIRE SAFETY AND EAP WARDENS

Floor	Assignment Location *(e.g., Warden Phone, Stairwell A)*	Name *(indicate if such individual is designated for FSP, EAP, or both FSP and EAP purposes)*	Regular Days and Hours of work *(e.g., M-F 9-5)*	Work Location Telephone No.	Other Contact Information *(e.g., cell phone number, e-mail address, walkie-talkies)*

There shall be at least one Deputy Fire Safety Warden and at least one Deputy EAP Warden for each floor during regular business hours identified in Section 2.8.1 of this plan (two such wardens are required for floors >7500 sq ft). If the Deputy Fire Safety and Deputy EAP Wardens are different individuals, provide the names of all such individuals in the table and indicate the plan for which such individual is designated. .Complete for each floor.

_____ _____ _____

Building Address | Signature of Owner or Authorized Representative | Date

Combined Fire Safety/Emergency Action Plan (Appendix A-2)

Table 2A

FIRE SAFETY AND EAP SEARCHERS

Floor	Assignment Location	Name (*indicate if such individual is designated for FSP, EAP, or both FSP and EAP purposes)*	Regular Days and Hours of work *(e.g., M-F 9-5)*	Work Location Telephone No.	Other Contact Information *(e.g., cell phone number, e-mail address, walkie-talkies)*

There shall be at least one male and one female Fire Safety Searcher and at least one male and one female EAP Searcher for each floor during regular business hours identified in Section 2.8.1 of this plan. If the Fire Safety and EAP Searchers are different individuals, provide the names of all such individuals in the table and indicate the plan for which such individual is designated. Complete for each floor.

_____ _____ _____

Building Address | Signature of Owner or Authorized Representative | Date

Combined Fire Safety/Emergency Action Plan (Appendix A-2)

Table 3

FIRE SAFETY AND EAP BRIGADE MEMBERS

FSP Assignment EAP Assignment *(first list all FSP duties, then list all EAP duties)*	Name *(indicate if such individual's assignment/duties is for FSP or EAP purposes)*	Title *(e.g., building manager, porter, security guard)*	Regular Days and Hours of work *(e.g., M-F 9-5)*	Work Location Telephone No.	Other Contact Information *(e.g., cell phone number, e-mail address, walkie-talkies)*

Fire Safety Brigade members and EAP Brigade members must be indicated for all regular business hours identified in Section 2.8.1 of this plan. The Building Manager, Director of Security and Chief Engineer or their designated representatives must be included as EAP Brigade members. The Fire Safety Director and Deputy Fire Safety Directors cannot be members of the Fire Safety Brigade or EAP Brigade. Any assignments stated elsewhere in the EAP for brigade members, including Appendix A-2, Table 7, shall also be listed in this table. In column 3 indicate if such individual is designated for FSP, EAP, or both FSP and EAP purposes.

_____ _____ _____

Building Address | Signature of Owner or Authorized Representative | Date

Combined Fire Safety/Emergency Action Plan (Appendix A-2)

Table 4

BUILDING PERSONNEL CRITICAL OPERATIONS STAFF FOR EAP

Name	Title *(e.g. porter, security guard)*	Employer	EAP Critical Operation	Regular Days and Hours of work *(e.g. M-F 9-5)*	Regular Work Location	Work Location Telephone No.	Other Contact Information *(e.g. cell phone number, e-mail address, walkie-talkies)*

EAP Critical Operation assignments should match with those listed in Appendix A-2, Table 7.

_____ _____ _____

Building Address | Signature of Owner or Authorized Representative | Date

Combined Fire Safety/Emergency Action Plan (Appendix A-2)

Table 5

OFFICE EMPLOYEES CRITICAL OPERATIONS STAFF FOR EAP

Name	Title *(e.g. security guard, medical attendant)*	Employer	EAP Critical Operation	Regular Days and Hours of work *(e.g. M-F 9-5)*	Regular Work Location	Work Location Telephone No.	Other Contact Information *(e.g. cell phone number, e-mail address, walkie-talkies)*

Critical Operations Staff (Office Employees) are not EAP staff members and have no responsibilities with respect to implementing the EAP. They should be included in the EAP and exempted from participation in EAP drills and/or delayed in participating in the implementation of the EAP only if the employer can demonstrate that the employee is performing a public safety function or essential service for the employer in which there is a compelling public interest in maintaining even in the event of an emergency. (See R404-02(d)(2)(G)). The basis for designating an office employee as Critical Operations Staff must be documented in writing and made available for inspection by Department representatives, upon request.

_____ _____ _____

Building Address | Signature of Owner or Authorized Representative | Date

Combined Fire Safety/Emergency Action Plan (Appendix A-2)

Table 6

NUMBER OF BUILDING OCCUPANTS

Floor	# Occupants	Floor	# Occupants	Floor	# Occupants

Provide information for all floors, including those that are below grade, those having no building occupants, and those that are not included in the plan such as residentially occupied floors. In addition to regular building occupants, include the average number of visitors present on each floor on a typical work day. The occupant load specified in this table should match the information specified in Appendix A-2, Table 8.

Total # of Occupants: _____

_____ Building Address

_____ Signature of Owner or Authorized Representative

_____ Date

Combined Fire Safety/Emergency Action Plan (Appendix A-2)

Table 7

DESIGNATED FUNCTIONS FOR EAP

In the event of an emergency, indicate what actions may be taken with regard to specific building components, and the EAP staff member identified by title, who will be responsible to take such actions and communicate their findings back to the Fire Safety/EAP Director. If procedures for one type of emergency are identical (in whole or in part) to those for another emergency, a statement to that effect is sufficient and the information need not be repeated. Also, provide such information in item 1 below. Use additional sheets as necessary. Sufficient personnel should be listed in this table to provide the necessary assessments and actions during all regular business hours identified in Section 2.8.1 of this plan. The Fire Safety/EAP personnel listed in this table should be identified (by title and assignment) exactly as they were identified in Appendix A-2, Tables 3 and 4.

1. Type of emergency ☐Explosion ☐Biological ☐Chemical ☐Nuclear ☐Natural Disaster ☐Other Emergency _____ *(check type(s) of emergency)*

2. Access to and egress from entrances/exits and stairwells:

Building entrances/exits

Location/designation	Title of EAP staff member

Stairwells

Letter designation	Title of EAP staff member

Include a complete list of exits and stairwells. Indicate, by title, the EAP personnel responsible for assessments and necessary actions. The title provided in these tables will be cross-referenced to titles that are listed on Appendix A-2, Table 3 or 4, where the names of the personnel must be listed. This stairwell and exit information will be cross-checked for completeness with the information on floor plans and the Building Information Card.

3. Elevator operations:

Elevator bank and car numbers *(i.e. Bank A, cars 1 through 6)*	Title of EAP staff member

List all elevator banks and car numbers. Indicate, by title, the EAP staff member responsible for assessments and necessary actions. The elevator information provided in this table must be consistent with the information on floor plans and the Building Information Card.

4. Fuel oil storage systems and associated pumps and piping, and electrical, natural gas, steam and other utility operations:

	Title of EAP staff member
Fuel oil	
Electrical	
Natural gas	
Steam	
Other utility	

List all fuel oil storage systems and associated pumps and piping, and electrical, natural gas, steam and other utilities. Indicate, by title, the EAP staff member responsible for assessments and necessary actions. The utility information provided in this table must be consistent with the information on floor plans and the Building Information Card.

5. Ventilation system operations:

Zone # _____	Title of EAP staff member
HVAC equipment	
Smoke management systems	

List all heating, ventilation and air conditioning equipment and smoke management systems. Indicate, by title, the EAP staff member responsible for assessments and necessary actions. The ventilation information provided in this table must be consistent with the information on floor plans and the Building Information Card.

6. Communication:

	EAP staff	Building occupants	Critical operations staff
Primary			
Secondary			
Additional			
Additional			

List the primary and alternate means available for communicating within the building to EAP staff, building occupants and critical operations staff. Examples of communicating means may include, but are not limited to class B voice communication system, PA system, two-way radios and cellular telephones.

Combined Fire Safety/Emergency Action Plan (Appendix A-2)

Table 8

IN-BUILDING RELOCATION AREAS FOR EAP

Location *(e.g. 2nd Floor conference room)*	Protection *(check appropriate boxes)*	Max occupant capacity *(estimated)*	Essentials *(check appropriate boxes)*
	Windowless Y☐ N☐ Doors Y☐ N☐ Other		Water Y☐ N☐ Equipment Y☐ N☐ Lavatories Y☐ N☐ Supplies Y☐ N☐
	Windowless Y☐ N☐ Doors Y☐ N☐ Other		Water Y☐ N☐ Equipment Y☐ N☐ Lavatories Y☐ N☐ Supplies Y☐ N☐
	Windowless Y☐ N☐ Doors Y☐ N☐ Other		Water Y☐ N☐ Equipment Y☐ N☐ Lavatories Y☐ N☐ Supplies Y☐ N☐
	Windowless Y☐ N☐ Doors Y☐ N☐ Other		Water Y☐ N☐ Equipment Y☐ N☐ Lavatories Y☐ N☐ Supplies Y☐ N☐
	Windowless Y☐ N☐ Doors Y☐ N☐ Other		Water Y☐ N☐ Equipment Y☐ N☐ Lavatories Y☐ N☐ Supplies Y☐ N☐

Complete this table only for EAP in-building relocation areas (IBRA). Provide a floor by floor listing of the required pre-designated IBRA. List all floors, including those that are below grade. Those floors having no occupants, such as MER floors, and floors that are not part of the EAP, such as residentially occupied floors, shall be noted in the table for that floor number. Information provided in this table will be cross-referenced with building occupant information provided in Appendix A-2, Table 6. Every floor having building occupants listed on Appendix A-2, Table 6 must have a pre-designated IBRA indicated in this table that has a sufficient occupant capacity to accommodate the number of building occupants assigned to such IBRA. If building occupants are to be assigned to an IBRA on a floor other than their normal work floor, the route to that IBRA must be designated in the location portion of the table (e.g. 3rd floor occupants will use the IBRA on the 2nd floor, accessed via stairwell B). Stairwells, including enclosed, open and access stairwells, are not acceptable as an IBRA.

Building Address	Signature of Owner or Authorized Representative	Date

Combined Fire Safety/ Emergency Action Plan (Appendix A-2)

Table 8A

IN-BUILDING RELOCATION AREAS FOR FSP

Location of IBRA *(i.e. 2nd Floor conference room)*	Floor(s) relocating to this IBRA	Max IBRA occupant capacity *(estimated)*

Complete this table only for FSP in-building relocation areas (IBRA). Provide a floor by floor listing of the pre-designated IBRA corresponding to Appendix A-2, Table 8B information. An IBRA must have an occupant capacity sufficient to accommodate the number of building occupants assigned to such IBRA. Generally, this will include three floors of building occupants; those relocated from the fire floor, the floor above the fire and the floor below the fire, to an IBRA two floors below the fire.

_____ _____ _____

Building Address Signature of Owner or Authorized Representative Date

Combined Fire Safety/Emergency Action Plan (Appendix A-2)

Table 8B

IN-BUILDING RELOCATION AREA ROUTES FOR FSP

	Floor No.	Routes to in-building relocation areas *(e.g. 6th floor occupants will use the IBRA on the 4th floor, accessed via corridors to stairwell B)*	Stairwell route terminus*(e.g. stairwell B to 1st floor 42nd Street exit)*
Primary			
Alternate			
Primary			
Alternate			
Primary			
Alternate			
Primary			
Alternate			

Complete this table only for FSP in-building relocation area (IBRA) evacuation routes. All floors must be listed, including below grade floors. Floors that have no building occupants, such as MER floors, or floors that are not part of the FSP, such as residentially occupied floors shall be noted in the table for that floor number. Information provided in this table will be cross-referenced with building occupant information provided in Appendix A-2, Table 6. For each occupied floor, there must be a primary and an alternate route to an in-building relocation area. The alternate route must utilize a different stairwell than the primary route. An alternate IBRA need not be provided. Any IBRA identified in this table must also be identified in Appendix A-2, Table 8A.

_____ _____ _____

Building Address | Signature of Owner or Authorized Representative | Date

Combined Fire Safety/Emergency Action Plan (Appendix A-2)

Table 9

SPECIFIC EVACUATION ROUTES FOR EAP

	Floor No.	Exit Routes *(e.g. hallways)*	Stairwell Letter/ Terminus	Elevator Bank /Terminus
Primary				
Alternate				
Primary				
Alternate				
Primary				
Alternate				
Primary				
Alternate				

Complete this table only for EAP full building evacuation routes. This table is used to provide a floor by floor listing of the required primary and alternate EAP evacuation routes. All floors must be listed, including below grade floors. Floors that have no building occupants, such as MER floors, or floors that are not part of the EAP, such as residentially occupied floors shall be noted in the table for that floor number. A primary and alternate stairwell should be provided for each floor. If elevators are listed as an alternate evacuation route the EAP staff members responsible for such operation must be identified in Appendix A-2, Table 3 or 4 with that elevator operation assignment listed. In column 3 list the stairwell letter and the location that that stairwell terminates to provide egress from the building. List the same information for the alternate stairwell. In column 4 list the elevator bank letter and the location that that bank terminates to provide egress from the building. List the same information for the alternate elevator.

_____ _____ _____

Building Address | Signature of Owner or Authorized Representative | Date

Combined Fire Safety/Emergency Action Plan (Appendix A-2)

Table 10

ASSEMBLY AREAS FOR EAP

Provide the required information for each assembly area separately. Assembly areas must be:

- *at a safe distance from the building (preferably a distance from the building not less than the height of the building);*
- *sufficient in number and size to accommodate the building occupants that will be assigned to report to such assembly area; and*
- *allow for the continuous movement of building occupants away from the building to their assembly areas;*

Assembly area #_____.

Location-_____

If the assembly area is a building provide address. If outdoors, specify the exact location. An insufficiently specific location, such as "Central Park," or a location that is inadequate to safely accommodate building occupant, such as a street corner, will not be accepted as an assembly area.

Distance from building to assembly area *(feet)*-_____

Maximum number of persons that assembly area accommodates_____

Employer(s) _____

_____

_____

Employer(s) procedures to account for building occupants, and how such information will be communicated back to the fire command center. *(Include the titles of those responsible to account for employees after being evacuated.)*

_____

_____

Assembly area #_____.

If more than one assembly area is designated provide such information in the same format as above.

_____	_____	_____
Building Address	Signature of Owner or Authorized Representative	Date

APPENDIX A-3

FIRE SAFETY AND EVACUATION PLAN FORMAT

OFFICE BUILDINGS WITH INTERIOR FIRE ALARM SYSTEMS

The Fire Safety and Evacuation Plan required by New York City Fire Code (FC) Section FC404.2.1 and Fire Department rule (R) 3 RCNY 404-01 shall include the text of and conform in all respects to this format. Instructions, shown in italics, should not be included in the plan.

The Fire Safety and Evacuation Plan may make reference at any point to additional accompanying attachments, tables and/or other supporting information or documentation, including the attachments and tables prescribed by the format for various Fire Safety and Evacuation Plan information.

A copy of the Fire Safety and Evacuation Plan and floor plans shall be kept at the fire command center (commonly referred to as the fire command station).

Questions regarding the format and submission of the Fire Safety and Evacuation Plan may be directed to the Emergency Planning and Preparedness Unit of the Bureau of Fire Prevention at Fire Department Headquarters.

1. Owner's Certification

   I hereby certify that this Fire Safety and Evacuation Plan is in compliance with the requirements of FC404.2.1 and R404-01. This Fire Safety and Evacuation Plan sets forth the circumstances and procedures for the evacuation of building occupants in response to a fire.

   _____ _____

   Owner's signature Date

"Owner" is defined in R404-01(b) as "the fee owner or lessee of the building, or other person or entity having charge thereof."

2. Building Information

   2.1 Complete building address

   2.2 Building owner information

      2.2.1 Name
      2.2.2 Mailing address
      2.2.3 Building Identification Number
      2.2.4 Telephone number(s)
      2.2.5 Cellular telephone number(s)
      2.2.6 Fax number(s)

2.2.7 E-mail address

2.3 Height of building, and number of stories above and below grade.

2.4 Lawful use and occupancy
Attach a copy of current Certificate of Occupancy for the building.

2.5 Signage

2.5.1 Elevator lobbies. Floor number signs, elevator bank designation signs, and floor diagram signs (showing the route of egress) have been provided at elevator lobbies in compliance with the requirements of the New York City Building Code.

2.5.2 Stairwells. Stairwell identification signs have been posted on the corridor sides of stairwell doors and floor number signs have been posted on the stairwell side of stairwell doors in compliance with the requirements of the New York City Building Code.

3. Fire Safety Staff Designations, Duties and Responsibilities

3.1 Fire drill conductor. Indicate that a person holding a certificate of fitness as fire drill conductor will conduct fire drills as required by FC405.2, and that such drills consistent with and reinforced the fire safety and evacuation instructions listed in Section 4 of this plan.
Indicate the name, contact information and certificate of fitness number of the building personnel or contractor that will conduct fire drills, and enter this information in the FSP logbook.

4. Fire Safety and Evacuation Instructions

4.1 Evacuation of Building in the Event of Fire

4.1.1 Any person discovering fire, smoke or other fire condition should without delay cause the transmission of a fire alarm by calling 911 or activating a fire alarm box.

4.1.2 Upon activation of the building's fire alarm system, all building occupants shall immediately evacuate of the building in accordance with this plan, if able to do so safely.
Indicate in Appendix A-3, Table 1, the evacuation route by which building occupants will be evacuated from the building.

4.1.3 The following factors shall be expeditiously determined and considered in whether and how to safely evacuate the building in the event of a fire in the building:

4.1.3.1 Location of the fire (floors and areas on floors).

4.1.3.2 Severity of the fire.

4.1.3.3 Floors affected by smoke conditions.

4.1.3.4 Stairwells affected by smoke conditions.

4.2 Use of Elevators. Elevators shall not be used to implement the fire safety and evacuation plan, except when authorized by firefighting personnel.

4.3 Procedures for identifying building occupants who require assistance, and the procedures for providing such assistance.
Include in statement that a list of such occupants shall be prepared and indicate the location on the premises at which it will be maintained. Elevator(s) shall not be designated as a procedure for movement of such building occupants.

5. Building Maintenance Program
The fire safety and evacuation plan shall indicate the type of system, maintenance required, and personnel responsible for inspecting, testing and otherwise overseeing the maintenance of the following fire protection systems and the other equipment and operations affecting building fire safety (mark "N/A" if the building is not provided with such a system):

5.1 Sprinkler and standpipe systems

5.1.1 Maintenance required. Comply with FC901.6 (referencing National Fire Protection Association Standard 25), and 3 RCNY Chapter 9 (including maintenance of sprinkler system pressure tanks, standpipe system pressure reducing devices, and periodic testing of fire department connections).
Include any additional maintenance procedures.

5.1.2 Responsible personnel
Indicate the name and number of the certificate of fitness holder (if applicable) or other building personnel (by job title). If inspection, testing or other maintenance is to be performed by a contractor, indicate as much in the plan, and identify the contractor in the FSP logbook.

5.2 Fire alarm systems

5.2.1 Maintenance required. Comply with FC901.6 (referencing National Fire Protection Association Standard 72), and 3 RCNY Chapter 9 (including fire alarm recordkeeping and smoke detector maintenance, testing and recordkeeping).
Include any additional maintenance procedures.

5.2.2 Responsible personnel
Indicate the name and number of the certificate of fitness holder (if applicable) or other building personnel (by job title). If inspection, testing or other maintenance is to be

performed by a contractor, indicate as much in the plan, and identify the contractor in the FSP logbook.

5.3 Emergency power systems

5.3.1 Maintenance required. Comply with FC 604.3 and 604.4 (referencing National Fire Protection Association Standards 110 and 111).
Include any additional maintenance procedures.

5.3.2 Responsible personnel
Indicate the name and number of the certificate of fitness holder (if applicable) or other building personnel (by job title). If inspection, testing or other maintenance is to be performed by a contractor, indicate as much in the plan, and identify the contractor in the FSP logbook.

5.4 Phase I and Phase II elevator operations

5.4.1 Maintenance required. Comply with FC607.5.
Include any additional maintenance procedures.

5.4.2 Responsible personnel
Indicate the name and number of the certificate of fitness holder (if applicable) or other building personnel (by job title). If inspection, testing or other maintenance is to be performed by a contractor, indicate as much in the plan, and identify the contractor in the FSP logbook.

5.5 Smoke control systems

5.5.1 Maintenance required. Comply with FC909.1.
Include any additional maintenance procedures.

5.5.2 Responsible personnel
Indicate the name and number of the certificate of fitness holder (if applicable) or other building personnel (by job title). If inspection, testing or other maintenance is to be performed by a contractor, indicate as much in the plan, and identify the contractor in the FSP logbook.

5.6 Commercial cooking equipment systems

5.6.1 Maintenance required. Comply with FC904.11.
Include any additional maintenance procedures.

5.6.2 Responsible personnel
Indicate the name and number of the certificate of fitness holder (if applicable) or other building personnel (by job title). If inspection, testing or other maintenance is to be performed by a contractor, indicate as much in the plan, and identify the contractor in the FSP logbook.

5.7 Means of egress

5.7.1 Maintenance required. Comply with FC 1027.3 and 1027.4.

5.7.2 Responsible personnel
Indicate the name and number of the certificate of fitness holder (if applicable) or other building personnel (by job title).

5.8 Hot work operations

5.8.1 Maintenance required. Comply with FC Chapter 26 and R2605-01 (use of a flammable gas in citywide hot work operations).
Include any additional maintenance procedures.

5.8.2 Responsible personnel
Indicate the name and number of the certificate of fitness holder (if applicable) or other building personnel (by job title).

5.9 Decorations

5.9.1 Maintenance required. Comply with FC805 and R805-01 (flame-resistant decorations).
Include any additional maintenance procedures.

5.9.2 Responsible personnel
Indicate the name and number of the certificate of fitness holder (if applicable) or other building personnel (by job title).

5.10 Portable fire extinguishers

5.10.1 Maintenance required. Comply with FC906 (referencing National Fire Protection Association Standard 10).
Include any additional maintenance procedures.

5.10.2 Responsible personnel
Indicate the name and number of the certificate of fitness holder (if applicable) or other building personnel (by job title).

5.11 Accumulation of rubbish and combustible waste

5.11.1 Maintenance required. Comply with FC304.
Include any additional maintenance procedures.

5.11.2 Responsible personnel
Indicate the name and number of the certificate of fitness holder (if applicable) or other building personnel (by job title).

6. Floor Plans. Annexed to this plan are floor plans complying with the requirements of R404-01(d)(7).

Evacuation routes are required to be depicted on such plans and shall be shown with the permanent partitions which create the corridors. Corridors, exit access, fire barriers and areas of refuge required to be depicted on such plans shall be defined as set forth in Sections 702 and 1002 of the 2008 Building Code.

7. Sprinkler and Standpipe System Riser Diagram. Annexed to this Fire Safety and Evacuation Plan is a single sprinkler and standpipe system riser diagram complying with the requirements of R404-01(d)(7)(C).
Symbols used on the riser diagram shall conform to industry standards, and shall be listed on a legend table indicating their meaning. All floors of the building, including floors below grade, shall be shown on the diagram, except floors that are substantially similar need not be individually shown but may be identified on the riser diagram as typical.

8. Building Profile. Annexed to this Fire Safety and Evacuation Plan, as Appendix D, is the Building Profile complying with the requirements of R404-01(o)(1).
The Building Profile must conform to the format of Appendix D. Provide all of the information requested, without reference to other sections of the plan, even if the information requested is duplicative.

Fire Safety and Evacuation Plan (Appendix A-3)
Office Buildings With Interior Fire Alarm Systems

Table 1

EVACUATION ROUTES

	Floor No.	Evacuation route and exit discharge location*(e.g. stairwell A to 1st floor 42nd Street exit)*
Primary		
Alternate		
Primary		
Alternate		
Primary		
Alternate		
Primary		
Alternate		

Use this table to provide a floor by floor listing of the required primary and alternate evacuation routes. All floors must be listed, including below grade floors. Floors that have no building occupants, such as MER floors, or floors that are not part of the FSP, such as residentially occupied floors shall be noted in the table for that floor number. A primary and alternate stairwell must be provided for each floor. In column 2 list the stairwell letter and the location that that stairwell terminates to provide egress from the building. List the same information for the alternate stairwell.

_____	_____	_____
Building Address	Signature of Owner or Authorized Representative	Date

FIRE SAFETY AND EVACUATION PLAN APPENDIX B-1

HOTEL/MOTEL BUILDING INFORMATION CARD

(For use by Fire Department personnel)

1. BUILDING INFORMATION: BIN#_____

Address:

A/K/A:

Construction Class:

Hotel Floors:

Office Floors:

2. BUILDING STATISTICS:

Stories: Height: Width:

Type of Construction:

Truss Construction: Roof: Yes / No

Floors: Yes / No If yes, what floors:

Horizontal Connections: Passageway / Utility Pipe Chase

3. STAIRWELLS:

Designation Floors Served Pressurized Standpipe

Re-entry floors: _____

4. ELEVATORS:

Bank Designation Car Numbers Floors Served

5. VENTILATION:

HVAC Zones: _____

Bldg. Management System (BMS): Yes / No

Location: On-site /

Off-site emergency number:

Smoke Management System /

6. UTILITIES:

All Fuel Oil Tank Locations (Capacity): _____ (___ gal); _____ (___ gal); _____ (___gal); _____ (___gal)

Natural Gas Service: Yes / No Shutoff location:_____

7. FIRE PROTECTION SYTEMS:

Standpipe Locations: _____

Standpipe Isolation Valve Locations: _____

FD Connection Locations: _____

Building Fully Sprinkled: Yes / No

Partially Sprinkled: Floors: ___ ___ ___ ___ ___

8. HAZARDOUS MATERIALS:

NAME OF PRODUCT/QUANTITY	LOCATION
_____	_____
_____	_____
_____	_____
_____	_____
_____	_____

9. COMMUNICATIONS:

Number of Radios for FDNY Use: _____

24 hr Location:

10. TEMPORARY CONSIDERATIONS

11. BUILDING FIRE SAFETY INFORMATION:

Fire Safety Director: _____

Work: ( )-_____-_____

Emergency: ( )-_____-_____

Building Engineer: _____

Work: ( )-_____-_____

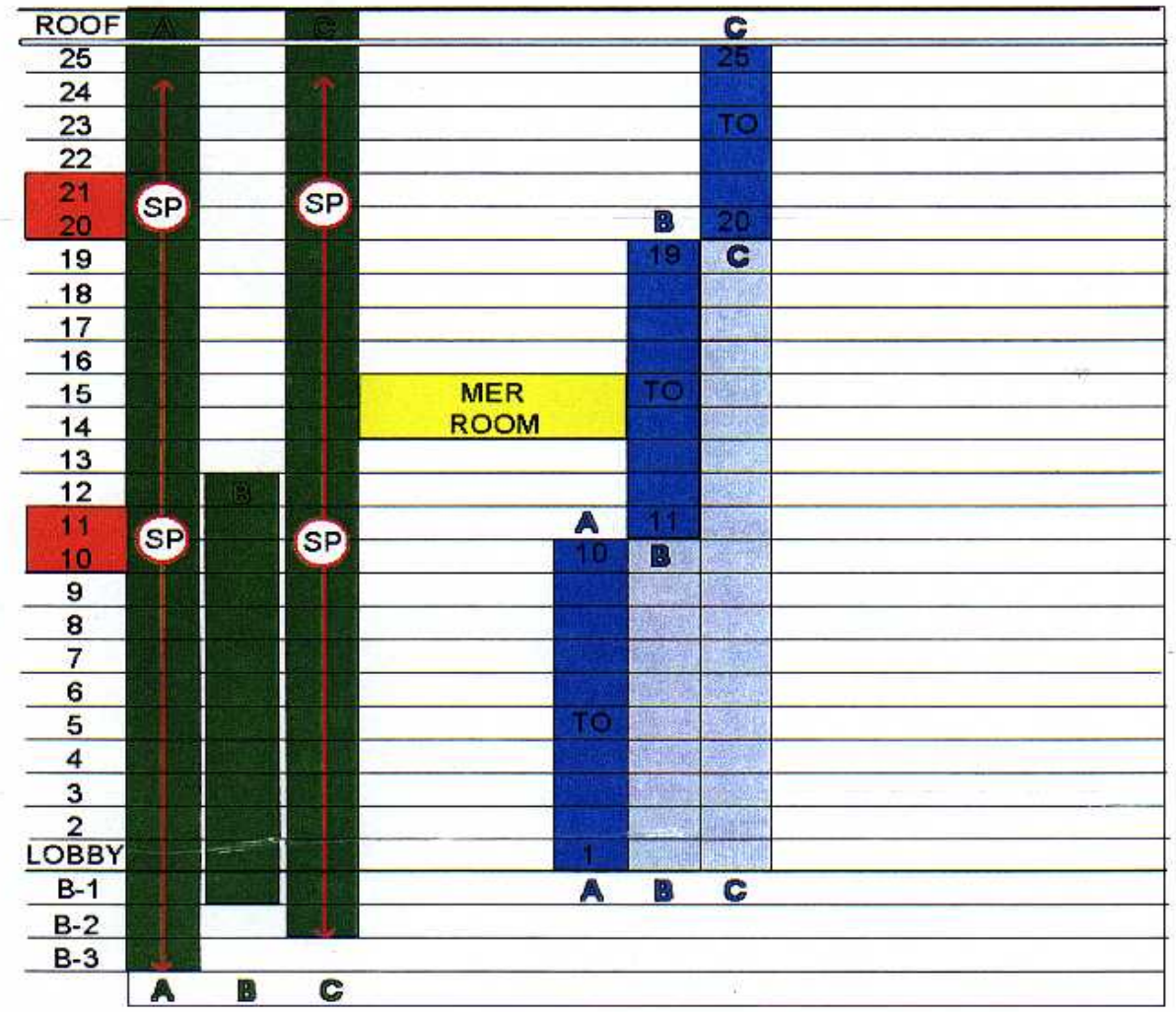
ROOF
25
24
23
22
21
20
19
18
17
16
15
14
13
12
11
10
9
8
7
6
5
4
3
2
LOBBY
B-1
B-2
B-3
SP
MER ROOM
TO
A
B
C

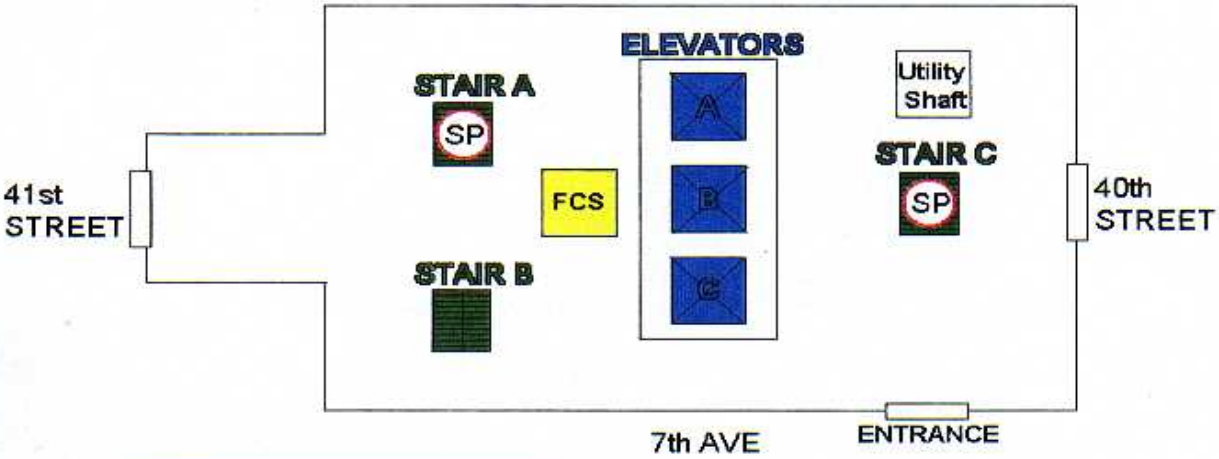
ELEVATORS
STAIR A
SP
FCS
STAIR B
Utility Shaft
STAIR C
41st STREET
40th STREET
7th AVE
ENTRANCE

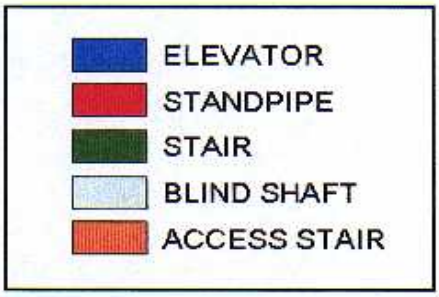
ELEVATOR
STANDPIPE
STAIR
BLIND SHAFT
ACCESS STAIR

Fire Safety and Evacuation Plan (Appendix B-1)
Hotel/Motel Occupancies
Building Information Card

Instructions

A Building Information Card (BIC), in the format set forth as Appendix B-1, must be maintained at the fire command center, and made available to Fire Department representatives or emergency response personnel, upon request. The Building Information Card must be 11" x 17" in size, double sided. The BIC required to be maintained at the fire command center must be laminated; the one submitted for FSP plan approval does not.

Page 1 of the BIC requires detailed building information, including information regarding elevators, stairwells, water supply and utilities, fire extinguishing systems and ventilation systems.

Page 2 of the BIC requires a color-coded plot plan and elevation of the building that details bordering streets, entrances, floors, stairs, elevators, shafts, standpipes, and mechanical equipment room locations.

Page 1 (Written Information)

Page 1 of the Building Information Card requires written information about the building. Complete all sections of the form. No parts should be left blank; if any part does not apply, enter N/A.

Box 1 BUILDING INFORMATION

ADDRESS: Provide complete address (e.g. 9 MetroTech Center)
A/K/A: Provide any other street addresses (e.g. 144 Tech Place)
CONSTRUCTION CLASS/TYPE: For buildings constructed under the 1968 NYC Building Code or prior code provide the1968 Building Code construction classification (see reference 1 below). For buildings constructed under the 2008 Building Code provide the 2008 Building Code construction type as set forth in Building Code Section 602. Indicate the code used when completing the card (e.g. I-A (1968 Code) or II-A (2008 Code)).
HOTEL FLOORS: List all floors designated for Occupancy Group R-1 (hotel/motel) use (e.g., Flr 1-12)
OFFICE FLOORS: List all floors designated for Occupancy Group B office use (e.g. Flr 13-25).
OTHER RESIDENTIAL FLOORS: List all floors designated for Occupancy Group R-2 (apartment) use (e.g. Flr 26-39).
RETAIL FLOORS: List all floors with retail occupancy space.
PUBLIC ASSEMBLY AREAS: List all floors having public assembly areas. (e.g. Flr 1 theater; Flr 20 restaurant).
BUILDING POPULATION: DAY/NIGHT/WEEKEND: List the number of building employees and visitors in the building during the day, night and weekend. These numbers should coincide with information contained in Appendix A-1, Table 2.

Box 2 BUILDING STATISTICS

STORIES: List number of floors above and below grade.
HEIGHT: Provide building height in feet.
WIDTH: Provide building frontage width in feet.
TYPE OF CONSRUCTION: List the predominate type of building material used in the construction of the building. (e.g. concrete and steel, concrete).
TRUSS CONSTRUCTION: ROOF / FLOORS: Circle "Yes" if roof is of truss construction; Circle "No" if it is not. Also, list all floors having any form of truss construction.

HORIZONTAL CONNECTIONS: List the location and type of any horizontal connection to an adjacent building (e.g. passage ways, utility pipe chase, cellars, etc.).

ROOF SETBACK LEVELS: A set back is an "area formed when the floor area of the building is reduced thus requiring the exterior wall of a building to be recessed." List all floor numbers having setbacks.

Box 3 STAIRWELLS

DESIGNATION: List the letter designations of all stairwells.
FLOORS SERVED: List the range of floors served for each stairwell.
PRESSURIZED: List any stairwell provided with stairwell pressurization.
STANDPIPES: List the stairwells that contain standpipe hose connections.
RE-ENTRY FLOORS: List all stairwell re-entry floors.
ACCESS/CONVENIENCE STAIRS: List the floors served. (e.g. Flr 2-3, 5-7). Include escalators.
ROOF ACCESS: List stairwells that have access to roof.
FIRE TOWER: List any stairwells that are fire towers.

Box 4 ELEVATORS

BANK: List the letter designations for all elevator banks.
CAR NUMBERS: List the individual elevator car numbers in each bank.
FLOORS SERVED: List floors served by each elevator.
FREIGHT ELEVATOR BANK: List bank and car numbers of freight elevators.

SKY LOBBY: A sky lobby is an elevator bank whose lowest terminal level is on an upper floor. Not all buildings have sky lobbies. If a sky lobby is provided, list each floor on which a sky lobby is located.

Box 5 VENTILATION

HVAC ZONES: List the zones or floors the HVAC system supplies. Several zones, such as "Flrs 1-10, 11-20, 20-35", or individual "package units" for each floor are examples.
BUILDING MANAGEMENT SYSTEM: If there is a building management system provide its location.
OFF-SITE EMERGENCY NUMBER: Provide telephone number.
SMOKE MANAGEMENT SYSTEM/PURGE CAPABILITY: Indicate Yes or No / Auto or Manual
LOCATION OF MECHANICAL ROOMS: Provide location(s).

Box 6 UTILITIES

ALL FUEL OIL TANK LOCATIONS: List the capacity and location of each tank.
NATURAL GAS SERVICE: Provide location of gas shutoff valve.
EMERGENCY GENERATOR LOCATION: Provide location of each emergency generator.
ROOF STORAGE: LPG/DIESEL/OTHER: Check appropriate box. If other, indicate type of fuel.

Box 7 FIRE PROTECTION SYSTEMS

STANDPIPE LOCATIONS: Provide locations of standpipes. Standpipes in stairwells should be depicted in the diagram on Page 2. If other than in a stairwell, give exact locations (e.g. across from "B" bank elevators; east side of building; etc.)

STANDPIPE ISOLATION VALVE LOCATIONS: Provide valve locations and floor (e.g. Flr 19 utility closet, Flr 10 "B" stairwell).

FD CONNECTION LOCATION: Provide location(s) of FD connection(s) on exterior of building. Indicate which street side and the number of connections found on that side. (e.g. (2) Sixth Ave side; (1) 37th St side).

BUILDING FULLY SPRINKLED: Indicate Yes or No

PARTIALLY SPRINKLED FLOORS: In a building that is not completely sprinklered, list any floors that are sprinkled.
PRV VALVE FLOOR LOCATIONS: Indicate location of pressure reducing valves.
FIRE PUMP LOCATIONS: List the floor(s) on which the fire pumps are installed.
NON-WATER FIRE EXTINGUISHING SYSTEMS: List type of system and location (e.g. Flr 1 restaurant wet chemical system; Flr 10 electrical closet carbon dioxide system)

Box 8 HAZARDOUS MATERIALS

NAME OF PRODUCT/QUANTITY: Provide information. If none, mark N/A.
LOCATION: Provide information. If none, mark N/A.

- *Any storage location within the building that contains less than 5 gallons of flammable liquid, 25 gallons of combustible liquid or 55 gallons of corrosive material may be excluded.*
- *In addition to the name of product for each hazardous material, indicate its United States Department of Transportation classification.*
- *Hazardous material storage locations within the building identified elsewhere on the Building Information Card, such as fuel oil storage, are not required to be listed in this box.*
- *Identify areas/rooms of special concern (such as medical facility (x-ray); U.P.S./battery rooms; transformer locations; cellular antennas, etc.) as special notes.*

Box 9 COMMUNICATIONS

NUMBER OF RADIOS FOR FDNY USE: Indicate the number of building radios available for emergency responder use, if any. If none, mark N/A.
24 HOUR LOCATION: Indicate location and availability of radios (e.g. fire command center 24/7, fire command center 8am to 4pm). If none, mark N/A.
COMMUNICATIONS FOR FDNY USE: Indicate any other means of communication available for emergency responder use (e.g. repeaters). If none, mark N/A.

Box 10 TEMPORARY CONSIDERATIONS

Fill in with erasable markings. This section is provided to allow the Building Information Card to be kept current to reflect such conditions as construction projects in progress, or out-of-service fire protection or life safety systems.

Box 11- BUILDING FIRE SAFETY INFORMATION

Provide the name and contact information (work and emergency telephone numbers) for the fire safety director, building engineer and hotel/motel manager.

REFERENCE # 1 (BOX 1)

1968 NYC Building Code Construction Classifications

Construction Group	Class
I - Noncombustible	I - A - (4-hr. protected)
	I - B - (3-hr. protected)
	I - C - (2-hr. protected)
	I - D - (1-hr. protected)
	I - E - (unprotected)
II - Combustible	II - A - (heavy timber)

II - B - (protected wood joist)
II - C - (unprotected wood joist)
II - D - (protected wood frame)
II - E - (unprotected wood frame)

Buildings or spaces of noncombustible construction (construction group I) are those in which the walls, exit ways, shafts, structural members, floors, and roofs are constructed of noncombustible materials and assemblies affording fire-resistance ratings. The noncombustible construction group I is broken down into five different classes, I-A, I-B, I-C, I-D and I-E as follows:

Construction class I-A. Includes buildings and spaces in which the bearing walls and other major structural elements are generally of four-hour fire-resistance rating.

Construction class I-B. Includes buildings and spaces in which the bearing walls and other major structural elements are generally of three-hour fire-resistance rating.

Construction class I-C. Includes buildings and spaces in which the bearing walls and other major structural elements are generally of two-hour fire-resistance rating.

Construction class I-D. Includes buildings and spaces in which the bearing walls and other major structural elements are generally of one-hour fire-resistance rating.

Construction class I-E. Includes buildings and spaces in which the bearing walls and other major structural elements generally have no fire- resistance rating.

Page 2 (Diagram)

Page 2 of the Building Information Card contains a color-coded plot plan and elevation of the building detailing bordering streets, entrances, floors, stairs, elevators, shafts, standpipes and mechanical equipment room locations. Provide a legend and layout conforming to the Appendix B-1 format.

The color-coded plot plan shall depict the following information:

- *Floor plan of the lowest floor provided with fire apparatus access.*
- *Location of the fire command center. If the fire command center is located on a floor other than the lowest floor provided with fire apparatus access, indicate its position on the plot plan (which shows the lowest floor with fire apparatus access) but include in the legend the floor on which it is actually located*
- *Bordering streets*
- *Entrances*
- *Shafts*
- *Location and designation of stairwells and elevators*
  - Indicate stairwell and elevator designations (e.g. bank A, stairwell C).
  - Indicate which stairwells contain standpipe connections.
- *Fire towers*
- *Fire department connections*
- *Geographic north indicator*

The elevation of the building shall depict the following information:

- *All floors (except access stairs), including below grade floors, serviced by exit stairwells*
- *Access stairs*
- *Mechanical equipment rooms (MER) and the HVAC zones controlled from such MER*

- *Stairwells containing standpipe connections*
- *Floors serviced by each elevator bank and the cars that service them (including below grade floors) and blind shafts*
- *Floors above ground level at which a stairwell terminates, or connects (by means of a horizontal exit passageway) to a different vertical shaft in which it continues to descend*

The plot plan and elevation diagram shall be color-coded as follows:

- *Elevators: blue;*
- *Standpipes: red;*
- *Stairwells: green;*
- *Blind shaft: pale blue;*
- *Access stairs/escalators: orange;*
- *Fire command center and mechanical equipment rooms: yellow*

COMBINED FIRE SAFETY/EMERGENCY ACTION PLAN (APPENDIX B-2)

OFFICE BUILDING INFORMATION CARD

(For use by Fire Department personnel)

1. BUILDING INFORMATION: BIN#_____

Address:

A/K/A:

Construction Class:

Office Floors:

Residential / Hotel Floors:

2. BUILDING STATISTICS:

Stories: Height: Width:

Type of Construction:

Truss Construction: Roof: Yes / No

Floors: Yes / No If yes, what floors:

Horizontal Connections: Passageway / Utility Pipe Chase

3. STAIRWELLS:

Designation Floors Served Pressurized Standpipe

Re-entry floors: _____

Access /Convenience Stair Located Between Floors:

4. ELEVATORS:

Bank Designation Car Numbers Floors Served

5. VENTILATION:

HVAC Zones: _____

Bldg. Management System (BMS): Yes / No

Location: On-site /

Off-site emergency number:

Smoke Management System /

6. UTILITIES:

All Fuel Oil Tank Locations (Capacity): _____ (___ gal); _____ (___ gal); _____ (___gal); _____ (___gal)

Natural Gas Service: Yes / No Shutoff location:_____

7. FIRE PROTECTION SYTEMS:

Standpipe Locations: _____

Standpipe Isolation Valve Locations: _____

FD Connection Locations: _____

Building Fully Sprinkled: Yes / No

Partially Sprinkled: Floors ____ ____ ____ ____ ___

8. HAZARDOUS MATERIALS:

NAME OF PRODUCT/QUANTITY	LOCATION
_____	_____
_____	_____
_____	_____
_____	_____
_____	_____

9. COMMUNICATIONS:

Number of Radios for FDNY Use: _____

24 hr Location:

10. TEMPORARY CONSIDERATIONS

11. BUILDING FIRE SAFETY INFORMATION:

Fire Safety/EAP Director: _____

Work: ( )-_____-_____

Emergency: ( )-_____-_____

Building Engineer:

Work: ( )-_____-_____

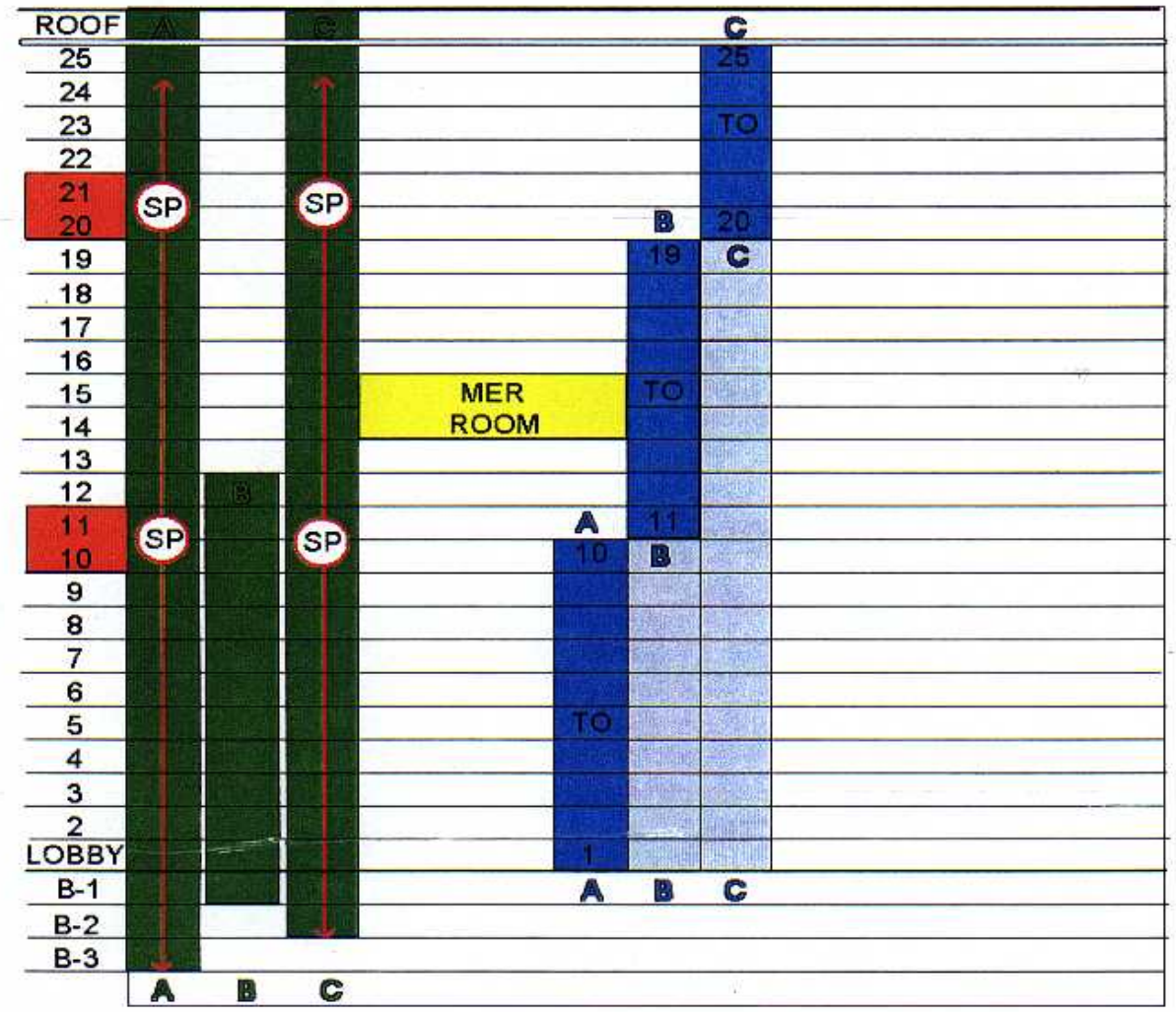
ROOF
25
24
23
22
21
20
19
18
17
16
15
14
13
12
11
10
9
8
7
6
5
4
3
2
LOBBY
B-1
B-2
B-3
SP
MER ROOM
TO
A
B
C

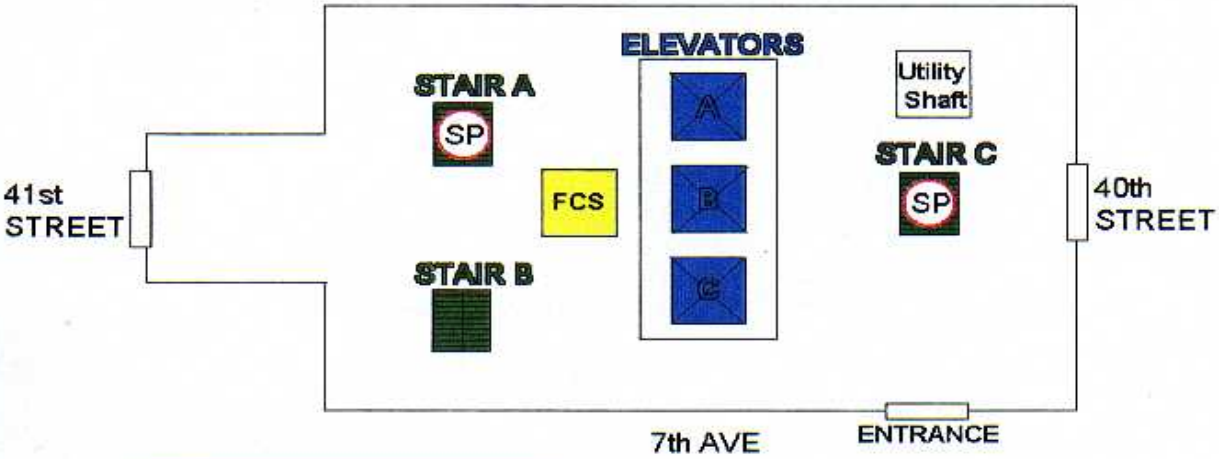
ELEVATORS
STAIR A
SP
FCS
STAIR B
Utility Shaft
STAIR C
41st STREET
40th STREET
7th AVE
ENTRANCE

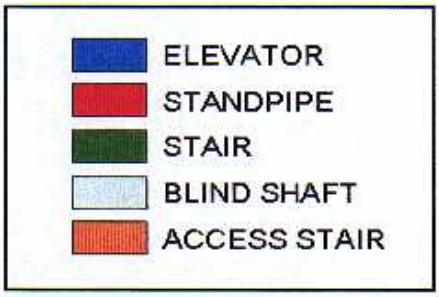
ELEVATOR
STANDPIPE
STAIR
BLIND SHAFT
ACCESS STAIR

Combined Fire Safety/Emergency Action Plan (Appendix B-2)
Office Buildings
Building Information Card

Instructions

A Building Information Card (BIC), in the format set forth as Appendix B-2, must be maintained at the fire command center, and made available to Fire Department representatives or emergency response personnel, upon request. The Building Information Card must be 11" x 17" in size, double sided. The BIC required to be maintained at the fire command center must be laminated; the one submitted for plan approval does not.

Page 1 of the BIC requires detailed building information, including information regarding elevators, stairwells, water supply and utilities, fire extinguishing systems and ventilation systems.

Page 2 of the BIC requires a color-coded plot plan and elevation of the building that details bordering streets, entrances, floors, stairs, elevators, shafts, standpipes, and mechanical equipment room locations.

Page 1 (Written information)

Page 1 of the Building Information Card requires written information about the building. Complete all sections of the form. No parts should be left blank; and if any part does not apply, enter N/A.

Box 1 BUILDING INFORMATION

ADDRESS: Provide complete address (e.g. 9 MetroTech Center)
A/K/A: Provide any other street addresses (e.g. 144 Tech Place)
CONSTRUCTION CLASS: For buildings constructed under the 1968 NYC Building Code or prior code provide the1968 Building Code construction classification (see reference 1 below). For buildings constructed under the 2008 Building Code provide the 2008 Building Code construction type as set forth in Building Code Section 602. Indicate the code used when completing the card (e.g. I-A (1968 Code) or II-A (2008 Code)).
OFFICE FLOORS: List all floors designated for Occupancy Group B (office) use (e.g. Flr 2-14).
RESIDENTIAL/HOTEL FLOORS: List all floors designated for Occupancy Group R-2 (residential), and hotel occupancy (e.g. Flr 1-2 hotel, Flr 3-22 residential).
RETAIL FLOORS: List all floors with retail occupancy space.
PUBLIC ASSEMBLY AREAS: List all floors having public assembly areas (e.g. Flr 1 theater, Flr 20 restaurant).
LOCATION OF DAY CARE CENTERS: List all locations having day care centers.
BUILDING POPULATION: DAY/NIGHT/WEEKEND: List the number of building employees and visitors in the building during the day, night and weekend. These numbers should coincide with information contained in Appendix A-2, Table 6.

Box 2 BUILDING STATISTICS

STORIES: List number of floors above and below grade.
HEIGHT: Provide building height in feet.
WIDTH: Provide building frontage width in feet.
TYPE OF CONSRUCTION: List the predominate type of building material used in the construction of the building. (e.g. concrete and steel, concrete).

TRUSS CONSTRUCTION: ROOF / FLOORS: Circle "Yes" if roof is of truss construction; Circle "No" if it is not. Also, list all floors having any form of truss construction.
HORIZONTAL CONNECTIONS: List the location and type of any horizontal connection to an adjacent building (e.g. passageways, utility pipe chase, cellars, etc.).
ROOF SETBACK LEVELS: A set back is an "area formed when the floor area of the building is reduced thus requiring the exterior wall of a building to be recessed." List all floor numbers having setbacks.

Box 3 STAIRWELLS

DESIGNATION List the letter designations of all stairwells.
FLOORS SERVED: List the range of floors served for each stairwell.
PRESSURIZED: List any stairwells provided with stairwell pressurization.
STANDPIPES: List the stairwells that contain standpipe hose connections.
RE-ENTRY FLOORS: List all stairwell re-entry floors.
ACCESS/CONVENIENCE STAIRS: List the floors served (e.g. Flr 2-3, 5-7). Indicate escalators.
ROOF ACCESS: List stairwells that have access to roof.
FIRE TOWER: List any stairwells that are fire towers.

Box 4 ELEVATORS

BANK: List the letter designations for all elevator banks.
CAR NUMBERS: List the individual elevator car numbers in each bank.
FLOORS SERVED: List floors served by each elevator.
FREIGHT ELEVATOR BANK: List bank and car numbers of freight elevators.
SKY LOBBY: A sky lobby is an elevator bank whose lowest terminal level is on an upper floor. Not all buildings have sky lobbies. If a sky lobby is provided, list each floor on which a sky lobby is located.

Box 5 VENTILATION

HVAC ZONES: List the zones or floors the HVAC system supplies. Several zones, such as "Flrs 1-10, 11-20, 20-35", or individual "package units" for each floor are examples.
BUILDING MANAGEMENT SYSTEM: If there is a building management system provide its location.
OFF-SITE EMERGENCY NUMBER: Provide telephone number.
SMOKE MANAGEMENT SYSTEM/PURGE CAPABILITY: Indicate Yes or No / Auto or Manual
LOCATION OF MECHANICAL ROOMS: Provide location(s).

Box 6 UTILITIES

The utilities' information provided in this section must be consistent with the information provided in Appendix A-2, Table 7, Section 4.

ALL FUEL OIL TANK LOCATIONS: List capacity and location of each tank.
NATURAL GAS SERVICE: Provide location of gas shutoff valve.
EMERGENCY GENERATOR LOCATION: Provide location of each emergency generator.
ROOF STORAGE: LPG/DIESEL/OTHER: Check appropriate box. If other, indicate type of fuel.

Box 7 FIRE PROTECTION SYSTEMS

STANDPIPE LOCATIONS: Provide locations of standpipes. Standpipes in stairwells should be depicted in the diagram on page 2. If other than in a stairwell, give exact locations (e.g. across from "B" bank elevators; east side of building; etc.)
STANDPIPE ISOLATION VALVE LOCATIONS: Provide valve locations and floor (e.g. Flr 19 utility closet, Flr 10 "B" stairwell).

FD CONNECTION LOCATION: Provide location(s) of FD connection(s) on exterior of building. Indicate which street side and the number of connections found on that side. (e.g. (2) Sixth Ave side; (1) 37th St side)

BUILDING FULLY SPRINKLED: Indicate Yes or No

PARTIALLY SPRINKLED FLOORS: In a building that is not completely sprinklered, list any floors that are sprinkled.

PRV VALVE FLOOR LOCATIONS: Indicate location of pressure reducing valves.

FIRE PUMP LOCATIONS: List the floor(s) on which the fire pumps are installed.

NON-WATER FIRE EXTINGUISHING SYSTEMS: List type of system and location (e.g. Flr 1 restaurant wet chemical system; Flr 10 electrical closet carbon dioxide system).

Box 8 HAZARDOUS MATERIALS

NAME OF PRODUCT/QUANTITY: Provide information. If none, mark N/A.

LOCATION: Provide information. If none, mark N/A.

- *Any storage location within the building that contains less than 5 gallons of flammable liquid, 25 gallons of combustible liquid or 55 gallons of corrosive material may be excluded.*
- *In addition to the name of product for each hazardous material, indicate its United States Department of Transportation classification.*
- *Hazardous material storage locations within the building identified elsewhere on this Building Information Card, such as fuel oil storage, are not required to be listed in this box.*
- *Identify areas/rooms of special concern (such as an X-Ray clinic, U.P.S rooms/battery rooms, transformer locations, cellular antennas, etc.) as special notes.*

Box 9 COMMUNICATIONS

NUMBER OF RADIOS FOR FDNY USE: Indicate the number of building radios available for emergency responder use. If none, mark N/A.

24 HOUR LOCATION: Indicate location and availability of radios (e.g. fire command center 24/7, fire command center 8AM to 4PM). If none, mark N/A.

COMMUNICATIONS FOR FDNY USE: Indicate any other means of communication available for emergency responders use (e.g. repeaters). If none,, mark N/A.

Box 10 TEMPORARY CONSIDERATIONS

Fill in with erasable markings. This section is provided to allow the Building Information Card to be kept current to reflect such conditions as construction projects in progress, or out-of-service fire protection or life safety systems.

Box 11- BUILDING FIRE SAFETY INFORMATION

Provide the name and contact information (work and emergency telephone numbers) for the fire safety/EAP director, building engineer and managing agent.

REFERENCES (BOX 1)

1968 NYC Building Code Construction Classifications

Construction Group	Class
I - Noncombustible	I - A - (4-hr. protected)
	I - B - (3-hr. protected)
	I - C - (2-hr. protected)

	I - D - (1-hr. protected)
	I - E - (unprotected)
II - Combustible	II - A - (heavy timber)
	II - B - (protected wood joist)
	II - C - (unprotected wood joist)
	II - D - (protected wood frame)
	II - E - (unprotected wood frame)

Buildings or spaces of noncombustible construction (construction group I) are those in which the walls, exit ways, shafts, structural members, floors, and roofs are constructed of noncombustible materials and assemblies affording fire-resistance ratings. The noncombustible construction group I is broken down into five different classes, I-A, I-B, I-C, I-D and I-E as follows:

Construction class I-A. Includes buildings and spaces in which the bearing walls and other major structural elements are generally of four-hour fire-resistance rating.

Construction class I-B. Includes buildings and spaces in which the bearing walls and other major structural elements are generally of three-hour fire-resistance rating.

Construction class I-C. Includes buildings and spaces in which the bearing walls and other major structural elements are generally of two-hour fire-resistance rating.

Construction class I-D. Includes buildings and spaces in which the bearing walls and other major structural elements are generally of one-hour fire-resistance rating.

Construction class I-E. Includes buildings and spaces in which the bearing walls and other major structural elements generally have no fire- resistance rating.

Page 2 (Diagram)

Page 2 of the Building Information Card contains a color-coded plot plan and elevation of the building detailing bordering streets, entrances, floors, stairs, elevators, shafts, standpipes and mechanical equipment room locations. Provide a legend and layout conforming to the Appendix B-2 format.

The color-coded plot plan shall depict the following information:

- *Floor plan of the lowest floor provided with fire apparatus access*
- *Location of fire command center. If the fire command center is located on a floor other than the lowest floor provided with fire apparatus access, indicate its position on the plot plan (which shows the lowest floor with fire apparatus access) but include in the legend the floor on which it is actually located.*
- *Bordering streets*
- *Entrances*
- *Shafts*
- *Location and designation of stairwells and elevators.*
  - Indicate stairwell and elevator designations (e.g. elevator bank A, stairwell C).
  - Indicate which stairwell contain standpipe connections.
- *Fire towers*
- *Fire department connections*
- *Geographic north indicator*

The elevation of the building shall depict the following information:

- *All floors (except access stairs), including below grade floors, serviced by exit stairwell*

- *Access stairs*
- *Mechanical equipment rooms (MER) and the HVAC zones controlled from such MER*
- *Stairwells containing standpipe connections*
- *Floors serviced by each elevator bank and the cars that service them (including below grade floors) and blind shafts*
- *Floors above ground level at which a stairwell terminates, or connects (by means of a horizontal exit passageway) to a different vertical shaft in which it continues to descend*

The plot plan and elevation diagram shall be color-coded as follows:

- *Elevators: blue;*
- *Standpipes: red;*
- *Stairwells: green;*
- *Blind shaft: pale blue;*
- *Access stairs/escalators: orange;*
- *Fire command center and mechanical equipment rooms: yellow*

Combined Fire Safety /Emergency Action Plan Staffing Chart (Appendix C-2)

BUILDING ADDRESS: _____

_____
FIRE SAFETY/EAP DIRECTOR

_____ _____
DEPUTY FIRE SAFETY/EAP DIRECTOR *DEPUTY FIRE SAFETY/EAP DIRECTOR*

_____ _____
DEPUTY FIRE SAFETY/EAP DIRECTOR *DEPUTY FIRE SAFETY/EAP DIRECTOR*

_____
FLOOR NO.

FIRE SAFETY AND EAP WARDEN

_____ _____
Name Phone Number

DEPUTY FIRE SAFETY AND EAP WARDENS

_____ _____ _____ _____
Name Phone Name Phone

_____ _____ _____ _____
Name Phone Name Phone

FIRE SAFETY AND EAP SEARCHERS

MALE FEMALE

_____ _____

_____ _____

Any person discovering fire, smoke or other emergency condition should without delay cause the transmission of a fire alarm by calling 911 or activating a fire alarm box. Notify the Fire Safety/EAP Director or Fire Safety Warden that an alarm has been transmitted.

In the event that it becomes necessary to implement the building's Fire Safety and Evacuation Plan or the Emergency Action Plan, listen for and follow the directions given by the Fire Safety/EAP Director/staff and emergency response personnel. Elevators should never be used in a fire. In all other emergencies, use the elevators only if and when directed to do so by the Fire Safety Director/staff or emergency response personnel.

If the Fire Safety Warden and EAP Wardens; Deputy Fire Safety Warden and Deputy EAP Wardens; and Fire Safety Searchers and EAP Searchers are different individuals, provide the names of all such individuals in the chart and indicate the plan for which such individual is designated.

Date prepared: _____

Building Profile (Appendix D)

BUILDING ADDRESS: _____ Zip Code: _____

1. Owner or person in charge of the building.
   Company: _____ Name of representative: _____
   Address *(include Zip Code)*: _____
   Business Telephone No.: _____

2. Fire Safety Director (FSD) and Deputy Fire Safety Director (DFSD).

	Name	Work Location Telephone/Cell Phone
FSD:	_____	_____
DFSD:	_____	_____
DFSD:	_____	_____
DFSD:	_____	_____
DFSD:	_____	_____
DFSD:	_____	_____
DFSD:	_____	_____

3. Attach copy of: current DOB Certificate of Occupancy (C of O), Temporary Certificate of Occupancy, Letter of No Objection or Affidavit of No Certificate of Occupancy.
   If under construction attach copy of DOB Schedule A.
   Location where C of O is posted in the building: _____

4. General description of the building:
   Building height in feet: _____ No. of stories: _____ No. of basements: _____
   Area (length x width) at ground level: _____ (sf) No. of guest rooms: _____
   Class of construction as listed on current C of O: _____

5a. Stairwells, fire towers, fire escapes and access/convenience stairs. *Include alphabetical letter identification, location, and floors served.*

Letter Designation	Type	Location	Floors Served	Floor No. of Any Horizontal Exit Passageway
____	_____	_____	_____	
____	_____	_____	_____	
____	_____	_____	_____	
____	_____	_____	_____	
____	_____	_____	_____	

5b. List stairwell re-entry floors and indicate if fail-safe door lock release is installed on re-entry floor:
   _____
   _____

6. Elevator and/or escalator information:
Complete for each elevator bank and each elevator car in such bank.

Elevator Bank Designation	Elevator Car Number	Passenger or Freight	Operation (Manual/Auto)	Levels (floors) served	Phase I Recall/Phase II Service *(Yes/No)*	Elevator Machine Room Location	2 Way Voice to Fire Command Center *(Yes/No)*	In Common Shaft with Other Cars? *(Yes/No)*

Elevator cars in common shafts *(Identify all elevators by bank designation and car numbers, that are installed in a common shaft.)*

_____ _____ _____

_____ _____ _____

Number of escalators: _____

Escalator Levels (floors) served

_____ _____

_____ _____

7. Interior fire alarms, or alarms to central stations. Type of fire alarm/communications *(Brand and Model No.)* and name of central station monitoring company.

_____

_____

8. Communications systems other than required building fire alarm system *(e.g., walkie-talkies, cellular telephones)*

_____

_____

9. Standpipe systems:
Location of riser: _____ Size of riser: _____
Location of riser: _____ Size of riser: _____
No. of gravity tanks: _____ Location(s): _____
Capacity of gravity tank(s) (gals): _____Fire Reserve (gals): _____
No. of pressure tanks: _____ Location(s): _____
Capacity of pressure tank(s) (gals): _____
No. of fire pumps: _____ Location/output(s) (gpm): _____

_____

Type(s) of pump(s) (automatic or manual): _____

_____

Number and location(s) of fire department connection(s): _____

_____

Name of Certificate of Fitness holder: _____
Certificate No.: _____ Expiration date:_____

10. Sprinkler system information:
Primary water supply: _____ Secondary water supply: _____
Combination standpipe/sprinkler system? *(Yes/No)*: _____
Areas protected: _____

_____

No. of gravity tanks: _____ Location(s): _____
Capacity of gravity tank(s) (gals): _____
No. of pressure tanks: _____ Location(s): _____
Capacity of pressure tank(s) (gals): _____
No. of fire pumps: _____ Location/output(s) (gpm): _____
Number and location(s) of fire department connection(s): _____

_____

Name of Certificate of Fitness holder: _____
Certificate No.: _____ Expiration date: _____

11. Fire extinguishing systems *(e.g., Halon, Pre-Action, Commercial Cooking, Deluge, Clean Agent). Indicate location(s) and connection (Yes/No) to building fire alarm system.*

_____

_____

_____

12. Average number of employees and guests normally in building.
Employees : Daytime: _____ Nighttime: _____
Guests: Daytime: _____ Nighttime: _____

13. Average number and location of persons with special needs in building. Keep list readily available for FDNY inspection at fire command center.
Daytime: ____ Location(s)/Number of: _____
Nighttime: ___ Location(s)/Number of: _____

14. Number of persons normally visiting building.
Daytime: _____ Nighttime: _____

15. Service equipment:

(a) Electric power:
Primary – Street name where power enters the building: _____
Auxiliary – Auxiliary generator *(Yes/No)*: _____
Location of generator: _____ Type of fuel: _____
List capacity and location of the tank in Item 16

(b) Emergency Lighting:

Type	Location(s)
_____	_____
_____	_____
_____	_____

(c) Heating:
Type: _____
Fuel: _____
Location of heating unit: _____

(d) Ventilation:
Emergency means of exhausting heat and smoke *(Yes/No)*: _____
Smoke purge system *(Yes/No)*: _____ Smoke shaft *(Yes/No)*: _____
Do the windows open on any floors? *(Yes/No)*: _____
If Yes, list locations where windows open: _____
_____
Are keys required? *(Yes/No)*: _____ If Yes, list location: _____
Type of key (1620 or 2642) if required: _____

(e) Air conditioning system – Be specific:
Central A/C *(Yes/No)*: _____ Through floor duct work *(Yes/No)*: _____
If Yes, list floors: _____

Location of Supply Fan	Area Served
_____	_____
_____	_____

Package units on each floor *(Yes/No)*: _____ If Yes,

Unit Manufacturer	Compressor HP or Tonnage	Location	Area Served
_____	_____	_____	_____
_____	_____	_____	_____
_____	_____	_____	_____

(f) Refuse storage and disposal *(Yes/No)*: _____
If Yes, list type and location: _____

(g) Firefighting equipment and appliances, other than standpipe and sprinkler systems.
_____

(h) Roof set-backs, utility shafts, cross bridges, passageway between buildings (interconnected buildings), tunnels, linen chutes, refuse chutes and other pertinent building information. *(indicate type and location)*

_____

_____

16. Storage and use of flammable and combustible liquids and flammable gases (including fuel oil storage tanks). *(indicate type, quantity and location)*

_____

_____

17. Special occupancies in the building:
Examples include places of assembly, studios, cafeterias, auditoriums, theaters and mercantile occupancies. (indicate type and location)

_____

_____

18. Number and location of electrical transformers containing polychlorinated biphenyls (PCB).

_____

_____

_____

§404-02 Office Building Emergency Action Plans

(a) Scope. This section sets forth standards, requirements and procedures for the preparation, content, submission, acceptance and amendment of *office building emergency action plans*; designation, qualifications and training of *EAP staff*, and their duties and responsibilities; reporting of emergencies to the *Department*; education of *building occupants*, including the conduct of drills; recordkeeping; obligations of *building occupants* and employers of *building occupants*; and provision of assistance to *building occupants* with special needs.

(b) Definitions. The following terms shall, for purposes of this section, have the meanings shown herein:

Critical operations staff. Building personnel or other *building occupants* designated to remain after the *emergency action plan* is implemented to perform or shut down critical operations, or perform essential services, before they *shelter in place*, relocate in building or evacuate.

EAP. *Emergency action plan*.

EAP staff. The individuals identified in an *emergency action plan* as responsible for the implementation of such plan, including but not limited to the *fire safety/EAP director*, *deputy fire safety/EAP director*, EAP building evacuation supervisor, EAP wardens, deputy EAP wardens, EAP searchers, members of the EAP brigade and *critical operation staff*.

Emergency. An incident involving an explosion, a biological, chemical, radiological, nuclear or other chemical incident or release, natural disaster, or the threat thereof, or a declaration of *emergency* by a lawful authority, that requires implementation of a building's *emergency action plan* to help ensure the safety of the *building occupants*.

Neighboring buildings. Buildings subject to the provisions of this section that are located on either side of a city street, up to a distance of 200 feet apart, unless separated by a barrier to movement, such as a restricted access roadway or railway.

(c) General Requirements

(1) Applicability. This section applies to all Group B *office building* occupancies as set forth in FC404.2.2.

(2) Preparation of emergency action plans

(A) An *owner* shall cause an *emergency action plan* to be prepared for such building, and periodically reviewed and amended, in accordance with R404-02(d) through (h) and (k). The *emergency action plan* shall be in

the form set forth in R404-01 Appendix A-2, and shall include a building information card in the form set forth in R404-01 Appendix B-2.

(B) An *owner* shall cause a *fire safety/EAP director*, and *deputy fire safety/EAP directors*, EAP building evacuation supervisors, EAP wardens, deputy EAP wardens, EAP brigade members, EAP searchers and *critical operations staff*, to be designated in the *emergency action plan* in accordance with R404-02 (d) and (h), and R113-03, with the authority, duties and responsibilities set forth therein.

(C) An *owner* shall consult with the *owners* of *neighboring buildings* in connection with the preparation of the building's *emergency action plan*, with respect to the matters set forth in R404-02(i).

(3) Emergency action plan submission, acceptance, training and recordkeeping

(A) An *owner* shall cause an *emergency action plan* to be submitted to the *Department*, and obtain acceptance from the *Department*, in accordance with FC404.6 and R404-02(j).

(B) An *owner* shall cause the *emergency action plan* and educational materials to be distributed, and *EAP drills* conducted, in accordance with FC405.3 and R404-02(l).

(C) An *owner* shall cause recordkeeping to be maintained in accordance with FC405.5 and R404-02(m).

(D) A paper copy of the *emergency action plan*, including floor plans, shall be maintained at the *fire command center* and shall be made available for inspection by any *Department* representative.

(4) Compliance with emergency action plan. All *building occupants* and employers of *building occupants* shall comply with the directions of the *fire safety/EAP director* and *EAP staff* upon implementation of the *emergency action plan*, and otherwise fulfill their obligations in accordance with FC405.2 and R404-02(n).

(5) Authority to implement the emergency action plan

(A) The *emergency action plan* shall be immediately implemented and *building occupants* directed to *shelter in place*, *in-building relocate*, *partially evacuate* or *evacuate*, whenever such action is deemed necessary to ensure the safety of *building occupants*.

(B) The ability of the *fire safety/EAP director* to implement the *emergency action plan* shall not be subordinated to the authority of any other person or impaired by any notification procedure established by the *owner*, in

circumstances where, the *fire safety/EAP director* becomes aware of an *emergency* presenting an immediate danger to *building occupants*, and, in the absence of direction from lawful authorities, determines that delaying implementation of the *emergency action plan* to obtain direction from lawful authorities, the *owner* or the *owner*'s designated representative would likely result in harm to *building occupants*. The *fire safety/EAP director* shall determine the safest and most efficient course of action consistent with the *emergency action plan*, depending on the nature of the *emergency*.

(C) The authority of the *fire safety/EAP director* to implement the *emergency action plan*, as set forth in FC Chapter 4, this section and in the plan itself, shall be assumed by a *deputy fire safety/EAP director* in the absence of the *fire safety/EAP director*, or, if no *fire safety/EAP director* or *deputy fire safety/EAP director* is required to be on duty, by a EAP building evacuation supervisor.

(6) Compliance with orders of lawful authorities

(A) The *owner*, *fire safety/EAP director* and all other *EAP staff* and *building occupants* shall comply with the orders of the *Department* or other incident commander or emergency response personnel should such incident commander or emergency response personnel be present at the building.

(B) In the absence of any direction from an emergency response agency, incident commander or emergency response personnel, the *owner*, *fire safety/EAP director* and all other *EAP staff* and *building occupants* shall comply with the official announcements or directions of the Mayor of the City of New York or other lawful authority.

(7) Official notifications of emergency and implementation of emergency action plan. The *fire safety/EAP director* shall immediately report any *emergency* to 911 and notify the 911 operator that they are implementing the *emergency action plan.* The *fire safety/EAP director* may report to 911 any condition that is being investigated as a possible *emergency*.

(8) Communications with building occupants

(A) *The fire safety/EAP director* shall be responsible for communicating information and directions to *building occupants* whenever the *emergency action plan* is implemented, including during an *EAP drill*.

(B) Implementation of the *EAP* or the conduct of an *EAP drill* shall be communicated to *building occupants* by the sounding of an alarm or alert

tone followed by an announcement. The announcement shall include the following information:

(*1*) whether the announcement is being made in connection with an *emergency* condition or an *EAP drill*, and if in connection with an *emergency*:

(*a*) what has occurred;

(*b*) where it has occurred;

(*c*) what provisions of the *emergency action plan* will be implemented; and

(*d*) why it is necessary to implement this provision of the *emergency action plan*.

The announcement shall be repeated or updated on a frequent basis, to inform and reassure *building occupants*.

(9) EAP staff training. The *EAP staff* training required by FC406 and R404-02(h)(1)(B)(*3*) shall be in the form of live instruction, but may be supplemented by video presentations and/or distribution of other educational materials. Training may be conducted in the form of computerized training, without live instruction, provided that such computerized training is interactive, includes an evaluation of the *EAP staff* members' understanding of the training materials, and is not conducted in lieu of live instruction for more than one-half (½) of the required *EAP staff* training sessions per year.

(10) EAP instructional drills. The *EAP* instructional *drills* required by R404-02(l)(1)(B)(*1*)(*a*) shall be in the form of live instruction, but may be supplemented by video presentations and/or distribution of other educational materials. Such instructional drills may be conducted in the form of computerized training, without live instruction, provided that such computerized training is interactive, includes an evaluation of the participants' understanding of the training materials, and is not conducted in lieu of live instruction for more than one-half (½) of the required *FSP* drills.

(d) Content of Emergency Action Plans. Each *emergency action plan* adopted pursuant to this section shall include the following provisions:

(1) Types of Emergency Responses

(A) The *emergency action plan* shall set forth the circumstances and procedures for the *sheltering in place*, *in-building relocation*, *partial*

evacuation and/or *evacuation* of *building occupants* in response to an *emergency*.

(B) The *emergency action plan* shall address how such measures will be implemented during *regular business hours*, and at times other than *regular business hours*, when *EAP staff* may be absent from the building.

(2) Designation of EAP Staff. The *emergency action plan* shall designate:

(A) a *fire safety/EAP director* and a sufficient number of *deputy fire safety/EAP directors* to ensure that a *deputy fire safety/EAP director* is present to perform the duties of the *fire safety/EAP director* at all times that a *fire safety/EAP director* is required to be on duty, but is absent;

(B) at least one (1) person as a EAP building evacuation supervisor, and qualified to serve in such position, shall be present and on duty in the building at all times when a *fire safety/EAP director* is not required to be on duty, but there are occupants in the building. The EAP building evacuation supervisor at such times shall exercise the authority and responsibility of the *fire safety/EAP director* to implement the *emergency action plan*;

(C) at least one (1) EAP warden for each floor of the building. EAP wardens shall be on duty on each floor during *regular business hours* for such floor;

(D) at least one (1) deputy EAP warden for each employer of *building occupants* on a floor. If the floor area occupied by an employer of *building occupants* on a single floor exceeds 7,500 square feet, a deputy EAP warden shall be designated for each 7,500 square feet or portion thereof. At least the minimum required number of deputy EAP wardens shall be on duty on each floor during the *regular business hours* of such employer;

(E) at least one (1) male and one (1) female EAP searcher for each employer of *building occupants* on a floor. Such EAP searchers shall be on duty on each floor during the *regular business hours* of such employer;

(F) the members of a EAP brigade. The EAP brigade shall consist of the building manager, chief engineer and director of security (or, in their absence, qualified designees), and other building personnel, office employees or other *building occupants* designated to assist in the implementation of the *emergency action plan*, including persons assigned to assist *building occupants* that require assistance to participate in the plan. EAP brigade members shall be on duty during *regular business*

hours. The *fire safety/EAP director* and *deputy fire safety/EAP directors* shall not be designated as EAP brigade members; and

(G) *critical operations staff*, who are to be exempted from participation in *EAP drills* and/or delayed in participating in the implementation of the *emergency action plan*, as set forth in the *emergency action plan*. Such staff shall be designated based on the critical nature of their duties, either to the operation of the building service equipment or other essential services. The *emergency action plan* shall identify each such individual and the essential service that the individual is required to perform even under *emergency* conditions. Employers of *building occupants* may request that the *fire safety/EAP director* designate certain office employees as *critical operations staff*. Such requests shall be granted only if the employer can demonstrate that the employee is performing a public safety function or essential service for the employer in which there is a compelling public interest in maintaining even in the event of an *emergency*. All requests and designations shall be documented in writing and made available for inspection by *Department* representatives, upon request.

(3) Designation of fire command center. Except as otherwise provided in R404-02(d)(4), the *emergency action plan* shall designate the *fire command center* as the location from which the *fire safety/EAP director* shall coordinate implementation of the *emergency action plan* or conduct an *EAP drill*.

(4) Communications with building occupants

(A) The *emergency action plan* shall designate the primary and alternative means by which the *fire safety/EAP director* will communicate information and directions to *building occupants*. Buildings equipped with a *fire alarm system* with voice communication capability may utilize such *fire alarm system* for communications relating to the implementation of the *emergency action plan* or the conduct of *EAP drills*.

(B) The *emergency action plan* shall set forth procedures for announcing the implementation of the *emergency action plan* or the conduct of an *EAP drill*.

(5) Use of elevators and other building systems. The *emergency action plan* shall specify whether and how elevators and other building systems will be used to implement such plan. Elevators may be used to implement the *emergency action plan*, subject to the following considerations:

(A) Floors or *building occupants* to be evacuated or relocated by elevators shall be designated in the *emergency action plan*.

(B) Elevators that are to be used for *evacuation*, *partial evacuation*, *shelter in place*, or *in-building relocation* must be provided with two-way voice communication to the *fire command center* in accordance with the *Building Code* requirements.

(C) Elevator use shall be directed only when the *fire safety/EAP director or deputy fire safety/EAP director* has assessed the situation and determined that such use would be safe.

(D) Only designated elevators shall be used and only those elevators so designated shall remain in service. All other elevators shall be recalled to the lobby or their lowest floor of travel.

(E) Movement of elevators shall be controlled either by operation in manual mode by an *EAP staff* member or at the elevator control panel in the lobby, under the direct supervision of the *fire safety/EAP director*.

(F) *Building occupants* shall board elevators only on designated floors and disembark elevators at floors as directed by the *fire safety/EAP director*.

(6) Assistance to building occupants with special needs

(A) The *emergency action plan* shall establish procedures for identifying in advance *building occupants* who require assistance to participate in the *emergency action plan* because of an infirmity, disability or other special need, and procedures for providing such assistance. Assistance that may be required may include implementing procedures or modifying equipment to ensure receipt of announcements, designating areas for assistance, and designating persons to provide assistance.

(B) The *owner* shall make the procedure for requesting such assistance known to all *building occupants* and employers of *building occupants*.

(C) A list of the *building occupants* who have requested such assistance, and their work location, shall be maintained at the *fire command center*, and made available to *Department* representatives or emergency response personnel, upon request.

(D) The *fire safety/EAP director*, EAP wardens and, as appropriate, other *EAP staff*, shall periodically review the list of such *building occupants* on the floors or other areas of the building in which they perform their duties, so as to familiarize themselves with the *building occupants* requiring assistance to participate in the *emergency action plan*.

(7) Floor plans. The *emergency action plan* shall include, for each floor of the building (including any floors below grade), a current floor plan bearing the

signature and seal of a *registered design professional*, containing the information required by FC 404.3.1(3) and (4), marked to reflect exit routes, *in-building relocation areas*, and other information contained in the *emergency action plan* amenable to graphic representation. Such plans shall be submitted to the *Department* in a form and manner to be specified by the *Department*, as set forth in FC404.6 and R404-02(j).

(8) Building information card. A building information card, in the format set forth in R404-01(c)(2)(A)(*2*) and R404-01 Appendix B-2, shall be maintained at the *fire command center*, and made available to *Department* representatives or emergency response personnel, upon request.

(9) EAP staff floor postings. Notices identifying the *EAP staff* shall be conspicuously posted on each floor, and kept at the *fire command center*, where they shall be made available for inspection by *Department* representatives. The format of such notices shall be as set forth in R404-01 Appendix C-2.

(e) Specific Requirements For Sheltering In Place

(1) The *sheltering in place* provisions of the *emergency action plan* shall be based on an analysis of the circumstances in which such action would best ensure the safety of *building occupants*, and the manner in which it could best be implemented in the building.

(2) The *emergency action plan* shall set forth the actions that would be taken in the event of *sheltering in place*, including, but not necessarily limited to, those in regard to the following building components or systems:

(A) access to and egress from the building, including entrances, *exits* and stairwells;

(B) elevator operation;

(C) ventilation system operation, including air handling equipment, heating, ventilation and air conditioning equipment and smoke management systems;

(D) openable windows;

(E) interior doors, including fire doors;

(F) electrical, natural gas, steam and other utility operations; and

(G) fuel oil storage systems and associated pumps and piping.

(f) Specific Requirements For In-Building Relocations

(1) The *in-building relocation* provisions of the *emergency action plan* shall be based on an analysis of the circumstances in which such action would best ensure the safety of *building occupants*, and the manner in which it could best be implemented in the building.

(2) The *emergency action plan* shall:

(A) set forth the number of *building occupants* on each floor;

(B) designate the *in-building relocation areas* to which *building occupants* could be relocated in building, and, for each such *in-building relocation area*, identify:

(*1*) the type of area (such as an interior office, conference room, file room or mechanical room);

(*2*) the floor and its exact location thereon;

(*3*) the type of protection it offers;

(*4*) the estimated maximum number of *building occupants* each relocation area can accommodate; and

(*5*) whether it affords access to water, lavatories and/or other facilities, equipment or supplies, including any pre-positioned equipment or supplies.

(C) designate the route by which *building occupants* would be directed to *in-building relocation areas* if such areas are on a different floor, and identify the stairwells and (if applicable) elevators to be utilized; and

(D) set forth the actions that would be taken with respect to building components or systems in the event of an *in-building relocation*, including the building components and systems set forth in R404-02 (e)(2); and

(E) the procedures by which employers of *building occupants* will account for their employees after an *in-building relocation* is completed.

(g) Specific Requirements For Partial Evacuations And Evacuations

(1) The *evacuation* provisions of the *emergency action plan* shall be based on an analysis of the circumstances in which such action would best ensure the safety of *building occupants*.

(2) The *emergency action plan* shall identify the safest and most efficient means of evacuating persons from the building or designated floors or areas thereof. Priority shall be given to *building occupants* on floors or other areas of the building most at risk of harm, and, in the designation of exit routes, to the avoidance of congestion.

(3) The *emergency action plan* shall:

(A) set forth the number of *building occupants* on each floor, including an estimate of the number of visitors, if any, on a typical day;

(B) identify the location of *exits*, stairwells and (if to be utilized) elevators, and their capacity; and

(C) set forth the actions that would be taken with respect to building components or systems in the event of a *partial evacuation* or *evacuation*, including the building components and systems set forth in R404-02(e)(2).

(4) The *emergency action plan* shall designate:

(A) primary designated exit routes for the *evacuation* of each floor or other area of the building, and alternative exit routes in the event that the primary designated routes cannot be used;

(B) whether *building occupants* will be directed to leave the area by any safe means (other than in circumstances that preclude such action, such as contamination), or directed to one (1) or more *assembly areas* that are:

(*1*) at a safe distance from the building (preferably a distance from the building not less than the height of the building);

(*2*) sufficient in number and size to accommodate the *building occupants* that will be assigned to report to such *assembly area*; and

(*3*) allow for the continuous movement of *building occupants* away from the building to their *assembly areas*;

(C) the procedures by which employers of *building occupants* will account for their employees after a *partial evacuation* or *evacuation* is completed.

(h) EAP Staff Requirements

(1) Fire safety/EAP director.

(A) Qualifications. The *fire safety/EAP director* shall be the person designated as the fire safety director in the *fire safety and evacuation plan*. The *fire safety/EAP director* shall hold a *fire safety/EAP director certificate of fitness* and otherwise possess the qualifications set forth in R113-03.

(B) Duties and responsibilities. The *fire safety/EAP director* shall:

(*1*) be present and on duty in the building during *regular business hours*;

(*2*) be fully familiar with the provisions of the *emergency action plan*;

(*3*) supervise and train the *deputy EAP directors*, EAP building evacuation supervisors, EAP wardens, deputy EAP wardens, EAP searchers, EAP brigade members, *critical operation staff* and other *EAP staff*, including conducting initial and periodic refresher training to maintain the state of readiness of such staff.. *Critical operations staff* exempt from participating in *EAP drills* shall receive training in evacuation procedures and other matters addressed during the *EAP drill*, and such other information as an individual would need to know by reason of their delayed participation in any evacuation or other implementation of the *emergency action plan*;

(*4*) select qualified building personnel for the EAP brigade, organize, train and supervise the EAP brigade, and be responsible for the state of readiness of the EAP brigade, in accordance with R404-02(h)(6);

(*5*) be responsible for a daily check of the availability of EAP wardens and deputy EAP wardens, and make such notifications or temporary assignments as are necessary to ensure adequate EAP staffing;

(*6*) immediately report to 911 any *emergency* and any determination to implement the *emergency action plan;*

(*7*) in the event of an *emergency* in or affecting the building, report to the *fire command center* or designated alternative location, and, if appropriate, implement the *emergency action plan* in accordance with its terms and the provisions of this section, and notify arriving emergency response personnel and incident commander of the *emergency* and the building response thereto;

(*8*) be responsible for communicating all information and directions to *building occupants* in accordance with R404-02(c)(8) and as may be required by the *emergency action plan;*

(*9*) conduct the *EAP drills* required by this section;

(*10*) approve the content of the *emergency action plan* educational materials and the *EAP drills* provided to *building occupants* pursuant to R404-02(l);

(*11*) ensure that the required notices are posted on the floors and that the required recordkeeping is maintained;

(*12*) review and approve the procedures established by employers of *building occupants* to account for *building occupants* after an *evacuation*, *partial evacuation*, *in-building relocation* or *sheltering in place*; and

(*13*) with respect to the implementation of *fire safety and evacuation plans* and the conduct of fire evacuations and *fire drills*, comply with the requirements of FC Chapter 4 and the *rules*.

(2) Deputy fire safety/EAP director

(A) Qualifications. The *deputy fire safety/EAP director* shall hold a *fire safety/EAP director certificate of fitness* and otherwise possess the qualifications set forth in R113-03. The *deputy fire safety/EAP director* shall receive training in the *emergency action plan* from the *fire safety/EAP director* in accordance with FC406.2.

(B) Duties and responsibilities. The *deputy fire safety/EAP director* shall:

(*1*) in the absence of the *fire safety* /*EAP director*, perform the duties of the *fire safety/EAP director*, as circumstances warrant, except that the *fire safety/EAP director* shall personally supervise all *FSP staff* training; and

(*2*) in the presence of the *fire safety/EAP director*, assist the *fire safety/EAP director* in carrying out the requirements of the *emergency action plan* and this section, as circumstances warrant.

(3) EAP building evacuation supervisor

(A) Qualifications. The EAP building evacuation supervisor shall receive training in the *emergency action plan* from the *fire safety/EAP director* as set forth in FC Table 406.2(2).

(B) Duties and responsibilities. The EAP building evacuation supervisor shall:

(*1*) in the absence of the *fire safety/EAP director* and *deputy fire safety/EAP director*, perform the duties of the *fire safety/EAP director*, as circumstances warrant; and

(*2*) in the presence of the *fire safety/EAP director*, assist the *fire safety/EAP director* in carrying out the requirements of the *emergency action plan* and this section, as circumstances warrant.

(4) EAP wardens

(A) Qualifications. The EAP warden shall receive training in the *emergency action plan* from the *fire safety/EAP director* in accordance with FC406.2.

(B) Duties and responsibilities. The EAP warden shall:

(*1*) be familiar with the *emergency action plan*, including general *sheltering in place*, *in-building relocation*, *partial evacuation* and *evacuation* procedures, the exit and *in-building relocation* routes to be utilized for the floor, the location of *in-building relocation areas* and *assembly areas*; and the means of communicating with the *fire safety/EAP director*;

(*2*) in the event of an *emergency* on the floor or immediately affecting *building occupants* on the floor, notify the *fire safety/EAP director* and *building occupants* on the floor of the *emergency*, and initiate appropriate action;

(*3*) in the event of an *emergency* not on the floor or not immediately affecting *building occupants* on the floor, establish communication with the *fire safety/EAP director* and, if possible, await direction from the *fire safety/EAP director*;

(*4*) keep the *fire safety/EAP director* informed of his or her location and the progress of the implementation of *emergency action plan* measures;

(*5*) confirm the *in-building relocation* or *evacuation* of the floor or portion thereof by directing deputy EAP wardens and/or other *EAP staff* designated as EAP searchers to search all areas of the floor to be relocated in building or evacuated; to do so by visual inspection, not merely by the lack of a voice response; and to notify any

remaining *building occupants* that they must immediately comply with the applicable *emergency action plan* procedures;

(*6*) determine whether the stairwells are safe to enter before directing *building occupants* to use them, and, if unsafe, notify the *fire safety/EAP director*, and to instruct *building occupants* not to use elevators unless and until the *fire safety/EAP director* authorizes their use; and

(*7*) perform such other duties as set forth in the *emergency action plan*, or as directed to do so by the *fire safety/EAP director*.

(5) Deputy EAP wardens

(A) Qualifications. The deputy EAP warden shall receive training in the *emergency action plan* from the *fire safety/EAP director* in accordance with FC406.2.

(B) Duties and responsibilities. The deputy EAP wardens shall:

(*1*) in the absence of the EAP warden, perform the duties of the EAP warden, as circumstances warrant; and

(*2*) in the presence of the EAP warden, assist the EAP warden in carrying out the requirements of the *emergency action plan* and this section, by searching all areas of the floor to be relocated in building or evacuated, and notifying any remaining *building occupants* that they must immediately comply with the applicable *emergency action plan* procedures, and by performing such other duties as assigned by the *emergency action plan* or directed by the EAP warden.

(6) EAP brigade

(A) Qualifications. All EAP brigade members shall receive training in the *emergency action plan* from the *fire safety/EAP director* in accordance with FC406.2.

(B) Duties and responsibilities. Members of the EAP brigade shall:

(*1*) perform their designated assignments, as set forth in the *emergency action plan* or as directed by the *fire safety/EAP director*; and

(*2*) in the event of an *emergency*, immediately report to the designated locations, as set forth in the *emergency action plan* or directed by

the *fire safety/EAP director*, to be ready to undertake their designated assignments.

(7) Critical Operations Staff

(A) Qualifications. All *critical operations staff* shall receive training in the *emergency action plan* from the *fire safety/EAP director* in accordance with R404-02(h)(1)(B)(*3*). Such training shall be for the same duration and frequency as required for EAP brigade members pursuant to FC406.2.

(B) Duties and responsibilities. *Critical operations staff* shall:

(*1*) perform their designated assignments, as set forth in the *emergency action plan* or as directed by the *fire safety/EAP director*; and

(*2*) in the event of an *emergency*, immediately report to their designated locations, as set forth in the *emergency action plan* or directed by the *fire safety/EAP director*, and undertake their designated assignments.

(8) EAP Searchers

(A) Qualifications. All EAP searchers shall receive training in the *emergency action plan* from the *fire safety/EAP director* in accordance with R404-02(h)(1)(B)(*3*). Such training shall be for the same duration and frequency as required for EAP brigade members pursuant to FC406.2.

(B) Duties and responsibilities. EAP searchers shall:

(*1*) in the absence of the deputy EAP warden, perform the duties of the deputy EAP deputy warden; and

(*2*) in the presence of the EAP warden, assist the EAP warden in carrying out the requirements of the *emergency action plan* and this section, by searching all areas of the floor to be relocated in building or evacuated, notifying any remaining *building occupants* that they must immediately comply with the applicable *emergency action plan* procedures, and performing such other duties as assigned by the *emergency action plan* or directed by the EAP warden.

(9) Identification. Upon implementation of the e*mergency action plan* or during *EAP drills*, the *fire safety/EAP director* and all *EAP staff* shall identify themselves to *building occupants* and others by donning a vest, armband or other form of identification indicating their role.

(i) Consultation With Neighboring Buildings

(1) Prior to filing an *emergency action plan* for a building, the *owner* shall consult with the *owners* of all *neighboring buildings* with respect to the terms of the proposed *emergency action plan* as it affects such *neighboring buildings*. Such consultations shall include but not be limited to designation of *evacuation* routes and *assembly areas*, and coordination and notification of *EAP drills* involving *evacuation* of *building occupants*.

(2) Such consultations, and any agreements reached as a result, shall be documented in written form, and shall be made available for inspection by *Department* representatives, upon request.

(3) The *owner* of a building shall be deemed to have satisfied the requirements of this section notwithstanding the lack of cooperation on the part of the *owners* of *neighboring buildings*, if the *owner* makes reasonable efforts to engage in such consultations, and documents such efforts.

(j) Submission and Acceptance of Emergency Action Plan

(1) Time for submission.

(A) An *owner* of a building for which a certificate of occupancy or temporary certificate of occupancy has been issued by the *Department of Buildings* prior to April 6, 2006, or which is otherwise occupied before such date, shall submit to the *Department* an *emergency action plan* for such building by December 31, 2006, for all buildings not in any of the preceding categories.

(B) An *owner* of a building constructed or occupied on or after April 6, 2006, shall submit to the *Department* an *emergency action plan* for such building at the same time as the *fire safety and evacuation plan* required pursuant to FC404.2.1 is submitted to the *Department*.

(2) Department review and acceptance. *Emergency action plans* shall be filed for Department review and acceptance in the accordance with the standards, requirements and procedures set forth in R404-01(p) with respect to *fire safety and evacuation plans*.

(3) Plan review fee. Original *emergency action plans* filed for *Department* review and acceptance shall be accompanied by the plan review fee set forth in FC Appendix A. Applicants filing amended plans will be billed the plan review fee set forth in FC Appendix A.

(4) Time for implementation. Within 30 days from the date of *Department* acceptance of the *emergency action plan*, an *owner* shall have in place trained

FSP staff and otherwise be capable of implementing the *emergency action plan* at the *premises* and otherwise complying with the requirements of this section.

(k) Periodic Review and Amendment. The *owner* shall cause a building's *emergency action plan* to be reviewed and amended in accordance with the standards, requirements and procedures set forth in R404-01(q) with respect to *fire safety and evacuation plans*.

(l) Emergency Action Plan Education and Drills

(1) Distribution of emergency action plan. The *owner* shall provide a copy of the *emergency action plan* for the building, and any amended *emergency action plan*, to each employer of a *building occupant* within the time set forth for implementation of the *emergency action plan* set forth in R404-02(j)(4). The *owner* may delete from the *emergency action plan* distributed to such employers the floor plans, building information card or any other information that would compromise building security or personal safety. Thereafter, the *owner* shall provide a copy of the *emergency action plan* to each new employer prior to its employees occupying the building.

(2) Distribution of educational materials to building occupants. The *owner* shall provide to each employer of *building occupants*, for distribution to all *building occupants*, educational materials approved by the *fire safety/EAP director* explaining the *emergency action plan*.

(3) EAP drills

(A) The *owner* shall conduct *EAP drills* on a regular basis, during *regular business hours*, in accordance with this section, to familiarize all *building occupants* with the procedures for *evacuation*, *partial evacuation*, *in-building relocation* and *sheltering in place*, and the reasons for implementing each type of action.

(B) Types, scope and frequency of EAP drills

(*1*) Types. *EAP drills* shall consist either of instruction or stairwell familiarization, as follows:

(*a*) Instructional drills. Such drills shall serve to familiarize *building occupants* with the requirements and procedures of the *emergency action plan* by means of informational sessions approved by the *fire safety/EAP director*. Such sessions shall address implementation of the *emergency action plan* both during *regular business hours*, and at other times, when EAP wardens and other *EAP staff* may be absent from the building. Such sessions may be conducted by any qualified person, at any appropriate

location, including but not limited to stairwell entrances or *in-building relocation areas*.

(*b*) Stairwell familiarization drills. Such drills shall serve to familiarize *building occupants* with the process of *in-building relocation* or building evacuation via building stairwells. A stairwell familiarization drill shall require *building occupants*, other than *building occupants* who request and are granted exemption pursuant to R404-02(n)(1)(C), to enter a building stairwell and be escorted down at least four (4) floors of stairs (or to ground level, if below the fifth floor), during which time stairwell safety features and safe *evacuation* procedures shall be reviewed.

(*2*) Scope. *EAP drills* (involving instruction or stairwell familiarization) may be conducted by individual floor or groups of floors, or building-wide.

(*3*) Frequency. *EAP drills* shall be conducted on a regular basis, as follows:

(*a*) At least two (2) *EAP drills* shall be conducted within one (1) year of the date of *Department* acceptance of the building's initial *emergency action plan*, the first of which shall be conducted within six (6) months of such date of acceptance. At least one (1) of these initial *EAP drills* shall involve stairwell familiarization.

(*b*) Beginning one (1) year from the date of *Department* acceptance of the building's initial *emergency action plan*, an *EAP drill* shall be conducted on each floor of the building at least once a year. An *EAP drill* involving stairwell familiarization, and an *EAP drill* in which all floors participate simultaneously, shall be conducted at least once every three (3) years.

(*4*) Participation. All *building occupants* present on the affected floors at the time the *EAP drill* is conducted, including visitors, shall be required to participate in such drill.

(C) *EAP drills* shall be conducted separately from *fire drills* required for the building pursuant to FC405, and shall highlight the differences between the building's *fire safety and evacuation plan* and *emergency action plan*, and the appropriate actions to be taken by *building occupants* upon implementation of each plan.

(4) Full building evacuation drills

(A) Except as otherwise provided in this paragraph, full building *evacuation* drills, in which all *building occupants* evacuate the building, are not required. Any *owner* wishing to undertake a full building *evacuation* drill shall:

(*1*) notify the Field Public Communications Unit of the *Bureau of Fire Prevention* not less than 72 hours in advance of any full building *evacuation* drill;

(*2*) notify the *owners* of *neighboring buildings* not less than 72 hours in advance of any full building *evacuation* drill. The *owner* of a *neighboring building*, upon receipt of such a notification, shall notify the occupants of such *neighboring building* of the drill, to prevent the *evacuation* from causing alarm; and

(*3*) provide not less than 72 hours advance notification to the New York City Police Department and New York City Department of Transportation of any full building *evacuation* drill, and make any necessary arrangements with such agencies for such drill.

(B) The *Department* may direct a building to conduct a full building *evacuation* drill should it determine that there is a need to evaluate the adequacy of the building's *emergency action plan* or its compliance with the requirements of the plan or of this section.

(5) The obligations of *owners* of buildings and employers of *building occupants* pursuant to this subdivision shall not be construed to apply to *building occupants* who are visitors in the building, except that visitors shall be required to participate in any *EAP drill* being conducted at the time of their visit.

(m) EAP Logbook

(1) An *EAP* logbook shall be maintained at the building's *fire command center* for purposes of recording all *EAP*-related events, staffing and educational and training matters. The *EAP* logbook may be consolidated with the recordkeeping required pursuant to FC405.5 and R404-01(s) with respect to fires and other incidents, implementation of the *fire safety and evacuation plan*, conduct of *fire drills*, and training of *FSP staff*.

(2) The *EAP* logbook shall be a bound journal with consecutively numbered pages, unless the *Department* has authorized or *approved* an alternative form of electronic recordkeeping.

(3) A record shall be maintained in the *EAP* logbook of all training provided to *EAP staff* and *building occupants*, including *EAP drills*.

(A) Entries for *EAP*-related events shall include:

(*1*) any implementation of the *emergency action plan*; and

(*2*) any *emergency action plan*-related notifications to the *Department* or other agencies.

(*3*) *EAP staff* changes, *EAP* on-site examinations, *EAP* amendments and *EAP* acceptance by the *Department*.

(4) Availability of *EAP staff* members during *regular business hours*.

(B) Entries for *EAP staff* training sessions conducted shall include:

(*1*) the date of training session;

(*2*) the person(s) conducting the training session;

(*3*) the persons attending the training session; and

(*4*) the type of training session conducted (live or computerized instruction).

(C) Entries for *EAP drills* shall include:

(*1*) the date and time of drill;

(*2*) the person(s) conducting the drill;

(*3*) the date and time that required notifications (to *Department* and other agencies) were made, and persons receiving such notifications;

(*4*) the *EAP staff* members participating in the drill;

(*5*) the type of drill conducted (stairway familiarization, or instructional (live or computerized instruction));

(*6*) identification of the floors and the number of *building occupants* participating in drill;

(*7*) the *emergency* scenario simulated;

(*8*) the special needs addressed;

(*9*) the problems encountered; and

(*10*) for a *partial evacuation* or *evacuation*, the weather conditions and time required to accomplish complete *evacuation*.

(D) The *EAP* logbook shall be kept at the *premises* for a period of five (5) years, and made available for inspection by *Department* representatives upon request.

(n) Obligations of Building Occupants and Employers of Building Occupants

(1) Building occupants. All *building occupants*:

(A) shall comply with the directions of the *fire safety/EAP director* and *EAP staff* upon an announcement that the *emergency action plan* has been implemented, including any *shelter in place*, *in-building relocation*, *partial evacuation* or *evacuation* directed by the *fire safety/EAP director*;

(B) shall familiarize themselves with the requirements of the *emergency action plan*, and cooperate with and participate in *EAP drills*;

(C) shall request an exemption from the *fire safety/EAP director* if participation in a *EAP drill* involving stairwell familiarization, *in-building relocation*, *partial evacuation* or *evacuation* would cause injury or serious hardship; and

(D) are encouraged to identify themselves in accordance with the procedures of the *emergency action plan* if they would require assistance in the event of an *in-building relocation*, *partial evacuation* or *evacuation*.

(2) Employers of building occupants. All employers of *building occupants* shall:

(A) promptly distribute to *building occupants* who are their employees the educational materials regarding the *emergency action plan* provided to the employer by the *owner*;

(B) comply with the requirements of the *emergency action plan* and R404-02(n)(1), and instruct their employees who are *building occupants* to do so;

(C) assign or allow responsible employees to serve as EAP wardens, deputy EAP wardens and members of the EAP brigade, and require such employees to conscientiously perform their duties under the *emergency action plan*;

(D) establish and maintain a system of assigning responsibility for accounting for employees present in the building so that an accounting can be made in the event of an *in-building relocation*, *partial evacuation* or *evacuation*; and

(E) identify any office employees performing a public safety function or essential service for the employer in which there is a compelling public interest in maintaining even in the event of an emergency and request that they be designated as *critical operations staff* for purposes of the *emergency action plan*.

§404-03 Fire Safety Requirements for Sidewalk Cafes and Similar Public Gathering Places

(a) Scope. This section sets forth fire safety requirements for the design, installation, operation and maintenance of sidewalk cafes and similar public gathering places.

(b) General Provisions

(1) Applicability. The fire safety requirements of this section shall apply to sidewalk cafés and similar gathering places in courtyards, plazas, rooftops and other locations generally accessible to the public or *building occupants* (excluding locations intended for the private use of occupants of dwelling units).

(2) Compliance with Building Code and permit requirements. All sidewalk cafes and similar public gathering places shall be designed, installed, operated and maintained in compliance with the requirements of the *Building Code*, and, where required to obtain a permit from the *Department of Consumer Affairs* or other New York State or New York City agency, the laws, rules and regulations enforced by such agency.

(3) Submission of floor and elevation plans. Any sidewalk café or other similar public gathering place required to obtain a permit from the *Department of Consumer Affairs* or other New York State or New York City agency shall submit a copy of the approved floor and elevation diagrams or plans for such public gathering place to the *Department* prior to using or occupying such place.

(4) Portable fire extinguisher requirements.

(A) Any sidewalk café required to obtain a permit from the *Department of Consumer Affairs* shall provide at least one (1) portable fire extinguisher having a minimum 2-A rating, which shall be kept at a conspicuous, readily accessible location.

(B) Any sidewalk café storing, handling or using *portable space heaters* fueled by *piped natural gas* shall provide at least one (1) portable fire extinguisher having a minimum 2-A rating for each 2,500 square feet of café area, with at least one such portable fire extinguisher located within ten (10) feet of the entrance to the café.

(5) Portable space heaters fueled by piped natural gas. The storage, *handling* and use of *portable space heaters* fueled by *piped natural gas* shall:

(A) be authorized by a *permit* issued pursuant to FC105.6;

(B) be supervised by a *certificate of fitness* holder pursuant to FC313.5.2.6; and

(C) comply with Department of Buildings Technical Policy and Procedure Notice #2/07 (The Installation of Outdoor Natural Gas Fired Heaters in Unenclosed Sidewalk Cafes, issued on September 6, 2007).

(c) Access to Fire Department Connections and Fire Hydrants. Sidewalk cafes and similar public gathering places shall not be designed, installed, operated or maintained in a manner that obscures the location of, or impedes access to, Fire Department connections and fire hydrants. Visibility and access shall be maintained in accordance with FC 508.5.4 and 912.

(d) Maintenance of Means of Egress

(1) Awnings, canopies, decorations and umbrellas shall not be designed, installed, operated or maintained in any manner that obstructs or otherwise impedes access to, or use of, any *means of egress*, including any fire escape drop ladder or counterbalanced stair ladder.

(2) Decks and seating platforms shall not be designed, installed, operated or maintained in any manner that obstructs or otherwise impedes access to, or use of, any *means of egress*, including any fire escape drop ladder or counterbalanced stair ladder, except that a readily removable section of a deck or platform, conspicuously marked, may cover a cellar entrance if approved by the *Department of Buildings*.

(e) Flame-Resistance of Materials. Fabric awnings, canopies, decorations and umbrellas installed or used any sidewalk café or other similar public gathering place required to obtain a permit from the *Department of Consumer Affairs* or other New York State or New York City agency shall be treated to be flame-resistant or made of inherently non-combustible materials. An affidavit attesting to such *flame-retardant treatment* or inherently non-combustible material complying with the requirements of R805-01(d) shall be filed with the *Department* prior to the installation or use of such articles.

(f) Prevention of Accumulation of Combustible Waste. Decks and seating platforms shall be constructed to provide for a continuous unbroken and level floor without openings or cracks to prevent the accumulation of *combustible waste* in the area underneath the deck or platform. Combustible material shall not be stored under a deck or platform used for a sidewalk café or similar public gathering space.

§ 405-407 Reserved

§ 408-01 Residential Buildings With Non-Sequential or Non-Standard Floor Numbering

(a) Scope. This section sets forth standards, requirements and procedures for the identification and documentation of buildings classified in *Occupancy Group R-2* that are 150 feet or more in height and have non-sequential or non-standard floor numbering.

(b) General Provisions. *Owners* of buildings or parts thereof classified in *Occupancy Group R-2* that are 150 feet or more in height and have non-sequential or non-standard floor numbering shall prepare and electronically submit to the *Department* a building information card complying with the requirements of this section.

(c) Floor Numbering Building Information Card Requirements

(1) Form and content. The building information card shall be 11” x 17” in size, and shall contain a color-coded plot plan and elevation of the building detailing bordering streets, entrances, floor numbers, stairs, elevators, shafts, standpipes, and mechanical equipment room locations, in substantially the form set forth in Appendix B-2 of R404-01. The elevation diagram depicting the building shall be clearly marked with the designated floor number or letter for each floor above and below grade level. The building information card shall include in the bottom right hand portion of the card a statement indicating the non-sequential or non-standard nature of the floor numbering.

(2) Filing. The building information card shall be filed electronically with the *Department* in the following manner, or such other manner as may be prescribed by the *Department*:

(A) The building information card shall be in JPEG or other *approved* format.

(B) The building information card shall be uploaded to the *Department*’s website (www.nyc.gov/fdny) or other website designated by the *Department.*

(3) Time for submission

(A) The *owner* of a building for which a certificate of occupancy or temporary certificate of occupancy has been issued by the *Department of Buildings* prior to July 1, 2009, or which was otherwise occupied before such date, shall file a building information card with the *Department* by July 1, 2009.

(B) The *owner* of a building for which a certificate of occupancy or temporary certificate of occupancy has been issued by the *Department of Buildings* on or after July 1, 2009, or which is otherwise occupied after such date, shall file a building information card with the *Department* prior to occupancy of the building.

§ 408-02 Residential Fire Safety Guides and Notices

(a) Scope. This section sets forth standards, requirements and procedures for the preparation, posting and/or distribution of residential fire safety guides and notices required pursuant to FC408.9.

(b) General Provisions

(1) Applicability. This section applies to all buildings or parts thereof in Occupancy *Group R-2*, except:

(A) buildings or parts thereof subject to the provisions of FC404.2.1(8); and

(B) school and college dormitories, unless such dormitories are required to comply with this section pursuant to FC408.10.

(2) Fire safety guides. The *owner* of a building or part thereof subject to this section shall prepare a fire safety guide and distribute such guide to the occupants thereof in compliance with the requirements of FC408.9 and R408-02(c).

(3) Fire safety notices. The *owner* of a building or part thereof subject to this section shall prepare, post and maintain fire safety notices in compliance with the requirements of FC408.9 and R408-02(d).

(4) Access to dwelling units. Tenants and other occupants of dwelling units in buildings and parts thereof subject to this section shall allow the *owner* of such *premises* access to such dwelling unit, upon reasonable notice, for purposes of compliance with this section.

(c) Fire Safety Guide Requirements

(1) Purpose. The fire safety guide shall serve to inform occupants of the building, including building service employees, of the building's construction, *fire*

protection systems, *means of egress*, and evacuation and other procedures to be followed in the event of *fire* in the building.

(2) Form. A fire safety guide shall be:

(A) substantially similar in format to the sample fire safety guide annexed to this section as Appendix 1, and include all of the information contained in such sample fire safety guide;

(B) printed as a single-sided or double-sided document, stapled or bound, in full-page or booklet format, on paper not smaller than 8½ inches by 11 inches nor larger than 8½ inches by 14 inches in size;

(C) printed such that all text is clearly legible, using contrasting lettering and a type size not smaller than eleven (11) point Times New Roman or equivalent; and

(D) printed in English. The *owner* may print the fire safety guide in such other additional languages (including symbols) as the *owner* concludes would benefit building occupants.

(3) Content. The fire safety guide shall consist of two (2) sections: a building information section and a fire emergency information section. The fire emergency information section shall reproduce the entire text of that section as set forth in the sample fire safety guide annexed hereto as Appendix 1. The building information section shall be completed by the *owner* with the following information:

(A) The address of the premises. A separate fire safety guide shall be prepared for each building, except buildings that have common *means of egress*.

(B) The name and address of the *owner* of the building or the *owner*'s representative, unless the fire safety guide is prepared on a letterhead containing such information. For purposes of the fire safety guide, the *owner*'s representative shall be any person or company authorized by the *owner* to receive and respond to complaints, violations or questions regarding building fire safety.

(C) The number of floors in the building, above and below ground level.

(D) The year the building was constructed.

(E) Whether the building is of combustible or non-combustible construction. For purposes of the fire safety guide, all buildings, including non-residential buildings containing residential occupancies, shall be deemed to be of "combustible construction" unless:

(*1*) The current Certificate of Occupancy for the building issued by the *Department of Buildings* or a Letter of No Objection by same indicates that the building is of "non-combustible" construction or "fireproof" construction; or

(*2*) If there is no Certificate of Occupancy or Letter of No Objection for the building, a *registered design professional* has provided written certification that the building is of "non-combustible" construction within the meaning of the 1968 or 2008 *Building Code*, or "fireproof" construction within the meaning of the *Building Code* in effect prior to 1968.

(F) Whether the building is equipped with a *sprinkler system*, and if so, whether such *sprinkler system* protects the entire building or only certain areas, and, if only certain areas, specifying those areas (for example, "the compactor chute on each floor and the compactor room and boiler room in the basement").

(G) Whether the building is equipped with a *fire alarm system*, and if so:

(*1*) the general location of the *manual fire alarm boxes* of such system (for example, "by the main entrance of building and next to the stairwell at each end of the corridor on each floor"); and

(*2*) whether the *manual fire alarm boxes*, when activated, transmit an alarm to an *approved central station* that notifies the *Department*.

(H) Whether the building is equipped with a one-way voice communication system pursuant to *Building Code* Section 907.2.12.2 (Exception 3), or other public address system (apart from any intercom system), and if so, the location of the speakers.

(I) All *means of egress* from the building, and the general location and any identification number of such *means of egress*, including:

(*1*) unenclosed interior stairwells;

(*2*) enclosed interior stairwells;

(*3*) exterior stairwells;

(*4*) fire tower stairwells;

(*5*) fire escapes;

(*6*) all exits from the building (for example, "main entrance on first floor exiting onto 1st Avenue; service entrance from basement level exiting by ramp onto 5th Street; emergency exit (with alarm) from stairwell exiting on north side of building with access to 5th Street; rear entrance at basement level to rear yard with no access to street; emergency exit (with alarm) at top of stairwell to roof with no access to ground or adjoining buildings.");

(J) The date the fire safety guide was prepared; and

(K) Any other fire safety information or requirements (including lease provisions, house rules or other private building regulations) that the owner may wish to include, such as restrictions on storage or decoration. Any private building regulations shall be clearly identified as such.

(4) Accuracy of information. The *owner* of each building shall be responsible for the accuracy of the information contained in the building information section of the fire safety guide and for the accurate reproduction of the fire emergency section of such fire safety guide.

(5) Distribution. The fire safety guide shall be distributed as follows:

(A) To each dwelling unit in the building, or an occupant thereof, and to each building service employee:

(B) on an annual basis, by hand delivery or mailing a copy by first class mail, during Fire Prevention Week (observed during the month of October), or, if the fire safety guide is distributed together with the window guard notices required by New York City Administrative Code §17-123, at such time as the rules of the New York City Department of Health and Mental Hygiene require the annual distribution of such window guard notices to be made; and

(C) within 60 days of any material change in building conditions affecting the content of the fire safety guide, other than temporary repairs or maintenance work. Nothing contained herein shall be construed to relieve an *owner* of any residential building or part thereof of any duty to notify building occupants, the *Department* or other party that any *fire protection system* is not functional.

(D) To a new occupant, by providing a copy at the time the lease, sublease or other agreement allowing occupancy of the dwelling unit is presented to the occupant for signature, or, if there is no written agreement, not later than at the date the occupant assumes occupancy of the *premises*.

(E) To a new building service employee, by providing a copy to such employee not later than the date upon which the employee actually commences to perform duties at the *premises*.

(F) Each distribution of the fire safety guide shall be documented by a United States Postal Service certificate of mailing or other official proof of mailing, or, if hand delivered, by receipt signed by an occupant of the dwelling unit or the building service employee, or by sworn affidavit of the employee or agent of the *owner* who actually delivered the fire safety guide, identifying the date and manner of delivery and the dwelling units to which it was delivered or the names of the occupants who received it.

(6) Inspection. The *owner* shall make available for inspection upon request of any *Department* representative a copy of the last three (3) annual fire safety guides and proof of distribution.

(d) Fire Safety Notice Requirements

(1) Purpose. The fire safety notice shall serve to inform occupants of the building, including building service employees and visitors, as to the evacuation and other procedures to be followed in the event of *fire* in the building.

(2) Form. Each fire safety notice shall be:

(A) substantially similar in format to the sample fire safety notice annexed to this section as Appendix 2, and include all of the information contained in such sample fire safety notice;

(B) printed on a single-sided sheet of paper framed under a clear plexiglas cover or laminated with a firm backing and designed to be affixed by mounting hardware or an adhesive, or printed on a matte-finish vinyl adhesive-backed decal not less than three (3) mils in thickness, using thermalprinting, screenprinting or other permanent, water-resistant printing technique;

(C) 5½ inches by 8½ inches in size (excluding any frame), except that fire safety notices to be posted in the common area of the residential building or part thereof may be up to 8½ by 11 inches in size;

(D) printed such that all text is clearly legible, using contrasting lettering and a type size not smaller than ten (10) point Times New Roman or equivalent; and

(E) printed in the English language. The *owner* may print the fire safety notice in such other additional languages (including symbols) as the *owner*

concludes would benefit the building occupants. In such event, the fire safety notice may exceed 5½ inches by 8½ inches in size.

(3) Content. The fire safety notice shall reproduce the entire text of the sample fire notice annexed hereto as Appendix 2 that is applicable to the building, as follows:

(A) Noncombustible construction. The text of this notice shall be used for dwelling unit doors and common areas when the building is of noncombustible construction within the meaning set forth in R408-02(c)(3)(E).

(B) Combustible construction. The text of this notice shall be used for dwelling unit doors and common areas when the building is of combustible construction within the meaning set forth in R408-02(c)(3)(E).

(4) Accuracy of information. The *owner* of each residential building or part thereof subject to the requirements of this section shall be responsible for the accurate reproduction of the fire safety notices.

(5) Posting.

(A) Location. A fire safety notice shall be posted in each of the following locations:

(*1*) Dwelling unit door. On the inside surface of the front or main entrance door of each dwelling unit in the building.

(*2*) Common area. In a conspicuous location near any common mailbox area customarily used by building occupants, or if there is no common mailbox area, in a conspicuous location in or near the elevators or main stairwell.

(B) Method of posting. Each fire safety notice shall be securely affixed, by mounting hardware or an adhesive, to the door or wall such that no part of the fire safety notice (excluding any frame) is lower than four (4) feet from the floor, nor higher than five and a half (5½) feet from the floor.

(C) Posting of Building Information Section. A copy of Part I of the fire safety guide (the building information section) shall be posted with the fire safety notice in the common area. Such posting shall be in the same form as the fire safety notice.

(6) Maintenance and replacement. The *owner* shall maintain the fire safety notice in the common area and shall prepare and post any amended Part I (building information section) of the fire safety guide within sixty days of any material

change in building conditions requiring such amended fire safety guide. The *owner* shall replace any missing or damaged notice on the dwelling unit door prior to any lawful change in occupancy of the dwelling unit. The *owner* shall replace any missing or damaged notice at any other time upon written request of the tenant. The tenant may be charged the reasonable cost of replacement.

APPENDIX 1

FIRE SAFETY GUIDE
PART I -- BUILDING INFORMATION SECTION

BUILDING ADDRESS: _____

BUILDING OWNER/REPRESENTATIVE:

Name:
Address:
_____

Telephone: _____

BUILDING INFORMATION:

Year of Construction: _____

Type of Construction: ☐ Combustible ☐ Non-Combustible

Number of Floors: _____ Aboveground _____Belowground

Sprinkler System: ☐ Yes ☐ No

Sprinkler System Coverage: ☐ Entire Building ☐ Partial *(complete all that apply)*:

☐ Dwelling Units: _____
☐ Hallways: _____
☐ Stairwells: _____
☐ Compactor Chute: _____
☐ Other: _____

Fire Alarm: ☐ Yes ☐ Transmits Alarm to Fire Dept/Fire Alarm Co ☐ No

Location of Manual Pull Stations: _____
_____

Public Address System: ☐ Yes ☐ No

Location of Speakers: ☐ Stairwell ☐ Hallway ☐ Dwelling Unit ☐ Other: _____
_____

Means of Egress (e.g., Unenclosed/Enclosed Interior Stairs, Exterior Stairs, Fire Tower Stairs, Fire Escapes, Exits):

Type of Egress	Identification	Location	Leads to

Other Information: _____
_____

DATE PREPARED: _____

FIRE SAFETY GUIDE
PART II – FIRE EMERGENCY INFORMATION

BUILDING ADDRESS: _____

THIS FIRE SAFETY GUIDE IS INTENDED TO HELP YOU AND THE MEMBERS OF YOUR HOUSEHOLD PROTECT YOURSELVES IN THE EVENT OF FIRE. THIS FIRE SAFETY GUIDE CONTAINS:

- **Basic fire prevention and fire preparedness measures that will reduce the risk of fire and maximize your safety in the event of a fire.**
- **Basic information about your building, including the type of construction, the different ways of exiting the building, and the types of fire safety systems it may have.**
- **Emergency fire safety and evacuation instructions in the event of fire in your building.**

PLEASE TAKE THE TIME TO READ THIS FIRE SAFETY GUIDE AND TO DISCUSS IT WITH THE MEMBERS OF YOUR HOUSEHOLD. FIRE PREVENTION, PREPAREDNESS, AND AWARENESS CAN SAVE YOUR LIFE!

IN THE EVENT OF A FIRE,

CALL 911

OR THE FIRE DEPARTMENT DISPATCHER, AT

Manhattan	**(212) 999-2222**
Bronx	**(718) 999-3333**
Brooklyn	**(718) 999-4444**
Queens	**(718) 999-5555**
Staten Island	**(718) 999-6666**

OR TRANSMIT AN ALARM FROM THE NEAREST FIRE ALARM BOX

BASIC FIRE PREVENTION AND FIRE PREPAREDNESS MEASURES

These are fire safety tips that everybody should follow:

1. Every apartment should be equipped with at least one smoke detector. (All apartment buildings constructed after July 2009 are required to be equipped with multiple interconnected smoke alarms that sound throughout an apartment.) Check them periodically to make sure they work. Most smoke detectors can be tested by pressing the test button. Replace the batteries in the spring and fall when you move your clocks forward or back an hour, and whenever a smoke detector chirps to signal that its battery

is low. The smoke detector should be replaced on a regular basis in accordance with the manufacturer's recommendation, but at least once every ten years.

2. Carelessly handled or discarded cigarettes are the leading cause of fire deaths. Never smoke in bed or when you are drowsy, and be especially careful when smoking on a sofa. Be sure that you completely extinguish every cigarette in an ashtray that is deep and won't tip over. Never leave a lit or smoldering cigarette on furniture.

3. Matches and lighters can be deadly in the hands of children. Store them out of reach of children and teach them about the danger of fire.

4. Do not leave cooking unattended. Keep stove tops clean and free of items that can catch on fire. Before you go to bed, check your kitchen to ensure that your oven is off and any coffeepot or teapot is unplugged.

5. Never overload electrical outlets. Replace any electrical cord that is cracked or frayed. Never run extension cords under rugs. Use only power strips with circuit-breakers.

6. Keep all doorways and windows leading to fire escapes free of obstructions, and report to the owner any obstructions or accumulations of rubbish in the hallways, stairwells, fire escapes or other means of egress.

7. Install window gates only if it is absolutely necessary for security reasons. Install only approved window gates. Do not install window gates with key locks. A delay in finding or using the key could cost lives. Maintain the window gate's opening device so it operates smoothly. Familiarize yourself and the members of your household with the operation of the window gate.

8. Familiarize yourself and members of your household with the location of all stairwells, fire escapes and other means of egress.

9. With the members of your household, prepare an emergency escape route to use in the event of a fire in the building. Choose a meeting place a safe distance from your building where you should all meet in case you get separated during a fire.

10. Exercise care in the use and placement of fresh cut decorative greens, such as Christmas trees and holiday wreaths. If possible, keep them planted or in water. Do not place them in public hallways or where they might block egress from your apartment if they catch on fire. Keep them away from any flame, including fireplaces. Do not keep for extended period of time; as they dry, decorative greens become easily combustible.

BUILDING INFORMATION

Building Construction

In a fire emergency, the decision to leave or to stay in your apartment will depend in part on the type of building you are in.

Residential buildings built before 1968 are generally classified either as “fireproof” or “non-fireproof.” Residential buildings built in or after 1968 are generally classified either as “combustible” or “non-combustible.” The type of building construction generally depends on the size and height of the building.

A “non-combustible” or “fireproof” building is a building whose structural components (the supporting elements of the building, such as steel or reinforced concrete beams and floors) are constructed of materials that do not burn or are resistant to fire and therefore will not contribute to the spread of the fire. In such buildings, fires are more likely to be contained in the apartment or part thereof in which they start and less likely to spread inside the building walls to other apartments and floors. THIS DOES NOT MEAN THAT THE BUILDING IS IMMUNE TO FIRE. While the structural components of the building may not catch fire, all of the contents of the building (including furniture, carpeting, wood floors, decorations and personal belongings) may catch on fire and generate flame, heat and large amounts of smoke, which can travel throughout the building, especially if apartment or stairwell doors are left open.

A “combustible” or “non-fireproof” building has structural components (such as wood) that will burn if exposed to fire and can contribute to the spread of the fire. In such buildings, the fire can spread inside the building walls to other apartments and floors, in addition to the flame, heat and smoke that can be generated by the burning of the contents of the building.

Be sure to check Part I (Building Information Section) of this fire safety guide to see what type of building you are in.

Means of Egress

All residential buildings have at least one means of egress (way of exiting the building), and most have at least two. There are several different types of egress:

Interior Stairs: All buildings have stairs leading to the street level. These stairs may be enclosed or unenclosed. Unenclosed stairwells (stairs that are not separated from the hallways by walls and doors) do not prevent the spread of flame, heat and smoke. Since flame, heat and smoke generally rise, unenclosed stairwells may not ensure safe egress in the event of a fire on a lower floor. Enclosed stairs are more likely to permit safe egress from the building, if the doors are kept closed. It is important to get familiar with the means of egress available in your building.

Exterior Stairs: Some buildings provide access to the apartments by means of stairs and corridors that are outdoors. The fact that they are outdoors and do not trap heat and smoke enhances their safety in the event of a fire, provided that they are not obstructed.

Fire Tower Stairs: These are generally enclosed stairwells in a “tower” separated from the building by air shafts open to the outside. The open air shafts allow heat and smoke to escape from the building.

Fire Escapes: Many older buildings are equipped with a fire escape on the outside of the building, which is accessed through a window or balcony. Fire escapes are considered a “secondary” or alternative means of egress, and are to be used if the primary means of egress (stairwells) cannot be safely used to exit the building because they are obstructed by flame, heat or smoke.

Exits: Most buildings have more than one exit. In addition to the main entrance to the building, there may be separate side exits, rear exits, basement exits, roof exits and exits to the street from stairwells. Some of these exits may have alarms. Not all of these exits may lead to the street. Roof exits may or may not allow access to adjoining buildings.

Be sure to review Part I (Building Information Section) of this fire safety guide and familiarize yourself with the different means of egress from your building.

Fire Sprinkler Systems

A fire sprinkler system is a system of pipes and sprinkler heads that when triggered by the heat of a fire automatically discharges water that extinguishes the fire. The sprinkler system will continue to discharge water until it is turned off. When a sprinkler system activates, an alarm is sounded.

Sprinkler systems are very effective at preventing fire from spreading beyond the room in which it starts. However, the fire may still generate smoke, which can travel throughout the building.

Apartment buildings constructed before March 1999 were generally not required to have fire sprinkler systems. Some apartment buildings are equipped with sprinkler systems, but only in compactor chutes and rooms or boiler rooms. All apartment buildings constructed after March 1999 are required by law to be equipped with fire sprinkler systems throughout the building.

Be sure to review Part I (Building Information Section) of this fire safety guide to learn whether your building is equipped with fire sprinkler systems.

Interior Fire Alarm Systems

Although generally not required, some residential buildings are equipped with interior fire alarm systems that are designed to warn building occupants of a fire in the building. Interior fire alarm systems generally consist of a panel located in a lobby or basement, with manual pull stations located near the main entrance and by each stairwell door. Interior fire alarm systems are usually manually-activated (must be pulled by hand) and do not automatically transmit a signal to the Fire Department, so a telephone call must still be made to 911 or the Fire Department dispatcher. Do not assume that the Fire Department has been notified because you hear a fire alarm or smoke detector sounding in the building.

Be sure to review Part I (Building Information Section) of this fire safety guide to learn whether your building is equipped with an interior fire alarm system and whether the alarm is transmitted to the Fire Department, and familiarize yourself with the location of the manual pull stations and how to activate them in the event of a fire.

Public Address Systems

Although generally not required, some residential buildings are equipped with public address systems that enable voice communications from a central location, usually in the building lobby. Public address system are different from building intercoms, and usually consist of loudspeakers in building hallways and/or stairwells.

Starting in July 2009, residential buildings that are more than 125 feet in height are required by law to be equipped with a one way voice communication system that will enable Fire Department personnel to make announcements from the lobby to building occupants in their apartments or in building stairwells.

Be sure to review Part I (Building Information Section) of this fire safety guide to learn whether your building is equipped with a public address system.

EMERGENCY FIRE SAFETY AND EVACUATION INSTRUCTIONS

IN THE EVENT OF A FIRE, FOLLOW THE DIRECTIONS OF FIRE DEPARTMENT PERSONNEL. HOWEVER, THERE MAY BE EMERGENCY SITUATIONS IN WHICH YOU MAY BE REQUIRED TO DECIDE ON A COURSE OF ACTION TO PROTECT YOURSELF AND THE OTHER MEMBERS OF YOUR HOUSEHOLD.

THIS FIRE SAFETY GUIDE IS INTENDED TO ASSIST YOU IN SELECTING THE SAFEST COURSE OF ACTION IN SUCH AN EMERGENCY. PLEASE NOTE THAT NO FIRE SAFETY GUIDE CAN ACCOUNT FOR ALL OF THE POSSIBLE FACTORS AND CHANGING CONDITIONS; YOU WILL HAVE TO DECIDE FOR YOURSELF WHAT IS THE SAFEST COURSE OF ACTION UNDER THE CIRCUMSTANCES.

General Emergency Fire Safety Instructions

1. Stay calm. Do not panic. Notify the Fire Department as soon as possible. Firefighters will be on the scene of a fire within minutes of receiving an alarm.

2. Because flame, heat and smoke rise, generally a fire on a floor below your apartment presents a greater threat to your safety than a fire on a floor above your apartment.

3. Do not overestimate your ability to put out a fire. Most fires cannot be easily or safely extinguished. Do not attempt to put the fire out once it begins to quickly spread. If you attempt to put a fire out, make sure you have a clear path of retreat from the room.

4. If you decide to exit the building during a fire, close all doors as you exit to confine the fire. Never use the elevator. It could stop between floors or take you to where the fire is.

5. Heat, smoke and gases emitted by burning materials can quickly choke you. If you are caught in a heavy smoke condition, get down on the floor and crawl. Take short breaths, breathing through your nose.

6. If your clothes catch fire, don't run. Stop where you are, drop to the ground, cover your face with your hands to protect your face and lungs and roll over to smother the flames.

Evacuation Instructions If The Fire Is In Your Apartment (All Types of Building Construction)

1. Close the door to the room where the fire is, and leave the apartment.

2. Make sure EVERYONE leaves the apartment with you.

3. Take your keys.

4. Close, but do not lock, the apartment door.

5. Alert people on your floor by knocking on their doors on your way to the exit.

6. Use the nearest stairwell to exit the building.

7. DO NOT USE THE ELEVATOR.

8. Call 911 once you reach a safe location. Do not assume the fire has been reported unless firefighters are on the scene.

9. Meet the members of your household at a predetermined location outside the building. Notify responding firefighters if anyone is unaccounted for.

Evacuation Instructions If The Fire Is Not In Your Apartment

"NON-COMBUSTIBLE" OR "FIREPROOF" BUILDINGS:

1. Stay inside your apartment and listen for instructions from firefighters unless conditions become dangerous.

2. If you must exit your apartment, first feel the apartment door and doorknob for heat. If they are not hot, open the door slightly and check the hallway for smoke, heat or fire.

3. If you can safely exit your apartment, follow the instructions above for a fire in your apartment.

4. If you cannot safely exit your apartment or building, call 911 and tell them your address, floor, apartment number and the number of people in your apartment.

5. Seal the doors to your apartment with wet towels or sheets, and seal air ducts or other openings where smoke may enter.

6. Open windows a few inches at top and bottom unless flames and smoke are coming from below. Do not break any windows.

7. If conditions in the apartment appear life-threatening, open a window and wave a towel or sheet to attract the attention of firefighters.

8. If smoke conditions worsen before help arrives, get down on the floor and take short breaths through your nose. If possible, retreat to a balcony or terrace away from the source of the smoke, heat or fire.

"COMBUSTIBLE" OR "NON-FIREPROOF" BUILDING

1. Feel your apartment door and doorknob for heat. If they are not hot, open the door slightly and check the hallway for smoke, heat or fire.

2. Exit your apartment and building if you can safely do so, following the instructions above for a fire in your apartment.

3. If the hallway or stairwell is not safe because of smoke, heat or fire and you have access to a fire escape, use it to exit the building. Proceed cautiously on the fire escape and always carry or hold onto small children.

4. If you cannot use the stairs or fire escape, call 911 and tell them your address, floor, apartment number and the number of people in your apartment.

   A. Seal the doors to your apartment with wet towels or sheets, and seal air ducts or other openings where smoke may enter.

   B. Open windows a few inches at top and bottom unless flames and smoke are coming from below. Do not break any windows.

   C. If conditions in the apartment appear life-threatening, open a window and wave a towel or sheet to attract the attention of firefighters.

   D. If smoke conditions worsen before help arrives, get down on the floor and take short breaths through your nose. If possible, retreat to a balcony or terrace away from the source of the smoke, heat or fire.

APPENDIX 2

FIRE SAFETY NOTICES

The following fire safety notice shall be posted in buildings of non-combustible construction within the meaning of R408-02(c)(3)(E):

FIRE SAFETY NOTICE

IN THE EVENT OF FIRE, STAY CALM. NOTIFY THE FIRE DEPARTMENT AND FOLLOW THE DIRECTIONS OF FIRE DEPARTMENT PERSONNEL. IF YOU MUST TAKE IMMEDIATE ACTION, USE YOUR JUDGMENT AS TO THE SAFEST COURSE OF ACTION, GUIDED BY THE FOLLOWING INFORMATION:

YOU ARE IN A NON-COMBUSTIBLE (FIREPROOF) BUILDING

If The Fire Is In Your Apartment

- Close the door to the room where the fire is and leave the apartment**.**
- Make sure EVERYONE leaves the apartment with you.
- Take your keys.
- Close, but do not lock, the apartment door.
- Alert people on your floor by knocking on their doors on your way to the exit.
- Use the nearest stairwell to leave the building.
- DO NOT USE THE ELEVATOR.
- Call 911 once you reach a safe location. Do not assume the fire has been reported unless firefighters are on the scene.
- Meet the members of your household at a pre-determined location outside the building. Notify the firefighters if anyone is unaccounted for.

If The Fire Is Not In Your Apartment

- Stay inside your apartment and listen for instructions from firefighters unless conditions become dangerous.
- If you must exit your apartment, first feel the apartment door and doorknob for heat. If they are not hot, open the door slightly and check the hallway for smoke, heat or fire.
- If you can safely exit your apartment, follow the instructions above for a fire in your apartment.

- If you cannot safely exit your apartment or building, call 911 and tell them your address, floor, apartment number and the number of people in your apartment.

- Seal the doors to your apartment with wet towels or sheets, and seal air ducts or other openings where smoke may enter.

- Open windows a few inches at top and bottom unless flames and smoke are coming from below.

- Do not break any windows.

- If conditions in the apartment appear life-threatening, open a window and wave a towel or sheet to attract the attention of firefighters.

- If smoke conditions worsen before help arrives, get down on the floor and take short breaths through your nose. If possible, retreat to a balcony or terrace away from the source of the smoke, heat or fire.

The following fire safety notice shall be posted in buildings of combustible construction within the meaning of R408-02(c)(3)(E):

FIRE SAFETY NOTICE

IN THE EVENT OF FIRE, STAY CALM. NOTIFY THE FIRE DEPARTMENT AND FOLLOW THE DIRECTIONS OF FIRE DEPARTMENT PERSONNEL. IF YOU MUST TAKE IMMEDIATE ACTION, USE YOUR JUDGMENT AS TO THE SAFEST COURSE OF ACTION, GUIDED BY THE FOLLOWING INFORMATION:

YOU ARE IN A COMBUSTIBLE (NON-FIREPROOF) BUILDING

If The Fire Is In Your Apartment

- Close the door to the room where the fire is and leave the apartment.
- Make sure EVERYONE leaves the apartment with you.
- Take your keys.
- Close, but do not lock, the apartment door.
- Alert people on your floor by knocking on their doors on your way to the exit.
- Use the nearest stairwell to leave the building.
- DO NOT USE THE ELEVATOR.
- Call 911 once you reach a safe location. Do not assume the fire has been reported unless firefighters are on the scene.
- Meet the members of your household at a pre-determined location outside the building. Notify the firefighters if anyone is unaccounted for.

If The Fire Is Not In Your Apartment

- Feel your apartment door and doorknob for heat. If they are not hot, open the door slightly and check the hallway for smoke, heat or fire.
- Exit the apartment and building if you can safely do so, following the instructions above for a fire in your apartment.
- If the hallway or stairwell is not safe because of smoke, heat, or fire and you have access to a fire escape, use it to exit the building. Proceed cautiously on the fire escape and always carry or hold onto small children.
- If you cannot use the stairs or the fire escape, call 911 and tell them your address, floor, apartment number and the number of people in your apartment.

- Seal the doors to your apartment with wet towels or sheets, and seal air ducts or other openings where smoke may enter.

- Open windows a few inches at top and bottom unless flames and smoke are coming from below.

- Do not break any windows.

- If conditions in the apartment appear life-threatening, open a window and wave a towel or sheet to attract the attention of firefighters.

- If smoke conditions worsen before help arrives, get down on the floor and take short breaths through your nose. If possible, retreat to a balcony or terrace away from the source of the flames, heat or smoke.

CHAPTER 5
FIRE OPERATIONS FEATURES

§501-504	Reserved
§505-01	Apartment and Guest Room Identification and Directional Markings and Signs
§505-02	Apartment, Guest Room and Stairwell Fire Emergency Markings
§506-510	Reserved
§511-01	In-Building Auxiliary Radio Communication Systems
§512	Reserved

§ 501-504 Reserved

§ 505-01 Apartment and Guest Room Identification and Directional Markings and Signs

(a) Scope. This section sets forth standards and requirements for the design and placement of entrance door room number markings for dwelling units (apartments, guest rooms and sleeping rooms) in Group R-1 and Group R-2 buildings and occupancies, and lobby and hallway corridor directional signs, which serve to assist emergency response personnel in locating such dwelling units.

(b) General Provisions

(1) Applicability. The marking and sign provisions of FC505.3 and this section are operational and maintenance requirements. Pursuant to FC102.2, these requirements are applicable to all Group R-1 and Group R-2 buildings and occupancies subject to FC505.3, regardless of when such building or occupancy was constructed or established.

(2) Time for compliance. Pursuant to FC505.3.3, buildings and occupancies existing on May 31, 2016, shall be brought into compliance with the marking and sign requirements of FC505.3 and this section by March 30, 2017. Buildings and occupancies for which a certificate of occupancy or temporary certificate of occupancy is issued by the *Department of Buildings* on or after June 1, 2016, shall be compliant with such requirements prior to occupancy of the building or occupancy.

(3) Existing markings and signs. Any building or occupancy that has installed markings and signs prior to June 1, 2016, that vary from the requirements of FC505.3 and this section may retain such markings and signs, provided that such existing markings and signs are conspicuously and durably printed or posted, and communicate the same or substantially similar information required by this section. Any such existing marking or sign shall be replaced with a marking or

sign that complies with the requirements of this section whenever the existing marking or sign in the building or occupancy is repainted or replaced.

(4) Conformance with plans. Entrance door room number and directional markings and signs must be consistent with the room numbers reflected upon any emergency preparedness plan or other plan requiring room identification prepared and/or filed in accordance with applicable laws, rules and regulations.

(5) Tampering. Pursuant to FC107.4.2, it is unlawful for any person to remove, deface, obscure or otherwise render illegible any marking or sign required by FC505.3 and this section.

(c) Dwelling Unit Entrance Door Identification

(1) Where required. Pursuant to FC505.3, at least one (1) entrance door to each dwelling unit shall be marked or have a sign identifying the room number and/or letter as set forth in this section. Dwelling units having more than one (1) entrance door shall place the marking or sign on or adjacent to the *main entrance* door.

(2) Location. Pursuant to FC505.3, the entrance door marking or sign identifying the room number and/or letter shall be conspicuously and durably printed or posted on or adjacent to the entrance door, on the public corridor side of the door. The marking or sign letters and numbers shall be at least 48 inches, but not more than 60 inches, above the floor.

(3) Design. The entrance door markings and signs shall comply with the following design requirements:

(A) Letters and numbers shall be san serif, not less than one-half (½) inch in height, and shall use Arabic numerals and/or English alphabet capital letters.

(B) Character proportions and spacing, including stroke width, spacing between characters and line spacing, shall be in accordance with national and industry standards for building signage.

(C) Letters and numbers shall contrast with the background (whether of the door, the wall, or the sign) so as to be plainly discernible. Room number markings and signs may, but are not required to, include hyphens or other forms of punctuation.

(4) Method of Affixing. Room number markings and signs shall be durably affixed in compliance with the following requirements:

(A) Painted markings shall be selected and applied in accordance with the manufacturer's instructions.

(B) Adhesives used to affix room number signs shall be sufficiently durable to ensure an extended useful life of the sign.

(C) Signs affixed to fire doors or fire-rated walls using screws or nails shall not compromise the fire rating of the door or wall.

(d) Building Lobby and Hallway Corridor Directional Markings or Signs

(1) Where required. Pursuant to FC505.3, in a Group R-1 and Group R-2 building or occupancy with more than eight (8) dwelling units on a floor, a marking shall be placed or a sign posted in a conspicuous location in the elevator lobby or other public entry on each floor, and in the public corridor opposite each stairwell entrance, in accordance with R505-01(d)(2). The marking or sign shall identify by directional arrows and dwelling unit numbers and/or letters, the direction to each dwelling unit. Such markings or signs are not required in the public entry or opposite any stairwell entrance in any building or on any floor where the entrances to dwelling units are located in a single direction from such entry or stairwell entrance. For purposes of this section, a "single direction" means that all dwelling units are located along a single corridor. If dwelling units are located on more than one corridor, directional markings or signs shall be provided at each location where the corridor from the stairwell intersects with another corridor.

(2) Location. Pursuant to FC505.3, the directional markings and signs shall be conspicuously and durably printed or posted. The numbers, letters and directional arrows shall be at least 48 inches, but not more than 60 inches, above the floor. Stairwell directional markings or signs shall be located on the wall directly opposite the stairway entrance door. If there is no wall opposite such stairway entrance, or such location is not suitable for such purpose, the directional marking or sign shall be located at the nearest suitable location on the wall opposite the non-hinged side of the stairway entrance door.

(3) Design. The design of directional markings and signs shall be in accordance with R505-01(c)(3).

(4) Method of affixing. Directional markings and signs shall be affixed in accordance with R505-01(c)(4).

(e) Operational and Maintenance Requirements

(1) Maintenance required. Markings and signs required by FC505.3 and this section shall be maintained in good repair. Markings and signs that are found to be missing, defaced, obscured, illegible, damaged or loose shall be repaired or replaced.

(2) Initial compliance inspection. Owners of buildings and occupancies subject to FC505.3 shall have such buildings and occupancies inspected within the time for compliance set forth in R505-01(b)(2) to confirm that such building or occupancy's markings and signs conform to the requirements of this section.

(3) Periodic compliance inspection. Owners of buildings and occupancies subject to FC505.3 shall have such buildings and occupancies inspected at least once per year to verify that the markings and signs are in good repair, and repair or replace any markings that are not.

(f) Recordkeeping

(1) Compliance inspections. Records of the inspections required by R505-01(e)(2) and (3) shall be maintained in accordance with FC107.7. Dated entries shall be made with respect to the floors or other areas of the building or occupancy that have been inspected, the printed name and signature of the person who performed the inspection, and the markings or signs that require repair or replacement. Dated entries shall be made when such markings or signs are repaired and/or replaced.

(2) Existing markings and signs. A written record shall be made prior to March 30, 2017, of existing markings and signs retained in accordance with R505-01(b)(3). Such record shall be maintained for so long as the existing markings and signs are retained.

§ 505-02 Apartment, Guest Room and Stairwell Fire Emergency Markings

(a) Scope. This section sets forth standards and requirements for the design and placement of entrance door fire emergency markings for dwelling units (apartments, guest rooms and sleeping rooms) in Group R-1 and Group R-2 buildings or occupancies, and stairwell doors, which serve to assist firefighters in locating such dwelling units and stairwells and in identifying *multi-floor dwelling units*.

(b) Definition. The following term shall, for purposes of this section, have the meaning shown herein:

Main entrance. The *main entrance* is the primary means of entry to and egress from the dwelling unit. Such *main entrance* typically opens into an area that affords unimpeded access to the rooms and corridors of the dwelling unit.

(c) General Provisions

(1) Applicability. The fire emergency marking provisions of FC505.4 and this section are operational and maintenance requirements. Pursuant to FC102.2, these requirements are applicable to all Group R-1 and Group R-2 buildings and occupancies subject to FC505.4, regardless of when such building or occupancy was constructed or established.

(2) Time for compliance. Pursuant to FC505.4.5, buildings and occupancies existing on May 31, 2016, shall be brought into compliance with the marking requirements of FC505.4 and this section by March 30, 2018, except that buildings and occupancies shall be brought into compliance with *multi-floor dwelling unit* fire emergency markings by March 30, 2017. Buildings and occupancies for which a certificate of occupancy or temporary certificate of occupancy on or after June 1. 2016, shall be compliant with such requirements prior to occupancy of the building or occupancy.

(3) Existing markings. Any building or occupancy that has installed *multi-floor dwelling unit* fire emergency markings prior to June 1, 2016, that vary from the requirements of FC505.4 and this section may retain such markings, provided that such existing markings are conspicuously and durably printed or posted, communicate the same or substantially similar information required by this section, and are constructed of photoluminescent, retroreflective or other approved material. Any such existing marking shall be replaced with a marking that complies with the requirements of this section when the existing marking in the building or occupancy is replaced.

(4) Conformance with plans. Entrance door room number fire emergency markings shall be consistent with the room numbers reflected upon any emergency preparedness plan or other plan requiring room identification prepared and/or filed in accordance with applicable laws, rules and regulations.

(5) Tampering. Pursuant to FC107.4.2, it shall be unlawful for any person to remove, deface, obscure or otherwise render illegible any fire emergency marking required by FC505.4 and this section.

(d) Apartment and Guest Room Identification

(1) Where required. Each entrance door to each dwelling unit in a Group R-1 or R-2 building or occupancy shall be provided with fire emergency markings identifying the room number and/or letter as set forth in this section, R505-02(d). This requirement does not apply to:

(A) buildings and occupancies with eight (8) or fewer dwelling units on a floor;

(B) buildings protected throughout by a *sprinkler system*; or

(C) an occupancy within a building if the building is protected throughout by a *sprinkler system*,

provided, however, that compliance with fire emergency marking requirements is required for any *multi-floor dwelling units* within such buildings and occupancies.

Historically, Group R-1 buildings and occupancies have been required by the *Building Code* to be protected throughout by a *sprinkler system*. To the extent that a hotel or other Group R-1 building or occupancy is lawfully occupied without sprinkler protection, such buildings and occupancies shall comply with the provisions of R505-02(d).

(2) Location. Entrance door fire emergency markings shall be placed on the public corridor side of dwelling unit entrance doors, as follows:

(A) The markings shall be affixed to the door jamb on the hinged side of the door. See Appendix E.

(B) The fire emergency marking letters and/or numbers shall not be more than 12 inches above the floor. The uppermost character or symbol shall be positioned with its top edge at 12 inches above the floor with the remaining characters and symbols placed below.

(3) Multiple entrances. When a dwelling unit has more than one (1) entrance door, the markings for the *main entrance* door shall be distinct from secondary entrance doors, as set forth in R505-02(d)(3)(A) and (B).

(A) Star and triangle symbols

(1) The *main entrance* door to a dwelling unit shall be marked by placing a symbol of a star immediately above the room identification number required by R505-02(d)(1). See Appendix A, Figure A2.

(2) Each secondary entrance door to a dwelling unit shall be marked by placing a symbol of a triangle immediately above the room identification number required by R505-02(d)(1). See Appendix A, Figure A2.

(3) A single *main entrance* shall be designated for a *multi-floor dwelling unit* and marked with a star symbol. All other entrances, including the entrance that may serve as the primary means of entry to the dwelling unit on a floor other than the floor upon which the *main entrance* is located, shall be marked as secondary entrances using the triangle symbol.

(B) Numbering. Where a single dwelling unit has different entrance door room numbers on a single floor, the entrance door room number of the *main entrance* (or the primary means of entry on the floor for a *multi-floor dwelling unit*) shall be used on the fire emergency marking on each entrance door. This shall be in addition to the star or triangle marking.

(C) Adjoining guest room doors. Guest rooms in Group R-1 hotels and motels that have doors designed to allow two (2) or more adjoining guest rooms to be combined from time to time shall be treated as separate rooms for purposes of compliance with the fire emergency marking requirements of this section.

(4) Design. The entrance door fire emergency marking shall comply with the following design requirements:

(A) Letters and numbers shall be san serif, not less than three-quarters (¾) inch in height, and shall use Arabic numerals and/or English alphabet capital letters.

(B) Character proportions, including stroke width, character height and character width shall be in accordance with national and industry standards for building signage.

(C) Spacing between characters shall be not less than one-eighth (1/8) inch and not more than four (4) times the character stroke width.

(D) The dwelling unit number and/or letter designation shall be displayed vertically, arranged sequentially from top to bottom. See Appendix A, Figure A1. Entrance door fire emergency markings shall not include hyphens or other forms of punctuation.

(E) The markings shall contrast with the background against which the characters or symbols are viewed (whether it be the background color of the marking or, if the marking has no background color, the color of the door jamb itself) so as to be plainly discernible, and shall be of photoluminescent, retroreflective or other approved material, durable, water-resistant and securely affixed. If photoluminescent markings are used, such materials shall comply with the requirements of the *Building Code* for photoluminescent exit path markings, except that the photoluminescent markings used to comply with the provisions of this section do not require *Department of Buildings* approval.

(F) The design of the markings, including the type of material and the typeface, size and color of the markings, shall be consistent throughout the building.

(5) Method of affixing. Fire emergency markings shall be durably affixed in compliance with the following requirements:

(A) Adhesives used to affix fire emergency markings shall be sufficiently durable to ensure an extended useful life of the marking.

(B) Markings affixed to fire doors or fire-rated walls using screws or nails shall not compromise the fire rating of the door or wall.

(6) Directional arrows. *Multi-floor dwelling units* shall additionally be marked with directional arrows and other symbols in accordance with R505-02(e).

(e) Multi-Floor Dwelling Unit Directional Arrows and Symbols

(1) Directional arrows. Pursuant to FC505.4.1, each entrance door to a *multi-floor dwelling unit* that opens to a public corridor or other means of egress shall be marked on the public corridor side of the door by one or more upward or downward-pointing arrows indicating the direction(s) of the other floor(s) to which the *multi-floor dwelling unit* is connected, and the room number and/or letter of entrances on such floors (upper floor entrance room numbers/letters above the directional arrow; lower floor entrance room numbers/letters below the directional arrow). Directional arrows shall be placed immediately below the room identification number required by R505-02(d). See Appendix B, Figures B1, B2 and B3.

(2) Sandwich-design apartments. A *multi-floor dwelling unit*, access to which is provided by means of an interior stair or passageway from another floor, which has no living space on the floor upon which the entrance door is located, shall be identified by a horizontal mark perpendicular to the directional arrow. See Appendix C, Figure C1.

(3) Design. The design of the *multi-floor dwelling unit* markings shall conform to the requirements of R505-02(d)(4), except that the minimum size of the markings shall not be less than three (3) inches in height.

(f) Stairwell Identification

(1) Where required. Each stairwell door in any building subject to FC505.4.3 shall be identified as a stairwell door by placing the fire emergency marking required by R505-02(f) on the door jamb on the hinged side of the stairwell door in the public corridor. This requirement does not apply to:

(A) any building or occupancy with photoluminescent exit path markings on stairwell entrance doors in compliance with the requirements of the *Building Code;*

(B) any building protected throughout by a *sprinkler system*; and

(C) an occupancy within a building if the building is protected throughout by a *sprinkler system*

(2) Design. The stairwell door shall be marked with the word "EXIT" and the building stairwell letter designation to which the stairwell door provides access. The marking letters shall be displayed vertically, arranged sequentially from top to bottom, and shall comply with the standards and requirements set forth in R505-02(d)(4), as applicable. See Appendix D, Figure D1.

(3) Location and method of affixing. The location and method of affixing of the stairwell markings shall conform to the requirements of R505-02(d)(2) and (5).

(g) Operational and Maintenance Requirements

(1) Maintenance required. Markings required by FC505.4 and this section shall be maintained in good repair. Markings that are found to be missing, defaced, obscured, illegible, damaged or loose shall be repaired or replaced.

(2) Initial compliance inspection. Owners of buildings and occupancies subject to FC505.4 shall have such buildings and occupancies inspected within the time for compliance set forth in R505-02(c)(2) to confirm that such building or occupancy's markings conform to the requirements of this section.

(3) Periodic compliance inspection. Owners of buildings and occupancies subject to FC505.4 shall cause such buildings and occupancies to be inspected not less than annually to verify that the markings are in good repair and to repair or replace any markings that are not.

(h) Recordkeeping

(1) Compliance inspections. Records of the inspections required by R505-02(g)(2) and (3) shall be maintained in accordance with FC107.7. Dated entries shall be made with respect to the floors or other areas of the building or occupancy that have been inspected, the printed name and signature of the person who performed the inspection, and the markings that require repair or replacement. Dated entries shall be made when such markings are repaired and/or replaced.

(2) Existing markings. A written record shall be made prior to June 1, 2018 (June 1, 2017 for *multi-floor dwelling units*), of existing markings retained in accordance with R505-02(c)(3). Such record shall be maintained for so long as the existing markings are retained.

APPENDIX A

ENTRANCE DOOR FIRE EMERGENCY MARKINGS
IN GROUP R-1 AND GROUP R-2 BUILDINGS AND OCCUPANCIES
(EXCEPT MULTI-FLOOR DWELLING UNITS)

1. Dwelling units having only a single entrance door (except multi-floor dwelling units)

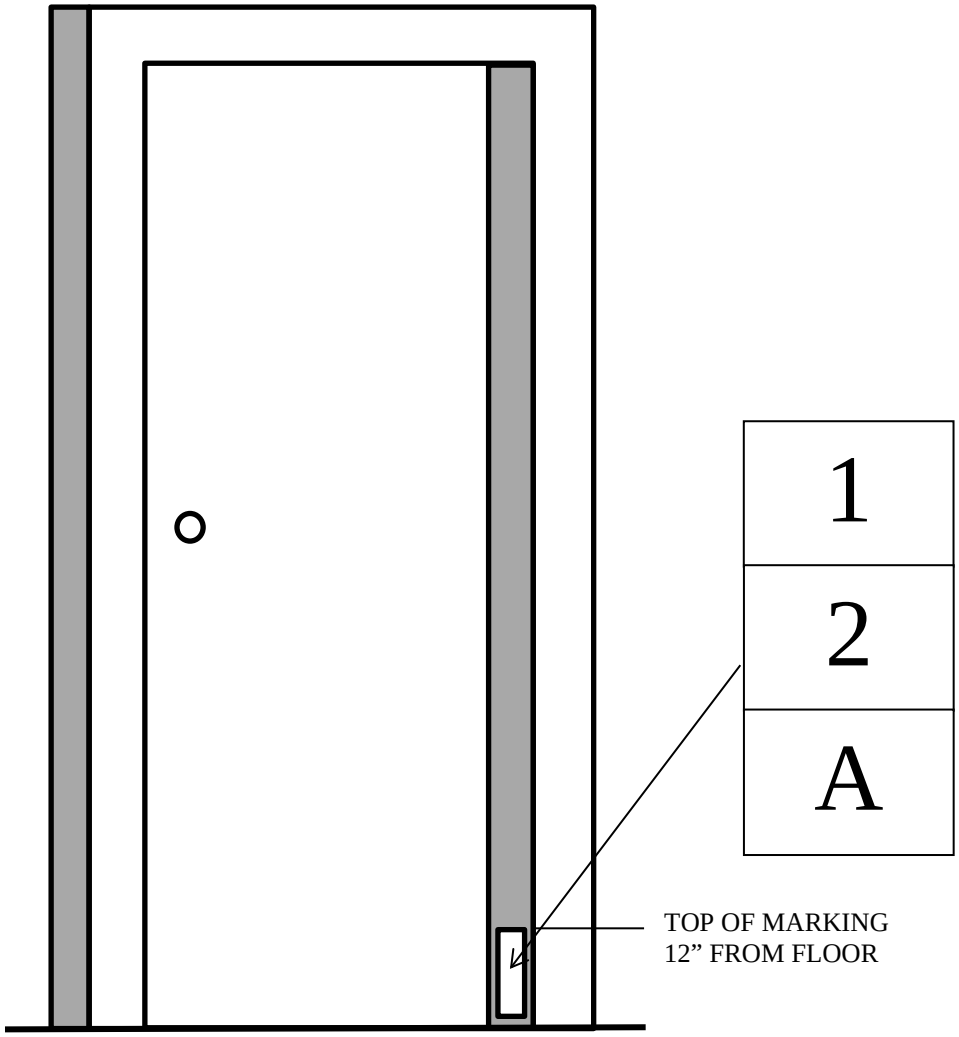

FIGURE A1

Figure A1 depicts the location and vertical configuration of the fire emergency marking for a dwelling unit designated as 12A and having a single entrance. Since the dwelling unit has only a single door, no star symbol (See Figure A2) is needed to distinguish it as the *main entrance* door.

2. Dwelling unit having more than one entrance door (except multi-floor dwelling units)

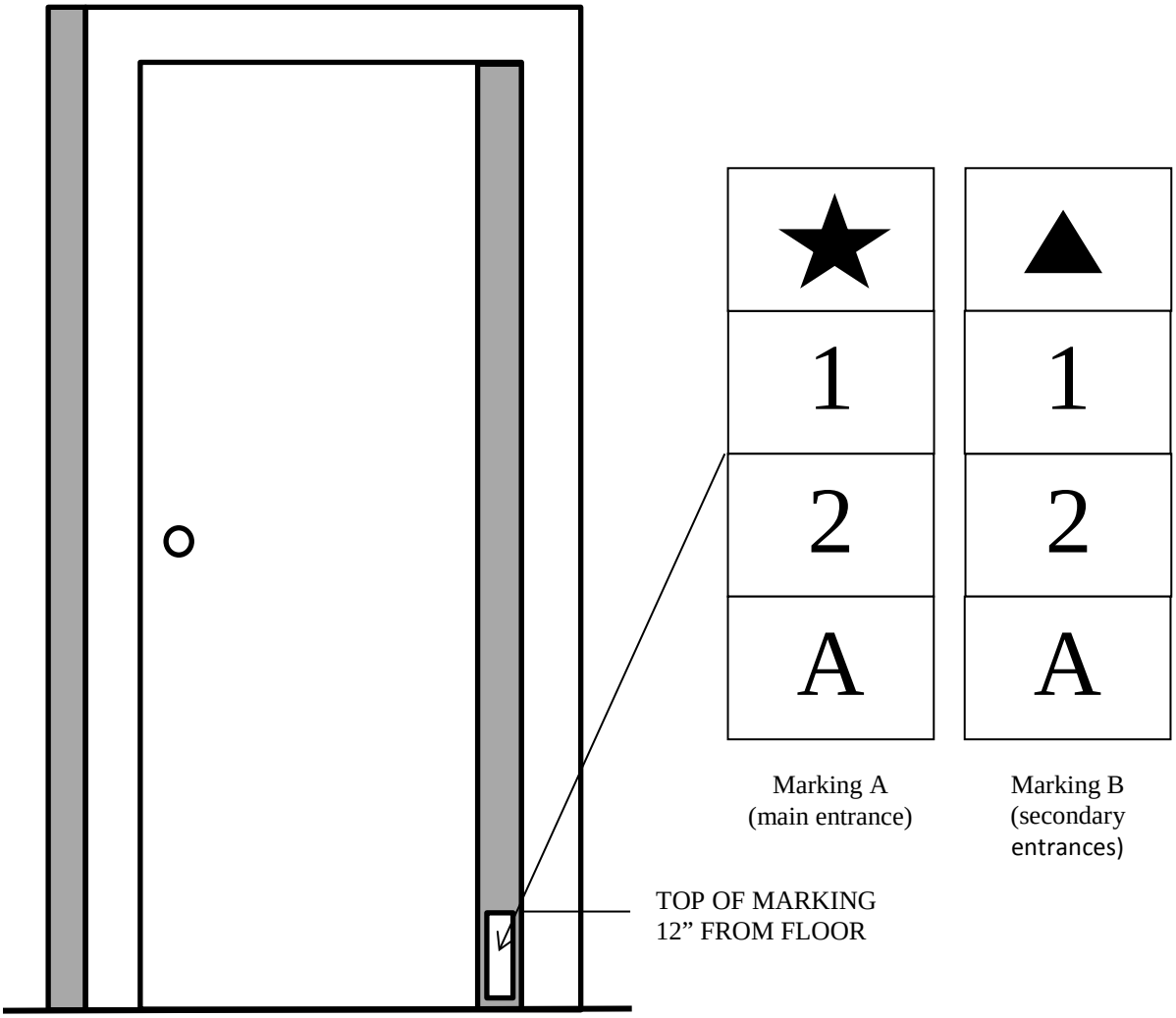

FIGURE A2

Figure A2 depicts the location, vertical configuration and star and triangle symbol of the fire emergency marking for a dwelling unit designated as 12A having more than one entrance door. Each entrance door is required to be marked separately.

The star and triangle symbols serve to distinguish the *main entrance* door from secondary entrance doors.

Marking A: The star symbol serves to identify the *main entrance* door to the dwelling unit.

Marking B: The triangle symbol serves to identify each secondary entrance to the dwelling unit.

APPENDIX B

ENTRANCE DOOR FIRE EMERGENCY MARKING FOR MULTI-FLOOR DWELLING UNITS IN A GROUP R-1 AND GROUP R-2 BUILDING OR OCCUPANCY

1. Entrance door to two-floor multi-floor dwelling units (except sandwich-design dwellings units) having a single entrance door.

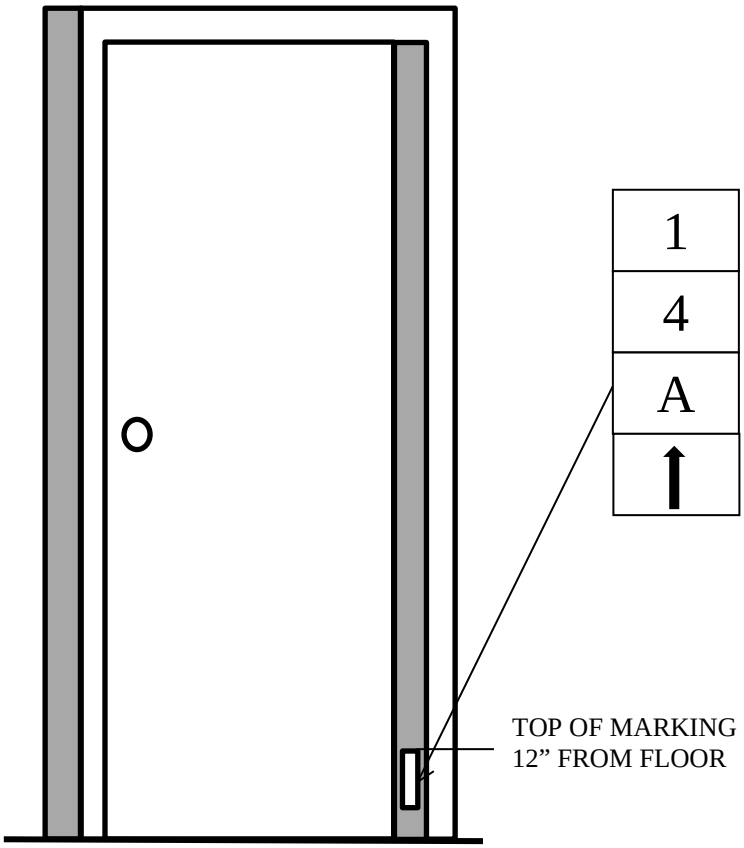

FIGURE B1

Figure B1 depicts the location, vertical configuration, arrow symbol and arrow directions for a two-floor *multi-floor dwelling unit* designated 14A, having a single entrance door. The upward-pointing arrow indicates that the dwelling unit is a *multi-floor dwelling unit* having living space on the entry floor and on the floor above this floor.

2. Entrance doors to multi-floor dwelling units (except sandwich-design dwelling units) having a single entrance door on each floor

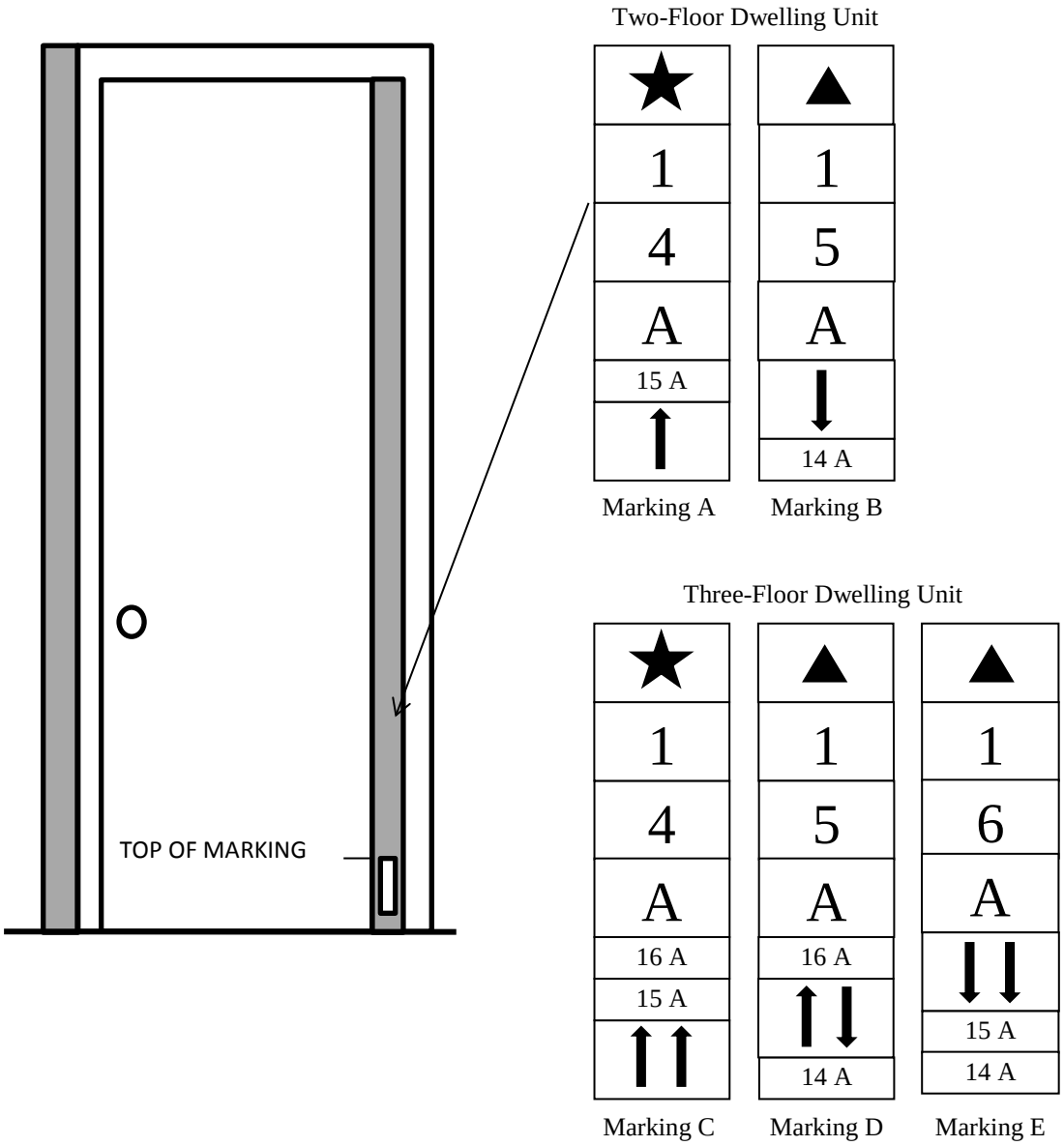

FIGURE B2

Figure B2, entrance door markings A and B, depict the location, vertical configuration, star and triangle symbols, arrow symbols and arrow directions for a two-floor *multi-floor dwelling unit* designated 14A on the lower floor and 15A on the upper floor. The room number associated with the dwelling unit entrance door on a floor above or below shall be indicated above or below the arrows, as indicated, irrespective of whether the room number designations on the other floors are the same or not. The star and triangle symbols serve to distinguish the *main entrance* door from secondary entrance doors.

Marking A: This marking identifies that the dwelling unit entrance door provides access to dwelling unit 14A, that it is the *main entrance*, and that it is a two-floor *multi-floor dwelling unit*. The living space for the dwelling unit is located on the entrance floor and the floor above the entrance door, as signified by the upward-pointing arrow. The horizontal "15A" marking signifies that the dwelling unit entrance door number of this unit on the upper floor is marked 15A.

Marking B: This marking identifies that the dwelling unit entrance door provides access to dwelling unit 15A, that it is a secondary entrance, and that it is a two-floor *multi-floor dwelling unit*. The living space for the dwelling unit is located on the entrance floor and the floor below the entrance door, as signified by the downward-pointing arrow. The horizontal "14A" marking signifies that the dwelling unit entrance door number of this unit on the lower floor is marked 14A.

Figure B2, entrance door markings C, D and E, depict the location, vertical configuration, star and triangle symbols, arrow symbols and arrow directions for a three-floor *multi-floor dwelling unit* designated 14A on the lower floor, 15A on the middle floor and 16A on the upper floor. The room number associated with the dwelling unit entrance door on a floor above or below is indicated above or below the arrows.

Marking C: This marking identifies that the dwelling unit entrance door provides access to dwelling unit 14A, that it is the *main entrance*, and that it is a three-floor *multi-floor dwelling unit*. The living space for the dwelling unit is located on the entrance floor and the two floors above the entrance door, as signified by the two upward-pointing arrows. The horizontal "15A" and "16A" markings signify that the entrance door to this dwelling unit on the middle floor is marked 15A and the entrance door to this dwelling unit on the upper floor is marked 16A.

Marking D: This marking identifies that the dwelling unit entrance door provides access to dwelling unit 15A, that it is a secondary entrance, and that it is a three-floor *multi-floor dwelling unit*. The living space for the dwelling unit is located on the entrance floor; the floor above the entrance door, as signified by the upward-pointing arrow; and the floor below the entrance door, as signified by the downward-pointing arrow. The horizontal markings "16A" and "14A" signify that the entrance door to this dwelling unit on the upper floor is marked 16A and the entrance door to this dwelling unit on the lower floor is marked 14A.

Marking E: This marking identifies that the dwelling unit entrance door provides access to dwelling unit 16A, that it is a secondary entrance, and that it is a three-story *multi-floor dwelling unit*. The living space for the dwelling unit is located on the entrance floor, and the two floors below the entrance door, as signified by the two downward-pointing arrows. The horizontal "15A" and "14A" markings signify that the entrance door to this dwelling unit on the middle floor is marked 15A and the entrance door to this dwelling unit on the lower floor is marked 14A.

3. Entrance doors to two-story multi-floor dwelling units (except sandwich-design dwellings units) having two entrance doors on one floor, and one on another floor.

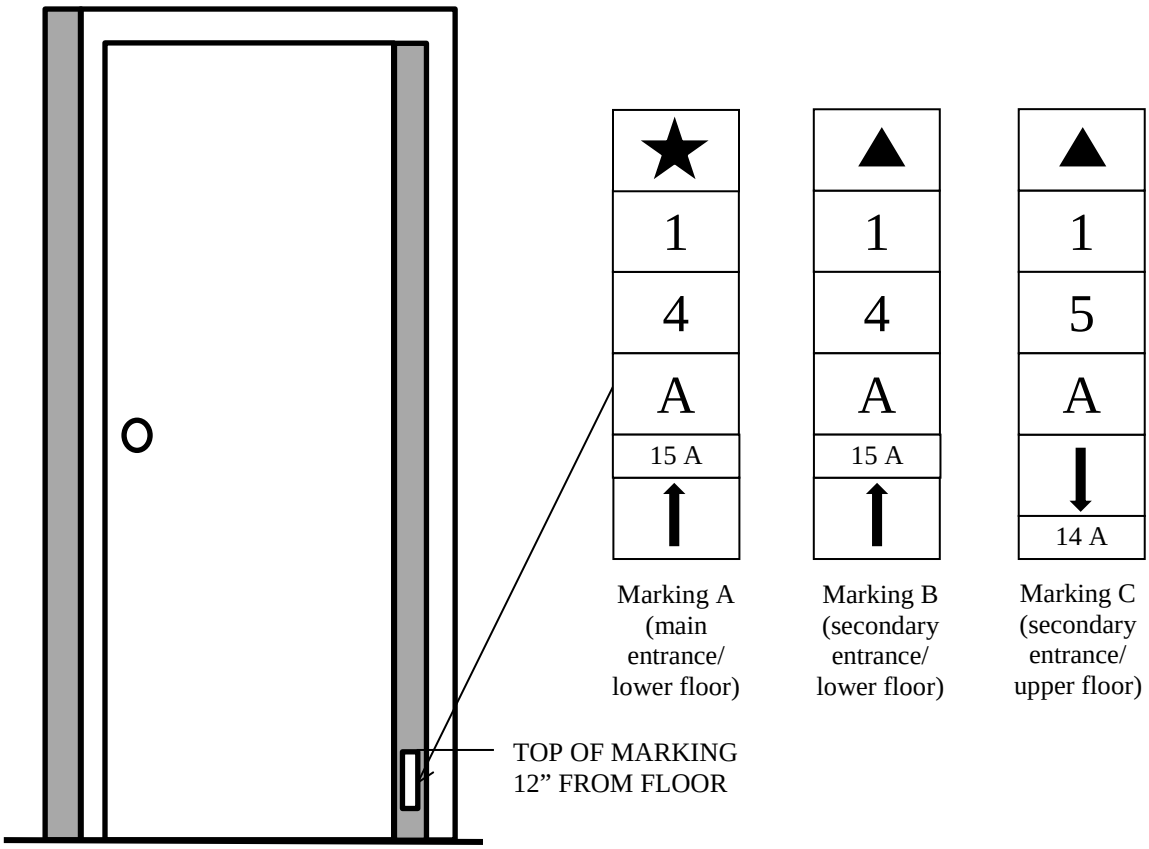

FIGURE B3

Figure B3 depicts the location, vertical configuration, star and triangle symbol, arrow symbol and arrow directions for a two-floor *multi-floor dwelling unit* designated 14A on the lower floor and 15A on the upper floor, having two entrance doors on the lower floor and one (1) entrance door on the upper floor.

Marking A: The star identifies this entrance as the *main entrance* providing access to dwelling unit 14A. The upward-pointing arrow indicates that the dwelling unit is a *multi-floor dwelling unit* having living space on the entry floor and one floor above this floor. The horizontal "15A" marking signifies that the entrance door to this dwelling unit on the upper floor is marked 15A. The lack of a downward-pointed arrow indicates that this entrance is on the lowest floor of the dwelling.

Marking B: The triangle identifies this entrance as a secondary entrance providing access to dwelling unit 14A. The upward-pointing arrow indicates that the dwelling

unit is a *multi-floor dwelling unit* having living space on the entry floor and one floor above this floor. The horizontal "15A" marking signifies that the entrance door to this dwelling unit on the upper floor is marked 15A. The lack of a downward-pointed arrow indicates that this entrance is on the lowest floor of the dwelling.

Marking C: The triangle identifies this entrance as a secondary entrance providing access to dwelling unit 15A. The downward-pointing arrow indicates that the dwelling unit is a *multi-floor dwelling unit* having living space on the entry floor and one floor below this floor. The horizontal "14A" marking signifies that the entrance door to this dwelling unit on the lower floor is marked 14A. The lack of an upward-pointed arrow indicates that this entrance is on the highest floor of the dwelling. If there is more than one entrance door number associated with the *multi-floor dwelling unit* on an upper or lower floor, the marking should include both entrance door numbers.

APPENDIX C

ENTRANCE DOOR FIRE EMERGENCY MARKING FOR SANDWICH-DESIGN MULTI-FLOOR DWELLING UNITS IN A GROUP R-1 AND GROUP R-2 BUILDING OR OCCUPANCY

1. Entrance door to sandwich-design multi-floor dwelling units having only a single entrance door.

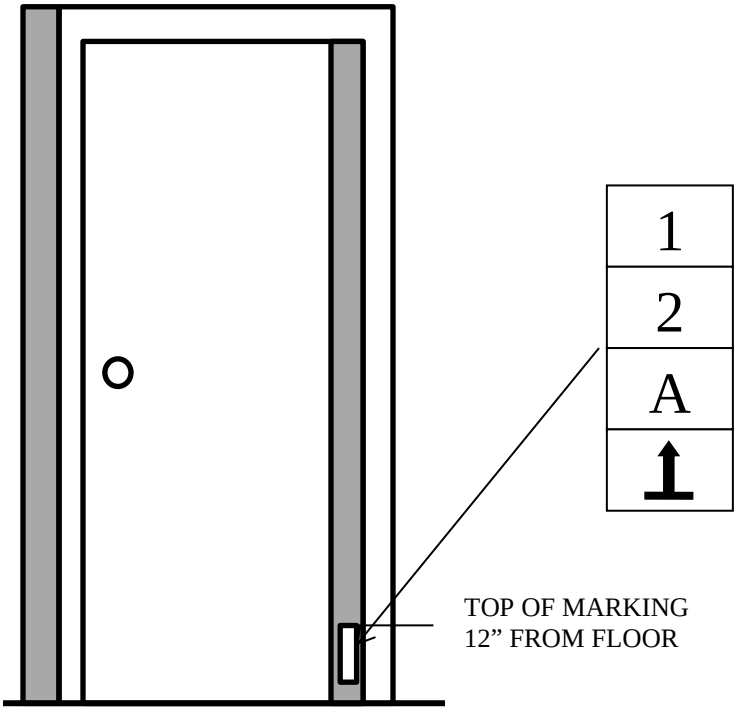

FIGURE C1

Figure C1 depicts the location, vertical configuration, modified arrow symbol (horizontal mark perpendicular to the arrow), and arrow directions for a sandwich-design multi-floor dwelling unit designated 12A accessed from a single entrance door on a lower floor. The upward-pointing arrow indicates that the dwelling unit is located on the floor above the entrance floor. The horizontal mark at the base of the upward-pointing arrow indicates that the dwelling unit has no living space on that floor.

APPENDIX D

EXIT STAIRWELL ENTRANCE DOOR MARKING IN GROUP R-1 AND R-2 BUILDINGS AND OCCUPANCIES

1. Fire emergency markings for exit stairwell entrance doors

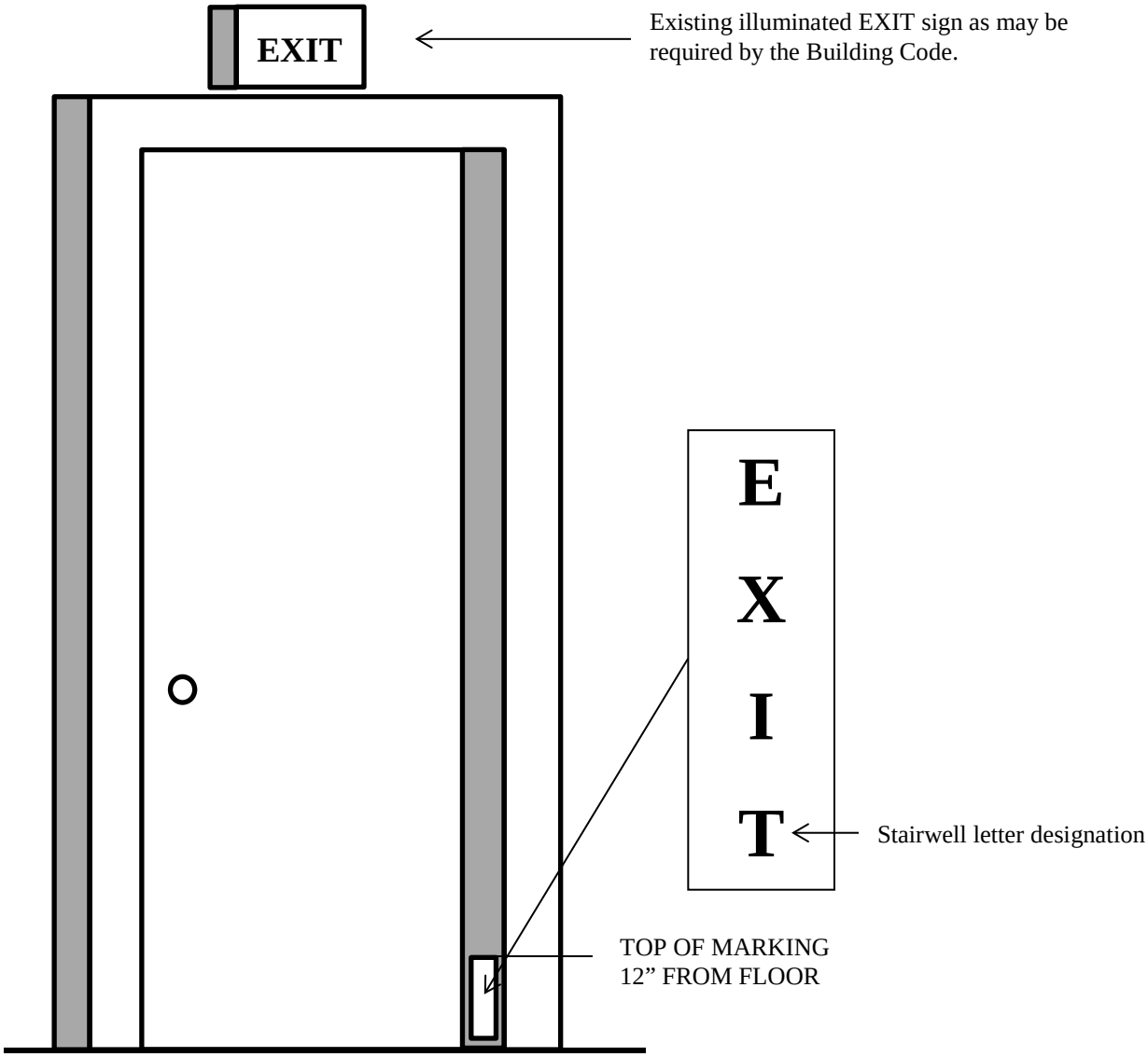

FIGURE D1

Figure D1 depicts the fire emergency marking required to be placed on the public corridor side of the entrance doors to the exit stairwell designated as Stairwell A.

APPENDIX E

PLACEMENT OF ENTRANCE DOOR FIRE EMERGENCY MARKINGS IN GROUP R-1 AND GROUP R-2 BUILDINGS AND OCCUPANCES

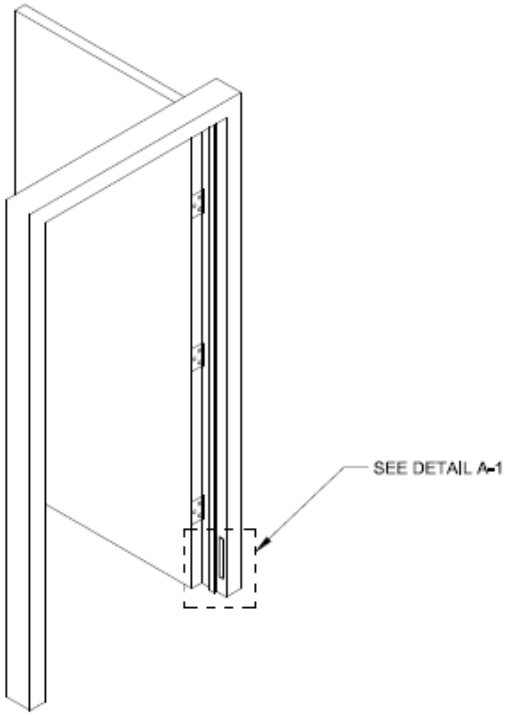

FIGURE E1
ISOMETRIC DETAIL SHOWING SIDE DOOR
LOCATION OF EMERGENCY MARKING

NOT TO SCALE

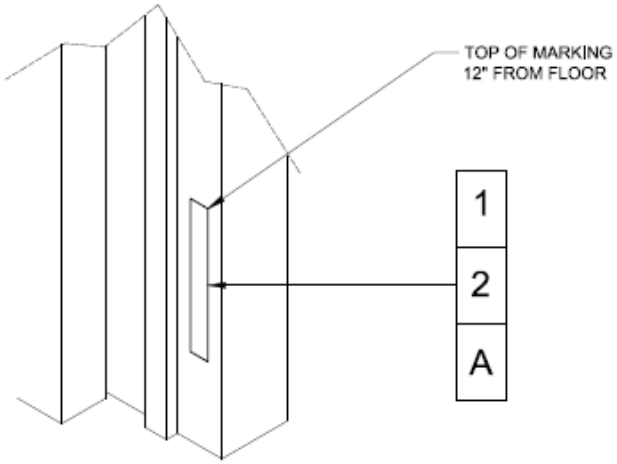

ISOMETRIC DETAIL A-1 OF DOOR JAMB
LOCATION OF MARKING (ENLARGED)

NOT TO SCALE

Figure E1 depicts the location where entrance door fire emergency markings required by this rule must be placed. Such markings are to be affixed to the door jamb on the hinged side of the entrance door as shown in Figure E1, and must be fully visible from the corridor side of the door when the door is in the closed position.

§ 506-510 Reserved

§ 511-01 In-Building Auxiliary Radio Communication Systems

(a) **Scope.** This section sets forth requirements for the design, installation, operation and maintenance of *in-building auxiliary radio communication systems*. In-building radio communication systems that were approved for installation by the *Department of Buildings* and/or the *Department* prior to December 31, 2014, and that were designed to enhance *Department* communications in a manner similar to an *in-building auxiliary radio communication system*, shall be subject to the requirements of this section to the extent set forth in R511-01(j).

(b) **Definitions.** The following terms shall, for purposes of this section and as used elsewhere in the rules, have the meanings shown herein:

Appendix Q. Section 24.5.2 of Appendix Q to the *Building Code*, as codified in *Department of Buildings* rule 1 RCNY 3616-04. *Appendix Q* amends NFPA Standard 72, a Referenced Standard to the *Building Code* and Fire Code.

ARC system. An *in-building auxiliary radio communication system*.

Base station. A transceiver that receives radio signals from an antenna system and retransmits them through the antenna system in an amplified and/or otherwise enhanced manner.

Critical areas. Areas of a building within which radio communication is critical for emergency response operations.

FCC. United States Federal Communications Commission.

General areas. All areas of a building within which radio communication is to be made available for emergency response operations, excluding *critical areas*.

In-building auxiliary radio communication system. A wireless two-way building communication system dedicated for *Department* use and designed in accordance with *Appendix Q* to propagate *Department* wireless radio frequencies within a building. Such a system typically consists of a radio console, base station, cabling, amplifiers and antenna system.

Technical criteria. Technical specifications and standards for the design and operation of *ARC systems* established pursuant to Section 24.5.2.7 of *Appendix Q*. *Technical criteria* include but are not limited to operating frequencies; maximum time domain interference; unit ID and emergency alert signaling; dedicated radio console and other installation specifications; and testing equipment specifications.

Testable area. Locations within a building in which an *ARC system* commissioning test can be conducted, including all areas designed for human occupancy. Mechanical rooms and other utility areas are testable areas if, and to the extent that, they are accessible.

(c) **Permit.** Pursuant to FC105.6, a *permit* shall be obtained from the *Department* to maintain or operate an *ARC system*. Application for a *permit* shall be made in accordance with R511-01(d)(3).

(d) **General Provisions**

(1) **General.** *ARC systems*, whether required by Sections 403 or 917 of the *Building Code* or installed voluntarily, shall be designed, installed, operated and maintained in compliance with FCC regulations, FC511, Section 917 of the *Building Code*, NFPA Standard 72 as amended by *Appendix Q*, this section and applicable *technical criteria*. Any potential conflicts among these requirements shall be promptly reported to the Technology Management Unit of the *Bureau of Fire Prevention.*

(2) **Required frequencies.** An *ARC system* shall be designed to operate on the simplex *Department* frequencies designated as Channels 1 through 10 and Channel 16, or the duplex *Department* frequencies designated as Channels 11 and 12, as set forth in the *technical criteria*. Pursuant to Section 24.5.2.4.2 of *Appendix Q*, *ARC systems* shall be designed to be upgraded to accommodate changes in *Department* frequencies. The design, installation, operation and maintenance requirements set forth in *Appendix Q*, the *technical criteria* and this section may not be applicable to other *Department* communications and the frequencies on which they are propagated. Any *owner* seeking to install and maintain an in-building radio communication system that operates on any *Department* frequency other than the channels specified in this section shall first obtain *Department* approval in such manner and subject to such terms and conditions as the *Department* may prescribe.

(3) **Application and approval process.** The following *Department* approvals shall be obtained to install and maintain an *ARC system*:

(A) **Application for system design approval.** An application shall be filed by or on behalf of the *owner*, and include *design and installation documents* prepared in accordance with FC105.4 and R511-01(e) and detailing the design and intended operation of the *ARC system*; a written agreement executed by the *owner*, for use of *Department* frequencies, as set forth in R511-01(d)(4); and such other documentation as the *Department* may require.

(B) **Plan approval.** The Department will review the application for system design approval in accordance with FC105.4 and, if it determines the

application to be satisfactory, will approve the documents in accordance with FC105.4.4.

(C) **Commissioning test and application for system acceptance and permit issuance**. Upon installation of an *ARC system* in accordance with the *Department*-approved documents, a commissioning test shall be conducted in accordance with FC511.2.2.1 and R511-01(f)(2). The test shall be performed by a person holding a *certificate of fitness* for *ARC system* professional, who is employed by a business holding a *Department* company certificate, as set forth in R115-01. Upon successful completion of the commissioning test, the *owner* shall file an application with the *Department* requesting an acceptance test of the system and issuance of a *permit*. The application shall include a detailed report of the results of the commissioning test, as set forth in R511-01(e)(2) and R511-01(f)(2), and such other information and documentation as the *Department* may require.

(D) **Acceptance test.** The *owner* shall request that the *Department* schedule an acceptance test. The *certificate of fitness* holder who conducted the commissioning test shall be present at the acceptance test and demonstrate operation of the *ARC system* in the presence of *Department* representatives. The *Department* representatives will not conduct a second commissioning test but perform a limited test of the *ARC system* to confirm its operational readiness for *Department* use.

(E) **Permit issuance.** Upon successful completion of the acceptance test, the *Department* will issue a *permit* to maintain and operate the *ARC system.*

(4) **City agreement to operate on FCC-licensed radio frequencies.** *ARC systems* operate on radio frequencies licensed by the *FCC* to the City of New York. The installation of an *ARC system* in accordance with *Building Code* and Fire Code requirements does not constitute legal authority to operate on such licensed radio frequencies. The *owner*, prior to operating an *ARC system*, must obtain the consent of the City of New York to operate on such licensed radio frequencies by executing a written agreement with the City of New York in a form *approved* by the *Department* and submitting it to the *Department* as set forth in R511-01(d)(3)(A). The City will grant temporary consent for purposes of system installation and commissioning testing at time of plan approval, and final consent upon permit issuance.

(5) **Prevention of interference.** An *ARC system* shall be designed, installed, operated and maintained in a manner that does not interfere with any other FCC-licensed radio frequency, including police department, fire department and other public safety agency radio communications. Immediate measures shall be taken to remedy any such interference, including interference intermodulation and spurious emissions, in accordance with *FCC* regulations (as set forth in 47 CFR Part 90), this section and other applicable laws, rules and regulations. The *owner*,

and its contractors and agents, shall cooperate with the *Department* in immediately addressing interference issues, and shall repair or replace any *ARC system* or system component causing interference.

(6) **Supervision.** Operation of the *ARC system*, other than by *Department* personnel, including inspection and testing for the commissioning test, annual certification and five-year recertification required by R511-01(f) and (g), shall be under the *personal supervision* of a person holding a *certificate of fitness* as *ARC system* professional and a General Radiotelephone Operator License issued by the *FCC* pursuant to 47 CFR Part 90, who is employed by a company holding an *ARC testing* company certificate. The duties of such *certificate of fitness* holder include ensuring that:

(A) use of the *ARC system* is immediately discontinued if, upon testing, it is found to cause interference in violation of *FCC* regulations and/or other applicable laws, rules and regulations, or upon being directed to do so by a *Department* representative;

(B) the portable radios programmed with *Department* frequencies are used solely for purposes of *ARC system* testing, and for no other purpose; and

(C) notifications to the *Department* required by this section are made in accordance with this section.

(7) **Sharing of system components.** All *ARC system* components shall be dedicated for system use, except that system radio frequency (RF) cabling may be shared with other in-building radio communication systems if such sharing does not interfere with or otherwise impair the operation of the *ARC system*.

(8) **Citywide standard key.** *Owners, impairment coordinators,* and persons authorized to install or maintain *ARC systems*, may possess a *citywide standard key*.

(e) **Design and Installation Requirements.** An *ARC system* shall be designed and installed in accordance with Section 917 of the *Building Code*, the *Electrical Code*, FC 511, NFPA Standard 72 as amended by *Appendix Q,* this section and the *technical criteria. ARC system design and installation documents* shall set forth the information and documentation required by Section 917 of the *Building Code* and such other information and documentation as the *Department* may require, including the following documents:

(1) **Application for system design approval.** A riser diagram and floor plan showing the location of base stations, amplifiers, antennas and other *ARC system* components, formatted and submitted for *Department* review and approval in the same manner as fire alarm system installations, as set forth in R105-01(c)(1). Any sharing of system radio frequency (RF) cabling with other in-building radio communication systems shall be clearly indicated and accompanied by

documentation demonstrating that such sharing will not interfere with or otherwise impair the operation of the *ARC system*.

(2) **Application for system acceptance and permit issuance**. A floor plan containing the information set forth in R511-01(f)(2), formatted to folio (11" x 17") size, with a copy of the plan in an *approved* electronic format on a compact disk.

(f) **Commissioning and Acceptance Testing.** Commissioning and acceptance testing shall be conducted in accordance with the following requirements, standards and procedures.

(1) **Radio coverage performance standards.** *ARC systems* shall be designed to achieve, and in operation shall achieve, the radio coverage performance standards set forth in Sections 24.5.2.2 and 24.5.2.3 of *Appendix Q*, as measured in the manner set forth in this section.

(A) **Required minimum signal strength and delivered audio quality.** The minimum signal strength of inbound *ARC system* radio signals (as received by a *Department* portable radio at a location remote from the dedicated radio console) and outbound *ARC system* radio signals (as received by the dedicated radio console from a *Department* portable radio) and the average delivered audio quality shall be as set forth in Sections 24.5.2.1.3 and 24.5.2.2 of *Appendix Q*.

(B) **Signal strength measurements.** The signal strength of radio signals received or retransmitted by the *ARC system* shall be measured in the following manner:

(*1*) Measurements shall be taken using:

(*a*) two (2) portable radios, lawfully programmed to transmit on *Department* frequencies pursuant to R115-01(d)(4), one to transmit a radio communication to the *ARC system* and one to receive the retransmission from the *ARC system;*

(*b*) a calibrated spectrum analyzer or a calibrated automatic signal level measurement recording system;

(*c*) a receiving antenna with a gain equal to the antenna on a *Department* portable radio; and

(*d*) a resolution bandwidth nearest the bandwidth of the channel being tested.

(*2*) Signal strength measurements shall be taken as close as possible to the center of each grid cell.

(*3*) Signal strength measurements shall be taken with the antenna held in a vertical position with a center-line between three (3) and four (4) feet above the floor.

(*4*) The delivered audio quality readings shall be assessed and documented on the floor plans.

(*5*) The gain values of any and all amplifiers shall be measured and documented.

(C) **Critical area radio coverage.** The radio coverage performance standard set forth in *Appendix Q* of 100 percent of floor area shall be met in the *critical areas* designated in Section 24.5.2.2.1 of *Appendix Q*, including *sprinkler system* control valves and *standpipe system* hose connections, and any other area of a building designated by the *Department* as a *critical area* based on the *Department*'s review of the *design and installation documents* submitted for an *ARC system* in a particular building.

(D) **General area radio coverage.** The radio coverage performance standard set forth in *Appendix Q* of 95 percent of floor area shall be met or exceeded in all *general areas*.

(2) **Commissioning test**. Upon installation of an *ARC system*, a commissioning test of the *ARC system*, including a radio coverage survey and an inspection and testing of system components, shall be conducted, and the results reported to the *Department*, as follows:

(A) **Radio coverage survey.** The commissioning test shall be conducted in accordance with Annex O of NFPA Standard 1, this section and the *technical criteria*, and shall be considered successful if it confirms that the *ARC system* meets or exceeds the following radio coverage performance standards:

(*1*) On each floor, radio coverage meets or exceeds the standards set forth in R511-01(f)(1).

(*2*) There shall not be a failure of radio coverage in the same grid area on consecutive floors, such as a consistent failure to achieve the required radio coverage in vertically corresponding grids on multiple consecutive floors of a building.

(*3*) The dedicated radio console is functioning properly and monitoring all system components in accordance with *Appendix Q*.

(B) **Inspection and testing of system components.** *ARC system* components, including those listed on Table 1 of this section, shall be inspected and tested to confirm that the system components are in good working order and are operating as designed.

(C) **Retesting.** Any floor of a building that initially fails to meet or exceed the radio coverage standards shall be retested. The resolution of the floor grid size used for testing purposes shall be decreased by reducing the size of each grid area by at least 50 percent to facilitate precise identification of the building areas in which radio coverage is lacking. A commissioning test that fails to confirm radio coverage requirements meeting or exceeding the standards set forth in R511-01(f)(1) shall be treated as unsuccessful and shall result in a redesign of the *ARC system* on the floor or floors found to have failed the commissioning test.

(D) **Submission of commissioning test results.** The results of the radio coverage survey and inspection and testing of system components shall be signed by the *certificate of fitness* holder who personally supervised the test and submitted by the *ARC system testing* company that employs the certificate holder to the *Department* for review and acceptance. The commissioning test results shall be submitted in the form prescribed by the *Department* and shall include the following information and documentation, and such other information and documentation as the *Department* may require:

(*1*) An audio recording of delivered audio quality at each grid location, with an audio description of the floor designation, marker location and the time of recording.

(*2*) A table setting forth the following information for each test location:

(*a*) Marker location;

(*b*) Received signal strength;

(*c*) Radio frequency used for test;

(*d*) The average delivered audio quality value; and

(*e*) Date of last calibration of spectrum analyzer test equipment used to conduct test.

(*3*) A floor plan for each floor, showing the building's floor area on a series of grids. Each grid shall be a maximum of five (5) percent of the total square footage of *testable area* on each floor, but not

more than 1,600 square feet. If an irregular shaped floor plate makes this grid criteria unsatisfactory for testing purposes, an alternative testing grid may be used, subject to *Department* approval. The floor plan shall set forth the following information for each test location:

(*a*) Marker location, correlated with the tabular submission;

(*b*) Grid size(s);

(*c*) *Critical areas*;

(*d*) *General areas*; and

(*e*) Areas that are not *testable areas*, with an explanation as to why such areas are not *testable areas*.

(*4*) A description of the inspection and testing conducted of each of the system components.

(5) A summary and conclusions section. The report shall clearly summarize the test results, and shall include a statement as to whether the test results confirm that the *ARC system* meets or exceeds the standards required by this section, or if not, in what respects it is deficient.

(g) **Operational and Maintenance Requirements.** An *ARC system* shall be operated and maintained in accordance with FC511, this section and the *technical criteria*.

(1) **General.** An *ARC system* shall be maintained in good working order.

(2) **Daily inspection.** The *dedicated radio console* shall be inspected daily to confirm that the *ARC system* is operational and that there is no indication of a system malfunction. Daily inspection may, with *Department* approval, be conducted by means of remote monitoring.

(3) **Annual certification.** An *ARC system* shall be inspected and tested not less than once every 12 months to confirm that the system is in good working order, except that every fifth year a five-year recertification pursuant to R511-01(g)(4) shall be conducted in lieu of the annual certification. The inspection and testing of the *ARC system* shall include the system components listed in Table 1, except that a radio coverage survey is not required. Certification of such inspection and testing and satisfactory system performance shall be submitted to the *Department* in connection with the application for *permit* renewal in such form and manner as the *Department* may prescribe.

(4) **Five-year recertification.** An *ARC system* shall be recertified as properly functioning not less than once every five (5) years in the following manner.

(A) A radio coverage survey of the *ARC system* shall be conducted in the same manner as the commissioning test, and the radio coverage performance standards set forth in R511-01(f) shall apply.

(B) The *Department* shall be given reasonable advance notice of the date of each five-year certification test, which shall be conducted within a continuous 72-hour period. The *Department* reserves the right to require that such test be conducted in the presence of *Department* representatives, and to conduct its own operational readiness testing.

(C) The recertification test shall compare the results with those of the original commissioning test to determine whether there has been any degradation in system performance. If the *ARC system* fails to meet or exceed the applicable radio coverage performance standards, the system shall be repaired or upgraded to achieve such standards.

(D) *ARC system* components, including each of the components listed on Table 1, shall be inspected and tested to confirm that the system components are in good working order and are continuing to operate as designed. Any system component impairing *ARC system* operation or reliability shall be repaired or replaced prior to submission of recertification results.

(E) Successful recertification test results shall be submitted to the *Department* in connection with the application for *permit* renewal in such form and manner as the Department may prescribe.

(5) **Department-ordered testing and demonstrations.** Upon reasonable notice to the *owner*, the *Department* may order a test of an *ARC system* to confirm that it is in good working order or to familiarize *Department* personnel with use of such system.

(h) **Out-of-service systems.** The following actions shall be taken to mitigate the consequences of any *ARC system* that is not fully functional, whether as a result of planned removal from service for maintenance, repair or construction, or an unplanned malfunction affecting system operation.

(1) **Impairment coordinator.** The *owner* shall designate an *impairment coordinator* to take the actions required by this section when an *ARC system* is out of service. In the absence of a specific designee, the *owner* will be considered the impairment coordinator.

(2) **Planned removal from service.** The *impairment coordinator* shall be made aware in advance of any planned removal from service of an *ARC system* for maintenance, repair or construction. The *impairment coordinator* shall authorize the removal of the *ARC system* from service. Before authorizing removal of the system from service, the *impairment coordinator* shall:

(A) determine the extent and expected duration of the out-of-service condition;

(B) maintain the system in service until the maintenance, repair or construction work is ready to begin;

(C) place an impairment tag indicating the nature of the out-of-service condition at the dedicated radio console, *fire command center* or other *approved* location indicating that the *ARC system* is out of service; and

(D) notify the *Department* as set forth in R511-01(h)(4).

(3) **Unplanned out-of-service condition.** Any person who becomes aware that an *ARC system* is out of service for any reason other than a planned removal from service must, upon becoming aware of the out-of-service condition, notify the *owner*, the *impairment coordinator* or, if such persons are not known or not available, any person in charge of the premises of such condition. The *owner* or *impairment coordinator* shall promptly act to address the out-of-service condition in accordance with the procedures set forth in R511-01(h)(2)(A), (C) and (D).

(4) **Notification of Department.** Pursuant to FC107.1, *ARC* systems shall be continuously maintained in good working order. Notification shall be made to the *Department* of any condition impairing the operational readiness of the *ARC* system, including complete or partial system failure or loss of radio coverage in one or more areas of the building, when the system is not restored to service within 48 hours. Such notification shall be made by calling the telephone number set forth in FC401.2.2 for the borough in which the *ARC system* is located, and shall include the information set forth in FC901.7.5.3 as it relates to the out-of-service condition affecting the *ARC system*. Notification shall not be made for conditions that do not presently affect the operational readiness of the system, such as warning signals of the need for future servicing.

(5) **Restoring system to service**. When the *ARC system* has been repaired and restored to service, the impairment coordinator shall:

(A) verify that all inspections and tests required by law, rule, regulation or Referenced Standard, including Annex O of NFPA Standard 1, have been conducted to confirm that the system has been restored to good working order;

(B) if notification was required to be made to the *Department* pursuant to R511-01(h)(4), notify the *Department* that the system has been restored to good working order; and

(C) remove impairment tags.

(i) **Recordkeeping.** A logbook or other *approved* form of recordkeeping for the maintenance of the *ARC system* shall be maintained for a period of six (6) years, together with a complete copy of test results and other documentation of *ARC system* maintenance. The logbook shall include entries for the following maintenance requirements:

(1) Commissioning test results, as required by R511-01(f)(2);

(2) Daily inspection of the system status, as required by R511-01(g)(2);

(3) Annual certification test results, as required by R511-01(g)(3);

(4) Five-year recertification test results, as required by R511-01(g)(4);

(5) Planned removals from service for maintenance, repair or alteration of the *ARC system*, including the extent and duration of any removal and related notifications to the *Department*; and

(6) Unplanned out-of-service conditions, including a description, extent and duration of any system malfunction, corrective actions taken, and related notifications to the *Department.*

(j) **Lawfully Existing In-Building Radio Communication Systems.** Notwithstanding the provisions of this section, the operation of an in-building radio communication system that was approved for installation by the *Department of Buildings* and/or the *Department* prior to December 31, 2014, and that was designed to enhance *Department* communications in a manner similar to an *ARC system*, may be continued under the following circumstances and subject to the following requirements:

(1) **Prior approval.** Such system must have been approved for installation by the *Department of Buildings* and/or the *Department* prior to January 1, 2015.

(2) **Applicable standards.** Such system shall be operated and maintained in compliance with the *design and installation documents* and standards under which such system was approved, and the following requirements:

(A) **Permit.** A *permit* shall be obtained for such system.

(B) **Use of City frequencies and compliance with FCC regulations.** A written agreement with the City of New York for use of *Department*

frequencies shall be executed and such system shall be operated and maintained in compliance with R511-01(d)(1), (2), (4), (5) and (6).

(C) **Supervision.** Operation of such system shall be supervised in accordance with R511-01(d)(6).

(D) **Radio coverage.** A commissioning test shall be conducted in accordance with Section R511-01(f)(2) within one (1) year from January 1, 2016, and an *ARC system* company certificate holder shall submit such results to the *Department.* Any such system that fails to meet or exceed the radio coverage performance standards set forth in R511-01(f)(1) shall be upgraded to meet or exceed such standards, or an application made to the *Department* for approval of appropriate mitigation measures to address gaps or other deficiencies in radio coverage. Such measures may include signage in building lobbies and/or in areas of the building in which such gaps exist.

(E) **Operational and maintenance requirements.** Such systems shall be operated and maintained in accordance with R511-01(g), (h) and (i).

3 RCNY 511-01
Table 1
Commissioning Test and Periodic Maintenance Requirements for In-Building Auxiliary Radio Communication Systems

ARC System Component/System Malfunction
Dedicated Radio Console
Control unit
Lamps and LEDs
Radio desk-set
Audio levels
Control levels
Base Station
Wireless signals
Transceivers
System performance
Radio ID pass-through
Emergency alert pass-through
Base Station Failure Monitoring
Low transmit power
Over temperature
High voltage standing wave ratio
Loss of alternating current (AC) or primary power source on the base station
Low battery capacity
Antenna failure
Signal amplification
Tamper switch
Antenna Systems
Amplifiers
Antennas
Power Supply
Primary (main) power supply
Engine-driven generator
Secondary (standby) power supply
Uninterrupted power supply (UPS)
Battery Tests
Primary battery performance test
Secondary battery/batteries performance test

§ 512 Reserved

CHAPTER 6
BUILDING SERVICES AND SYSTEMS

§601-605 Reserved
§601-01 Removal of Lubricating Oil from Ammonia Refrigerating Systems
§607-609 Reserved

§ 601-605 Reserved

§ 606-01 Removal of Lubricating Oil from Ammonia Refrigerating Systems

(a) Scope. This section sets forth requirements and procedures for the removal of lubricating oil from *refrigerating systems* that use more than 200 pounds of ammonia as a *refrigerant*, referred to in this section as "ammonia *refrigerating systems.*"

(b) General Provisions

(1) The design, installation, operation and maintenance of ammonia *refrigerating systems* shall comply with the requirements of FC606 and Chapter 11 of the *Mechanical Code*.

(2) Alteration of ammonia *refrigerating systems* shall be performed in accordance with applicable provisions of the *Construction Codes*.

(3) Operators of ammonia *refrigerating systems* containing 500 or more pounds of ammonia shall develop and maintain a risk management plan in compliance with *Administrative Code* §24-718 and *Department of Environmental Protection* rules, as set forth in 15 RCNY Chapter 41. In accordance with those provisions, the risk management plan shall address whether the written procedure required by R606-01(d)(2) for manual removal of lubricating oil mitigates the risk of accidental refrigerant release.

(c) Supervision Requirements

(1) Operating engineer requirement. An ammonia *refrigerating system* shall be under the *personal supervision* of a person holding a *certificate of qualification* at all times while the system is in operation when required by FC606.1.1.

(2) Lubricating oil removal operations

(A) Automatic removal system. An ammonia *refrigerating system* equipped to remove lubricating oil from system piping and equipment by means of a rigid-piped automatic oil return or transfer system does not require manual removal of lubricating oil. If for any reason lubricating oil is manually removed from such a system, the removal process shall be conducted in accordance with R606-01(c)(2)(B) and (d)(2).

(B) Manual removal from system. The manual removal of lubricating oil from an ammonia *refrigerating system* that allows such oil to collect in system piping and equipment outside of the compressor shall be conducted in accordance with the following procedures:

(*1*) If the ammonia *refrigerating system* is equipped with dual shut-off valves in series, the second valve in the direction of flow from the system is a self-closing valve that closes upon release of manual pressure or other *approved* automatic shut-off device, and the oil is removed from the system through such valves, the oil removal process shall be personally conducted by at least one *certificate of qualification* holder who has been trained in the written oil removal procedure required by R606-01(d)(2). Absent an imminent threat to life or safety, such *certificate of qualification* holder shall not leave the removal process unattended while it is ongoing.

(*2*) If the ammonia *refrigerating system* is not equipped with such dual shut-off valves, the oil removal process shall be personally conducted by a *certificate of qualification* holder who has been trained in the written oil removal procedure required by R606-01(d)(2). A second *certificate of qualification* holder trained in such procedure shall monitor the oil removal process from a location in direct line of sight of the removal process, with ready access to a *means of egress* to the outdoors. Absent an imminent threat to life or safety, neither *certificate of qualification* holder may leave the oil removal process unattended while it is ongoing.

(d) Operational Requirements

(1) Automatic removal systems. An ammonia *refrigerating system* equipped to remove lubricating oil from system piping and equipment by means of a rigid-piped automatic oil return or transfer system shall be periodically serviced in accordance with the manufacturer's instructions and applicable industry standards, including International Institute of Ammonia Refrigeration (IIAR) Standard 2 (2014 edition) (entitled "Equipment, Design, and Installation of Closed–Circuit Ammonia Mechanical Refrigerating Systems"), to ensure that the automatic removal system is maintained in good working order.

(2) Manual removal from system. A written procedure developed by a trained and knowledgeable person and detailing a step-by-step process for the manual removal of lubricating oil from an ammonia *refrigerating system* (including piping and equipment) requiring such removal shall be maintained on the premises. The procedure shall specifically address the design and operation of the particular type of ammonia *refrigerating system* and the type of drain at each drain point on such system. To the extent feasible, the procedure shall incorporate all safety precautions recommended by the manufacturer and applicable industry standards, including IIAR Standard 2 (2014 edition). At a minimum, such procedure shall include the following requirements:

(A) Each *certificate of qualification* holder participating in the oil removal process shall, prior to conducting such process, be trained by a person trained and knowledgeable in removal of lubricating oil from ammonia *refrigerating systems*, and retrained whenever the *certificate of qualification* holder has not participated in a manual oil removal process in the prior three (3) months; and

(B) Each *certificate of qualification* holder participating in the oil removal process shall be provided with and use all safety and personal protective equipment required to safely conduct such process, including equipment required by United States Occupational Safety and Health Administration regulations; and

(C) If a single *certificate of qualification* holder is required by R606-01(c)(2), a telephone not requiring a coin to operate shall be immediately available to ensure immediate notification to the *Department* in the event of an emergency; or

(D) If two (2) *certificate of qualification* holders are required by R606-01(c)(2):

(*1*) each *certificate of qualification* holder shall be equipped with a portable two-way radio or other *approved* means of communication between the two, and a telephone not requiring a coin to operate shall be immediately available to the *certificate of qualification* holder monitoring the oil removal process to ensure immediate notification to the *Department* in the event of an emergency. In the event of an emergency, the *certificate of qualification* holder monitoring the oil removal process shall make the required notification to the *Department* prior to rendering assistance;

(*2*) the oil removal process shall not be conducted at any time when the *premises* associated with the ammonia *refrigerating system* are

occupied (including occupancy by other employees) or open for business; and

(*3*) notification shall be made to the *Department* not less than one (1) hour but not more than two (2) hours prior to commencement of the oil removal process.

(e) Recordkeeping Requirements

(1) A *certificate of qualification* holder responsible for supervision of the operation of an ammonia *refrigerating system* shall document the periodic servicing of such *refrigerating* system and all removals of lubricating oil from such *refrigerating system*, by making appropriate entries in the *refrigerating system* operator logbook required by FC606.1.3. Such entries shall include the names and company affiliations of the persons who serviced the system; the names and *certificate of qualification* numbers of the *certificate of qualification* holders who conducted and/or monitored the oil removal process; and any notifications to the *Department* pursuant to R606-01(d)(2)(D)(3).

(2) *The certificate of qualification* holder responsible for supervision of the operation of an ammonia *refrigerating system* shall document the training of all persons involved in the manual removal of lubricating oil from such system.

(3) Such records shall be maintained in accordance with FC107.7.

§ 607-609 Reserved

CHAPTER 7
FIRE-RESISTANT RATED CONSTRUCTION

§701-704 Reserved

§ 701-704 Reserved

CHAPTER 8
INTERIOR FURNISHINGS, DECORATIONS AND SCENERY

§801-804 Reserved
§805-01 Flame-Resistant Decorations
§805-02 Flame-Retardant Scenery
§806 Reserved

§ 801-804 Reserved

§ 805-01 Flame-Resistant Decorations

(a) Scope. This section sets forth the standards, requirements and procedures for the testing and certification of flame-resistant *decorations*.

(b) General Provisions

(1) Applicability. The requirements of this section apply to *decorations* in any *Group A, E, I, M occupancy*, any common area in a *Group R-1, R-2 and B occupancy*, and any building or indoor space used as a public gathering place, other than guest rooms in hotels and motels, private offices in commercial buildings, and houses of worship.

(2) Prohibition. It shall be unlawful to install or maintain in any *premises* subject to this section any *decoration* that is not of a *flame-resistant material*.

(3) Supervision. The treating of a *decoration* with a chemical compound to impart flame resistance shall be conducted by or under the *personal supervision* of a *certificate of fitness* holder.

(4) Affidavit of flame resistance. It shall be unlawful to install or maintain any *decoration* in any *premises* subject to this section unless an affidavit of flame resistance for such *decoration* has been filed with the *Department* in compliance with the requirements of this section.

(c) Testing of Flame-Resistant Materials. *Decorations* that are treated with a flame-retardant chemical to render them flame-resistant may be subject to a field flame test by *Department* representative at any time as set forth in this section.

(1) The material should be tested using a sample that is dry and, unless impracticable, approximately one and one-half (1½) inches wide by four (4) inches long.

(2) The flame test shall be performed in a draft-free, safe location, outdoors where practicable, and within ten (10) feet of a portable fire extinguisher with at least a 2-A rating.

(3) The sample shall be suspended (preferably with tongs) with the long axis vertical. The flame from a common wood match shall be applied to the center of the bottom edge of the sample for 12 seconds.

(4) The sample shall be deemed to be satisfactorily flame-resistant only when:

(A) the flaming does not spread rapidly over the sample;

(B) the sample does not continue to burn for more than two (2) seconds after the match has been withdrawn; and

(C) the flaming material does not break or drip from the sample and continue to burn.

(d) Affidavit of Flame-Retardant Treatment

(1) The *owner* of any *premises* in which there is any *decoration* that is required to be subjected to a *flame-retardant treatment* shall, in accordance with the requirements of this section, file with the *Department* an affidavit of *flame-retardant treatment* for each such *decoration*.

(2) A *decoration* that is not inherently flame-resistant shall be subjected to a *flame-retardant treatment*:

(A) before being installed in the *premises*;

(B) after each washing, dry cleaning, ironing or sewing of the *decoration*, or other processing of the *decoration* that might impair the effectiveness of its flame resistance, unless otherwise provided in the *certificate of approval* for such *flame-retardant treatment*;

(C) at the end of the time period following each *flame-retardant treatment* that the manufacturer of the flame-retardant chemical warrants that the *flame-retardant treatment* will be effective, but in no case more than three (3) years from the date of the last affidavit of *flame-retardant treatment* filed with the *Department*; and

(D) any time the *flame-resistant material* fails to pass a field flame test conducted in accordance with the requirements of R805-01(c).

(3) The *owner* of the *premises* shall obtain from the person who performed the *flame-retardant treatment* an affidavit of such *flame-retardant treatment* that meets the requirements of R805-01(d)(4). Such *owner* shall file such affidavit with the *Department* in accordance with the requirements of R805-01(d)(5), and shall maintain on the *premises* for inspection by any *Department* representative a copy of such affidavit and a record of each washing or dry cleaning of the *decoration*, or other processing of the *decoration* that might impair the effectiveness of its flame resistance.

(4) An affidavit executed by the person who performed or personally supervised the *flame-retardant treatment* and the testing of the *flame-resistant material* shall contain the following information:

(A) the name of the affiant, and the number and expiration date of his or her *certificate of fitness* for *flame-retardant treatment*;

(B) the date of the treatment and/or testing;

(C) the name of the manufacturer of the flame-retardant chemical, its trade name and its Certificate of Approval number;

(D) a detailed description of the materials treated and a statement indicating that the *flame-retardant treatment* used has been approved under the *certificate of approval* for the materials treated;

(E) the period of time that the manufacturer of the flame-retardant chemical warrants that the material's flame resistance will be effective; and

(F) the affiant's certification that the material, and the *flame-retardant treatment* comply with R805-01(b), and that the affiant personally subjected a sample of the treated material to a flame test in accordance with the requirements of R805-01(c), or personally supervised such test, and the material passed such test.

(5) An affidavit of *flame-retardant treatment* shall be filed with the *Bureau of Fire Prevention* not later than ten (10) days after the installation or reinstallation of the *decoration* in the *premises* following the *flame-retardant treatment* and/or testing of the *decoration* in accordance with R805-01(d)(2).

(6) The *Department* may reject any affidavit of *flame-retardant treatment* that the *Department* determines is not in compliance with the requirements of this section, and shall give written notice of such determination to the *owner* of the public space containing the *decoration* and to the *certificate of fitness* holder who executed such affidavit. The *decoration* shall be removed from the affected occupancy and shall not be reinstalled until it has been subjected to a *flame-retardant treatment* in compliance with the requirements of this section and a satisfactory affidavit of *flame-retardant treatment* filed with the *Department*.

(e) Affidavit of Inherently Flame-Resistant Material

(1) The *owner* of any *premises* in which there is any *decoration* made of inherently *flame-resistant material* shall file an affidavit from a *certificate of fitness* holder for each such *decoration* attesting to such properties. The *owner* of such *premises* shall file with the *Department* in compliance with the requirements of this section,

and shall maintain a copy of such affidavit on the *premises* for inspection by any *Department* representative.

(2) The affidavit of inherently *flame-resistant material* shall contain the following information:

(A) the name of the person who personally inspected and/or tested the *decoration*, and the number and expiration date of his or her *certificate of fitness* for *flame-retardant treatment*;

(B) the name of the manufacturer of the material; and

(C) an exact description of the material, and a description of the properties of the material that render it inherently flame-resistant.

(3) An affidavit of inherently *flame-resistant material* shall be filed with the *Bureau of Fire Prevention* not later than ten (10) days after the installation or reinstallation of the *decoration* in the *premises*.

(4) The *Department* may reject any affidavit of inherently *flame-resistant material* that the *Department* determines is not in compliance with the requirements of this section, and shall give written notice of such determination to the *owner* of the *premises* containing the *decoration* and to the *certificate of fitness* holder who executed such affidavit. The *decoration* shall be removed and shall not be reinstalled until a satisfactory affidavit of inherently *flame-resistant material* has been filed with the *Department*, or the *decoration* has been subjected to a *flame-retardant treatment* in accordance with the requirements of this section and a satisfactory affidavit of *flame-retardant treatment* has been filed with the *Department*.

(f) Temporary Decorations. Notwithstanding any other provision of this section to the contrary, when a *decoration* is installed or maintained in a *premises* on a temporary basis not to exceed 30 days, such as at a trade show or similar public gathering, the *Department*, in its discretion and upon a showing by the *application* that it would be an undue hardship to comply with the requirements of this section, may accept, in lieu of an affidavit of *flame-retardant treatment* or inherently *flame-resistant material*, a testing report from a nationally recognized laboratory or certification from other qualified *flame-retardant treatment* professionals acceptable to the *Department* indicating that the material has passed Test 1 or Test 2, as set forth in NFPA 701. Nothing contained in this subdivision shall be construed to necessitate that representative samples or other merchandise displayed at trade shows or similar public gatherings comply with the requirements of this section.

(g) Enforcement. In addition to such other penalties that may be applicable for failure to comply with the requirements of FC Chapter 8 or this section, the *Department* may:

(1) order an *owner* of any *premises* containing a *decoration* for which no affidavit has been filed with the *Department* or that fails a flame test to remove such *decoration* forthwith, and not to reinstall or maintain the *decoration* in any affected occupancy unless and until the *decoration* has been subjected to a *flame-retardant treatment* and tested and an affidavit has been filed in accordance with this section.

(2) take appropriate action against the *certificate of fitness* holder for misconduct for improperly completing an affidavit of *flame-retardant treatment* or inherently *flame-resistant material*.

§ 805-02 Flame-Retardant Scenery

(a) Scope. This section sets forth the standards, requirements and procedures for the testing and certification of flame-retardant *scenery*.

(b) General Provisions

(1) Applicability. The requirements of this section apply to *scenery* in any *Group A occupancy*.

(2) Prohibition. It shall be unlawful to install or maintain in any *Group A occupancy* any *scenery* that is not flame-retardant in compliance with the requirements of FC805.2.

(3) Supervision. The treating of *scenery* with a coating to impart flame retardant shall be conducted by or under the *personal supervision* of a *certificate of fitness* holder.

(4) Affidavit of flame retardant. It shall be unlawful to install or maintain any *scenery* in any *Group A occupancy* unless an affidavit of flame retardant for such *scenery* has been filed with the *Department* in compliance with the requirements of this section.

(c) Testing of Flame-Retardant Scenery. *Scenery* that is coated with a *flame-retardant coating* to render them flame-retardant may be subject to a field flame test by *Department* representative at any time as set forth in this section.

(1) The material should be tested using a sample that is dry and, unless impracticable, approximately one and one-half (1½) inches wide by four (4) inches long.

(2) The flame test shall be performed in a draft-free, safe location, outdoors where practicable, and within ten (10) feet of a portable fire extinguisher with at least a 2-A rating.

(3) The sample shall be suspended (preferably with tongs) with the long axis vertical. The flame from a common wood match shall be applied to the center of the bottom edge of the sample for 12 seconds.

(4) The sample shall be deemed to be satisfactorily flame-retardant only when:

(A) the flaming does not spread rapidly over the sample;

(B) the sample does not continue to burn for more than two (2) seconds after the match has been withdrawn; and

(C) the flaming material does not break or drip from the sample and continue to burn.

(d) Affidavit of Flame-Retardant Coating

(1) The *owner* of any *premises* in which there is any *scenery* that is required to be subjected to a *flame-retardant coating* shall, in accordance with the requirements of this section, file with the *Department* an affidavit of *flame-retardant coating* for each such *scenery*.

(2) *Scenery* that without the application of a *flame-retardant coating* cannot meet the fire-retardant requirements of FC805.2 shall be coated with a *flame-retardant coating*:

(A) before being installed in the *premises*;

(B) at the end of the time period following each *flame-retardant coating* that the manufacturer of the flame-retardant chemical warrants that the *flame-retardant coating* will be effective, but in no case more than three (3) years from the date of the last affidavit of *flame-retardant coating* filed with the *Department*; and

(C) any time the *scenery* fails to pass a field flame test conducted in accordance with the requirements of R805-02(c).

(3) The *owner* of the *premises* shall obtain from the person who performed the *flame-retardant coating* an affidavit of such *flame-retardant coating* that meets the requirements of R805-02(d)(4). Such *owner* shall file such affidavit with the *Department* in accordance with the requirements of R805-02(d)(5), and shall maintain on the *premises* for inspection by any *Department* representative a copy of such affidavit.

(4) An affidavit executed by the person who performed or personally supervised the *flame-retardant coating* and the testing of the flame-retardant *scenery* shall contain the following information:

(A) the name of the affiant, and the number and expiration date of his or her *certificate of fitness* for *flame-retardant coating*;

(B) the date of the coating and/or testing;

(C) the name of the manufacturer of the *flame-retardant coating*, its trade name and its Certificate of Approval number;

(D) a detailed description of the materials treated and a statement indicating that the *flame-retardant coating* used has been approved under the *certificate of approval* for the materials treated;

(E) the period of time that the manufacturer of the *flame-retardant coating* warrants that the material's flame retardant will be effective; and

(F) the affiant's certification that the material and the *flame-retardant coating* comply with R805-02(b), and that the affiant personally subjected a sample of the treated material to a flame test in accordance with the requirements of R805-02(c), or personally supervised such test, and the material passed such test.

(5) An affidavit of *flame-retardant coating* shall be filed with the *Bureau of Fire Prevention* not later than ten (10) days after the installation or reinstallation of the *scenery* in the *premises* following the *flame-retardant coating* and/or testing of the *scenery* in accordance with R805-02(d)(2).

(6) The *Department* may reject any affidavit of *flame-retardant coating* that the *Department* determines is not in compliance with the requirements of this section, and shall give written notice of such determination to the *owner* of the *Group A occupancy* containing the *scenery* and to the *certificate of fitness* holder who executed such affidavit. The *scenery* shall be removed from the *Group A occupancy* and shall not be reinstalled until it has been subjected to a *flame-retardant coating* in compliance with the requirements of this section and a satisfactory affidavit of *flame-retardant coating* filed with the *Department*.

(e) Affidavit of Inherently Flame-Retardant Scenery

(1) The *owner* of any *premises* in which there is any *scenery* made of material that inherently complies with the flame-retardant requirements of FC805.2 shall file an affidavit from a *certificate of fitness* holder for each such *scenery* attesting to such properties. The *owner* of such *premises* shall file with the *Department* in

compliance with the requirements of this section, and shall maintain a copy of such affidavit on the *premises* for inspection by any *Department* representative.

(2) The affidavit of inherently flame-retardant *scenery* shall contain the following information:

(A) the name of the person who personally inspected and/or tested the *scenery*, and the number and expiration date of his or her *certificate of fitness* for *flame-retardant coating*;

(B) the name of the manufacturer of the material used in the *scenery*; and

(C) an exact description of the material used in the *scenery*, and a description of the properties of the material that render it flame-retardant.

(3) An affidavit of inherently flame-retardant *scenery* shall be filed with the *Bureau of Fire Prevention* not later than ten (10) days after the installation or reinstallation of the *scenery* in the *premises*.

(4) The *Department* may reject any affidavit of inherently flame-retardant *scenery* that the *Department* determines is not in compliance with the requirements of this section, and shall give written notice of such determination to the *owner* of the *premises* containing the *scenery* and to the *certificate of fitness* holder who executed such affidavit. The *scenery* shall be removed and shall not be reinstalled until a satisfactory affidavit of inherently flame-retardant *scenery* has been filed with the *Department*, or the *scenery* has been subjected to a *flame-retardant coating* in accordance with the requirements of this section and a satisfactory affidavit of *flame-retardant coating* has been filed with the *Department*.

(f) Temporary Scenery. Notwithstanding any other provision of this section to the contrary, when *scenery* is installed or maintained in a *premises* on a temporary basis not to exceed 30 days, such as at a trade show or similar public gathering, the *Department*, in its discretion and upon a showing by the *application* that it would be an undue hardship to comply with the requirements of this section, may accept, in lieu of an affidavit of *flame-retardant coating* or inherently flame-retardant *scenery*, a testing report from a nationally recognized laboratory or certification from other qualified *flame-retardant coating* professionals acceptable to the *Department* indicating that the material is in compliance with the requirements of FC805.2. Nothing contained in this subdivision shall be construed to necessitate that representative samples or other merchandise displayed at trade shows or similar public gatherings comply with the requirements of this section.

(g) Enforcement. In addition to such other penalties that may be applicable for failure to comply with the requirements of FC Chapter 8 or this section, the *Department* may:

(1) order an *owner* of any *premises* containing *scenery* for which no affidavit has been filed with the *Department* or that fails a flame test to remove such *scenery*

forthwith, and not to reinstall or maintain the *scenery* in any affected occupancy unless and until the *scenery* has been subjected to a *flame-retardant coating* and tested and an affidavit has been filed in accordance with this section.

(2) take appropriate action against the *certificate of fitness* holder for misconduct for improperly completing an affidavit of *flame-retardant coating* or inherently flame-retardant *scenery*.

§ 806 Reserved

CHAPTER 9
FIRE PROTECTION SYSTEMS

§901-01	Central Station Monitoring of Fire Alarm Systems
§901-02	Maintenance of Sprinkler System Pressure Tanks
§901-03	Reserved
§901-04	Buildings Temporarily Occupied as Emergency Shelters
§902	Reserved
§903-01	Flow Testing of Residential Sprinkler Systems
§904-01	Clean Agent Fire Extinguishing Systems Acceptance Testing
§905-01	Standpipe System Pressure Reducing Devices
§906	Reserved
§907-01	Fire Alarm Recordkeeping, Smoke Detector Maintenance, Testing and Recordkeeping, and the Prevention of Unnecessary and Unwarranted Fire Alarms
§908-911	Reserved
§912-01	Periodic Testing of Standpipe System and Sprinkler Systems With Fire Department Connections
§913-914	Reserved

§ 901-01 Central Station Monitoring of Fire Alarm Systems

(a) Scope. This section sets forth standards, requirements and procedures for:

(1) the monitoring and related maintenance of all *fire alarm systems* that are installed in *premises* located in New York City and that transmit an *alarm signal* to a *central station* that monitors such systems for the purpose of re-transmitting or otherwise reporting *fire alarms* to the *Department*; and

(2) the operation of the *central stations* that monitor and maintain *fire alarm systems.*

(b) Definitions. The following terms shall, for purposes of this section and used elsewhere in the rules, have the meanings shown herein:

Alarm service. The service provided by a *central station company* commencing upon the transmission from the *protected premises* of an *alarm signal*, a *supervisory signal*, or a *trouble signal*.

Approved central station company. A *central station company* that has been issued a valid *certificate of operation*.

Central station company. A person or entity engaged in the operation of a *central station*.

Central station signaling system. A system comprised of the *protective signaling system* at the *protected premises*, the *central station* physical plant, the exterior communications channels, and satellite stations, if any.

Designated representative. A person or entity designated by the subscriber who shall be responsible for receiving notifications from the *central station company* concerning the status of the *protective signaling system* at the *protected premises* and who is authorized to take action with respect to such system.

Mandatory system. A *protective signaling system* whose installation at a *protected premises* is required by law.

Proprietary central station. A *central station* operated by or on behalf of the *owner* of the *protected premises* monitored by the *central station*, that monitors *protected premises* other than the *premises* in which the *central station* is located. For purposes of this section and R4604-01, unless otherwise specifically provided, reference to "*central station company*" shall be deemed to include *proprietary central stations*.

Protective signaling system. A system or device installed at a *protected premises* and designed to transmit an *alarm signal*, a *supervisory signal* or a *trouble signal*.

Runner service. The dispatching to the protected premises of individuals designated by a *central station company*, other than the required number of operators on duty to monitor signals, to silence, reset and otherwise restore the *protected signaling system* to normal service. Such runners may be employees of the central station company, another approved central station company, or a service retained by the central station company, provided that the individuals are trained in and knowledgeable of the protective signaling systems for which they are providing runner service.

Subscriber. An *owner* of a *protected premises*, or an *owner* of a *fire alarm system* installed on such a *premises*, who has arranged for a *central station company* to monitor the *fire alarm system* on the *protected premises* for the purpose of reporting *fire alarms* to the *Department*.

Terminal. A number assigned by the *Department* which indicates a specific location and/or type of *alarm signal* at a *protected premises*.

Transmitter. A component of a *protective signaling system* that provides the link between a *fire alarm system* and the transmission channels.

Voluntary system. A *protective signaling system* whose installation at a *protected premises* is not required by law.

(c) Prohibited Fire Alarm System Monitoring. It shall be unlawful for:

(1) Any person or entity, pursuant to FC901.6.3.5, to operate a *central station company* or *central station* that monitors *fire alarm systems* in *protected premises* without having first obtained a *certificate of operation* pursuant to R115-01. A *central station company* shall obtain a *certificate of operation* prior to operating any *central station* or transmitting any alarms to the *Department* received from a *protected premises*.

(2) Any *owner* of a *protected premises*, or other person or entity to contract for, arrange, or otherwise cause or allow, a *central station company* to receive or retransmit *alarm signals* from a *protected premises*, unless such *central station company* possesses a valid *certificate of operation*. This provision shall apply whether the *protective signaling system* installed at a *protected premises* is a *mandatory* or *voluntary system*.

(d) General Provisions.

(1) Applicable provisions of law. All *central stations* and *proprietary central stations* shall be designed, installed, operated and maintained in compliance with the requirements of FC Chapter 9, this section and NFPA 72. The relationship between the provisions of the Fire Code, this section and such referenced standard shall be as set forth in FC102.6.2.

(2) Compliance with Building Code and Electrical Code. All *central stations* and *proprietary central stations* shall be designed, installed, operated and maintained in compliance with the requirements of the *Building Code* and the *Electrical Code*.

(e) Central Stations. *Central stations* shall comply with the following design and installation requirements.

(1) Security. The *central station* operating room shall be locked at all times and access restricted to authorized persons only.

(2) Emergency power. Emergency power shall be provided for the exclusive use of the operating room and other areas vital to the continuous operation of the *central station* and its provision of *fire alarm* monitoring services. The emergency power supply shall function automatically upon failure of the normal power supply system. Emergency power systems shall be maintained in accordance with FC604.

(3) Listed equipment. The *central station* shall be equipped with devices, equipment and systems capable of automatically receiving and recording signals, as required by NFPA 72. Such devices, equipment and systems shall be *listed* by Factory Mutual, Underwriters Laboratories or other *approved* nationally recognized testing laboratory.

(4) Circuit adjusting equipment. Circuit adjusting instruments or equipment for emergency operations may be automatically initiated or manually operated upon receipt of a *trouble signal*.

(5) Retransmission of alarm signals. The retransmission of an alarm signal received at the *Department* shall be effected as follows:

(A) by the use of two (2) telephone lines provided with suitable voice transmitting, receiving and automatic recording equipment, provided that these lines shall not be used for any purpose except communication between the *Department* and the *central station* and shall have terminal equipment located at the *central station* and the *Department* and shall be provided with twenty-four hour standby power; or

(B) any other means of retransmission deemed by the *Commissioner* to effect a retransmission at a level of reliability that equals or exceeds that under R901-01(e)(5)(A).

(6) Alternative voice communication capabilities. The company shall maintain at each *central station* at least one cellular telephone available for communication with the *Department* and the *protected premises* in the event that telephone circuitry is inoperable.

(7) The *central station company* shall bear all costs associated with the retransmission of *fire alarm signals* to the *Department*, including any costs incurred by the *Department*.

(f) Central Station Operations

(1) General responsibilities. A *central station company* shall be accountable to its subscriber to provide all of the requirements of this section, and shall set forth such obligation in its contract with the subscriber. In all cases where an *approved central station company* has subcontracted with another entity to provide services,

the *central station company* shall be responsible for ensuring that the services provided by the subcontractor comply with this section and with all other applicable laws, rules, regulations and reference standards. A *central station company* may not subcontract signal monitoring or retransmission services or maintenance to a separate entity unless said separate entity is itself an *approved central station company*.

(2) Maintenance of central stations and transmitters

(A) A *central station company* shall be responsible for the maintenance of its *central stations* and the transmitters at *protected premises* within New York City monitored by such *central stations*. A *central station company* shall have available at all times designated individuals trained and knowledgeable in the maintenance and repair of *central station* devices, equipment and systems, including transmitters, so as to prevent or minimize any disruptions in *fire alarm system* monitoring. Such individuals shall be employees of the central station company (other than the required number of operators on duty to monitor signals); another *approved* central station company; or of the holder of a fire alarm installer license issued by the New York Secretary of State pursuant to Article 6-D of the New York State General Business Law or a master electrician licensed by the *Department of Buildings* and registered with the New York Secretary of State in accordance with such Article 6-D, who has been retained to provide such service. In the event of a malfunction, repairs shall be immediately undertaken so as to restore proper operation and system monitoring as soon as possible.

(B) A *central station company* shall ensure that a complete and satisfactory test of all transmitters is conducted at each *protected premises* in compliance with the requirements of NFPA 72.

(C) A *central station company* shall test all paths of communication for the *central station* signaling system that are not supervised at least once every twelve hours. A record of such tests shall be maintained in the *central station* log.

(3) Monitoring of fire alarm systems

(A) A *central station company* shall have sufficient personnel on duty at all times to ensure immediate attention to all signals received. This shall include a minimum of two (2) operators at each *central station*, each of whom shall possess a *certificate of fitness* to operate *central station* equipment. A trainee functioning as an operator must work under the direct supervision and in the presence of an operator holding a *certificate of fitness* and may not be counted as one of the two (2) operators holding *certificates of fitness* as required by this section.

(B) *Central station* operators shall monitor and process all *fire alarm signals* before any other signals, regardless of the order in which they are received.

(C) *Alarm signals* shall be re-transmitted to the *Department* immediately upon receipt of the full signal at the *central station*. A full signal is deemed to be received at the time it is capable of being decoded.

(D) *Alarm signals* transmitted to the *Department* shall indicate the type of alarm received (e.g., automatic, valve or manual).

(4) Recordkeeping

(A) All records required to be maintained under this section shall be entered in a *central station* log which shall be maintained at each *central station*. The *central station* log shall be available at all times to the *Department* for inspection and copies shall be provided upon the *Department*'s request. The *central station* log shall be kept on a yearly basis and be maintained for six (6) years following the period of use.

(B) The format of the *central station* log shall be either:

(*1*) a bound (not spiral bound) logbook for each calendar year, with consecutively numbered lined pages with entries made in ink;

(*2*) a computer database with a legend or key to all symbols and abbreviations; or

(*3*) any other format approved by the *Commissioner*.

Where a computer format is used, the data may be stored on tape, disk or hard copy, provided that hard copies are maintained for 18 months following the period of use, in addition to the storage of the tape or disk for six (6) years following the period of use.

(C) A *central station* signaling system shall receive and retransmit all signals and information which the subscriber is required by law to transmit, such as the location of the alarm source (building, floor, section, zone, or subdivision) and/or the type of *alarm signal* (e.g., automatic, valve or manual). *Central stations* presently unable to determine the type of *alarm signal* received due to the lack of sufficient transmitters at the *protected premises* shall be granted a period of time, as the *Department* deems reasonable, to make the conversions necessary to comply with this requirement.

(D) Subsequent alarm and *supervisory signals* received from the same building shall be retransmitted to the *Department* upon receipt.

(E) A combination *alarm signal* that by its nature is indicative of waterflow in a *sprinkler system* at the *protected premises* shall be retransmitted in the same manner as a *fire alarm signal*. In addition, the *designated representative* for the *protected premises* shall be notified as soon as possible.

(F) The dates and times of the receipt and retransmission of all signals shall be recorded in the *central station* log.

(5) Runner service. A *central station company* shall ensure that a *fire alarm system* requiring manual silencing or resetting is restored to normal service no later than 90 minutes from receipt of an *alarm signal*. The *central station company* shall dispatch a runner to the *protected premises* for such purpose and shall immediately notify the *Department* once the system has been restored. A runner need not be dispatched and may be recalled if the *central station* confirms that the *fire alarm system* has already been restored, in which case the *central station company* shall immediately notify the *Department* of such fact.

(6) Notification of service disruptions

(A) It is imperative that disruptions in *central station* service be detected as soon as possible and that service be restored immediately. The *Department* shall be notified of any disruption of *fire alarm* monitoring services regardless whether the disruption is due to failure of a *fire alarm system*, a *fire suppression system*, a *protective signaling system*, or *central station* equipment. The *central station company* shall make the following notifications:

(*1*) The *central station company* shall notify the *Department* whenever a *fire alarm system* or *fire protection system* is expected to be out of service for eight (8) hours or longer at a *protected premises*, where such information is available. This provision shall apply only to the installation of *mandatory systems*.

(*2*) The *central station company* must notify the *Department* and the *designated representative* for the *protected premises* forthwith in the event that a *central station* is either unable to receive *alarm signals* from a *protected premises* or to retransmit signals to the *Department* due to inoperative *central station* equipment or telephone circuitry.

In making the above-described notifications, the *central station company* shall identify to the *Department* the terminal assignment number(s) for the affected *premises*, where such information is available.

(B) A *central station company* shall record in the *central station* log the following information relating to disruptions in service:

(*1*) All instances in which a *fire alarm system* or *fire protection system* is out of service for eight (8) hours or more at a *protected premises*, where such information is ascertainable. This record shall identify the terminal assignment number for the *protected premises*, as well as the date, time and duration of the disruption of service.

(*2*) All instances in which a *protective signaling system* at a *protected premises* is out of service for two (2) hours or more. This record shall identify the terminal assignment number for the *protected premises*, as well as the date, time and duration of the disruption in service.

(7) Posting of certificate. A copy of the *certificate of operation* shall be posted at each *central station* operated by the *central station company*.

(g) Compensation. Every *central station company* shall pay compensation to the *Department* in accordance with the provisions of R4604-01. Failure to timely remit such compensation shall be grounds for non-renewal, suspension or revocation of a *certificate of operation*, or denial of a new *certificate of operation*, in addition to any and all other remedies provided by law.

(h) Registration of Central Station-Monitored Fire Alarm Systems

(1) *Central station companies* shall register each *fire alarm system* on each *protected premises* that it is monitoring by submitting to the *Bureau of Fire Prevention*, on the *application* form prescribed by the *Department*, the following information and such other information and documentation as the *Department* may require:

(A) The address of the *protected premises* in which the *fire alarm system*(*s*) are installed;

(B) The number and type of *fire alarm systems* monitored at the *premises*, regardless of the number of *terminals* associated with each such system;

(C) The floors, or portions thereof, monitored by each *fire alarm system*;

(D) The name, address and telephone number of the *owner* or operator of each *fire alarm system*; and

(E) The type and location of each terminal, including *manual fire alarm boxes*, *sprinkler and standpipe system* flow alarms and tamper switches,

and heat, smoke and carbon monoxide detectors, associated with each *fire alarm system*.

(2) A *central station company* shall register with the *Department* each *fire alarm system* it proposes to monitor prior to the commencement of the receipt or retransmission of *alarm signals* from the *fire alarm system*, including resumption of previously discontinued or suspended monitoring service.

(3) The *Department* may deny a registration *application* upon a determination that the *fire alarm system* has not been installed and/or is not being operating in accordance with all applicable laws, rules and regulations, or other good cause. The *Department* may conduct an inspection of the *protected premises* to verify the proper installation and operation of the *fire alarm system*. A *central station company* shall not monitor any *fire alarm system* as to which the *Department* has denied registration.

(4) A *central station company* shall give prior written notice to the *Department*, on a form prescribed by the *Department*, of the discontinuance or temporary suspension of its monitoring of a *fire alarm system*, at least ten (10) days prior to such discontinuance or suspension. Five (5) additional days notice shall be provided if notice is given by mail.

(5) A *central station company* shall give written notice to the *Department* within seven (7) days of any change in any of the information set forth on its *fire alarm system application* form.

§ 901-02 Maintenance of Sprinkler System Pressure Tanks

(a) Scope. This section sets forth requirements for the periodic maintenance of pressure tanks that supply water to *sprinkler systems*.

(b) General Provisions. Water tanks that supply water to *sprinkler systems* shall be maintained in compliance with the requirements of FC901.6, NFPA 25, and this section.

(c) Periodic Maintenance Requirements. *Sprinkler system* pressure tanks shall be inspected and tested at least monthly by a *certificate of fitness* holder and if necessary, corrective action taken, in accordance with the following procedure:

(1) Close both the top and bottom valves on the sight glass level gauge.

(2) Open the petcock at the bottom of the gauge glass and drain the water out of the glass by cracking the top valve to clear the glass. Close the petcock. Open the top valve and allow air to enter the glass.

(3) Open the bottom valve to allow water to enter the gauge glass. Open the top valve.

(4) When the air and water levels stabilize, the level should be at the 2/3 level or the level required for the design of the system. Immediate corrective action shall be taken in the event the water level is below the design level.

(5) If the water level is too high, drain water using the emergency valve on the tank. After draining to the design level, introduce compressed air into the tank until the design air pressure is obtained.

(d) Notification of Central Station. If the *sprinkler system* pressure tank is monitored by a *central station*, the *central station company* shall be notified before any testing is conducted.

§ 901-03 Reserved

§ 901-04 Buildings Temporarily Occupied as Emergency Shelters

(a) Scope. This section sets forth standards, requirements and procedures for the design, installation, operation and maintenance of *premises* or parts thereof that are operated and/or occupied, on a temporary basis, to provide emergency shelter for more than 15 persons.

(b) General Provisions

(1) Temporary use and occupancy of premises as emergency shelter. The provisions of this section shall apply to *premises*, or parts thereof, including but not limited to armories, auditoriums, community centers, gymnasiums, houses of worship and schools, that are not designed to be occupied as emergency shelter, but that are operated and/or occupied for such purposes for more than 15 persons more than 30 days in any year.

(2) Notification. Notification shall be made to the *Department of Buildings* and the Public Buildings Unit of the *Bureau of Fire Prevention* of the intent to operate and/or occupy any *premises* or part thereof as an emergency shelter for more than 15 persons, prior to commencing such use or occupancy.

(3) Compliance with the Building Code. Nothing contained in this section shall be deemed to excuse compliance with the Building Code. The *Department* and the *Department of Buildings* will resolve any issues arising from the application of the section to a particular *premises*.

(c) Design and Installation Requirements. *Premises*, or parts thereof, operated and/or occupied as an emergency shelter shall comply with the following design and installation requirements:

(1) Sprinkler system. The *premises*, or parts thereof, shall be protected throughout by a *sprinkler system* designed and installed in accordance with the *Building Code*. Activation of the *sprinkler system* shall cause an alarm to be transmitted to an *approved central station* and sound an alarm throughout the *premises*.

(2) Fire alarm system. The *premises* shall be equipped with a *fire alarm system* designed and installed in accordance with the *Building Code* and provided with:

(A) an *approved fire command center* at an *approved* location;

(B) an *approved* system of smoke detectors that, upon activation, will cause an alarm to be transmitted to an *approved central station* and sound an alarm throughout the *premises*; and

(C) an *approved* one-way voice communication system capable of making announcements from the *fire command center* to all parts of the *premises*.

(3) Emergency lighting. The *premises*, or part thereof, shall be equipped with emergency lighting in accordance with the *Building Code*.

(4) Means of egress. The *premises*, or part thereof, shall be operated and/or occupied so as not to be overcrowded and to ensure adequate means of egress, including:

(A) The emergency shelter shall provide a livable area of not less than 80 square feet per shelter occupant.

(B) Adequate aisle space shall be maintained throughout the emergency shelter. Aisles shall not be less than 36 inches in width, except that cross aisles shall not be less than 48 inches in width.

(C) *Means of egress* shall be provided that are:

(*1*) sufficient in number.

(*2*) remote from one another.

(*3*) arranged to open in the direction of exit travel.

(*4*) equipped with panic hardware.

(*5*) equipped with doors that are self-closing device.

(*6*) maintained unobstructed and unimpeded, and unlocked in the direction of egress at all times.

(5) Additional areas protected. The *Department* may require that the fire protection and life safety systems specified in this section be extended to other parts of the *premises* if the use and occupancy of the *premises* as an emergency shelter presents an increased fire safety risk to other parts of the *premises*.

(d) Operational and Maintenance Requirements. *Premises* operated and/or occupied as an emergency shelter shall comply with the following design and installation requirements:

(1) Smoking prohibited. It shall be unlawful to smoke in any *premises*, or part thereof, being operated and/or occupied as an emergency shelter.

(2) Storage and removal of combustible waste. The emergency shelter shall be provided with noncombustible combustible waste containers with tight fitting lids. At least one (1) container shall be provided for each 50 persons in each occupied area of the emergency shelter, but not less than two (2) containers shall be provided in each sleeping area, dining area and other gathering place. Combustible waste containers shall be regularly emptied and shall not be allowed to overflow. Combustible waste awaiting collection shall be stored outdoors in accordance with FC304.4, or indoors in a separate locked room protected by a *sprinkler system* located on the ground floor.

(3) Fire safety and evacuation plan. Pursuant to FC404.2.1 and R404-01, a *fire safety and evacuation plan* shall be prepared and submitted to the *Department* for approval.

(4) Fire drills. Pursuant to FC405, fire drills shall be conducted at least monthly on each shift, and *FSP staff* training at least one (1) hour quarterly on each shift.

(5) Staff identification. Emergency shelter staff shall be readily identifiable at all times while on duty by means of an *approved* identification (such as a uniform, cap, nameplate, or armband).

(6) Fire watch. Pursuant to FC401.6.8.3, all parts of *premises* operated and/or occupied as an emergency shelter, including sleeping areas, shall be continuously patrolled by a person holding a *certificate of fitness*. An *approved* method of supervising the conduct of the fire watch, such as a watchman's clock and key stations, shall be provided.

(7) Below grade areas. Below grade areas shall not be used for sleeping purposes. Below grade areas that are not protected throughout by a *sprinkler system* shall not be used for lounges, recreation rooms, or other gathering places.

(8) Decorations. *Decorations* shall comply with the requirements of FC805.

(9) Portable fire extinguishers shall be provided in accordance with FC 906.

(10) Signage. Durable, legible signs shall be securely and conspicuously posted as follows:

(A) Exit signs. Exit signs in accordance with the *Building Code*, including BC1011.

(B) Stairwell identification signs. Stairwell floor number and stairwell identification signs in accordance with the *Building Code*, including BC1019.1.7.

(C) Elevator identification and emergency signs. Elevator identification and emergency signs in accordance with the *Building Code*, including BC3002.3.

(D) Sleeping room signs. Signs in sleeping rooms in accordance with the *Building Code*, including BC1026.10.

(E) Fire emergency reporting. Signage shall be provided in compliance with the requirements of FC408.14.

(F) Other signage. Such other signage that may be required by BC1026.

(11) Recordkeeping. A record shall be maintained at the fire command center or other approved location, and made available for inspection by any representative of the *Department*, of all fire safety-related activities, including but not limited to:

(A) Fire watch patrols;

(B) Cleaning of commercial cooking filters and ducts;

(C) *Standpipe*/*sprinkler system* inspection, testing and servicing;

(E) *Fire alarm system* inspection, testing and servicing;

(F) Fire department connection testing;

(G) Smoke detector inspection, testing and servicing;

(H) Portable fire extinguisher inspection, testing and servicing;

(I) Emergency lighting testing and servicing;

(J) Conduct of fire drills and *FSP staff* training; and

(K) Proof of flame-resistant *decorations*.

§ 902 Reserved

§ 903-01 Flow Testing of Residential Sprinkler Systems

(a) Scope. This section sets forth standards, requirements and procedures for flow testing of *sprinkler systems* in buildings, or parts thereof, classified as *Occupancy Group R-2* and certain other residential occupancies. This section applies to all such *sprinkler systems*, including *sprinkler systems* that only protect a part of the building or space, such as compactor *sprinkler systems*.

(b) Definition. The following term shall, for purposes of this section and used elsewhere in the rules, have the meanings shown herein:

Inspector's Test Connection. A pipe with a diameter of not less than one (1) inch, that is connected to the *sprinkler system* on the uppermost story of the building, at the end of the most remote branch line, to which is attached a valve that discharges the flow of water equivalent to one (1) sprinkler head of a type having the smallest orifice installed in the system.

(c) General Provisions

(1) Flow testing of sprinkler systems. *Sprinkler systems* in buildings or parts thereof, classified as *Occupancy Group R-2* (including *sprinkler systems* in apartment houses, apartment hotels and other residential buildings with three (3) or more dwelling units that are primarily occupied for the shelter and sleeping accommodation of individuals on a month-to-month or longer-term basis), and in every converted dwelling, or every tenement used, in whole or in part, for single room occupancy, regardless of occupancy classification, in which a *sprinkler system* has been installed pursuant to the requirements of the New York State Multiple Dwelling Law, shall be flow tested in compliance with the requirements of FC903.5.1 and 903.5.2 and this section.

(2) Scheduling. Flow tests shall be scheduled on behalf of the *owner* by the *plumber* or master fire suppression contractor who is to conduct the test.

(3) Other flow testing. The procedure and standard set forth in this section for required *sprinkler system* flow tests shall not be construed to prohibit an *owner* of a *sprinkler system* from conducting any other lawful flow test of such a system. The provisions of this section shall not be applicable to any such other flow test,

except for the provisions governing the reporting and correction of *sprinkler systems* that fail flow tests.

(4) Frequency. *Sprinkler systems* shall be flow tested annually, except that in buildings other than converted dwelling, or tenements used in whole or in part for single room occupancy, such system may be flow tested once every 30 months, provided that the pressure gauge located at or near the *inspector's test connection* is checked during the required monthly inspection to make certain that the system design pressure is being maintained.

(5) Witnessing. A flow test of a *sprinkler system* shall be witnessed by a representative of the *Department* at least once every five (5) years. Fees for such witnessed test shall be as set forth in FC A03.1(20).

(6) Reporting of required flow tests. The initial flow test result reported to the *Department* shall include a copy of the installation contractor's Department of Buildings B Form FP85.

(7) Reporting of other flow tests. The result of a flow test not required by this section shall be reported to the *Department* in accordance with R903-01(e) to the extent required by such section.

(d) Flow Test Procedure and Standard

(1) The flow test required by this section is intended to ascertain whether there is sufficient pressure in the *sprinkler system* to ensure the flow of water in the event the system is activated. The flow test shall be conducted in the following manner:

(A) All control valves on the system, including the main supply control valves, shall be inspected and determined to be sealed in the "open" position either by an approved wire and seal or a lock and chain.

(B) The flow test shall be conducted using an *inspector's test connection*. Such *inspector's test connection* shall be installed in accordance with the *Building Code*. If a *sprinkler system* is not provided with an *inspector's test connection*, such test connection shall be installed in accordance with the *Building Code* prior to conducting any required flow test.

(C) The contractor's testing apparatus shall be attached liquid tight to the *sprinkler system inspector's test connection*. The contractor's testing apparatus shall consist of:

(*1*) an adapter that connects to the *inspector's test connection* valve;

(*2*) a calibrated pressure gauge with at least a two (2) inch diameter dial graduated in *psi* to at least twice the static pressure of the *sprinkler system*; and

(*3*) a valve and a length of hose suitable to drain the discharged water to a safe location.

(D) The *inspector's test connection* valve shall be opened, the contractor's testing apparatus valve shall be closed and the static pressure indicated on the *inspector's test connection* pressure gauge, if provided, and the contractor's testing apparatus pressure gauge recorded.

(E) The contractor's testing apparatus valve shall be fully opened allowing water to discharge from the system until the water runs clear, but in no event shall less than ten (10) gallons be discharged.

(F) The contractor's testing apparatus valve shall be closed and the static pressure indicated on the *inspector's test connection* pressure gauge, if provided, and the contractor's testing apparatus pressure gauge recorded.

(2) A *sprinkler system* shall be determined to have passed the flow test if:

(A) the static pressure indicated on the contractor's testing apparatus pressure gauge before and after draining the water is unchanged when all control valves are sealed in the open position;

(B) the contractor's testing apparatus pressure gauge indicates a pressure of at least 15 *psig* or the pressure required by hydraulic calculations, whichever is greater;

(C) the *inspector's test connection* pressure gauge, if provided, and the contractor's testing apparatus pressure gauge readings recorded, as required in R903-01(d)(1)(D) and (d)(1)(F), are similar.

(D) there is no other indication that the *sprinkler system* is not in perfect working order.

(e) Flow Testing Reporting Requirements

(1) Reporting of successful flow tests. When a *sprinkler system* passes a flow test required by this section, the plumber or master fire suppression contractor conducting such flow test shall certify that all control valves associated with the *sprinkler systems* covered by the report have been identified, inspected and observed to be sealed in the open position by either an approved wire seal or chain and lock; that they conducted a flow test of such *sprinkler systems* in accordance with the procedures and standards specified in R903-01(d); that the

sprinkler systems passed the flow test in accordance with the criteria specified in R903-01(d); and that there is no other indication that the system is not in perfect working order. Such results shall be certified by completing a Residential Sprinkler System Flow Test Report in a form prescribed by the *Department* Such report shall be submitted to the *Department* and maintained for examination as follows:

(A) Residential Sprinkler System Flow Test Reports for flow tests that are not required to be witnessed by a *Department* representative shall be completed and mailed to the *Department* within five (5) business days after the completion of such test. Such mailings shall be addressed to:

New York City Fire Department
Bureau of Fire Prevention
9 MetroTech Center, 3rd Floor
Brooklyn, NY 11201-3857
Attn: Fire Suppression Unit.

(B) Residential Sprinkler System Flow Test Reports for flow tests witnessed by a *Department* representative shall be certified immediately upon completion of the flow test.

(C) The *owner* or managing agent of the building or space shall maintain a copy of each Residential Sprinkler System Flow Test Report for a period of not less than five (5) years from the test date. Such reports shall be maintained on the *premises* and made available for examination by any *Department* representative. Such reports shall be made available for examination by the occupants of the building or space during regular business hours.

(2) Reporting of unsuccessful flow tests. Any *sprinkler system* that fails a flow test, whether or not such test is required by this section, is in violation of the requirement of FC901.6 that such system be maintained in good working order at all times. The *owner* of such *sprinkler system* shall take immediate corrective action and shall continue such corrective action until such time as the *sprinkler system* passes a flow test conducted in accordance with the procedure and standard required by this section. If such corrective action cannot be completed and a successful flow test result obtained by the close of business of the same day, the *plumber* or master fire suppression contractor conducting such flow test shall notify the *Department* by telephoning the *Department* communications office (dispatcher) for the borough in which the *premises* is located. Nothing contained herein shall preclude the *Department* from taking enforcement action with respect to any *sprinkler system* that is not in good working order.

§ 904-01 Clean Agent Fire Extinguishing Systems Acceptance Testing

(a) Scope. This section sets forth standards, requirements and procedures for acceptance testing of *clean agent fire extinguishing systems*.

(b) General Provisions. Pursuant to FC 901.5 and 904, c*lean agent fire extinguishing systems* shall be inspected and tested before a representative of the *Department* prior to placing the system in operation, to ensure that such system is in good working order and operates as designed.

(c) Installation Acceptance Testing. Inspection and acceptance testing of *clean agent fire extinguishing systems* shall be conducted to determine whether the system functions in compliance with the requirements of FC904.10, NFPA 2001, and the following standards and requirements:

(1) All detection, discharge, alarms and other system components are in good working order.

(2) All piping is clear and unobstructed.

(3) Except as otherwise provided in Section 4-7.2.2.12 of NFPA 2001 (where the total piping contains no more than one change in direction fitting between the storage container and the discharge nozzle, and where all piping is physically checked for tightness), the piping shall be tested to confirm that it is capable to maintain the following pressures:

(A) the maximum anticipated pressure at discharge for a period of ten (10) minutes with a pressure loss not exceeding 15 percent of the test pressure; or

(B) the maximum anticipated pressure at discharge for a period of two (2) minutes with a pressure loss not exceeding three (3) percent of the test pressure; or

(C) 40 *psig* for a period of ten (10) minutes with a pressure loss not exceeding eight (8) *PSI*, after which the system shall be subjected to a discharge test.

(4) The enclosure protected by the *clean agent fire extinguishing system* shall be capable of maintaining the design *clean agent* concentration level for the required holding period. An integrity test in accordance with Appendix B of NFPA 2001 or a discharge test shall be conducted of such enclosure.

§ 905-01 Standpipe System Pressure Reducing Devices

(a) Scope. This section sets forth requirements for *standpipe system* pressure reducing devices.

(b) Definitions. The following terms shall, for purposes of this section and used elsewhere in the *rules*, have the meanings shown herein:

Pressure reducing devices. Devices, including valves, installed in *standpipe systems* at or near hose outlet connections that act to limit both the static and dynamic water pressures downstream of the standpipe outlet valve.

Pressure restrictors. Removable fittings or "SECO Type" valves that restrict flowing water pressures by reducing the available cross-sectional area of flow.

(c) General Provisions

(1) Certificate of approval. *Pressure reducing devices* installed in a *standpipe system* shall be of an approved type and for which a *certificate of approval* has been issued.

(d) Pressure Reducing Device Requirements.

(1) Location and pressure markings. Each *pressure reducing device* shall be permanently marked with the address of the *premises* in which it is installed, its floor location, and its designated pressure setting.

(2) Adjustments and reporting. Upon initial installation of a *pressure reducing device*, and at least once every three (3) years thereafter, a master fire suppression contractor shall file an affidavit with the *Department* on behalf of the building *owner* attesting to the following:

(A) The building address and *owner*'s name.

(B) The floor location of all *standpipe system pressure reducing devices* and the inlet pressure (static and operating) of each device.

(C) The setting of each device and the corresponding discharge flow rate (*gpm*), discharge pressure (*psig*), and the maximum outlet static pressure (*psig*).

(D) The name, address, and master fire suppression contractor license number of the person submitting the affidavit.

(3) Flow testing. Upon order of the *Commissioner*, but at least once every three (3) years, *standpipe systems* with *pressure reducing devices* installed shall be flow tested with a minimum actual flowing discharge of 250 *gpm*. These tests shall be conducted by a master fire suppression contractor who shall provide the

Department five (5) business days notice of the date and time of the test. The *Department* may witness these tests at its discretion.

§ 906 Reserved

§ 907-01 Fire Alarm Recordkeeping, Smoke Detector Maintenance, Testing and Recordkeeping, and the Prevention of Unnecessary and Unwarranted Fire Alarms

(a) Scope. This section sets forth standards, requirements and procedures for the operation and maintenance of *fire alarm systems* relating to fire alarm recordkeeping, *smoke detector* maintenance, testing and recordkeeping, and the prevention of *unnecessary* and *unwarranted alarms*.

(b) General Provisions

(1) Purpose. Pursuant to FC901.6, all *fire alarm system*s shall be maintained in good working order at all times. This section sets forth operating and maintenance requirements intended to minimize the number of *unwarranted* and *unnecessary alarms* transmitted by such systems that automatically transmit signals to the *Department* or a *central station*, including minimum *smoke detector* maintenance and testing requirements, the type and format of alarm and maintenance records to be kept and used in identifying defective smoke detectors and patterns of *unnecessary or unwarranted alarm* transmissions. Such alarms, which trigger an emergency response, are costly and endanger the public safety. This section sets forth the standard to which the *owners* (including lessees) of *premises* having such systems shall be held in regard to the transmission of such alarms.

(2) All *owners* shall comply with the requirements of this section and prevent *unnecessary* and *unwarranted alarms*.

(c) Prevention of Unnecessary and Unwarranted Alarms

(1) In any *premises* having a *fire alarm system* or a *smoke detector* that automatically transmits signals to the *Department* or a *central station*, the *owner* (including any lessee) of the *premises* shall be responsible for preventing the transmission of *unnecessary* or *unwarranted alarms*, and shall be liable for any violation of this section.

(2) It shall be unlawful to transmit two (2) or more *unnecessary* or *unwarranted alarms* in any three-month period, and it shall be unlawful to transmit any additional *unnecessary* or *unwarranted alarms* as set forth in R907-01(c)(4).

(3) The *owner* of any *premises* from which a second *unnecessary* or *unwarranted alarm* is transmitted in any three-month period will be subject to issuance of a *notice of violation*. Such *notice of violation* will afford the *owner* the opportunity to address the cause of the *unnecessary* or *unwarranted alarm* and to certify correction of the violation in accordance with R109-01(c), without having to appear for an *ECB* hearing and without imposition of a penalty.

(4) An *owner* issued a *notice of violation* pursuant to R907-01(c)(3) shall be liable for a violation of this section for any subsequent *unnecessary* or *unwarranted* alarm within six (6) months of the date of issuance of the *notice of violation.* Each such subsequent *notice of violation sh*all constitute a repeat offense pursuant to *Administrative Code* §15-229(a) and shall not be eligible for certification of correction without a hearing and penalty pursuant to R109-01(c). Each such subsequent *notice of violation* shall extend for an additional six (6) months the time the *owner* is liable for *unnecessary* or *unwarranted alarms* pursuant to this provision.

(5) An owner issued one (1) or more *notices of violation* pursuant to R907-01(c)(3) or (4) who does not transmit any *unnecessary* or *unwarranted alarm* within six (6) months of the date of issuance of the last-issued *notice of violation* shall be restored to compliant status and shall thereafter be subject to issuance of a *notice of violation* only for two (2) *unnecessary* or *unwarranted alarms* within a three-month period, as set forth in R109-01(c)(2).

(6) Nothing contained herein shall be deemed to preclude the Department from utilizing other means of enforcement with respect to *unnecessary* or *unwarranted alarms* that meet or exceed the number set forth in R907-01(c)(2).

(7) For purposes of this section, the malicious transmission of a false alarm by activation of a *manual fire alarm box* shall not be construed as an *unnecessary alarm*.

(d) Alarm Log Book

(1) The provisions of this section shall apply to any *premises* having a *defined fire alarm system*.

(2) The fire safety director, or in buildings not requiring a fire safety director, a person designated by the *owner*, shall be responsible to make all log book entries required by this section.

(3) An alarm log book shall be maintained on the *premises*, at the building's main fire alarm control panel. In the absence of a secure location at the main fire alarm control panel, the alarm log book may be secured during non-business hours in another area provided it is made available for inspection by any *Department* representatives responding to an alarm on the *premises*. Alarm log book entries

shall be made in chronological order, recording the location and causes of all *alarm signals* transmitted by such *fire alarm system*.

(4) The alarm log book shall be a bound book (other than spiral bound) with consecutively numbered and lined pages. The cover of the log book shall bear the inscription, "ALARM LOG BOOK", together with the name and address of the building. All entries shall be made in ink and dated. A separate log book shall be kept for each calendar year. Log books shall be retained for a period of three (3) years from the date of the last entry.

(5) The alarm log book shall be divided into three (3) separate sections as set forth below. Each section shall have a sufficient number of pages to allow for entries for at least one (1) year. The following log book entries are required and shall be made in each instance:

(A) Daily entries. The name of the person who made the entry, the *certificate of fitness* number of the fire safety director on duty, if applicable, and the time each tour of duty began and ended, shall be entered in the alarm log book on a daily basis. These entries shall be set forth in columns in the log book as follows:

(*1*) name

(*2*) *certificate of fitness* number

(*3*) time started

(*4*) time relieved

(B) System off-line entries. The date and time the alarm system was taken off-line, the reason for such action, the name and *certificate of fitness* number of the person notified at the *central station* (or other evidence of notification satisfactory to the *Department*), and the date and time the system was restored to service, shall be entered in the alarm log book in each such circumstance. These entries shall be set forth in columns in the log book as follows:

(1) time off line

(2) reason off line

(3) *central station* name and telephone number

(4) time restored

(C) Activated alarm entries. The date and time the alarm activated, the type and location of the device (e.g., *smoke detector*, 27th floor, elevator lobby), the probable cause of the alarm, and the *Department* unit and officer responding shall be entered in the alarm log book in each such circumstance. These entries shall be set forth in columns in the log book as follows:

(*1*) date and time activated

(*2*) location and detector type

(*3*) probable cause

(*4*) *Department* unit and officer

(D) Notification entries. The date and time of any notification to the occupants of the *premises* pursuant to FC Chapter 9 and R907-01(d), regarding a non-functioning or improperly functioning alarm system.

(e) Smoke Detector Maintenance and Recordkeeping

(1) Owner responsibility. The *owner* (including any lessee) of any *premises* monitored by a *defined fire alarm system* shall be responsible for the detector maintenance required by FC Chapter 9 and the *smoke detector* cleaning and testing required by this section.

(2) Certificate of fitness. The *smoke detector* cleaning and testing required by this section shall be performed by a person holding a *certificate of fitness* for *smoke detector* maintenance.

(3) Smoke detector maintenance company certificate. Such work shall be performed under the supervision of a company holding a *smoke detector maintenance company certificate*. All other *smoke detector* maintenance and testing shall be performed by a person possessing the requisite qualifications and experience, and any applicable license or certificate. Notwithstanding the foregoing, the *smoke detector* cleaning and testing required by this section may be performed by an *owner* of the *premises*, or an employee thereof, who possesses a *certificate of fitness* for *smoke detector* maintenance and the tools, instruments or other equipment necessary to perform *smoke detector* cleaning and testing required by this section.

(4) Smoke detector cleaning and testing

(A) All *smoke detector*s connected to a *defined fire alarm system* shall be cleaned and tested in compliance with the procedures set forth in the manufacturer's specifications and in NFPA 72, except that where such

procedures are inconsistent with the provisions of this section, the provisions of this section shall apply.

(B) All *smoke detector*s connected to a *defined fire alarm system* shall be:

(*1*) cleaned not less than once every six (6) months, except for analog (intelligent) *smoke detector*s, which shall be cleaned no later than one (1) week from receipt of an indication of the need for cleaning.

(*2*) tested for smoke entry not less than once a year.

(*3*) tested for sensitivity not less than once a year, except for analog (intelligent) *smoke detectors*, which shall be tested for sensitivity no later than one (1) week from receipt of an indication of the need for such testing.

(C) Any *smoke detector* not performing in conformance with the manufacturer's specifications or the standards set forth in NFPA 72 shall be re-calibrated, repaired or replaced, as required, in accordance with the manufacturer's recommendations and the requirements of said standard.

(5) Smoke detector maintenance recordkeeping

(A) The provisions of this section shall apply to any *premises* having a *defined fire alarm system*.

(B) A *smoke detector* maintenance log book shall be maintained on the *premises* in the office of the fire safety director, or, in buildings not requiring a fire safety director, in the building superintendent's office. Such log book shall state the total number of *smoke detectors* on the *premises* and list each *smoke detector* by location. Entries shall be made in such log book, in chronological order, regarding the installation, repair, maintenance and testing of the *smoke detector*s, and any signals transmitted by such detectors. Such entries shall include the date and nature of any inspection, cleaning, testing or calibration, and the name of the person and company performing such work, and any signal transmitted by analog (intelligent) *smoke detector*s communicating a need for cleaning and/or adjustment.

(C) The fire safety director, or in buildings not requiring a fire safety director, a person designated by the *owner*, shall be responsible to make all *smoke detector* maintenance log book entries required by this section.

(D) The *smoke detector* maintenance log book shall be a bound book (other than spiral bound) with consecutively numbered and lined pages. The cover of the log book shall bear the inscription, "SMOKE DETECTOR

MAINTENANCE LOG BOOK," together with the name and address of the building or occupancy. All entries shall be made in ink and dated. A separate log book shall be kept for each calendar year. Log books shall be retained for a period of three (3) years from the date of the last entry. A computer record that is designed to prevent or detect alteration of information and that is otherwise maintained in a manner acceptable to the *Department*, may be maintained in lieu of a bound log book provided that such computerized record is available on the *premises* for inspection by any *Department* representative during business hours.

(E) A copy of the *smoke detector* manufacturer's recommended maintenance procedures shall be kept with the *smoke detector* maintenance log book.

(f) Compliance with Other Laws, Rules and Regulations. Nothing contained in this section shall be construed to authorize any installation, alteration or repair of electrical wiring or other component of a *fire alarm system* that any other law or rule, including the *Electrical Code* or the *Building Code*, requires to be performed by a licensed electrician.

§ 908-911 Reserved

§ 912-01 Periodic Testing of Standpipe and Sprinkler Systems With Fire Department Connections

(a) Scope. This section sets forth standards, requirements and procedures for testing *standpipe systems* and *sprinkler systems* that have fire department connections.

(b) General Provisions

(1) Periodic testing. Upon order of the *Commissioner*, but at least once every five (5) years, the following tests shall be conducted, at the *owner*'s risk, by his or her representative before a representative of the *Department*:

(A) The entire *standpipe system* shall be subjected to a hydrostatic pressure test and a flow test to demonstrate its suitability for Fire Department use.

(B) *Standpipe system* and *sprinkler system* fire department connections shall be subjected to a hydrostatic pressure test to demonstrate their suitability for Fire Department use.

(2) The contractor shall have the system ready for test at the time of the appointment and shall have sufficient personnel present to conduct the test in a proper manner.

(3) All defects noted during the test must be corrected before the test can be approved.

(c) Standpipe Pressure and Flow Tests. *Standpipe systems* shall be tested in accordance with the following procedures:

(1) Hydrostatic test

(A) A pressure of 50 *psi* in excess of static pressure shall be applied to the entire system before replacing clappers in fire department connection check valves. Where intermediate tanks are provided, static pressure must be calculated from the roof tank.

(B) The test connection shall be made at the fire department connection.

(C) *Standpipe systems* shall not be tested using air or other pneumatic methods.

(2) Flow test

(A) No flow test shall be conducted when the outdoor ambient temperature is below 32°F.

(B) Shut off supply to system (gravity tank or street supply).

(C) Drain system at lowest outlet available.

(D) Remove all lower check valve clappers and then replace the bonnet.

(E) Connect a control valve to each fire department connection. The contractor shall provide a hose or make other provisions for draining of the water, so arranged as to hold the fire department connection clapper in an open position.

(F) Open the tank control valve or the street control valve and fill the entire system.

(G) Stretch the hose to curb or to a drain, and flush each fire department connection until water runs clear. Shut the water off as soon as it runs clear.

(3) System restoration

(A) Restore the system by replacing clappers in check valve, opening all control valves and filling the system.

(B) Properly vent all dead ends.

(C) Inspect drips after protection is restored, to check if the lower check valves are leaking.

(D) The contractor shall endeavor to ensure that the *standpipe system* is not out of service overnight. If it is impracticable to restore the system for Fire Department use, the *certificate of fitness* holder shall notify the *owner* or building manager and the *Department*, by telephoning the *Department* communications office (dispatcher) for the borough in which the *premises* is located. If the *certificate of fitness* holder is not present, the contractor shall make such notifications.

(d) Sprinkler System Pressure Test

(1) The fire department connections for a *sprinkler system* shall be hydrostatically pressure tested by applying a hydrostatic pressure of 100 *psig* directly to each fire department connection and satisfactorily maintaining such pressure for not less than 20 minutes. Fire department connections may be isolated from the *sprinkler system* in accordance with the following procedures:

(A) If the fire department connection check valve is of the flange type, a blind gasket or blank disc shall be installed between the flanges at the inlet (dry side) of check valve.

(B) If the fire department connection check valve is the screw type valve without flanges, the line at the dry side of check valve shall be cut and the end capped.

(C) When the test is completed, the blind gasket or blank disc shall be removed and flange gasket replaced. If the pipe was cut to conduct the test, it shall be provided with flanges after the test so that it can be used when future tests are conducted.

(D) After blind gaskets or blank disc are removed and piping is properly reconnected, a final test equal to city main pressure shall be applied to the fire department connection header to check that the flange connection is water tight.

(E) When the test is completed, the fire department connection header shall be drained and the drip valve left in good working order.

(F) When the fire department connections for perforated pipe systems are tested, the perforated branch lines shall be backed out and openings plugged.

(2) Pneumatic testing. *Sprinkler system* fire department connections shall not be tested using air or other pneumatic methods.

(3) System restoration

(A) If the fire department connection is isolated during the hydrostatic testing, the system shall be restored by removing plugs and reconnecting branch lines.

(B) The contractor shall endeavor to ensure that the *sprinkler system* is not out of service overnight. If it is impracticable to restore the system for Fire Department use, the *certificate of fitness* holder and/or *impairment coordinator* supervising such testing shall comply with the *out-of-service fire protection system* requirements of FC901.7, including notification to the *Department* by telephoning the *Department* communications office (dispatcher) for the borough in which the *premises* is located. If the *certificate of fitness* holder or *impairment coordinator* is not present, the contractor shall notify the *owner* or building manager and the *Department*.

§ 913-914 Reserved

CHAPTER 10
MEANS OF EGRESS

§1001-1024 Reserved
§1025-01 Fire Escape Window Gates and Similar Security Devices For Secondary Means of Egress and Emergency Escape and Rescue Openings
§1026-1027 Reserved

§ 1001-1024 Reserved

§ 1025-01 Fire Escape Window Gates and Similar Security Devices For Secondary Means of Egress and Emergency Escape and Rescue Openings

(a) Scope. This section sets forth standards, requirements and procedures for the design, installation, operation and maintenance of gates, bars, grilles, grates or similar devices placed over:

(1) windows and other openings onto fire escapes, as set forth in FC1025 and New York State Multiple Dwelling Law §53(1)(c);

(2) other required secondary *means of egress* in multiple dwellings, as set forth in New York State Multiple Dwelling Law §53(1)(c); and

(3) *emergency escape and rescue openings*, as set forth in FC1025.

(b) Definitions. The following term shall, for purposes of this section and as used elsewhere in the *rules*, have the meaning shown herein:

Window/egress gate. Any gate, bar, grille, grate or similar device placed over any window or other opening onto a fire escape, any required secondary *means of egress* in a multiple dwelling, or any *emergency escape and rescue opening*.

(c) General Provisions

(1) Compliance with provisions of law. All *window/egress gates* shall be designed, installed and maintained in compliance with the requirements of FC Chapter 10, the *Building Code* and the New York State Multiple Dwelling Law.

(2) Certificate of approval required. All *window/egress gates* shall be of a type for which a *certificate of approval* has been issued.

(d) Design and Installation Requirements. *Window/egress gates* shall be designed installed in a manner that:

(1) does not reduce the required dimensions of the window or other opening;

(2) does not prevent or impede the proper operation or free movement of the window or other opening;

(3) is without projections that can snag the clothing of those escaping through the opening;

(4) does not swing up to open;

(5) is readily openable from the inside of the building or structure with no more than one releasing operation, and without the use of a tool, key or special knowledge or effort;

(6) will readily open manually even if springs or other automatic actuating devices used to assist in the release operation do not operate properly or at all;

(7) unlatches upon the application of the following force:

(A) For finger-actuated or hand-actuated system, a force of not more than five (5) pounds.

(B) For foot-actuated systems, a force of not more than 15 pounds.

(C) For foot-actuated systems designed to be operated by a kick, a force of not more than the impact of swinging a 25-pound weight on a four-foot pendulum over a horizontal distance of ten (10) inches;

(8) once unlatched, opens upon the application of the following force:

(A) To set the *window/egress gate* in motion, a force of not more than 30 pounds.

(B) To open the *window/egress gate* to the minimum width of the opening, a force of not more than 15 pounds;

(9) attaches to the jamb of the window or other opening with standard wood or sheet metal screws only. No other fastening devices shall be used. The depth of the actual screw anchorage shall be no more than one (1) inch; and

(10) leaves one-quarter (¼) of an inch continuous space with a depth of at least three-quarters (¾) of an inch between the *window/egress gate* and the frame of the window or other opening for the entire height of the *window/egress gate*.

(e) Operational and Maintenance Requirements. *Window/egress gates* shall be operated and maintained in compliance with the following requirements:

(1) *Window/egress gates* shall not be obstructed in a manner that would prevent or impede access to, or the proper operation or free movement of, such device.

(2) *Window/egress gates* shall be maintained in good working order. They shall be checked for proper operation at least once every six (6) months.

(3) *Window/egress gates* shall be permanently marked, labeled or tagged with the *certificate of approval* number and the name, address and telephone number of the manufacturer.

(4) The manufacturer of the *window/egress gate* shall provide printed installation and operating instructions with each such device. Such instructions shall set forth how to install and initially test the *window/egress gate*, how to operate the *window/egress gate* in order to exit through the window or other opening, and any required periodic testing and maintenance. When the *window/egress gate* is installed by a person other than an occupant of the dwelling unit or other space in which such device is installed, or other end user, the installer shall provide a copy of such instructions to such occupant or other end user.

§ 1026-1027 Reserved

CHAPTER 11
RESERVED

CHAPTER 12
DRY CLEANING

§1201-1208 Reserved

§ 1201-1208 Reserved

CHAPTER 13
COMBUSTIBLE DUST-PRODUCING OPERATIONS

§1301-1304 Reserved

§ 1301-1304 Reserved

CHAPTER 14
FIRE SAFETY DURING CONSTRUCTION, ALTERATION AND DEMOLITION

§1401-01 Enforcement of Fire Safety at Construction Sites
§1402 Reserved
§1403-01 Portable Space Heaters Fueled By Piped Natural Gas at Construction Sites
§1404 Reserved
§1405-01 Crane Aerial Fueling Operations
§1406-1407 Reserved
§1408-01 Construction Site Fire Safety Manager
§1409-1418 Reserved

§ 1401-01 Enforcement of Fire Safety at Construction Sites

(a) Scope. This section sets forth requirements relating to the operation of *construction sites.*

(b) Cooperation with Department Inspections

(1) *Construction sites* are subject to regular inspection by the *Department*. Such inspections may include enforcement of *Construction Code* requirements pursuant to the authority granted to the *Department* by *Administrative Code* §28-103.1. Inspection frequency will be determined by the *Department* based on an assessment of the risks associated with the construction, alteration and/or demolition work being conducted. *Construction sites* at which a building more than 35 feet in height or with a footprint of more than 7,500 square feet is being constructed or demolished will be inspected by the *Department* at least once every 30 days when construction or demolition operations are in progress, unless the *Department's* risk assessment of the specific *construction site* indicates a heightened or diminished risk warranting a different inspection frequency.

(2) The *owner* of every *premises* upon which construction, alteration or demolition operations are being conducted, the construction manager, project manager, general contractor and any other person in charge of such *construction site*, shall cooperate with the *Department* in its inspections of the *construction site*, including providing or arranging for access to and around the *construction site*, inspection of records, and communication with the *owner* or his or her design professionals, managers or contractors, as necessary or appropriate. The fire safety manager, where required pursuant to FC1408, shall provide such assistance; or, where no fire safety manager is required, such assistance shall be provided by the liaison required by FC2703.9.1.1 in connection with the storage, *handling* or use of hazardous materials or other appropriate representative of the *owner*, construction manager, project manager or general contractor.

(c) General Requirements. The *owner* shall ensure fire safety on the *construction site* by monitoring and enforcing compliance with all applicable code and rule provisions, including but not limited to the following requirements:

(1) obtaining and maintaining on the site all required permits, certificates and recordkeeping, including the *Building Department* work permit and Fire Department *permits*, in accordance with *Administrative Code* §§ 28-105.1 and 28-105.11, FC Chapter 1 and other applicable provisions of the code and *rules*;

(2) provision and maintenance of elevators in readiness, in accordance with FC1411.3 and BC3303.12;

(3) provision and maintenance of *standpipe systems*, in accordance with FC1413 and BC3303.8;

(4) provision and maintenance of *sprinkler systems*, in accordance with FC1414 and BC3306.9.6;

(5) provision and maintenance of stairways and other required *means of egress*, in accordance with FC1027 and BC3303.11;

(6) provision and maintenance of an approved water supply for fire protection purposes prior to delivery of *hazardous materials* or combustible materials at the *construction site*, in accordance with FC1412;

(7) storage, *handling* and use of *compressed gases*, including *LPG* and *CNG*, in accordance with FC 1406, 3504.2, 3804.10 and 3809.12;

(8) storage, *handling* and use of *flammable liquids* and *combustible liquids*, including gasoline, diesel fuel, paint, varnishes and lacquers, and *cargo tank* vehicle fueling, in accordance with FC 1405 and 3406.2;

(9) storage, *handling* and use of *small arms ammunition* for powder-actuated tools, including nail and rivet guns, in accordance with FC1418;

(10) storage, *handling* and use of heating, drying and curing devices, including portable fueled space heaters, in accordance with FC1403, and the enforcement of the prohibition against *open fires*, in accordance with FC1404;

(11) conduct of *hot work* operations, including the provision of a *fire watch*, in accordance with FC 1404 and 2604;

(12) provision, maintenance and ready availability of portable fire extinguishers, in accordance with FC906;

(13) provision and maintenance of fire apparatus access, in accordance with FC1410;

(14) provision and maintenance of an emergency telephone, in accordance with FC1409;

(15) storage and removal of *combustible waste* from the *construction site*, in accordance with FC1404.2;

(16) enforcement of the prohibition against smoking on the *construction site*, in accordance with FC1404; and

(17) provision of a watchperson familiar with the location and use of firefighting equipment and location of emergency telephone and fire alarm boxes, when construction or demolition operations are not in progress, in accordance with BC3307.5.1 and FC1409.

§ 1402 Reserved

§ 1403-01 Portable Space Heaters Fueled By Piped Natural Gas at Construction Sites

(a) Scope. This section sets forth design, installation, operation and maintenance requirements for the storage, *handling* and use, at *construction sites*, of *portable space heaters* fueled by *piped natural gas*.

(b) General Provisions

(1) Prohibited operations. It shall be unlawful to store or use a *portable space heater* fueled by *piped natural gas* at a *construction site*:

(A) for human comfort or any purpose other than construction-related curing and drying;

(B) for construction-related curing and drying, without a *Department permit*;

(C) in any part of the building under construction that is occupied;

(D) in any part of the building under construction that is located within ten (10) feet of any opening in a wall of an occupied adjacent structure or building, or within 50 feet of any building occupied for educational, health care or religious purposes, place of public assembly or other place of public gathering;

(E) at any *construction site* at which there is no shut-off valve for the *piped natural gas* service installed outside of the building under construction in accordance with the requirements of the *Construction Codes*; or

(F) where pressure of supply to *piped natural gas* to the building under construction is more than one-half (½) *psig*.

(2) Smoking

(A) Pursuant to FC1404.1, it shall be unlawful to smoke at any *construction site*.

(B) It shall be unlawful under any circumstance to smoke within ten (10) feet of any *portable space heater* fueled by *piped natural gas*.

(c) Permits

(1) Permit required. A *permit* shall be obtained from the *Department* pursuant to FC105.6 prior to any storage or use of *portable space heaters* fueled by *piped natural gas* at a *construction site*.

(2) Permit applications. *Permit applications* shall be filed by the *owner*, or by a *registered design professional* or contractor on the *owner's* behalf, with the

District Office of the *Bureau of Fire Prevention*. The *permit application* shall include such information and documentation as the *Department* may require, including a completed *application* form and a copy of the work permit issued by the *Department of Buildings* (or other form of approval acceptable to the *Department*) authorizing the installation of temporary *natural gas* piping.

(d) Supervision.

(1) Use. *Portable space heaters* fueled by *piped natural gas* at a *construction site* shall be under the *personal supervision* of a *certificate of fitness* holder, whenever such heaters are in use.

(2) General. At all times other than when they are in use, p*ortable space heaters* fueled by *piped natural gas* at a *construction site* shall be under the *general supervision* of a *certificate of fitness* holder.

(3) Plumbers. Supervision of *portable space heaters* fueled by *piped natural gas* may be provided by a *plumber*, who shall perform all the duties required of the *certificate of fitness* holder by this section.

(e) Inspection

(1) Frequency. The *certificate of fitness* holder shall periodically inspect all p*ortable space heaters* fueled by *piped natural gas* at a *construction site*. Such inspections shall be conducted as frequently as needed to ensure the safe operation of the heaters, considering the nature and location of the curing or drying operation and surrounding activities at the *construction site*, but in no event less than once every four (4) hours. All p*ortable space heaters* fueled by *piped natural gas* that are connected for use but not in use, and all *natural gas* piping and equipment installed at the *construction site*, including the outdoor gas service line shut-off valve, shall be inspected at least once every work day.

(2) Purpose. The *certificate of fitness* holder or *plumber* shall ensure that all such appliances, piping and equipment are in a safe condition and proper working order and are otherwise installed, maintained and operated in compliance with the requirements of this section. Any appliance, piping or equipment that is not in a safe condition or proper working order shall be immediately disconnected, promptly removed from the *premises*, and not returned to service unless restored to a safe condition or good working order.

(3) Recordkeeping. A record of all inspections required by this subdivision, including any corrective action taken, shall be entered in a bound log book kept at the *construction site* and made available for inspection by any *Department* representative.

(f) Design and Installation Requirements

(1) Natural gas piping and control valves. In connection with the use of p*ortable space heaters* fueled by *piped natural gas* at *construction sites*:

(A) Temporary *natural gas* piping shall comply with all requirements of the *construction codes*.

(B) Temporary *natural gas* piping shall be installed in such a manner and at such locations as will minimize the risk of damage from the construction activity occurring at the *construction site*.

(C) Temporary *natural gas* piping shall be clearly marked "Natural Gas" at least once every 30 feet, and at least once in each room or other separate area.

(D) A shut-off valve shall be installed at each *natural gas* pipe outlet that is to be used for a *portable space heaters* fueled by *piped natural gas* with a flexible hose connection. A maximum of four (4) heaters may be connected to each such shut-off valve.

(E) All shut-off valves required by this section shall be hand operable and of the quarter-turn type.

(F) All valves required by this section shall be installed in unobstructed locations where they are clearly visible and readily accessible. Access shall be provided to any valve located more than seven (7) feet above floor level by means of a fixed or otherwise stable stair, ladder or platform.

(G) The outdoor gas service line shut-off valve shall be clearly marked with metal tags or in another permanent manner.

(H) Defective gas piping, tubing and fittings (including valves, strainers, filters) shall be replaced and not repaired. An adequate supply of spare parts and material shall be available on the *premises* for replacement.

(2) Portable space heaters fueled by piped natural gas. In connection with the use of *portable space heaters* fueled by *piped natural gas* at *construction sites*:

(A) *Portable space heaters* fueled by *piped natural gas* shall be *listed* and *labeled* as set forth in FC313.5.1.

(B) All electrical wiring and equipment associated with the use of *portable space heaters* shall be installed in conformance with the *Electrical Code*.

(C) Flexible hoses used for connecting *portable space heaters* fueled by *piped natural gas* to *natural gas* pipe outlets:

(*1*) shall be suitable for *natural gas* service and of a type designed for a working pressure of not less than 350 *psi*;

(*2*) shall not exceed 20 feet in length;

(*3*) shall be installed with a shut-off valve between the end of the hose and the heater;

(*4*) shall not pass through any walls, partitions, ceilings or floors, or any other concealed location;

(*5*) shall not extend from one room to another, except through an opening where the door has been removed or secured from movement, and shall not be installed in such other manner or at such other locations as would expose the hose to crimping, wear or damage or constitute a falling or tripping hazard;

(*6*) shall not be used for any other purpose; and

(*7*) shall be maintained in a safe condition.

(g) Operational Requirements. In connection with the use of *portable space heaters* fueled by *piped natural gas* at *construction sites:*

(1) *Portable space heaters* fueled by *piped natural gas* shall be:

(A) used only in well-ventilated areas;

(B) placed on a noncombustible foundation; and

(C) placed at a safe distance from combustible materials, including combustible building construction, in accordance with the approved use of the *portable space heaters* set forth in the acceptance of the *Department of Buildings* or the approval of the New York City Board of Standards and Appeals, the listing, and in accordance with the manufacturer's operating instructions; and

(D) placed at least 20 feet from *flammable liquids*, *combustible liquids* and *compressed gas containers*.

(2) When the curing or drying is to take place within a temporary enclosure, only noncombustible panels, flame-resistant tarpaulins or similar fire-retardant materials shall be used for such enclosure. The enclosure shall be secured from movement by wind or other causes. *Portable space heaters* fueled by *piped*

natural gas shall not be placed closer than ten (10) feet from any surface of the enclosure.

(3) Temporary lighting used in connection with curing or drying operations shall be equipped with heavy duty electrical cords and guards to prevent accidental contact with the bulb. Such lighting shall be removed from the area as soon as they are no longer needed.

(4) A portable combustible gas leak detector shall be readily available on the *premises*.

(5) At least one (1) copy of the manufacturer's operating and maintenance instructions for the *portable space heaters* fueled by *piped natural gas* shall be readily available at the *construction site*.

(h) Portable Fire Extinguisher Requirements. A portable fire extinguisher with at least a 20-B:C rating shall be provided on each floor of the *construction site* at a location not more than 30 feet from where a heater is in use or connected for use. A travel distance of up to 50 feet is allowed if a portable fire extinguisher with at least a 40-B:C rating is provided.

§ 1404 Reserved

§ 1405-01 Crane Aerial Fueling Operations

(a) Scope. This section sets forth requirements for the aerial fueling of cranes with diesel fuel or other *combustible liquids* at *construction sites* and other locations.

(b) General Provisions

(1) Permit. Pursuant to FC105.6, a *permit* is required for the storage, *handling* and use of *combustible liquids*, including the storage and *handling* of such liquids in connection with aerial fueling of cranes.

(c) Prohibitions. It shall be unlawful to:

(1) fuel a crane aerially with a *flammable liquid*.

(2) perform aerial fueling of a crane at a *construction site* while construction operations are being conducted.

(3) perform aerial fueling of a crane at a *construction site* when weather conditions such as wind speed or lightning make such operation unsafe.

(d) Supervision

(1) Aerial fueling operations. Aerial fueling of cranes at a *construction site* shall be under the *personal supervision* of a *certificate of fitness* holder.

(2) Portable tanks. *Portable tanks* used for aerial fueling shall be under the *general supervision* of a *certificate of fitness* holder prior to each use for aerial fueling, to ensure that the *portable tank* is in a safe condition and ready for such use.

(e) Portable Tanks. The *portable tank* and tank assembly shall be designed and installed in compliance with the following requirements:

(1) Capacity. The capacity of the *portable tank* for fueling shall not exceed 550 gallons.

(2) Construction. The tank shall be of *approved*, steel construction, and be designed with sufficient structural strength to allow it to be repeatedly lifted for aerial fueling operations.

(3) Lifting. The *portable tank* assembly shall be provided with a sufficient number of lifting lugs capable of safely supporting the weight of the tank and stored fuel when full, and allow the tank to be maintained in a level position during lifting and fueling operations.

(4) Hose. The connecting hose of the *portable tank* shall be of a braided flexible steel type, and provided with a breakaway coupling capable of retaining fuel on both sides of the shear section. The length of the hose shall not exceed 30 feet.

(5) Shut-off valves. The connecting hose of the *portable tank* shall be provided with shut-off valves at the tank and at the nozzle. The shut-off valve at the nozzle side of the hose, used for the final control of the flow, shall be of a self-closing type and shall be manually held open during dispensing operation.

(6) Nozzles. The end of the nozzle shall be threaded and provided with a liquid-tight cap while hoisting.

(f) Operational Requirements

(1) Inspection of fueling equipment. Prior to aerial fueling operations, the *portable tank*, hose, valves and all other devices and equipment used to conduct the operation shall be inspected at the *construction site* to ensure that they are in good working order.

(2) Method of discharge. The aerial fueling operation shall be conducted under gravity discharge by hoisting a *portable tank* to an elevation above the crane's fuel tank.

(3) Weather conditions. Reliable means for monitoring weather conditions, including wind speed and approaching storms, shall be readily available.

(4) Communication. Radio and/or other two-way wireless communication shall be maintained between the crane operator and all other personnel involved in the aerial fueling operation.

(5) Fueling of crane. After the *portable tank* is lifted to the elevation required, and prior to commencing the crane aerial fueling:

(A) The engine of the crane being fueled shall be shut off.

(B) The *portable tank* shall be grounded to the crane structure.

(C) The *portable tank* shall be secured to the crane structure with a chain shorter than the hose length that is capable of restraining the portable tank during the aerial fueling operation.

§ 1406-1407 Reserved

§ 1408-01 Construction Site Fire Safety Manager

(a) Scope. This section sets forth standards, requirements and procedures for the supervision of fire safety at a *construction site* by a fire safety manager designated pursuant to FC1408.1.

(b) General Provisions

(1) Designation of fire safety manager. Pursuant to FC1408.1, a fire safety manager shall be designated by the *owner* at any *construction site* for which the *Building Code* requires a site safety manager or site safety coordinator pursuant to BC3310.5. The fire safety manager shall perform the duties and responsibilities set forth in FC1408.1 and this section. The name and *certificate of fitness* number of the fire safety manager (and any alternate fire safety managers) shall be entered in the logbook required by FC1408.1 to be maintained at the *construction site*.

(2) Certificate of fitness. The fire safety manager at a *construction site* shall hold a *certificate of fitness* for such purpose.

(c) Supervision of Construction Site Fire Safety

(1) Fire safety manager duties and responsibilities. Pursuant to FC1408.1, the fire safety manager is responsible for ensuring that the construction, alteration and

demolition work at a *construction site* is conducted in compliance with the requirements of the Fire Code and the *rules*. Such supervision shall include, but is not limited to:

(A) authorizing, supervising and/or monitoring materials, operations and *facilities* regulated by the Fire Code;

(B) in accordance with FC1408.1, regularly inspecting the *construction site* for fire safety purposes, including compliance with the code and *rule* provisions set forth in R1401-01(c), 1403-01 and 1405-01;

(C) performing the duties of the *impairment coordinator* required by FC901.7, the *responsible person* required by FC2603.2.2, and the Fire Department liaison required by FC2703.9.1.1, or ensuring that such persons are designated and monitoring the performance of their duties;

(D) providing or arranging *Department* access to the *construction site*, inspection of the logbook and other records, and communication with the *owner* or his or her *design professionals*, managers or contractors, in accordance with R1401-01(b)(2); and

(E) taking all other actions that a prudent person trained and knowledgeable in *construction site* fire safety would take to ensure that fire safety is maintained at the *construction site*, given site conditions.

(2) Presence at construction site. The fire safety manager shall be present at the *construction site* at all times when construction, alteration and demolition work is being conducted. The fire safety manager shall sign in the logbook required by FC1408.1 at the beginning and end of each workday. An alternate fire safety manager shall assume the duties and responsibilities of the fire safety manager whenever the fire safety manager is required to be present at the *construction site* but is absent.

(d) Obligations of Construction Site Personnel. All persons present on a *construction site*, including contractors, subcontractors and their employees, shall cooperate with, and comply with the directions of, the fire safety manager in authorizing, supervising and/or monitoring materials, operations and *facilities* regulated by the Fire Code, or otherwise carrying out the duties and responsibilities of a fire safety manager, as set forth in FC1408 and this section.

(e) Recordkeeping. A record of the periodic inspection of the *construction site* required by FC1408.1, and other duties and responsibilities performed each day by the fire safety manager, shall be maintained in accordance with the provisions of that section. Entries shall be made for any conditions not in compliance with the applicable code and *rule* requirements, when such conditions could not be timely corrected, and the notifications made. The logbook required by FC1408.1 used to maintain such records shall be

separate and distinct from the any log required to be maintained by the *Building Code*, including BC 3310.7 and 3310.8.4.

§ 1409-1418 Reserved

CHAPTER 15
FLAMMABLE FINISHES

§1501-1511 Reserved

§ 1501-1511 Reserved

CHAPTER 16
FRUIT AND CROP RIPENING

§1601-1607 Reserved

§ 1601-1607 Reserved

CHAPTER 17
FUMIGATION AND INSECTICIDAL FOGGING

§1701-1702 Reserved
§1703-01 Fumigation and Insecticidal Fogging

§ 1701-1702 Reserved

§ 1703-01 Fumigation and Insecticidal Fogging

(a) Scope. This section sets forth standards, requirements and procedures for *fumigation* and *thermal insecticidal fogging*, and insecticidal fogging without the application of heat.

(b) General Provisions. *Fumigation* and insecticidal fogging operations shall be conducted in compliance with the requirements of FC 1701 and 1703 and this section.

(c) Supervision. *Fumigation* and insecticidal fogging operations, including insecticidal fogging without the application of heat, shall be supervised by a company holding a

fumigation and thermal insecticidal fogging operation company certificate, and conducted by individuals holding a *certificate of fitness* as set forth in FC 1701.4.1 and 1701.4.2.

(d) Operational Requirements for Fumigation and Insecticidal Fogging Operations

(1) Fog generators, except approved portable types, shall be operated outdoors.

(2) Building occupants in the building to be fumigated, except the personnel conducting the *fumigation*, shall be evacuated prior to commencing *fumigation* operations.

(3) Building occupants in the space to be fogged, except the personnel conducting the insecticidal fogging operations, shall be evacuated from such space prior to commencing fogging operations.

(4) All openings to the space to be fumigated or fogged shall be kept securely closed.

(5) The temperature gauge of fog generator used for *thermal insecticidal fogging* shall be read at frequent intervals. If the temperature rises above normal operating temperature, the generator shall be shut down immediately and the necessary adjustment made. When liquids having a *flash point* are used, the liquid in the fog generator shall have a *flash point* at least 40°F higher than the surrounding temperature of the area to be fogged.

(6) The dryness of the fog shall be checked before beginning the *thermal insecticidal fogging* operations. Wet fog shall not be used for *thermal insecticidal fogging* unless the fogging liquid has no *flash point*.

(7) When liquids having a *flash point* are used, no more than one (1) gallon of fogging liquid shall be used for each 50,000 cubic feet of space to be fogged. The fog shall not be allowed to expel directly against any combustible material.

(e) Portable Fire Extinguisher Requirements. A portable fire extinguisher with at least a 20-B rating shall be provided and kept readily accessible during *fumigation* or insecticidal fogging operations.

(f) Notifications. Notification to the *Department* of *fumigation* and *thermal insecticidal fogging* in accordance with FC1703.3 shall be made to the local fire company. Notification is not required for insecticidal fogging not involving the application of heat.

CHAPTER 18
SEMICONDUCTOR FABRICATION FACILITIES

§1801-1805 Reserved

§ 1801-1805 Reserved

CHAPTER 19
LUMBER YARDS AND WOOD WASTE MATERIALS

§1901-1909 Reserved

§ 1901-1909 Reserved

CHAPTER 20
MANUFACTURE OF ORGANIC COATINGS

§2001-2009 Reserved

§ 2001-2009 Reserved

CHAPTER 21
INDUSTRIAL FURNACES

§2101-2107 Reserved

§ 2101-2107 Reserved

CHAPTER 22
MOTOR FUEL-DISPENSING FACILITIES AND REPAIR GARAGES

§2201-2203	Reserved
§2204-01	Self-Service Automotive Liquid Motor Fuel-Dispensing Facilities
§2205-01	Underground Liquid Motor Fuel Storage Tanks at Motor Fuel-Dispensing Facilities
§2206-01	Design and Installation of Liquid Motor Fuel-Dispensing Systems at Motor Fuel-Dispensing Facilities
§2206-02	Leak Detection System Functionality Testing
§2207	Reserved
§2208-01	Mobile Compressed Natural Gas Motor Fuel Systems
§2208-02	Self-Service Compressed Natural Gas Motor Fuel-Dispensing Facilities
§2209-2210	Reserved
§2211-01	Repair Garages For Vehicles Fueled by Lighter-Than-Air Fuels

§ 2201-2203 Reserved

§ 2204-01 Self-Service Automotive Liquid Motor Fuel-Dispensing Facilities

(a) Scope. This section sets forth requirements for the operation and maintenance of *self-service automotive liquid motor fuel-dispensing facilities*.

(b) General Provisions

(1) Facility operation and maintenance. All *self-service automotive liquid motor fuel-dispensing facilities* shall be operated and maintained in accordance with FC Chapter 22 and this section.

(c) Operational and Maintenance Requirements

(1) Movement of motor vehicles. The *facility* shall be operated so that movement of *motor vehicles* is orderly and consistent with the safe operation of the *facility*.

(2) Repairs. *Motor vehicles* shall not be repaired in dispensing areas.

(3) Control booth requirements

(A) Housekeeping. The control booth shall be kept clean and orderly. The glass panels of the control booth shall be kept clean and unobstructed at all times. Access to the controls in the booth shall be kept unobstructed by equipment, merchandise or litter.

(B) Operating manual. An operating manual consisting of a copy of this section, emergency procedures, and *facility* operating procedures (including the operation of the *fire extinguishing system*) shall be maintained in the control booth.

(C) Portable fire extinguisher requirements. In addition to the portable fire extinguishers required by FC2205.5 to be provided in the dispensing area, two (2) portable fire extinguishers with at least a 40-B:C rating shall be provided within the control booth.

(4) Daily inspections. The *certified attendant* shall conduct an inspection of the *facility* on at least a daily basis, and document such inspection in the log book required by R2204-01(c)(5). The inspection shall verify that:

(A) The *fire extinguishing system* is properly pressurized, nozzles are clear and unobstructed, and heat detectors are undamaged and unobstructed.

(B) Portable fire extinguishers have been serviced and have adequate pressure.

(C) The *fire extinguishing system* remote manual pull station and the pump shutdown are clear of obstructions.

(D) Leak detection systems and other alarms are in good working order.

(E) Emergency procedures signage is posted, unobstructed and legible.

(F) Required lighting is in good working order.

(G) Any mirrors and/or *approved* closed-circuit television used to monitor dispensing operations are in good working order.

(H) The voice communications system is in good working order.

(5) Maintenance log book. A maintenance log shall be kept on the *premises* for inspection by any *Department* representative. Such log shall list all *certified attendants* and other persons on the *premises* who hold *certificates of fitness*, with their numbers and expiration dates. Entries shall be made in such log book of the daily inspections required by this section, any maintenance or repair of any system, and any *fires*, spills or other unusual occurrences.

(6) Fuel Dispensing

(A) The *certified attendant* shall not dispense *liquid motor fuel* into a portable *container* in quantities requiring a *permit* unless the *certified attendant* verifies that the customer possesses all such *permits*.

(B) Persons dispensing *motor fuel* at a self-service *motor fuel-dispensing facility* shall hold a valid driver's license or be at least 18 years of age. The *certified attendant* or other *facility* personnel may require any member of the public to produce evidence of same.

§ 2205-01 Underground Liquid Motor Fuel Storage Tanks at Motor Fuel-Dispensing Facilities

(a) Scope. This section sets forth standards, requirements and procedures for the maintenance of underground motor fuel storage tanks at *liquid motor fuel-dispensing facilities*.

(b) General Provisions. Underground storage tanks for *liquid motor fuel* at *liquid motor fuel-dispensing facilities* shall be periodically inspected, tested and otherwise maintained in accordance with FC2205 and this section.

(c) Periodic Maintenance Requirements. Underground storage tanks at *liquid motor fuel dispensing facilities* shall be maintained in accordance with the following procedures:

(1) Overfill prevention devices. The overfill prevention devices required by FC2206.10(18) shall be inspected for proper operation at least once every two (2) years by a person holding a *certificate of license*. Records of such inspection shall be maintained on the *premises* as set forth in FC107.7.

(2) Cathodic protection systems. Tanks and piping systems provided with cathodic protection systems shall be inspected, tested and otherwise maintained to ensure continuous corrosion protection. Cathodic protection systems shall be inspected for proper operation by a trained person knowledgeable of the requirements of the United States Environmental Protection Agency for such systems. Cathodic protection systems other than impressed current cathodic protection systems shall be inspected within six (6) months of installation and at least once a year thereafter. Impressed current cathodic protection systems shall be inspected at least once every 60 days.

(3) Leak detection systems. Leak detection systems shall be inspected for proper operation at least once a month by a *certificate of fitness* holder responsible for the supervision of the motor fuel-dispensing facility.

§ 2206-01 Design and Installation of Liquid Motor Fuel-Dispensing Systems at Motor Fuel-Dispensing Facilities

(a) Scope. This section sets forth standards, requirements and procedures for the design, installation, and installation acceptance testing of the following devices, equipment and systems at *liquid motor fuel-dispensing facilities*:

(1) cathodic protection systems and coatings for underground storage tanks and piping; and

(2) *liquid motor fuel* dispensers and pumps.

(b) General Provisions. Cathodic protection systems and motor fuel dispensers and pumps at *liquid motor fuel-dispensing facilities* shall be designed and installed in accordance with FC Chapter 22 and this section.

(c) Cathodic Protection Systems. Cathodic protection systems for underground storage tanks and piping for *liquid motor fuel* at *liquid motor fuel-dispensing facilities* shall be designed and installed in compliance with the following requirements:

(1) Steel storage tanks and piping systems shall be protected against exterior corrosion by either a sacrificial anode or an impressed current cathodic protection system designed in accordance with the applicable National Association of Corrosion Engineers (NACE) standard or other *approved* standard. Such system shall be designed to provide corrosion protection for not less than 30 years.

(2) Tanks protected by sacrificial anodes shall be electrically isolated from the piping system.

(3) Cathodic protection systems shall be designed by a trained person knowledgeable of the requirements of the United States Environmental Protection Agency for such systems. Such person shall first inspect the site and test the site for soil resistivity and the presence of stray currents. Such cathodic protection systems shall be installed under the *personal supervision* of such person.

(4) Cathodic protection systems shall be inspected and tested in the presence of a representative of the *Department* at the time of installation in compliance with the applicable National Association of Corrosion Engineers standard and the following procedures:

(A) All piping shall be subjected to a holiday test and tanks and associated piping shall be subjected to an electrical continuity test. Any holiday located during a spark test shall be repaired as per coating specifications before the tank or piping excavation is backfilled.

(B) Upon completion of the underground motor fuel storage tank installation, the following information and documentation shall be submitted to the *Department*:

(*1*) An "as-built" drawing showing number, size (weight) and location of all anodes and test stations.

(*2*) An affidavit in a form satisfactory to the *Department*, executed by the person who designed and supervised the installation of the cathodic protection system, setting forth the type of cathodic protection system installed, a description of the system and its location, the date of final inspection of the installed system, and such person's certification that the system has been installed and is functioning properly and that the system is designed to provide corrosion protection for at least 30 years.

(d) Coatings. Coatings steel underground storage tanks and piping at motor fuel-dispensing facilities shall be designed and installed in compliance with the following requirements:

(1) Types of coatings. Steel tanks shall be factory-coated with a dielectric material acceptable to the *Department*. The coating's coefficient of thermal expansion must be compatible with steel so that stresses due to temperature changes do not affect the soundness of the coating and the permanent bond which exists between the coating and the steel. The coating must be of sufficient density and strength so that it will not crack, wear, soften or disbond under normal service conditions. The coating must be stable under adverse underground electrolytic conditions and shall be chemically resistant to the products stored. The coating shall have been factory inspected for air pockets, cracks, blisters and electrically tested with a holiday detector at a minimum of 10,000 volts for coating defects such as pinholes.

(2) Site inspection. All coated tanks shall be inspected on site for coating defects prior to installation. An affidavit attesting to the integrity of the tank coating shall be submitted by a *certificate of license* holder upon the request of the *Department*.

(e) Dispensers and Pumps. Upon completion of the installation of a motor fuel dispenser or motor fuel-dispensing pump, such dispenser and pump shall be tested for proper operation by a *certificate of license* holder. All readily accessible piping shall be inspected for any evidence of leaks. An affidavit executed by such installer attesting to compliance with this requirement shall be submitted to the Bulk Fuel Unit of the *Bureau of Fire Prevention*.

§ 2206-02 Leak Detection System Functionality Testing

(a) Scope. This section sets forth standards, requirements and procedures for the periodic testing of underground *liquid motor fuel storage and dispensing systems* leak detection systems pursuant to FC2206.9.3.

(b) General Provisions

(1) Frequency. Pursuant to FC2206.9.3, a functionality test of the leak detection system shall be conducted, at the *owner*'s risk, before a representative of the *Department* at least once every two (2) years.

(2) Supervision. The leak detection system functionality test shall be conducted by a holder of a *certificate of license* for *liquid motor fuel storage and dispensing systems*, or a person employed and supervised by such *certificate of license* holder. The individual conducting the test shall remain on the *premises* while

such test is being conducted and until the system has been returned to normal operation in accordance with R2206-02(c)(5). The *Department* may require individuals performing such leak detection test to be trained and/or certified by the manufacturer to conduct such test. Upon request, proof satisfactory to the *Department* shall be submitted attesting to the individual's training/certification for such leak detection system.

(3) Scheduling. A leak detection system functionality test shall be scheduled with the Bulk Fuel Unit of the *Bureau of Fire Prevention.*.

(4) Fire extinguishing system operational. No leak detection system functionality test shall be conducted if the *fire extinguishing system* required to protect the dispensers is out-of-service or not in good working order.

(5) Smoking and ignition sources. All sources of ignition in the test area shall be eliminated from the area in which a leak detection system functionality test is to be conducted. Signs reading "NO SMOKING - NO OPEN FLAMES" shall be conspicuously posted in such area.

(6) Testing area security. The areas surrounding the dispensers, tanks or other equipment or systems tested shall be cordoned off by portable barricades or signs, rope or tape to prevent unauthorized persons or *motor vehicles* from entering the area.

(7) Electrical equipment. All electrical equipment used for testing shall be of a type listed as intrinsically safe or suitable for use in hazardous locations. Interlocks shall be provided to ensure that grounding is made prior to electrical contact. Power to electrical equipment shall not be turned on until all electrical connections are made. Connection to power source shall be the final connection made.

(c) Leak Detection System Testing Requirements. Functionality tests of leak detection systems shall be conducted in accordance with the manufacturer’s instructions and the following standards and procedures:

(1) Testing of probes. Except as provided in R2206-02(c)(2), leak detection probes shall be removed from their installed location, and manually tested by exposing such probes to *liquid motor fuel*. Probes capable of discriminating *liquid motor fuel* from water shall also be exposed to water. Leak detection probes which cannot be removed from their installed location may be tested by a method recommended by the manufacturer and acceptable to the *Department*.

(2) Testing of discharge line leak detectors. Discharge line leak detectors shall be tested by withdrawing *liquid motor fuel* from the impact valve port. *Liquid motor fuel* shall be withdrawn at a rate equal to the minimum rate that the line leak detector is required to activate.

(3) Dispensing of fuel for testing purposes. The *liquid motor fuel* to be used for testing purposes shall be dispensed from the *liquid motor fuel* storage system into a metal *safety can* of a capacity not exceeding 2½ gallons. Except as provided in R2206-02(c)(2), such *liquid motor fuel* shall be withdrawn through the storage system dispenser. *Liquid motor fuel* withdrawn from the storage system shall be returned to the storage system through the fill connection.

(4) Standard for successful test. A leak detection system test shall be deemed successful if:

(A) each tank-interstitial leak detection probe in the system, when exposed to *liquid motor fuel* and, if designed for such purpose, water, causes the activation of the audible and visible alarm.

(B) each pump sump leak detection probe in the system, when exposed to *liquid motor fuel* and, if designed for such purpose, water, causes:

(*1*) the activation of the audible and visible alarm, and

(*2*) the shutdown of the *liquid motor fuel* pump.

(C) each dispenser pan leak detection probe in the system, when exposed to *liquid motor fuel* and, if designed for such purpose, water, causes:

(*1*) the activation of the audible and visible alarm, and

(*2*) the shutdown of the affected dispenser or *liquid motor fuel* pump.

(D) each electronic line leak detector in the system, upon detection of *liquid motor fuel* leak, causes:

(*1*) the activation of the audible and visible alarm, and

(*2*) the shutdown of the *liquid motor fuel* pump or a significant restriction of *liquid motor fuel* flow.

(E) each mechanical line leak detector in the system, upon detection of a *liquid motor fuel* leak, causes the shutdown of the *liquid motor fuel* pump or the stopping of *liquid motor fuel* flow at any rate exceeding three (3) gallons per hour.

(5) Restoration of system. Upon successful completion of a leak detection system functionality test, *liquid motor fuel storage and dispensing system*, including the leak detection system, shall be returned to normal operation and checked to ensure that it is in good working order.

(d) Portable Fire Extinguisher Requirements. A portable fire extinguisher having at least a 40-B:C rating shall be readily available for use.

§ 2207 Reserved

§ 2208-01 Mobile Compressed Natural Gas Motor Fuel Systems

(a) Scope. This section sets forth requirements for the design, installation, operation and maintenance of *mobile CNG motor fuel systems* and *mobile CNG cascades*.

(b) Definitions. The following terms shall, for purposes of this section and as used elsewhere in the *rules*, have the meaning shown herein:

Mobile CNG motor fuel system. A *CNG motor fuel system* mounted on a vehicle chassis, intended to be driven to different sites for the purpose of dispensing *CNG* into portable *containers*, storage systems or *motor vehicle*-mounted *containers*.

Mobile CNG cascade. Multiple *CNG containers* connected together by rigid steel pipe or tubing, mounted on a trailer or *motor vehicle* chassis, and intended to be driven or towed to different sites for the purpose of dispensing *CNG* into portable or *motor vehicle*-mounted *containers*.

(c) Mobile CNG Motor Fuel-Dispensing Systems. *Mobile CNG motor fuel systems* shall comply with the following requirements:

(1) Design and installation requirements. The design and installation of mobile CNG motor fuel systems shall comply with the requirements of FC2208 and the following:

(A) *Natural gas* connections for the gas supply shall be designed and installed in compliance with the requirements of the *natural gas* utility and the *Fuel Gas Code*.

(B) Ventilation openings shall be *approved* by the *Department.*

(C) Labels reading “MANUAL CYLINDER SHUT OFF VALVE” in lettering a minimum of ½” high shall be placed on the appropriate access doors.

(2) Fire safety precautions. The following fire safety precautions shall be observed at all times during operation of mobile *CNG motor fuel systems*:

(A) *Mobile CNG motor fuel systems* may only be operated outdoors.

(B) The engine and ignition system of the *mobile CNG motor fuel system* and the *motor vehicle* into which CNG is being dispensed shall be off during dispensing operations.

(C) The wheels of such mobile systems shall be chocked during compressing and/or dispensing operations.

(D) *Motor vehicles* into which CNG is being dispensed shall be electrically grounded to the *mobile CNG motor fuel system*.

(E) A cellular telephone by which fires or other emergencies may be reported to the *Departmen*t shall be provided to the *certificate of fitness* holder responsible for the operation of the *mobile CNG motor system*.

(d) Mobile CNG Cascades. *Mobile CNG cascades* shall comply with the following requirements:

(1) Design and installation requirements. The design and installation of *mobile CNG cascades* shall comply with the requirements of FC2208 and the following:

(A) A manual shut-off valve shall be provided. Such valve shall be accessible and shall be installed in a protected location to minimize damage from vibration and unsecured objects. Labels with a minimum of ½" letters indicating the location of the manual shut-off valve shall be affixed to the *mobile CNG cascade* at the valve or other conspicuous location.

(B) *CNG containers* and shut-off valves shall be color-coded as follows, and the pressure of each bank clearly indicated on the unit:

(*1*) High pressure – black

(*2*) Medium pressure – green

(*3*) Low pressure – orange

(C) Labels reading "COMPRESSED NATURAL GAS" in red lettering a minimum of six (6) inches high shall be placed on each side and the rear of the *mobile CNG cascade*.

(2) Fire safety precautions. The following fire safety precautions shall be observed at all times during operation of *mobile CNG cascades*:

(A) *Mobile CNG cascades* may only be operated outdoors.

(B) The wheels of such mobile cascade shall be chocked during operation.

(C) If attached to a *motor vehicle*, the engine and ignition system of the *motor vehicle* and the *motor vehicle* into which *CNG* is being dispensed shall be off during dispensing operations.

(D) When the *mobile CNG cascade* is used as a replacement for a dispenser, the cascade shall be located in an *approved* dispensing area and the *Department* shall be notified of the use of the cascade as a replacement and its location.

(e) Portable Fire Extinguisher Requirements. Each *mobile CNG motor fuel system* and each *mobile CNG cascade* shall be provided with a portable fire extinguisher having at least a 20-B:C rating.

§ 2208-02 Self-Service Compressed Natural Gas Motor Fuel-Dispensing Facilities

(a) Scope. This section sets forth requirements for the operation and maintenance of *self-service CNG motor fuel-dispensing facilities*.

(b) General Provisions

(1) Facility operation and maintenance. All *self-service CNG motor fuel-dispensing facilities* shall be operated and maintained in accordance with FC Chapter 22 and this section.

(c) Operational and Maintenance Requirements

(1) Movement of motor vehicles. The *facility* shall be operated so that movement of *motor vehicles* is orderly and consistent with the safe operation of the *facility*.

(2) Repairs. *Motor vehicles* shall not be repaired in dispensing areas.

(3) Control booth requirements

(A) Housekeeping. The control booth shall be kept clean and orderly. The glass panels of the control booth shall be kept clean and unobstructed at all times. Access to the controls in the booth shall be kept unobstructed by equipment, merchandise or litter.

(B) Operating manual. An operating manual consisting of a copy of this section, emergency procedures, and *facility* operating procedures shall be maintained in the control booth.

(C) Portable fire extinguisher requirements. In addition to the portable fire extinguishers required by FC2208.7.4.2 to be provided in dispensing areas, two (2) portable fire extinguishers with at least a 40-B:C rating shall be provided within the control booth.

(4) Daily inspections. The *certified attendant* shall conduct an inspection of the *facility* on at least a daily basis, and document such inspection in the log book required by R2208-02(c)(5). The inspection shall verify that:

(A) The heat detectors are undamaged and unobstructed.

(B) Portable fire extinguishers have been serviced and have adequate pressure.

(C) The remote manual release (shutdown) is clear of obstructions.

(D) Audible and visible alarms are in good working order.

(E) Emergency procedures signage is posted, unobstructed and legible.

(F) Required lighting is in good working order.

(G) Any mirrors and/or *approved* closed-circuit television used to monitor dispensing operations are in good working order.

(H) The voice communications system is in good working order.

(5) Maintenance log book. A maintenance log shall be kept on the *premises* for inspection by any *Department* representative. Such log shall list all certified attendants and other persons on the *premises* who hold *certificates of fitness* with their numbers and expiration dates. Entries shall be made in such log book of the daily inspections required by this section, any maintenance or repair of any system, and any unusual occurrences.

(6) Fuel Dispensing. Persons dispensing *CNG* at a *self-service CNG motor fuel-dispensing facility* shall hold a valid driver's license or be at least 18 years of age. The *certified attendant* on other *facility* personnel may require any members of the public to produce evidence of same.

§ 2209-2210 Reserved

§ 2211-01 Repair Garages For Vehicles Fueled by Lighter-Than-Air Fuels

(a) Scope. This section sets forth standards, requirements and procedures for the issuance of *permits* to *repair garages* that repair and/or convert *CNG*, *LNG*, hydrogen and/or other vehicles fueled by lighter-than-air fuels.

(b) General Provisions. Pursuant to FC105.6, a permit must be obtained for the operation of any *repair garage*.

(c) Permit issuance. No original or renewal *permit* shall be issued to any *repair garage* that repairs and/or converts vehicles fueled by *CNG*, *LNG*, hydrogen or other lighter-than-air fuels, including facilities formerly permitted by the *Department* as a *motor vehicle* repair shop, unless such *repair garage* is in compliance with the requirements of FC2211.7, or documentation is submitted to the *Department* confirming that such *repair garage* was approved for the repair or conversion of such vehicles by the *Department of Buildings* pursuant to the 1968 Building Code.

CHAPTER 23
HIGH-PILED COMBUSTIBLE STORAGE

§2301-2310 Reserved

§ 2301-2310 Reserved

CHAPTER 24
TENTS AND OTHER MEMBRANE STRUCTURES

§2401-2404 Reserved

§ 2401-2404 Reserved

CHAPTER 25
TIRE REBUILDING AND TIRE STORAGE

§2501-2509 Reserved

§ 2501-2509 Reserved

CHAPTER 26
WELDING AND OTHER HOT WORK

§2601-2603 Reserved
§2604-01 Hot Work in Repair Garages
§2605-01 Use of Oxygen and a Flammable Gas in Citywide Hot Work Operations
§2606-2608 Reserved
§2609-01 Piped Natural Gas and Oxygen Consuming Devices and Installations

§ 2601-2603 Reserved

§ 2604-01 Hot Work in Repair Garages

(a) Scope. This section sets forth requirements for conducting *hot work* operations in *repair garages* with a capacity for more than one (1) *motor vehicle*, or in connection with such businesses.

(b) General Provisions

(1) Required hot work enclosure or partition. In *repair garages* with a capacity of more than one *motor vehicle*, *hot work* shall be performed in a fire-rated enclosure or behind a noncombustible partition satisfying the requirements of R2604-01(c).

(2) Outdoor hot work area. The *Department* may approve use of an outdoor area satisfying the requirements of R2604-01(d) in lieu of, or in addition to, compliance with the enclosure or partition requirements of R2604-01(c).

(c) Hot Work Design and Installation Requirements. In a *repair garage* with a capacity for more than one (1) *motor vehicle*, *hot work* shall be conducted in an area protected in one (1) of the following manners:

(1) Enclosure. *Hot work* may be conducted within a fire-rated enclosure, as set forth in FC2604.1.5.1.

(2) Partition. *Hot work* may be conducted behind a noncombustible screen that is positioned and of sufficient size to prevent the passage of sparks, slag and heat from the *hot work area*. Such protection may be provided by a noncombustible draw curtain affixed by rollers to an overhead monorail. Such curtain shall be in close contact with the floor at all points, and sufficiently long so as to completely enclose the *motor vehicle* being worked upon. The curtain shall form the third and fourth sides of the enclosure, with the exterior wall of the building forming the first and second sides.

(d) Outdoor Hot Work Areas. In lieu of, or in addition to, complying with the requirements of R2604-02(c), the *owner* of a *repair garage* may apply for *Department* approval of the use of an outdoor area for *hot work* operations. When such outdoor area is used in lieu of

satisfying the requirements of R2604-01(c), the *owner* shall submit an affidavit or other *approved* form or documentation attesting that all *hot work* operations will be conducted in a designated outdoor area on the *premises*, or, with the written permission of the property *owner*, on an adjoining or nearby *premises*. Such outdoor area shall not be a sidewalk, *public street* or *private road*, and shall be otherwise acceptable for such purposes pursuant to FC2601.3.

§2605-01 Use of Oxygen and a Flammable Gas in Citywide Hot Work Operations

(a) Scope. This section sets forth standards, requirements and procedures for the use of oxygen and a *flammable gas* in citywide *hot work* operations.

(b) Permits for Citywide Hot Work Operations

(1) Inspection of vehicles. Each vehicle used to transport torches and *containers* of oxygen and *flammable gas* for use in citywide *hot work* operations shall be inspected by a *Department* representative at the *Bureau of Fire Prevention*'s Hazardous Cargo Vehicle Inspection Facility prior to the issuance of a *permit* for citywide *hot work* operations.

(2) Permit limitation. Pursuant to FC105.1.2, a citywide *permit* authorizes hot work at any particular *construction site* for a maximum duration of thirty (30) days. A site-specific *permit* shall be obtained for any *construction site* at which *hot work* operations are conducted for more than 30 days.

(3) Reserve storage of oxygen and flammable gases. A citywide *permit* for *hot work* operations does not authorize reserve storage of oxygen or *flammable gas* at a work site. A separate *application* shall be made for a *permit* authorizing such reserve storage, as set forth in FC105.6.

(4) Availability of permit for inspection. A copy of the citywide *permit* shall be kept in each vehicle which transports oxygen and *flammable gas* for use during *hot work* operations. The *permit* shall be valid only for the specific *motor vehicle* identified on the *permit*. A copy of the citywide *permit* shall also be available at each job site location and made available for inspection by any *Department* representative.

(c) Transport Vehicle Requirements

(1) Securing of containers. *Containers* shall be safely secured with metal brackets or chains.

(2) Vehicle signage. To indicate that *flammable gas* is being transported, each transport vehicle shall be marked, on each side and the rear of the vehicle, with

durable signs complying with the requirements of United States DOTn regulations.

(3) Portable fire extinguisher requirements. A portable fire extinguisher with at least a 2-A:20-B:C rating shall be provided on the vehicle and kept readily accessible.

(d) Notification of Hot Work. The *owner* of the *premises* on which the *hot work* operations are to be conducted shall be notified in writing by the citywide *permit* holder at least forty-eight hours in advance of the intent to conduct *hot work* operations. Such notice shall additionally inform the *owner* of the *owner's* responsibility to designate a *responsible person* to ensure that the work is performed in accordance with the requirements of FC Chapter 26 and this section. The citywide *permit* holder is hereby deemed to be designated as the *responsible person* for *hot work* operations at *Group R-3 occupancies*, unless the *owner* affirmatively designates a *responsible person* other than the citywide *permit* holder by executing an affidavit or other document approved by the *Department*. The citywide *permit* holder shall provide to the *owner* a copy of the applicable provisions of FC Chapter 26 and this section with such notification.

§ 2606-2608 Reserved

§ 2609-01 Piped Natural Gas and Oxygen Consuming Devices and Installations

(a) Scope. This section sets forth standards, requirements and procedures for the design, installation, operation and maintenance of devices and installations utilizing *piped natural gas* and oxygen, including torches used in the manufacture of jewelry. This section shall apply to both new and existing devices and installations.

(b) Definition. The following term shall, for purposes of this section and used elsewhere in the *rules*, have the meanings shown herein:

Natural gas/oxygen consuming device. A device, equipment or system that utilizes *piped natural gas* and oxygen together for heating, melting or welding.

(c) Permits

(1) Required permits. The *owner* or operator of a *natural gas/oxygen consuming device* shall obtain required *permits* prior to storage, *handling* and use of *natural gas* or oxygen:

(A) for the use of such device, in accordance with FC105.6.

(B) for storage and *handling* of oxygen, if oxygen *containers* are stored, in accordance with FC105.6.

(C) To compress a gas, if *natural gas* or oxygen is compressed, in accordance with FC105.6.

(2) Permit applications. Original and renewal *permit applications* shall include *design and installation documents* of the *natural gas/oxygen consuming device* installation, including a schematic diagram of the *natural gas* piping demonstrating compliance with the requirements of FC2609.8 and this section, and such other information and documentation as the *Commissioner* may prescribe.

(d) Supervision. *Natural gas/oxygen consuming device* operations shall be supervised by a *certificate of fitness* holder, in accordance with FC2603.4.1.

(e) Design and Installation Requirements

(1) Piping. *Natural gas* and oxygen piping shall be designed and installed in accordance with the *Building Code* and the applicable provisions of NFPA 51.

(2) Hot work devices. Torches and tips for *natural gas/oxygen consuming devices* shall be suitable for the gases used, and shall be of a type acceptable to the *Commissioner*.

(3) Pressure booster. When the *natural gas* supply pressure is less than five (5) *psig*, a pressure booster shall be provided to increase the pressure to at least five (5) *psig*, but not more than 15 *psig*.

(4) Flashback arrester and check valve. A UL *listed* combination flashback arrestor and backflow check valve shall be installed:

(A) On the oxygen supply line, between the final oxygen supply pressure regulator and each fuel consuming device.

(B) On the *natural gas* supply line, between the final *natural gas* supply pressure regulator and the fuel consuming devices.

(f) Operational Requirements

(1) Natural gas supply pressure. *Natural gas* pressure supplied to a device shall not exceed 15 *psig*, and the oxygen supply pressure to a device shall not exceed the *natural gas* supply pressure.

CHAPTER 27
HAZARDOUS MATERIALS – GENERAL PROVISIONS

§2701-2705 Reserved
§2706-01 Non-Production Laboratories
§2707-01 Transportation of Explosives by Motor Vehicles
§2707-02 Transportation by Motor Vehicle of Hazardous Materials in Continuous Transit Through New York City or For Transshipment From New York City

§ 2701-2705 Reserved

§ 2706-01 Non-Production Laboratories

(a) Scope. This section sets forth the standards and requirements for the storage, *handling* and use of *hazardous materials* in *non-production laboratories*.

(b) General Provisions. *Non-production laboratories* shall be designed, installed, operated and maintained in compliance with the requirements of FC2706 and this section.

(c) Design and Installation Requirements

(1) Electrical requirements. Electrical devices, equipment and systems installed in storage rooms in *non-production laboratories* shall comply with the *Electrical Code* requirements for Class I, Group D, Division 2 locations.

(d) Operational Requirements

(1) Signage. The entrance to each *laboratory unit* door shall have a conspicuously posted sign, constructed of metal or other durable material, with RED letters on a white background which shall be located in the area of the mid-point of the height of the door. Such sign shall read as follows:

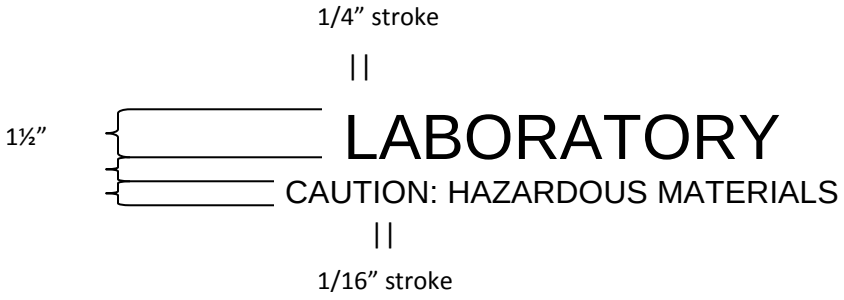

§ 2707-01 Transportation of Explosives by Motor Vehicles

(a) Scope. This section sets forth standards and requirements for the transportation, including delivery, by *motor vehicle*, of any blasting materials or *Division 1.1* or *1.5 explosives* for storage, *handling* or use in the city.

(b) General Provisions

(1) General. Except as otherwise provided in this section, the transportation of *explosives* by *motor vehicle* shall be conducted in compliance with the requirements in FC2707.

(2) Prohibitions

(A) It shall be unlawful to park or otherwise store *motor vehicles* containing *explosives* indoors, or on any other *premises*, except outdoors a *job site* at which approved *blasting operations* are being conducted.

(B) It shall be unlawful to transport or allow to be transported in a *motor vehicle* containing *explosives*, any matches, mechanical device or equipment capable of generating a spark or flame, or *hazardous material* other than *explosives* being transported.

(c) Vehicle Construction. Pursuant to FC2707.6.1, *motor vehicles* shall be designed and constructed in compliance with the following requirements and any *permit* conditions:

(1) The body shall be securely anchored to the chassis.

(2) The body shall be totally enclosed and separated from the driver's cab by a minimum distance of four (4) inches.

(3) The body shall be constructed of wood and the exterior completely wrapped with one-eighth inch (1/8”) noncombustible insulation covered by at least 22 gauge sheet metal. Adequate wrought steel straps may be used in the construction for strengthening purposes. No exposed metal of the sparking type shall be permitted in the interior of the body.

(A) The sides and ends shall be laminated construction having a total thickness of not less than two and one-quarter inches (2¼”). The outer panels shall be of three-eighths inch (3/8”) plywood glued and screwed to one and one-quarter inch (1¼”) posts. The void between the posts shall be filled with one and one-quarter inch (1¼”) hardwood placed vertically and securely fastened to the posts. The interior of the body shall be finished with five-eighths inch (5/8”) tongue and groove hardwood, placed horizontally and blind fastened.

(B) The floor shall consist of not less than five-eighths inch (5/8”) tongue and groove hardwood placed horizontally and blind fastened to a subfloor of

three-quarters inch (¾") hardwood boards laid at right angles to the finished floor, the subfloor shall be securely bolted to a one and three-eighths inch (1-3/8") hardwood sill bolted to a structural shape bolster or cross bar.

(C) The roof shall consist of not less than three-eighths inch (3/8") plywood glued and screwed to one and one-quarter inch (1¼") ribs.

(4) The only entrance into the body shall be through the rear doors. Entry shall be by double doors constructed in compliance with the specifications for the sides and ends of the body. The door opening shall be of such dimension that when the doors are in open position they shall not extend beyond the extreme width of the rear fenders. The doors shall be hung on continuous or piano hinges. An Eberhard No. 5628 three (3) point door lock with handle equipped for a padlock or its equivalent shall be used to secure the door in its closed position. Except when *explosives* are being loaded or unloaded into or from the body, the door shall be kept locked with a two (2) inch padlock having not less than a five-eighths inch (5/8") hardened shackle.

(5) If wheel pockets are used, they shall be formed by a three-quarter inch (¾") hardwood box over adequate hardwood framing.

(6) Bulletproofing protection shall be provided. Each *motor vehicle* shall be protected against shots fired from a high powered rifle by a minimum protection of one and one-half inch (1-½") 7039-T-63 aluminum thirty five-hundredths inch (35/100") ceramic armor with one-quarter inch (¼") *approved* fiberglass backing, eight (8) inches of sand or *approved* equivalent. Such protection may be provided by lining the entire cargo space with such materials, or by placing a cabinet constructed of such materials within the cargo space. If a cabinet is used, then the top of the cabinet shall be arranged as a blow-out panel, and all *explosives* carried shall be within the cabinet.

(d) Vehicle Capacity

(1) Quantity limits. The maximum quantity to be transported, delivered or carried in a *motor vehicle* at any one time shall not exceed 1,000 pounds of *explosives* or 5,000 electric fuses or blasting caps.

(e) Vehicle Markings

(1) The *motor vehicle* shall be provided with prominently displayed placards, in compliance with United States Department of Transportation regulations, identifying the type *explosives* being transported.

(2) The name of the *motor vehicle owner* and operator shall be marked on the *motor vehicle* in accordance with United States Department of Transportation regulations.

(3) The *Department* sticker identifying the *motor vehicle* as having been issued a *permit* shall be affixed inside the front windshield of the *motor vehicle*.

(4) A sign in English shall be painted above the loading on the front partition inside the *explosives* compartment reading, "Unlawful to transport more than 1,000 pounds of explosives."

(f) Portable Fire Extinguisher Requirements. *Motor vehicles* transporting *explosives* having a gross vehicle weight of less than 14,000 pounds shall be provided with at least two (2) portable fire extinguishers having a minimum combined rating of 4-A:20-B:C. *Motor vehicles* transporting *explosives* having a gross vehicle weight of 14,000 pounds or greater shall be provided with at least two (2) portable fire extinguishers with a minimum combined rating of 4-A:70-B:C.

§ 2707-02 Transportation by Motor Vehicle of Hazardous Material in Continuous Transit Through New York City or For Transhipment From New York City

(a) Scope. This section sets forth requirements for the transportation of *flammable liquids*, *combustible liquids*, *compressed gases*, and *explosives*, including *fireworks* in interstate and intrastate commerce, through the city without pickup or delivery, and with respect to deliveries of such materials to wharfs or piers, airports and shipping terminals for transshipment out of the city, except the following types of *hazardous materials*, which are not subject to this section:

(1) Paints, varnishes, lacquers, enamel, shellac, stains, dryer, paint thinners and solvents, lacquer thinners and solvents, varnish thinners and solvents, enamel thinners and solvents, shellac thinners and solvents, stain thinners and solvents; lacquers, varnish, enamel, shellac, stains, dryers, printing inks and printing ink solvents, screening printing inks and screening printing ink solvents, lithographic inks and lithographic ink solvents or other finished products not labeled as in the foregoing, but prominently labeled, "A Paint Product."

(2) Small arms ammunition.

(b) General Provisions

(1) Transportation of prohibited hazardous materials. *Hazardous material* prohibited by federal, state or city law, rule or regulation shall not be permitted to enter or pass through New York City, except for the individual shipments specifically authorized by the governmental agencies and authorities having jurisdiction and

upon a determination by such agencies that there is no practical alternative route to passage through the city for transshipment. Any shipments so authorized, shall conform to routes, times, and safety conditions specified by the *Department*.

(2) Transportation by approved motor vehicles. *Motor vehicles* for which a *permit* has been issued may be used to transport allowable *hazardous materials* in accordance with the Fire Code and the *rules* without conforming to the routing, time, escort and other requirements of this section.

(3) Fueling of motor vehicles prohibited. *Motor vehicles* transporting *hazardous materials* through the city shall not be fueled in the city, nor shall any stop be made within the city, except as required by traffic.

(4) Parking and standby prohibited. No *motor vehicle* transporting *hazardous materials* through the city (including "empty" vehicles not purged of ignitable vapors) shall stand or park in the city, even though attended, on any public highway, street or road or private property, except that empty vehicles, properly placarded in accordance with the regulations of the United States Department of Transportation, may enter the city for servicing and maintenance. In cases of *motor vehicle* emergency, every effort shall be made not to stand or park adjacent to or in proximity to any bridge, tunnel, dwelling, building, or place where persons work, congregate or assemble.

(5) Avoidance of congested areas and streets. *Motor vehicles* transporting *hazardous materials* shall avoid congested areas so far as is practicable and use highway exits as close as possible to final destination.

(6) Transfer of hazardous materials. *Hazardous materials* shall not be transferred from one (1) container or *motor vehicle* to another on any public highway, street or road except in a case of emergency.

(7) Notification of breakdown or collision. In the event of a breakdown or collision, the *Department* and Police Department shall be promptly notified.

(8) Routes and times, authorization when needed, special conditions and information for the transportation of *hazardous materials* through the City of New York by *motor vehicle*, may be obtained by writing to the Hazardous Cargo Vehicle Inspection Unit, *Bureau of Fire Prevention*, New York City Fire Department, 245 Meserole Avenue, Brooklyn, NY 11222, or by calling the *Department's* Hazardous Cargo Vehicle Inspection Unit at (718) 752-0296 or 0341 during regular business hours. Such information may be obtained on weekends and holidays, or in an emergency, by calling the Operations Center at (718) 999-7900.

(c) Time of transit. *Hazardous material* shipments shall transit the city only during non-rush hours as follows:

(1) Monday through Friday:

(A) Prohibited materials for which specific permission has been given by the *Department*:

10:00 am. to 3:00 pm.
7:00 pm. to 6:00 am.

(B) For explosives, 10:00 am. to 3:00 pm.

(C) All other *hazardous materials*:

9:00 am. to 4:00 pm.
6:00 pm. to 7:00 am.

(2) Saturday, Sunday and Holidays: As traffic conditions permit, consistent with the laws, rules and regulations of the governmental agencies and/or authorities having jurisdiction.

(d) Routing. All *motor vehicles* subject to the routing requirements of this section shall comply with the following routes:

(1) From New Jersey to Western Westchester County and Upstate New York: George Washington Bridge (upper level) to Washington Expressway (without detour on city streets) via the Alexander Hamilton Bridge to the Major Deegan Expressway to New York Thruway (I-87).

(2) From Western Westchester County and Upstate New York to New Jersey: Reverse of route set forth in R2707-02(d)(1).

(3) From New Jersey to Eastern Westchester County, Upstate New York and New England: George Washington Bridge (upper level) to Washington Expressway (without detour onto City streets) via the Alexander Hamilton Bridge, directly to Cross Bronx Expressway (I-95) to Bruckner Expressway, continue on Bruckner Expressway to New England Thruway (I-95).

(4) From Eastern Westchester County, Upstate New York and New England to New Jersey: Reverse of route set forth in R2707-02(d)(3).

(5) From New Jersey to Long Island:

(A) From George Washington Bridge: George Washington Bridge (upper level) via Washington Expressway (without detour onto City streets), via the Alexander Hamilton Bridge directly to Cross Bronx Expressway (I-95), east on Cross Bronx Expressway (I-95) to Throgs Neck Bridge, south across Throgs Neck Bridge to Clearview Expressway (I-295) to

Long Island Expressway, east on Long Island Expressway (I-495) to Long Island.

(B) From Outerbridge Crossing: Outerbridge Crossing to West Shore Expressway, North on West Shore Expressway (State 440) to Staten Island Expressway (I-278). Then, East on Staten Island Expressway (I-278) to Verrazano Bridge, cross upper level of Verrazano Bridge to Brooklyn Queens Expressway (I-278), then east on Brooklyn Queens Expressway (I-278) to Long Island Expressway (I-495), then east on Long Island Expressway (I-495) to Long Island.

(C) From Bayonne Bridge: Bayonne Bridge to Willowbrook Expressway (State 440), then south on Willowbrook Expressway (State 440) to Staten Island Expressway (I-278). Then, East on Staten Island Expressway (I-278) to Verrazano Bridge, cross upper level of Verrazano Bridge to Brooklyn Queens Expressway (I-278), then east on Brooklyn Queens Expressway (I-278) to Long Island Expressway (I-495), then east on Long Island Expressway (I-495) to Long Island.

(D) From Goethals Bridge: Goethals Bridge to Staten Island Expressway (I-278). Then, East on Staten Island Expressway (I-278) to Verrazano Bridge, cross upper level of Verrazano Bridge to Brooklyn Queens Expressway (I-278), then east on Brooklyn Queens Expressway (I-278) to Long Island Expressway (I-495), then east on Long Island Expressway (I-495) to Long Island.

(6) From Long Island to New Jersey:

(A) Reverse of route set forth in R2707-02(d)(5)(A), (B), (C) or (D).

(B) Hazardous material shipment requiring escort (including *explosives* and *fireworks)* shall use route via George Washington Bridge only to minimize travel time within City.

(7) From New England or Upstate New York, to Long Island (see alternative routes set forth in R2707-02(d)(47)):

(A) New England Thruway (I-95) to Connors Street exit, to Bruckner Expressway (I-95) to Throgs Neck Expressway (I-295), to Throgs Neck Bridge, to Clearview Expressway (I-295), to Long Island Expressway (I-495), east on Long Island Expressway to City Line.

(B) New York State Thruway (I-87) south to Major Deegan Expressway (I-87), to Cross Bronx Expressway (I-95), East to Bruckner Expressway, (I-278) to Throgs Neck Bridge, to Clearview Expressway (I-295), to Long Island Expressway, (I-495) east on Long Island Expressway to City Line.

(8) From Long Island to Upstate New York, New England and Westchester County: Reverse of routes set forth in R2707-02(d)(7)(A) and (B).

(9) From New Jersey to LaGuardia Airport via Goethals Bridge. Goethals Bridge to Staten Island Expressway (I-278) to Verrazano Narrows Bridge (upper level) to Brooklyn Queens Expressway (I-278) to Astoria Blvd. (exit 39), east to 82nd Street then north on 82nd Street to LaGuardia Airport.

(10) From LaGuardia Airport to New Jersey via Goethals Bridge: Reverse of route set forth in R2707-02(d)(9).

(11) From New Jersey to LaGuardia Airport via Outerbridge Crossing: Outerbridge Crossing to West Shore Expressway (State 440), to Staten Island Expressway (I-278) east to the Verrazano Narrows Bridge (upper level), to Brooklyn Queens Expressway (I-278), to Astoria Blvd. (exit 39), east to 82nd Street, north on 82nd Street to LaGuardia Airport.

(12) From LaGuardia Airport to New Jersey via Outerbridge Crossing: Reverse of route set forth in R2707-02(d)(11).

(13) From New Jersey to LaGuardia Airport via George Washington Bridge (see alternative routes set forth in R2707-02(d)(47)): George Washington Bridge (upper level) via Washington Expressway (without detouring onto City streets), via Alexander Hamilton Bridge, directly to Cross Bronx Expressway (I-95), east on Cross Bronx Expressway (I-95), to Throgs Neck Bridge, south across Throgs Neck Bridge to Clearview Expressway (I-295) to Long Island Expressway (I-495), west on Long Island Expressway (I-495) to Van Wyck Expressway (I-678), north on Van Wyck Expressway (I-678) to Northern Blvd. (25A), west on Northern Blvd. to Astoria Blvd, west on Astoria Blvd. to 82nd Street, north on 82nd Street to LaGuardia Airport.

(14) From LaGuardia Airport to New Jersey via George Washington Bridge (see alternative routes set forth in R2707-02(d)(47)): Reverse of route set forth in R2707-02(d)(13).

(15) From Long Island to LaGuardia Airport:

(A) Long Island Expressway (I-495) West to Van Wyck Expressway (I-678), North to Northern Blvd. (25-A), West to Astoria Blvd. to 82nd Street, North on 82nd Street to LaGuardia Airport; or

(B) Long Island Expressway (I-495) West to Brooklyn Queens Expressway (I-278) East to Astoria Blvd. (Exit 39) East to 82nd Street, North on 82nd to LaGuardia Airport; or

(C) West on Sunrise Highway (State 27) to North Conduit Blvd. to Van Wyck Expressway (I-678), north on Van Wyck Expressway (I-678) to Northern Blvd. (25-A), west on Northern Blvd to Astoria Blvd., Astoria Blvd. to 82nd Street, north on 82nd Street to LaGuardia Airport; or

(D) West on Sunrise Highway (State 27) to North Conduit Blvd. to Van Wyck Expressway (I-678), north on Van Wyck Expressway (I-678) to Long Island Expressway (I-495), west on Long Island Expressway to Brooklyn Queens Expressway (I-278), east on Brooklyn Queens Expressway to Astoria Blvd. (Exit 39), east on Astoria Blvd. to 82nd Street, north on 82nd Street to LaGuardia Airport.

(16) From LaGuardia Airport to Long Island: Reverse of route set forth in R2707-02(d)(15)(A), (B), (C) or (D).

(17) From New England and Upstate New York to LaGuardia Airport (see alternative routes set forth in R2707-02(d)(47)):

(A) New England Thruway (I-95) south to Bruckner Expressway (I-95) to Throgs Neck Expressway (I-295), via Throgs Neck Bridge to Clearview Expressway (I-295) to Long Island Expressway (I-495), west to Brooklyn Queens Expressway (I-278) east, to Astoria Blvd. (exit 39), east to 82nd Street, then north on 82nd Street to LaGuardia Airport.

(B) New York State Thruway (I-87) south to Major Deegan Expressway (I-87) to Cross Bronx Expressway (I-95) east to Bruckner Expressway (I-278) to Throgs Neck Bridge, to Clearview Expressway (I-295), to Long Island Expressway (I-495) west, to Brooklyn Queens Expressway (I-278) east, to Astoria Blvd. (Exit 39), east to 82nd Street, then north on 82nd Street to LaGuardia Airport.

(18) From LaGuardia Airport to New England and Upstate New York: Reverse of routes set forth in R2707-02(d)(17)(A) and (B).

(19) From New Jersey to JFK International Airport via Goethals Bridge. Goethals Bridge to Staten Island Expressway (I-278) to Verrazano-Narrows Bridge (upper level), Brooklyn Queens Expressway (I-278) east to Long Island Expressway (I-495), east to Van Wyck Expressway (I-678), south on Van Wyck Expressway (I-678) to JFK International Airport.

(20) From JFK International Airport to New Jersey via Goethals Bridge: Reverse of route set forth in R2707-02(d)(19).

(21) From New Jersey to JFK International Airport via Outerbridge Crossing: Outerbridge Crossing to West Shore Expressway (State 440) to Staten Island Expressway (I-278) to Verrazano-Narrows Bridge (upper level), to Brooklyn

Queens Expressway east (I-278) to Long Island Expressway (I-495), east on Long Island Expressway (I-495) to Van Wyck Expressway (I-678), south on Van Wyck Expressway (I-678) to JFK International Airport.

(22) From J.F.K International Airport to New Jersey via Outerbridge Crossing: Reverse of route set forth in R2707-02(d)(21).

(23) From New Jersey to JFK. International Airport via George Washington Bridge (upper level) (see alternative routes set forth in R2707-02(d)(47)): George Washington Bridge (upper level), via Washington Expressway (without detouring onto City streets) via the Alexander Hamilton Bridge directly to Cross Bronx Expressway (I-95), east on Cross Bronx Expressway (I-95), to Throgs Neck Bridge, south across Throgs Neck Bridge to Clearview Expressway (I-295) to Long Island Expressway (I-495), west to Van Wyck Expressway (I-678), south on Van Wyck Expressway (I-678) to JFK International Airport.

(24) From JFK International Airport to New Jersey via George Washington Bridge (see alternative routes set forth in R2707-02(d)(47)): Reverse of route set forth in R2707-02(d)(23).

(25) From New England and Upstate New York to JFK International Airport (see alternative routes set forth in R2707-02(d)(47)):

(A) New England Thruway (I-95), south to Bruckner Expressway (I-95), to Throgs Neck Expressway (I-295), via Throgs Neck Bridge to Clearview Expressway (I-295), to Long Island Expressway (I-495) west on Long Island Expressway (I-495) to Van Wyck Expressway (I-678), south on Van Wyck Expressway (I-678), to JFK International Airport.

(B) New York State Thruway (I-87) south to Major Deegan Expressway (I-87) to Cross Bronx Expressway (I-95), east to Bruckner Expressway (I-278) to Throgs Neck Bridge, to Clearview Expressway (I-295) to L.I. Expressway (I495) west to Van Wyck Expressway (I-678), south on Van Wyck Expressway (I-678) to JFK Airport.

(26) From JFK International Airport to New England and Upstate New York (see alternative routes set forth in R2707-02(d)(47)): Reverse of routes set forth in R2707-02(d)(25)(A) and (B).

(27) From Long Island to JFK International Airport:

(A) West on Long Island Expressway (I-495) to Van Wyck Expressway (I-678), south on Van Wyck Expressway (I-678) to JFK International Airport.

(B) West on Sunrise Highway (State 27) to North Conduit Blvd. to Van Wyck Expressway (I-678), south on Van Wyck Expressway (I-678) to JFK International Airport.

(C) West on Sunrise Highway (State 27) to North Conduit Blvd. to Rockaway Blvd., or 150th Street, to JFK International Airport.

(28) From JFK International Airport to Long Island: Reverse of routes set forth in R2707-02(d)(27)(A), (B) and (C).

(29) From New Jersey to Staten Island wharfs and piers:

(A) Bayonne Bridge Plaza via Willowbrook Expressway (State 440) to Staten Island Expressway (I-278), west on Staten Island Expressway to Western Avenue, north on Western Avenue to Richmond Terrace, east on Richmond Terrace to Northside wharfs or piers, or Staten Island Expressway, east to Bay Street Exit, then local streets to East Side wharfs or piers.

(B) Goethals Bridge Plaza via Staten Island Expressway (I-278) to Forest Avenue, north on Forest Avenue to Goethals Road North, west on Goethals Road North to Western Avenue, north on Western Avenue to Richmond Terrace, then local streets for Northside wharfs or piers, or Staten Island Expressway east to Bay Street exit, then local streets to East Side wharfs or piers.

(C) Outerbridge Crossing via West Shore Expressway (State 440) and Staten Island Expressway (I-278), west on Staten Island Expressway to Western Avenue, north on Western Avenue to Richmond Terrace, then local streets for Northside wharfs or piers, or Staten Island Expressway east to Bay Street, then local streets to East Side wharfs or piers.

(30) From Staten Island wharfs or piers to New Jersey: Reverse of routes set forth in R2707-02(d)(29)(A), (B) and (C).

(31) From New Jersey to Brooklyn wharfs or piers:

(A) Bayonne Bridge, south via Willowbrook Expressway (State 440) to Staten Island Expressway (I-278), east to Verrazano-Narrows Bridge (upper level) to Brooklyn Queens Expressway (I-278), east on Brooklyn Queens Expressway (I-278), east on Brooklyn Queens Expressway (I-278) to nearest exit to location of wharf or pier then local streets to wharf or pier.

(B) Goethals Bridge to Staten Island Expressway (I-278) to Verrazano-Narrows Bridge (upper level), to Brooklyn Queens Expressway (I-278),

east on Brooklyn Queens Expressway (I-278) to nearest exit to location of wharf or pier then local streets to wharf or pier.

(C) Outerbridge Crossing to West Shore Expressway (State 440) to Staten Island Expressway (I-278) to Verrazano-Narrows Bridge (upper level), to Brooklyn Queens Expressway (I-278), east on Brooklyn Queens Expressway (I-278) to nearest exit to location of wharf or pier, local streets to wharf or pier.

(32) From Brooklyn wharfs and piers to New Jersey: Reverse of routes set forth in R2707-02(d)(31)(A), (B) and (C).

(33) From New Jersey to Manhattan wharfs and piers:

(A) George Washington Bridge (upper level), exit at 178th Street and Fort Washington Avenue, east on 178th Street to Amsterdam Avenue, south on Amsterdam Avenue to Cathedral Parkway (110th Street), east on 110th Street to Columbus Avenue, south on Columbus Avenue to west 57th Street, west on 57th Street to 11th Avenue, south on 11th Avenue to 55th Street, west on 55th Street to 12th Avenue, 12th Avenue north or south to wharf or pier location, or

(B) Lincoln or Holland Tunnel (for hazardous materials permitted by Port Authority of New York and New Jersey and Fire Department rules only) to 12th Avenue or West Street, then north or south to wharf or pier location, utilizing the following routes:

(C) Lincoln Tunnel to West Side wharfs and piers North of Lincoln Tunnel: From Lincoln Tunnel, exit at Dyer Avenue (40th Street) north on Dyer Avenue to 41st Street, west (left) on 41st Street, to 12th Avenue (right turn at 12th Avenue adjacent to elevated structure of West Side Highway, continue north on 12th Avenue to wharfs or piers.

(D) Lincoln Tunnel to West Side wharfs and piers South of Lincoln Tunnel: From Lincoln Tunnel exit at Dyer Avenue (40th Street) north on Dyer Avenue to 41st Street, west (left) on 41st Street to 12th Avenue, south (left) on 12th Avenue (under elevated structure of West Side Highway to southbound traffic lane of 12th Avenue) continue south on 12th Avenue and/or West Street to wharfs or piers.

(E) Holland Tunnel to West Side wharfs and piers North of Holland Tunnel: Exit from Holland Tunnel at Hudson Street, north (right turn) on Hudson Street to Canal Street, west (left turn) on Canal Street to West Street, north (right turn) on West Street, continue north on West Street and/or 12th Avenue, to wharfs or piers.

Note: West Street becomes 12th Avenue at about 12th Street.

(F) Holland Tunnel to West Side wharfs and piers South of Holland Tunnel: Exit from Holland Tunnel at Hudson Street, north (right turn) on Hudson Street to Canal Street, west (left turn) on Canal Street to West Street, north (right turn) on West Street to west Houston Street, make "U" turn from north bound traffic lane under elevated West Side Highway to south bound traffic lane of West Street, continue south on West Street to wharfs or piers.

(G) New Jersey, via George Washington Bridge, Lincoln or Holland Tunnels to Lower East Side (East River) wharfs or piers: Continue route set forth in R2707-02(d)(33)(A), (d)(33)(C) or (d)(34)(A), (d)(33)(D) or (d)(34)(B), (d)(33)(E) or (d)(34)(C), or (d)(33)(F) or (d)(34)(D) south on 12th Avenue or West Street, south on West Street to Battery Park Underpass (clearance 12' 11"), enter Battery Park Underpass and exit on South Street, continue north on South Street and/or marginal street under elevated F.D.R. Drive to location of wharf or pier.

(34) From Manhattan wharfs and piers to New Jersey:

(A) West Side wharfs and piers North of Lincoln Tunnel to Lincoln Tunnel: South on 12th Avenue (at 43rd Street, move to left traffic lane to exit at 42nd Street), east (left turn) at 42nd Street on block to 11th Avenue, turn south (right) at 11th Avenue, continue south on 11th Avenue for two blocks (follow signs to Lincoln Tunnel), east (left) on 40th Street to Lincoln Tunnel entrance at Galvin Avenue.

Note: In area of 12th Street, 12th Avenue becomes West Street.

(B) West Side wharfs and piers South of Lincoln Tunnel to Lincoln Tunnel: North on West Street to 12th Avenue, north on 12th Avenue to 40th Street, east on 40th Street across 11th Avenue to Galvin Avenue entrance to Lincoln Tunnel.

(C) West Side wharfs and piers North of Holland Tunnel to Holland Tunnel: South on 12th Avenue and continue south on West Street to Canal Street, east (left turn) on Canal Street to Hudson Street, then north (left turn) at Hudson Street to Holland Tunnel entrance.

(D) West Side wharfs and piers South of Holland Tunnel to Holland Tunnel: North on West Street to Canal Street, east (right turn) on Canal Street to Hudson Street, then north (left turn) on Hudson Street to Holland Tunnel entrance.

(E) Lower East Side (East River) wharfs or piers to New Jersey, via George Washington Bridge, Lincoln or Holland Tunnels: Proceed south on marginal street under elevated F.D.R. Drive and/or South Street to Battery Park Underpass, enter Battery Park Underpass and exit on West Street, proceed north on West Street and/or 12th Avenue, continue as per route set forth in R2707-02(d)(33)(C) or (d)(34)(A), (d)(33)(D) or (d)(34)(B), (d)(33)(E) or (d)(34)(C), or (d)(33)(F) or (d)(34)(D) to Lincoln and Holland Tunnels respectively, and, for George Washington Bridge, proceed north on 12th Avenue to 57th Street, east on 57th Street to Amsterdam Avenue, north on Amsterdam Avenue to 179th Street, west on 179th Street to George Washington Bridge.

(35) From New England, Westchester County and Upstate New York to Manhattan wharfs and piers:

(A) New England Thruway (I-95), south on New England Thruway (I-95), to Bruckner Expressway (I-278), to Willis Avenue and Third Avenue exit on 135th Street, west on 135th Street Third Avenue, south on Third Avenue across 3rd Avenue Bridge to 129th Street, east on 129th Street to Second Avenue, south on Second Avenue to East 125th Street, or

(B) New York Thruway (I-87), south to Major Deegan Expressway (I-87), Major Deegan Expressway (I-87) south to 138th Street exit, service road to Third Avenue, south on 3rd Avenue, across 3rd Avenue Bridge to east 129th Street, east on 129th Street to Second Avenue, south on Second Avenue to east 125th Street.

(C) Then, west on 125th Street to Amsterdam Avenue, south on Amsterdam Avenue to Cathedral Parkway (110th Street) east on 110th Street to Columbus Avenue, south on Columbus Avenue to west 57th Street, west on 57th Street to 11th Avenue, south on 11th Avenue to west 55th Street, west on west 55th Street to 12th Avenue north or south to wharf or pier location. For Lower East River wharfs and piers, continue south on 12th Avenue to West Street, south on West Street around Battery Park (do not use Battery Under-Pass) to South Street, north on marginal streets under the elevated F.D.R. Drive to location of wharf or pier.

(36) From Manhattan wharfs and piers to Upstate New York, Westchester County and New England:

(A) Reverse of route set forth in R2707-02(d)(35)(C) to 12th Avenue, north to West 57th Street, then east on West 57th Street to Amsterdam Avenue, north on Amsterdam Avenue to 125th Street, east to 1st Avenue, north on 1st Avenue to Willis Avenue Bridge, across Willis Avenue Bridge to Bruckner Blvd., Bruckner Blvd. to 138th Street entrance to Bruckner Expressway (I-278), east and north on Bruckner Expressway (I-278) to

New England Thruway (I-95), then New England Thruway (I-95) north to City line, or

(B) Reverse of route set forth in R2707-02(d)(35)(C) 12th Avenue, north to West 57th Street, then east on west 57th Street to Amsterdam Avenue, north on Amsterdam Avenue to 125th Street, east on 125th Street to 1st Avenue, north on 1st Avenue to Willis Avenue Bridge, across Willis Avenue Bridge, Willis Avenue to Major Deegan Expressway (I-87), Major Deegan Expressway north to New York Thruway (I-87), then north to City line.

(37) From New England, Upstate New York and Westchester County to Staten Island wharfs and piers:

(A) New England Thruway (I-95). South on New England Thruway (I-95) to Bruckner Expressway (I-95) to Throgs Neck Expressway (I-295) via Throgs Neck Bridge to Clearview Expressway (I-295) to Long Island Expressway (I-495), west on Long Island Expressway (I-495) to Brooklyn Queens Expressway (I-278), west to Verrazano-Narrows Bridge (upper level) to Staten Island Expressway (I-278) to Bay Street exit for Eastside wharfs or piers, or west to Western Avenue, north to Richmond Terrace, then local streets to Northside wharfs or piers.

(B) New York State Thruway (I-87) south to Major Deegan Expressway (I-87) to Cross Bronx Expressway (I-95), east on Cross Bronx Expressway (I-95) to Throgs Neck Bridge, to Clearview Expressway (I-295) to Long Island Expressway (I-495), west to Brooklyn Queens Expressway (I-278), west to Verrazano-Narrows Bridge (upper level), to Staten Island Expressway (I-278), exit at Bay Street for eastside wharfs or piers, or continue on Staten Island Expressway (I-278) to Western Avenue, north on western Avenue to Richmond Terrace, then local streets to Northside wharfs or piers.

(38) Staten Island wharfs or piers to New England, Upstate New York and Westchester County: Reverse of routes set forth in R2707-02(d)(37)(A) and (B).

(39) From New England, Westchester County and Upstate New York to Brooklyn wharfs or piers

(A) New England Thruway (I-95). South on New England Thruway (I-95) to Bruckner Expressway (I-95) to Throgs Neck Expressway (I-295) via Throgs Neck Bridge to Clearview Expressway (I-295), to Long Island Expressway (I-495), west on Long Island Expressway (I-495) to Brooklyn Queens Expressway (I-278) west on Brooklyn Queens Expressway (I-278) to nearest exit to wharf or pier location. Route from nearest expressway exit to wharf or pier via local streets.

(B) New York State Thruway (I-87) south to Major Deegan Expressway (I-87) to Cross Bronx Expressway (I-95), east on Cross Bronx Expressway (I-95) to Throgs Neck Bridge, south to Clearview Expressway (I-295), to Long Island Expressway, west on Long Island Expressway (I-495) to Brooklyn Queens Expressway, west on Brooklyn Queens Expressway (I-278) to nearest exit to wharf or pier location, then via local streets to wharf or pier.

(40) Brooklyn wharf or pier to New England, Westchester County and Upstate New York: Reverse of routes set forth in R2707-02(d)(39)(A) and (B).

(41) From Long Island to Brooklyn and Staten Island wharfs and piers:

(A) Long Island Expressway (I-495) west to Brooklyn Queens Expressway (I-278), then west on Brooklyn Queens Expressway (I-278), then continue:

(*1*) To nearest exit for Brooklyn wharfs or piers location.

(*2*) West on Brooklyn Queens Expressway (I-278) to Verrazano Bridge (upper level), cross bridge to Staten Island Expressway (I-278), exit at Bay Street for Staten Island Eastside wharfs or piers (utilizing local streets), or continue west on Staten Island Expressway (I-278) to Western Avenue, north on Western Avenue to Richmond Terrace, then local streets for Northside Staten Island wharfs or piers.

(42) Brooklyn or Staten Island wharfs and piers to Long Island: Reverse of routes set forth in R2707-02(d)(41)(A)(*1*) and (*2*).

(43) From Long Island to Manhattan wharfs and piers:

(A) West on Long Island Expressway (I-495) to Clearview Expressway (I-295), north on Clearview Expressway (I-295) across Throgs Neck Bridge to Bruckner Expressway (I-278), west on Bruckner Expressway (I-278) continuing as per routes set forth in R2707-02(d)(35)(A) and (C) to Manhattan wharfs or piers.

(B) From Manhattan wharfs and piers to Long Island: Use route set forth in R2707-02(d)(36)(A) to Bruckner Expressway (I-278), east on Bruckner Expressway (I-278) to Throgs Neck Expressway (I-295) south on Throgs Neck Expressway (I-295), over Throgs Neck Bridge, south on Clearview Expressway (I-295) to Long Island Expressway (I-495), then east on Long Island Expressway (I-495) to Long Island.

(44) Routes to Howland Hook Truck Terminal, Staten Island:

(A) From New Jersey:

(*1*) Bayonne Bridge Plaza via Willowbrook Expressway (State 440) south to Staten Island Expressway (I-278), north on Western Avenue, east to Howland Hook Terminal.

(*2*) Outerbridge Crossing, north on West Shore Expressway (State 440) to Staten Island Expressway (I-278), west on Staten Island Expressway (I-278) to Western Avenue, north on Western Avenue, east to Howland Hook Terminal.

(*3*) Goethals Bridge to Staten Island Expressway (I-278) to Forest Avenue, north on Forest Avenue to Goethals Road North, west on Goethals Road North to Western Avenue, north on Western Avenue, then east to Howland Hook Terminal.

(B) From New England, Upstate New York and Westchester County: Use routes set forth in R2707-02(d)(37)(A) and (B), except that entrance to Howland Hook Terminal is east from Western Avenue.

(C) From Long Island: West on Long Island Expressway (I-495) to Brooklyn Queens Expressway (I-278), then west on Brooklyn Queens Expressway (I-278) to Verrazano Bridge, cross upper level of Verrazano Bridge, then west on Staten Island Expressway (I-278) to Western Avenue, north on Western Avenue, then east to Howland Hook Terminal.

(D) From J.F. Kennedy Airport: North on Van Wyck Expressway (I-678) to Long Island Expressway (I-495), then west on Long Island Expressway continuing as per route set forth in R2707-02(d)(44)(C).

(E) From LaGuardia Airport: South on 82nd Street to Astoria Blvd., west on Astoria Boulevard to Brooklyn Queens Expressway (I-278), then west on Brooklyn Queens Expressway (I-278), continuing as per route set forth in R2707-02(d)(44)(C).

(45) Routes From Howland Hook Terminal:

(A) To New Jersey: Reverse of route set forth in R2707-02(d)(44)(A).

(B) To New England, Upstate New York and Westchester County: Reverse of route set forth in R2707-02(d)(44)(B).

(C) To Long Island: Reverse of route set forth in R2707-02(d)(44)(C).

(D) To J.F. Kennedy Airport: Reverse of route set forth in R2707-02(d)(44)(D).

(E) To LaGuardia Airport: Reverse of route set forth in R2707-02(d)(44)(E).

(46) Truck and Railroad Terminal in Bushwick Area, Brooklyn, and Maspeth Area, Queens. Utilize routes set forth in R2707-02(d)(5) from New Jersey, in R2707-02(d)(7) from upstate New York, New England and Westchester County, C-3 Island Expressway (I-495), then Long Island Expressway (I-495) to Grand Avenue exit (westbound) or Maurice Ave. exit (eastbound), then to Grand Avenue (and Grand Street), east or west as required. Reverse routes for return trips.

(47) Alternate routes. For vehicles not carrying explosives, alternate routes utilizing the Whitestone Bridge or the Robert F. Kennedy Bridge may be used in lieu of the Throgs Neck Bridge specified in R2707-02(d)(7)(B), (d)(8), (d)(13), (d)(14), (d)(17)(B), (d)(18), (d)(23), (d)(24), (d)(25)(B), (d)(26), (d)(37)(B), (d)(38), (d)(39)(B) and (d)(40), as follows:

(A) Cross Bronx Expressway (I-95) to Hutchinson River Parkway, south on Hutchinson River Parkway over Whitestone Bridge, and continue south on Whitestone Expressway (I-678).

(*1*) to Astoria Blvd., west on Astoria Blvd. to 82nd Street, north on 82nd Street to LaGuardia Airport.

(*2*) to Van Wyck Expressway (I-678), south on Van Wyck Expressway (I-678) to J.F. Kennedy Airport.

(*3*) to Van Wyck Expressway (I-678), south to Long Island Expressway (I-495), west on Long Island Expressway (1-495) to Brooklyn Queens Expressway (I-278), west on Brooklyn Queens Expressway (I-278) to Brooklyn or Staten Island wharfs or piers as per routes set forth in R2707-02(d)(37) or (39).

(B) South on Major Deegan Expressway (I-87) from Cross Bronx Expressway or Upstate New York, to Robert F. Kennedy Bridge, across Robert F. Kennedy Bridge to Queens, exit and proceed east on Astoria Blvd.

(*1*) to 82nd Street, north on 82nd Street to LaGuardia Airport.

(*2*) to Brooklyn Queens Expressway (I-278), west on Brooklyn Queens Expressway (I-278) to Long Island Expressway (I-495), east on Long Island Expressway (I-495) to Van Wyck Expressway (I-678), south on Van Wyck Expressway (I-678) to JFK Airport.

(*3*) to Brooklyn Queens Expressway (I-278), west on Brooklyn Queens Expressway (I-278) to Brooklyn or Staten Island wharfs or piers as per routes set forth in R2707-02(d)(37) or (39).

(C) For return, reverse of routes set forth in R2707-02(d)(47)(A)(*1*), (A)(*2*), (A)(*3*), (B)(*1*), (B)(*2*), and (B)(*3*).

(e) Escort Requirements

(1) *Motor vehicles* transporting *hazardous materials* requiring *Department* fire apparatus escorts pursuant to FC2707.12, including *explosives* and *fireworks,* shall comply with the requirements of FC2707.12 and this section, including R2707-02(d)(6)(B). The *Department* reserves the right to require escorts for any *hazardous material* shipment when deemed necessary.

(2) Notification of arrival of shipments requiring fire apparatus escorts shall be made 48 hours in advance by calling the Operations Center at (718) 999-7900 and providing the name and address of shipper, carrier, description and size of *hazardous material* load, including net weight and United States Department of Transportation classification, point of entry into New York City and point of departure, with proposed routing. Arrangements for the escort shall be made at the time of such notification. The carrier will be notified of whom and when to call for final meeting arrangements when the carrier is within two (2) hours approach of New York City or ready to leave an airport or wharf or pier.

(3) *Explosives* shipments shall take the most direct permissible route through the City so as to minimize time of exposure within the City. Prior *Department* approval shall be obtained for any transfer of *explosives* on a wharf or pier; *explosives* shall then be loaded directly from the vehicle transporting the *explosives* to the vessel at a wharf or pier on the sailing date of the vessel, in accordance with Coast Guard Regulations, and, with respect to arriving shipments, directly from the vessel to the vehicle on the date of the vessel's berthing. No storage of *explosives* shall be permitted on wharfs, piers, warehouses, staging areas or other locations.

No wharf or pier shall be used for the transfer of *Division 1.1*, *1.2* or *1.3 explosives*, except *small arms ammunition*, or *fireworks* classified as *Division 1.4 explosives*, unless such transfer has been approved by the *Department* and a *permit* has been issued. Primacord, Cordeau Detonant Fuse or other high velocity fuses may not be trans-shipped via a wharf or pier in the City of New York.

(4) Escort rendezvous points at entries to New York City. Where *Department* escort is required, rendezvous with the *Department* escort shall be made at the appropriate entry point to the city as follows:

(A) From Long Island:

(*1*) From North Shore Long Island: Meet at the safety area of Westbound Long Island Expressway (I-495) on the right side between Lakeville Road and Little Neck Parkway.

(*2*) From South Shore Long Island: Meet at northwest corner of intersection of Sunrise Highway (State 27) between Hook Creek Blvd. and 246th Street.

(B) From New England or Upstate New York:

(*1*) New England Thruway (I-95) Southbound; exit at Connors Street exit, proceed on New England Thruway Service Road to Connors Street to meet *Department* escort.

(*2*) New York Thruway (I-87) Southbound; exit into Service Area of Major Deegan Expressway located between Westchester County line and the East 233rd street exit of the expressway, to meet *Department* escort.

(C) From New Jersey via:

(*1*) Goethals Bridge: Meet at Administration Building in the Toll Plaza.

(*2*) Bayonne Bridge: Meet at Administration Building in the Toll Plaza.

(*3*) Outerbridge Crossing: Meet at Administration Building in the Toll Plaza.

(*4*) George Washington Bridge: Meet at Administration Building in the Toll Plaza.

(D) From Airports:

(1) At JFK International Airport: Meet in front of the Major Robert Fitzgerald Building #111 on the inbound service road of the Federal Circle.

(2) At LaGuardia Airport - Meet at Marine Air Terminal Port Authority of New York and New Jersey Police Building, entering at 82nd Street entrance to LaGuardia Airport.

(f) Seizure of Contraband Materials and Vehicles Transporting Contraband Materials

(1) In addition to any other penalties provided by law, rule or regulation, pursuant to FC104.5.1 and R104-03, *hazardous material* transported in violation of the Fire Code and this section, and the vehicle in which it is being transported, are liable to seizure and disposal by the *Department* or other law enforcement agency having jurisdiction.

(2) Seizure of contraband is in addition to other penalties, criminal liability, and violations, including those prescribed by FC 109.2.1 and 109.2.3 and the New York State Penal Code.

CHAPTER 28
AEROSOLS

§2801-2806 Reserved

§ 2801-2806 Reserved

CHAPTER 29
COMBUSTIBLE FIBERS

§2901-2906 Reserved

§ 2901-2906 Reserved

CHAPTER 30
COMPRESSED GASES

§3001-3003 Reserved
§3004-01 Carbon Dioxide
§3004-02 Anhydrous Ammonia
§3005-3008 Reserved

§ 3001-3003 Reserved

§ 3004-01 Carbon Dioxide

(a) Scope. This section sets forth standards, requirements and procedures for the storage, *handling* and use of carbon dioxide, in gaseous or liquid form.

(b) General Provisions

(1) Applicability. Carbon dioxide *containers* and systems shall be designed, installed, operated and maintained in compliance with the requirements of FC Chapter 30, this section, and as to matters not specifically set forth in the Fire Code or this section, Compressed Gas Association standards CGA G-6-1984 and G-6.1-1986. The provisions of this section shall not apply to the storage, *handling* and use of carbon dioxide in any *refrigerating system*, or to any portable carbon dioxide fire extinguisher or *carbon dioxide fire extinguishing system*, except as provided in R3004-01(d)(2).

(2) Periodic inspections

(A) Stationary *containers* and ancillary equipment shall be maintained in good working order, and visually inspected not less than once a month by the *certificate of fitness* holder.

(B) An inspection tag shall be affixed to every carbon dioxide *container* to document the following information:

(*1*) the date of the inspection;

(*2*) whether the system is in good working order; and

(*3*) the name and certificate number of the *certificate of fitness* holder that performed the inspection.

(c) Design and Installation Requirements

(1) Installation standard. Carbon dioxide systems shall be installed in accordance with the *Building Code* (including floor load limitation, wall piercing requirement or any other requirement affecting the integrity of a building member), *Mechanical Code* (including any ventilation requirements), Compressed Gas Association standards CGA G-6-1984 and G-6.1-1986, and the equipment manufacturer's design specifications and instructions.

(2) Overfill prevention. Automatic or *approved* manual means of preventing overfilling of the *container* shall be provided.

(3) Fill connections

(A) Separate fill connections. Each low pressure stationary *container* shall have its own fill connection and related piping.

(B) Location

(*1*) The fill connection shall be located so as not to impede *means of egress* or the operation of sidewalk cellar entrance doors, including during the delivery process.

(*2*) Fill connections shall be located outdoors, at least three (3) feet from the hinged side of any door.

(4) Piping systems

(A) Type of piping. Piping, hose, fittings and other equipment that comes in contact with carbon dioxide shall be metallic, certified by the manufacturer as suitable for carbon dioxide use and for the operating temperature and maximum operating pressure of the carbon dioxide system. For soda carbonation installations, the hose from the dispenser regulator to the dispenser may be nonmetallic, provided the operating pressure is less than 125 *psig*.

(B) Fill and vent line design temperatures. Fill and vent lines shall be hard piped and designed to withstand a temperature of minus 110°F.

(C) Type of valves, pressure regulators, and pressure relief valves. Valves, pressure regulators and pressure relief devices shall be suitable for carbon dioxide use and rated for the operating temperature and maximum operating pressure of the carbon dioxide system.

(D) Piping pressure relief valves. Where liquid carbon dioxide can become trapped in the piping, pressure relief devices shall be provided. Pressure relief valves and vent lines from pressure relief valves shall not be provided with shut off valves or other obstructions which could render such valves inoperable. Pressure relief devices shall discharge in a manner designed to prevent harm to the public or delivery person.

(E) Container pressure relief valves. Every *container* which contains more than 60 pounds of carbon dioxide shall have its *container* pressure relief valves discharge outdoors. Every pressure relief valve protecting piping shall discharge outdoors. The soda carbonation dispensing pressure regulator relief valve is not required to discharge outdoors.

(F) Vent line pressure relief valves. Vent lines from pressure relief valves shall be of such a size, length and arrangement so as not to interfere with the proper operation of the valves. The size of the vents of pressure relief devices shall be equal or larger in size than the pressure relief device outlet size.

(G) Soda carbonation regulators. For soda carbonation installations, the dispenser pressure regulator shall be designed to fail in the closed position.

(H) Supports and protection. Piping shall be securely supported and braced, and installed with due allowance for thermal expansion and contraction. Expansion joints shall not be used. Piping shall be protected from physical damage.

(I) Insulation. Insulation for carbon dioxide *containers* and ancillary equipment shall be of a noncombustible material.

(d) Operational Requirements

(1) Filling of containers

(A) Filling limits and restrictions

(*1*) It shall be unlawful to fill high-pressure carbon dioxide *containers* from a *cargo tank*.

(*2*) Each low pressure carbon dioxide *container*, as defined in CGA Standard G-6.1-1986, shall not be filled to exceed 90 percent of its volumetric capacity at the *maximum allowable working pressure* of the *container*.

(2) Supervision. The filling of a carbon dioxide *container* from any source shall be performed under the *personal supervision* of a *certificate of fitness* holder.

(3) Installation acceptance testing. The piping system shall be pressure tested for leaks upon installation. The test is successful if there are no leaks when a test pressure of not less than 100 percent of the normal operating pressure is maintained for a period of time necessary to detect any leak, but in no case for less than one half hour.

(4) Periodic testing and recordkeeping. The piping system shall be retested for leaks at least once every ten (10) years, or upon order of the *Department*. The piping system shall not be subjected to a pressure that exceeds its *maximum allowable working pressure*.

(5) Cargo tank deliveries. Carbon dioxide containers shall be filled from *cargo tanks* in compliance with the following requirements:

(A) the *container* shall not be subjected to a pressure that exceeds its *maximum allowable working pressure*; and

(B) the piping system shall not be subjected to a pressure that exceeds its *maximum allowable working pressure*.

(6) Notification of leaks. The *owner* or operator of any carbon dioxide system who becomes aware of any leak from the *container* or ancillary equipment, or other indication that the system is not in good working order, shall promptly notify the *certificate of fitness* holder. Such system shall be promptly restored to good working order.

(7) Storage room signage required. Warning signs shall be conspicuously posted at all entrances to any room in which a carbon dioxide *container* is located stating, reading "WARNING: CARBON DIOXIDE STORAGE. CARE MUST BE TAKEN TO AVOID SUFFOCATION AND ASPHYXIATION."

(8) Fill connection signage. Fill connections shall have a label affixed indicating the *maximum allowable working pressure* of the system.

§ 3004-02 Anhydrous Ammonia

(a) Scope. This section sets forth the design, installation, operation and maintenance requirements for the storage, *handling* and use of anhydrous ammonia.

(b) General Provisions. Anhydrous ammonia *containers* and systems shall be designed, installed, operated and maintained in compliance with the requirements of FC Chapter 30, this section, and as to matters not specifically set forth in the Fire Code or this section, Compressed Gas Association's Standard G-2 (8th edition). The provisions of this section shall not apply to the storage, *handling* and use of anhydrous ammonia in any *refrigerating system*.

§ 3005-3008 Reserved

CHAPTER 31
CORROSIVE MATERIALS

§3101-3105 Reserved

§ 3101-3105 Reserved

CHAPTER 32
CRYOGENIC FLUIDS

§3201-3206 Reserved

§ 3201-3206 Reserved

CHAPTER 33
RESERVED

CHAPTER 34
FLAMMABLE AND COMBUSTIBLE LIQUIDS

§3401-3403 Reserved
§3404-01 Out-of-Service Storage Systems
§3404-02 Precision Testing of Certain Underground Storage Systems
§3404-03 Indoor and Aboveground Combustible Liquid Storage Systems
§3405-01 Storage and Use of Fuel Oil on Mobile Trailers for Heating and Power Generation
§3406-01 Storage of Flammable and Combustible Liquids on Roofs at Construction Sites

§ 3401-3403 Reserved

§ 3404-01 Out-of-Service Storage Systems

(a) Scope. This section sets forth requirements for out-of-service storage systems for gasoline, diesel, fuel oil and other *flammable* or *combustible liquids* that are not in use for 30 days or more, except when such systems are used for seasonal or standby storage and are not otherwise permanently out of service.

(b) Definitions. The following terms shall, for purposes of this section and as used elsewhere in the *rules*, have the meanings shown herein:

Permanently out-of-service storage systems. Storage systems that are no longer to be used for storing gasoline, diesel, fuel oil or other *flammable* or *combustible liquids* or that have not been used for one (1) year or more. The *Department* may deem a storage system permanently out of service and require that it be closed accordingly where it has not been closed and maintained as a *temporarily out-of-service storage system* and the circumstances of an actual or anticipated change in use or occupancy of the *premises* at which the storage system is located indicate that any further use of such storage system cannot be reasonably anticipated.

Temporarily out-of-service storage systems. Storage systems for gasoline, diesel, fuel oil or other *flammable* or *combustible liquids* that have not been used for 30 days or more, but less than one (1) year.

(c) Temporarily Out-of-Service Storage Systems

(1) Supervision

(A) For motor fuel or other *flammable* or *combustible liquid* storage systems, the closure shall be performed by a person holding a *certificate of license* or by a person who is employed and supervised by a person holding such certificate.

(B) For fuel oil storage systems with a total capacity exceeding 330 gallons, the closure shall be performed by a person holding a *certificate of license* or by a person who is employed and supervised by a person holding such certificate, or a person holding an oil-burning equipment installer license issued by the *Department of Buildings* or by a person who is employed by and under the direct supervision of a person holding such license.

(C) For fuel oil storage systems with a total capacity of 330 gallons or less, the closure shall be performed by a person holding a *certificate of license* or by a person who is employed and supervised by a person holding such certificate, by a person holding an oil-burning equipment installer license issued by the *Department of Buildings* or by a person who is employed by and under the direct supervision of a person holding such license, or a plumber licensed by the *Department of Buildings*.

(2) Affidavit of compliance. The *owner* or operator of a *temporarily out-of-service storage system* or the *permit* holder for such system shall file with the *Department* an affidavit certifying that such system has been safeguarded in compliance with the requirements of FC Chapter 34 and this section. Such affidavit shall be executed by a person with the requisite qualifications to supervise the closure of such tanks.

(3) Permits and testing

(A) All storage systems which have been rendered temporarily out of service shall continue to be subject to the *Department*'s *permit* and testing requirements and the registration, reporting, inspection and testing regulations of the New York State Department of Environmental Conservation.

(B) Before a *temporarily out-of-service storage system* may be restored to service, an affidavit of compliance shall be filed with the *Department* in

accordance with R3404-01(c)(2), certifying the integrity of the tank and piping, and the proper functioning of any leak detection and cathodic protection systems.

(d) Permanently Out-of-Service Storage Systems

(1) Supervision

(A) For motor fuel or other *flammable* or *combustible liquid* storage systems, the closure shall be performed by a person holding a *certificate of license* or by a person who is employed and supervised by a person holding such certificate.

(B) For fuel oil storage systems with a total capacity exceeding 330 gallons, the closure shall be performed by a person holding a *certificate of license* or by a person who is employed and supervised by a person holding such certificate, or a person holding an oil-burning equipment installer license issued by the *Department of Buildings* or by a person who is employed by and under the direct supervision of a person holding such license.

(C) For fuel oil storage systems with a total capacity of 330 gallons or less, the closure shall be performed by a person holding a *certificate of license* or by a person who is employed and supervised by a person holding such certificate, by a person holding an oil-burning equipment installer license issued by the *Department of Buildings* or by a person who is employed by and under the direct supervision of a person holding such license, or a plumber licensed by the *Department of Buildings*.

(2) Affidavit of compliance. The *owner* or operator of a *permanently out-of-service storage system* or the *permit* holder for such system shall file with the *Department* an affidavit certifying that such system was removed and disposed of, or abandoned in place, in compliance with the requirements of FC Chapter 34 and this section. Such affidavit shall be executed by a person with the requisite qualifications to supervise the closure of such tanks.

(3) Environmental site assessment. If an environmental site assessment is required by federal or state law or regulations, the *owner* or operator of the storage system, the *permit* holder for such system, or the person filing the affidavit of compliance for such system, shall submit to the *Department* a written statement that such environmental site assessment has been performed in accordance with such law and regulations.

§ 3404-02 Precision Testing of Certain Underground Storage Systems

(a) Scope. This section sets forth standards, requirements and procedures for precision testing pursuant to FC3404.2.11.6 of underground storage systems for *motor fuels* or other *flammable* and *combustible liquids* when such systems utilize single-walled tanks, or other tanks not provided with a leak detection system meeting Fire Code requirements.

(b) General Provisions

(1) Applicability. Precision testing of underground storage systems for *motor fuels* or other *flammable* and *combustible liquids* that utilize single-walled tanks, or other tanks not provided with a leak detection system meeting Fire Code requirements, shall be conducted in compliance with the requirements of FC Chapters 22 and 34 and this section.

(2) Precision testing standard. Precision testing of underground storage systems shall be conducted in accordance with National Fire Protection Association (NFPA) Standard 329 (2005 edition).

(3) Supervision.

(A) Certificate requirements. Precision testing of underground storage systems shall be conducted by a person holding a *certificate of license* or under the general supervision of a *certificate of license* holder. Such person shall be trained and knowledgeable in the use of the precision test equipment and procedures for the conduct of the particular precision test. Any person conducting such test under the supervision of a *certificate of license* holder shall hold a *certificate of fitness* for such precision test. A separate *certificate of fitness* shall be obtained for each type of precision test system.

(B) Presence on premises. The certificate holder conducting the precision test shall remain on the *premises* while such test is being conducted and until the system has been returned to good working order in accordance with R3402-02(c)(1)(C).

(c) Operational Requirements

(1) Administrative requirements

(A) Notification of tests. Prior to conducting a precision test of a underground storage system, notification shall be made to the *Bureau of Fire Prevention* by calling the telephone number designated by the Bulk Fuel Unit. Tests may be witnessed by a *Department* representative. Tanks located within buildings shall not be tested unless prior *Department* approval is received.

(B) Submission of test results. A report of the results of the precision test shall be submitted to the Bulk Fuel Unit of the *Bureau of Fire Prevention* on an *approved* form no later than 30 days after conducting the test. Such test report shall include the name and *certificate of fitness* number of the person who conducted the test, as well as the name and signature of the *certificate of license* holder under whose supervision the test was conducted.

(C) Notification of defective storage systems. Underground storage systems shall be returned to service in good working order upon completion of the precision testing. Storage systems determined to be defective shall be removed from service in accordance with applicable laws, rules and regulations. If *hazardous material* has been released to the environment, notification shall be immediately made to the *Department* and the New York State Department of Environmental Conservation.

(2) Testing equipment requirements

(A) Only approved precision testing systems shall be used for precision testing of underground storage systems. Such testing systems, including hoses and other devices and components, shall be designed for twice the maximum operating pressures of the pressures generated by the precision test system, and shall be compatible with the *hazardous material* stored in the tank to be precision tested.

(B) All testing equipment to be placed in the storage tank, or used in the vicinity of the test area, shall be intrinsically safe or suitable for use in hazardous locations.

(C) Interlocks shall be provided for all electrical connections to ensure that the system is grounded before power can be supplied.

(3) Testing procedures

(A) The test area shall be cordoned off by portable barricades, signs, rope or tape to prevent unauthorized persons and motor vehicles from entering the area. Signs posted at the barricade perimeter shall be provided to read "NO SMOKING-NO OPEN FLAMES".

(B) All sources of ignition, including all *motor vehicles*, shall be removed from the testing area.

(C) *Approved* procedures shall be used in filling tanks and piping for precision testing, to ensure safety and prevent overfilling. Filling of tanks shall only be conducted through *approved* fill boxes from *approved cargo tanks* and/or *approved safety cans*. For purposes of topping off the tank or the

test equipment, *flammable* and *combustible liquids* shall be drawn from an *approved* storage system on the *premises* into an *approved* safety can not exceeding a capacity of two and one half (2½) gallons. *Flammable* and *combustible liquids* may not be withdrawn from the fuel tanks of *motor vehicles*.

(D) To avoid erroneous results, each precision test shall compensate for temperature changes, tank-end deflection, air pockets, water tables and other variables, as set forth in NFPA 329, to avoid erroneous results.

(E) Tests shall be conducted for the period of time recommended by the manufacturer of the particular precision testing system, or until accurate results can be obtained.

(F) If test wells must be drilled on the site to locate the water table, the *certificate of license* holder shall take all necessary steps to ensure that such test wells do not disturb utility infrastructure.

(G) When underground storage systems storing liquid of varying or unknown coefficients of thermal expansion are to be tested, the liquid shall be removed, the tank cleaned, and the test conducted using a material of similar viscosity and a known coefficient of expansion.

(H) Power to electrical equipment shall not be turned on until all electrical connections have been made. The connection to the power source shall be the final connection made.

(I) Precision testing systems shall be arranged such that rain water cannot enter the tank through the tank openings.

(d) Portable Fire Extinguisher Requirements

(1) A portable fire extinguisher having at least a 40-B:C rating shall be readily accessible during testing. The maximum travel distance to the fire extinguisher shall be 30 feet and the portable fire extinguisher shall be positioned at a safe location within the testing area.

§ 3404-03 Indoor and Aboveground Combustible Liquid Storage Systems

(a) Scope. This section sets forth requirements for the design and installation of indoor, aboveground *combustible liquid* storage systems, except fuel oil storage tanks and auxiliary storage tanks for oil-burning equipment regulated by the *Mechanical Code*, or to the installation of liquid motor fuel-dispensing storage tanks.

(b) General Provisions. Indoor aboveground *combustible liquid* storage tanks shall comply with the requirements of FC Chapters 27 and 34 and this section.

(c) Design and Installation Requirements

(1) Location of tanks. *Combustible liquid* storage tanks shall preferably be installed on the floor at grade level. *Combustible liquid* storage tanks may also be installed on floors not more than two (2) floors below grade level.

(2) Fire-rated separation of tanks

(A) *Combustible liquid* storage tanks having an individual or aggregate capacity of more than 550 gallons but less than 1,100 gallons in a single *control area* shall be completely enclosed within noncombustible construction having at least a two (2) hour fire resistance rating.

(B) *Combustible liquid* storage tanks having an individual or aggregate capacity of 1,100 gallons or more in a single *control area* shall be completely enclosed within noncombustible construction having at least a three (3) hour fire resistance rating.

(3) Sprinkler system protection

(A) Any floor below grade level upon which a combustible liquid storage tank is installed shall be protected throughout by a sprinkler system, except that that when the combustible liquid storage tank will only store a *combustible liquid* with a *flash point* of 200°F or greater, and the room or area is segregated, vertically and horizontally, from surrounding spaces by a fire separation of not less than two (2) hour fire resistance rating, only the room or area housing such tank need be protected by a *sprinkler system*.

(4) Piping systems

(A) General requirements

(*1*) Exposed piping shall be protected against mechanical damage and shall be adequately supported with rigid metal fasteners or hangers.

(2) Only new wrought iron, steel, or brass pipe, or type K or heavier copper tubing shall be used. Metal tubing used as transfer piping shall be adequately protected.

(*3*) Overflow pipes, where installed, shall not be smaller in size than the supply pipe.

(*4*) Pipe shall be connected with standard components, and tubing with components listed or approved for the same material as the pipe, except that malleable iron fittings may be used with steel pipe. Cast iron fittings shall not be used. All threaded joints and connections shall be made liquid-tight with suitable pipe compound. Unions requiring gaskets or packing, right or left couplings and sweat fittings employing solder having a melting point of less than 1,000°F shall not be used.

(B) Piping from storage tank to equipment on other floors

(*1*) Piping from a transfer pump to manufacturing, process or other equipment installed on other floors, including *combustible liquid* return and vent piping, shall comply with the applicable provisions of R3404-03(c)(4) and shall be enclosed in a shaft constructed of four (4) inch concrete or masonry, having a four (4) inch clearance from all pipe or pipe covering, except that no such enclosure shall be required within the room containing the pump, tank, or equipment where such room is itself enclosed with construction and materials having at least a 2-hour fire-resistance rating. Provisions shall be made for expansion in piping without the use of expansion joints.

(*2*) Where it is necessary to make horizontal offsets in supply piping, upon exiting the shaft, such piping shall be enclosed in a sleeve of other piping of at least number ten (10) gauge steel, two (2) sizes larger and arranged to drain into the shaft. Horizontal piping offsets shall be further enclosed in construction having a two (2) hour fire resistance rating, except that no such enclosure shall be required within the room containing the pump, tank, o equipment where such room is itself enclosed with construction and materials having at least a 2-hour fire-resistance rating.

(*3*) A drain pipe shall be installed at the base of the shaft enclosing the supply and overflow piping. The pipe shall lead to a dedicated sump or *container* with a capacity of at least 55 gallons. Such sump or *container* shall be equipped with a leak detection system alarm, arranged so as to sound an alarm and stop the transfer pump. The alarm shall be connected to a local audible alarm and to a remote alarm located at a supervising station. The wiring shall comply with the *Electrical Code*.

(*4*) Piping shall be seamless steel pipe of a weight not less than ASA Schedule 40, with welded connections up to the equipment, except that fittings at the tank or equipment, shutoff valves and other

combustible liquid flow and control devices may be screwed or flanged.

(*5*) Pipe shafts shall not be penetrated by or contain other piping or ducts.

(5) Transfer of combustible liquids between floors

(A) A clearly identified and readily accessible remote control switch shall be provided on each floor to which *combustible liquid* is transferred. Such switch, when manually activated, shall cause shut down of the transfer.

(B) A visual indicating device shall be provided in the discharge area that indicates when the pump is running.

§ 3405-01 Storage and Use of Fuel Oil on Mobile Trailers for Heating and Power Generation

(a) Scope. This section sets forth standards, requirements and procedures for mobile trailers that store and use fuel oil for heating and generation of electrical power.

(b) General Provisions

(1) Applicability. Mobile trailers that store and use fuel oil for heating, including steam and hot water, and generation of electrical power, shall be designed, installed and operated in compliance with the requirements of the *construction codes* and this section.

(2) Permit. Each mobile heating or power generating trailer shall obtain a *permit* for the citywide transportation, storage and use of *combustible liquid*. Mobile heating and power generating trailers utilized at one (1) site for more than 30 days shall obtain a site-specific *permit* for the storage and use of *combustible liquid* at that location.

(3) Supervision. While in operation, mobile emergency heating and power generating trailers shall be under the *personal supervision* of a *certificate of fitness* holder or a person holding a high pressure boiler operating engineer's license issued by the *Department of Buildings*.

(4) Delivery of fuel oil. Only *cargo tanks* for which a *permit* has been issued may be used to deliver fuel oil to mobile heating and power generating trailers.

(c) Design and Installation Requirements. Mobile heating and power generating trailers using fuel oil shall be designed and installed in compliance with the following requirements:

(1) Fuel oil piping systems and boilers shall be designed and installed in compliance with the requirements of the *Mechanical Code*. The power generating equipment, and all electrical devices, equipment and systems on the trailer shall be designed and installed in compliance with the requirements of the *Building Code* and the *Electrical Code*. Documentation of compliance with such codes shall be submitted to the *Department* in an *approved* form.

(2) Fuel oil storage tanks shall be constructed in accordance with the requirements of the *Mechanical Code*. No more than 550 gallons of fuel oil shall be stored on the trailer.

(3) A clearly identified and readily accessible remote control shut-down switch for the oil burning equipment shall be provided inside the trailer, immediately accessible upon entry.

(4) The chassis shall be designed and constructed to support the total load supported by the trailer, including all heating or power generating equipment. The *Department* may require a letter from the chassis manufacturer confirming such design capacity.

(5) Fuel oil storage tanks shall be provided with secondary containment of *liquid-tight construction*. Such containment shall be constructed of metal, and shall have a capacity of not less than the maximum capacity of the fuel oil storage tanks.

(6) Signs shall be posted on both sides of the trailer that read: "Mobile Heating Trailer" or "Mobile Power Generator", as applicable, in six (6) inch letters, and bear the name and address of the owner in two (2) inch letters.

(7) The trailer and equipment shall be electrically grounded in an *approved* manner.

(8) Each fuel oil storage tank fill line shall be provided with both a shut-off valve and a check valve.

(9) *Department of Buildings* permits or other approvals shall be posted at a conspicuous location inside the trailer.

§ 3406-01 Storage of Flammable and Combustible Liquids on Roofs at Construction Sites

(a) Scope. This section sets forth requirements for storage and use of *flammable* and *combustible liquids* on roofs at *construction sites*.

(b) Storage Requirements. Where *flammable* or *combustible liquids* in use at a *construction site* are not removed from the job site at the end of the workday they shall be stored in a

metal *flammable liquid* storage cabinet when not in use. *Flammable* or *combustible liquids* may be stored on a roof in connection with work on a roof in a quantity not to exceed one (1) day's supply, but in no case more than 20 gallons.

CHAPTER 35
FLAMMABLE GASES

§3501-3507 Reserved
§3508-01 Compressed Natural Gas
§3509-01 Sanitary Landfill Methane Gas Recovery Facilities
§3510 Reserved

§ 3501-3507 Reserved

§ 3508-01 Compressed Natural Gas

(a) Scope. This section sets forth standards, requirements and procedures applicable to the storage, *handling* and use of *CNG*. This section shall not apply to the following operations:

(1) the storage and use of *CNG* in a *non-production chemical laboratory*, the requirements for which are subject to the provisions of FC2706.

(2) the storage and filling of *containers* with *CNG* for use as a fuel in *motor vehicles* and other approved purposes, the requirements for which are subject to the provisions of FC2208.

(3) the storage and use of *CNG* in connection with special effects, the requirements for which are set forth in FC3309 and the rules.

(4) the transportation of *CNG*, the requirements for which are set forth in FC2707.

(b) General Provisions

(1) General CNG requirements. The provisions of this section shall be applicable to all *CNG* materials, operations and/or *facilities* as follows:

(A) All *CNG* storage, *handling* and use governed by this section shall comply with the *design and installation document*, *permit*, supervision, and general storage, *handling* and use requirements set forth in R3508-01(c), (d), (e) and (f).

(B) Outdoor and indoor *CNG* storage shall be in facilities that comply with the requirements for such facilities set forth in R3508-01(g) and (h).

(C) Stationary *CNG* installations shall comply with the requirements for such installations set forth in R3508-01(i).

(D) *CNG* storage, *handling* and use for the special applications set forth in R3508-01(j) (on construction sites, for emergency indoor repairs, for manhole operations, on *motor vehicles*, for mobile cooking uses, in commercial establishments, on moored vessels, torches used in the manufacture of jewelry, and use of *CNG* for emergency oil burner ignition) shall additionally comply with the applicable requirements of R3508-01(j).

(2) Special CNG authorizations. This section authorizes the following storage, *handling* and/or use of *CNG* that is prohibited by FC3508.3 except as authorized by the *Commissioner*:

(A) storage, *handling* and use of *CNG* below grade for emergency indoor repairs, as set forth in R3508-01(j);

(B) storage, *handling* and use in, and bringing or allowing into, residential occupancies or on lots containing a building used for a residential occupancy, of *CNG container*s with a capacity greater than 8.7 *SCF*, as set forth in R3508-01(j);

(C) storage, *handling* and use in, and bringing or allowing into, any non-residential building, of *CNG container*s with a capacity greater than 8.7 *SCF*, as set forth in R3508-01(h) and (j);

(D) *handling* and use on the roof of any building of *CNG container*s with a capacity greater than 8.7 *SCF*, as set forth in R3508-01(j);

(E) storage, *handling* or use of *CNG* for stationary *CNG* installations in any area where access to *piped natural gas* from a public utility is available, as set forth in R3508-01(j);

(F) storage, *handling* and use of *CNG* for space heating or water heating, as set forth in R3508-01(j); and

(G) use of nonmetallic pipe, tubing and components for devices, equipment and systems utilizing *CNG*, as set forth in R3508-01(j).

(c) Design and Installation Documents

(1) When required. All *CNG* indoor and outdoor storage facilities shall be in facilities approved by the *Department*. All *CNG* storage, *handling* and use for stationary *CNG* installations shall be for installations *approved* by the *Department*. *Design and installation document*s for such storage facilities and stationary installations shall be submitted to the *Department* for review and *Department* approval obtained prior to any *CNG* storage or use.

(2) Applications. *Applications* for *design and installation document* approval shall be made by or on behalf of the person who will be storing, *handling* or using the *CNG*, and submitted to the *Bureau of Fire Prevention* at Fire Department Headquarters prior to any *CNG* storage, *handling* or use. *Applications* for *CNG* installations other than on *construction sites* shall include a copy of the altered building application or other documentation filed with and approved by the *Department of Buildings* or other agency having jurisdiction over the installation.

(3) Upon completion of any stationary *CNG* installation, an affidavit executed by the installer or *plumber* responsible for the installation certifying that the installation conforms to the requirements of this section and FC Chapter 35 shall be submitted to the *Bureau of Fire Prevention* at Fire Department Headquarters.

(d) Permits

(1) When required. A *CNG permit* shall be obtained from the *Department* for the storage, *handling* or use of *CNG* as set forth in FC105.6.

(2) Applications. *Applications* for issuance of a *CNG permit* shall be made by or on behalf of the person who will be storing, *handling* or using the *CNG*. *Applications* shall be submitted to the *Bureau of Fire Prevention* at Fire Department Headquarters prior to any *CNG* storage, *handling* or use.

(3) Availability of piped natural gas. A *CNG permit* will not be issued by the *Department* for a stationary *CNG* installation located in an area where access to *piped natural gas* from a public utility is available. Any *CNG* storage and use pursuant to a *permit* issued on or after July 1, 2003 for a stationary *CNG* installation located in an area where access to *piped natural gas* from a public utility is not available shall be discontinued and all *CNG container*s removed from the *premises* within five (5) years of the date such access becomes available, and no such *permit* shall be renewed beyond such five-year period.

(e) Supervision

(1) The storage, *handling* and use of *CNG* shall be supervised as set forth in FC3501.4.2 and this section.

(2) The connecting and disconnecting *CNG container*s with a capacity greater than 8.7 *SCF* shall be performed by a person holding a *certificate of fitness*. When

such connecting and disconnecting is performed by a *CNG* supplier or distributor, a card or tag shall be conspicuously posted at the *premises* identifying the name and address of the supplier or distributor, the name of the *certificate of fitness* holder, and the number and expiration date of the *certificate of fitness*.

(f) General Storage, Handling and Use Requirements

(1) All devices, equipment and systems used for the storage or use of *CNG* shall be *approved* or *listed* by a nationally recognized testing laboratory.

(2) All devices, equipment and systems used for the storage or use of *CNG* shall be maintained and operated in accordance with the manufacturer's specifications.

(3) Only metallic pipe, tubing and components shall be used for *CNG* installations, appliances and equipment, except as provided in R3508-01(j)(2)(E), (j)(3)(B), (j)(4)(D), (j)(7)(D), (j)(9)(H) and (j)(10)(C). Where use of nonmetallic hose is allowed by this section, such hose shall be protected from twisting, abrasion and damage by proper installation and maintenance. Hoses showing any kind of defects, including burns or signs of wear, shall be rendered unsuitable for service and shall be replaced.

(4) Flexible metallic or nonmetallic hose shall be either:

(A) stamped by the manufacturer with the *maximum allowable working pressure* of 350 *psig*; or

(B) certified by the manufacturer as suitable for a working pressure of 350 *psig*.

(5) *CNG containers* shall be stored in an upright position and secured to prevent movement.

(6) *CNG container*s shall not be stored on shelves.

(7) All connection and disconnection of *CNG container*s for use shall be performed outdoors, except as otherwise authorized by this section. Where *CNG* use is allowed indoors, all connection and disconnection of *CNG container*s shall be performed in a well-ventilated area.

(8) *CNG container*s connected for use shall be adequately supported and braced.

(9) *CNG container*s connected for use shall be placed on a firm and noncombustible foundation.

(10) *CNG* devices, equipment and systems shall be maintained at all times in a gas-tight condition. Any appliance, equipment or component which is not in a gas-tight condition shall be removed from use and promptly repaired or lawfully disposed of.

(11) Each time a connection is made to a *CNG container*, or a leak is suspected, the connection shall be tested by the application of a soap solution or its equivalent to joints, valves and fittings. Open flames shall not be used to test connections for leaks.

(12) *CNG container*s shall be protected at all times from the effects of weather and physical damage.

(13) *CNG* shall be stored and used only if all safety devices on the equipment and systems are in good working order. Such devices shall not be disconnected or defeated. Any appliance or equipment with a safety device that is not in good working order shall be removed from use and promptly repaired, or lawfully disposed of.

(14) Any empty *CNG container* that at any time previously has been filled with *CNG* shall be treated as though it contains *CNG*, and shall be stored and used in the same manner as a full *CNG container*, including storage in a storage facility in accordance with this section. Damaged or otherwise unusable *CNG containers* shall be promptly removed from the *premises* and lawfully disposed of.

(15) Warning signs complying with the *OSHA* requirements, as set forth in Section 1910.145(D) of Part 1910 of Title 29 of the Code of Federal Regulations, shall be conspicuously posted at each *CNG* installation, storage location or use site. Such signs shall be at least ten (10) inches by fourteen (14) inches in size and shall bear the wording "DANGER - FLAMMABLE GAS - KEEP FIRE OR FLAME AWAY - NO SMOKING" in lettering at least two (2) inches high. The word "Danger" shall be in white on a red oval bordered in white which shall be on a black background at the upper part of the sign. The other required wording shall be in black on a white background in the lower part of the sign.

(16) A *CNG container* shall not be moved unless the *container*'s valves are closed, except when the *container* is mounted on a *motor vehicle* for use as a fuel for motive power.

(17) *CNG containers* shall not be rolled or dragged on their side or rims. *CNG containers* shall only be moved by lifting and lowering, by hand or with equipment designed for such purposes.

(18) *CNG containers* shall not be dropped or thrown from any height.

(g) Outdoor Storage Facilities

(1) Except as otherwise provided in this section, all *CNG containers* shall be stored outdoors in a facility that conforms to the requirements of this section. In addition to complying with the requirements of FC 2703.12 and 3504.2, Table 3504.2.1, all outdoor *CNG container* storage facilities shall be:

(A) not more than 54 square feet in area;

(B) protected from vehicle impact;

(C) protected from theft, tampering or unauthorized use by a metal open fence enclosure at least six (6) feet in height, and secured by a locked gate opening outward or a lockable ventilated metal locker of a type acceptable to the *Department*. Such fence enclosure or locker shall be mounted on and secured to a substantial concrete pad at grade level, which pad shall be constructed to prevent accumulation of rain and snow;

(D) located in a well ventilated area;

(E) directly accessible from the street. *CNG containers* being delivered to or taken from an outdoor storage location shall not be brought into or through any building or other structure; and

(F) provided with a portable fire extinguisher with at least a 10-B:C rating. Such portable fire extinguisher shall be located in a protective enclosure and affixed to the outside of the storage facility or placed at another readily accessible location not more than 30 feet from the facility.

(2) No more than 2,500 *SCF* of *CNG* shall be stored in a *pre-existing* outdoor *CNG* storage facility unless such facility complies with the current Fire Code and rule requirements.

(3) No outdoor *CNG* storage facility shall be located on a lot containing any building used for residential purposes.

(4) No outdoor *CNG* storage facility shall be located within:

(A) ten (10) feet of the nearest lot line, sidewalk or building on an adjoining lot, except as follows:

(*1*) no outdoor *CNG* storage facility shall be located within 50 feet from any building occupied as a multiple dwelling; and

(*2*) no outdoor *CNG* storage facility shall be located within 100 feet of the lot line of any property occupied for educational, health care or religious purposes;

(B) ten (10) feet of any authorized parking for *motor vehicles*;

(C) ten (10) feet of any combustible material;

(D) 15 feet of any vent or fill line of any *flammable liquid* or *combustible liquid* storage tank; and

(E) 20 feet of any aboveground *flammable liquid* or *combustible liquid* storage tank.

(h) Indoor CNG Storage

(1) Except as provided in R3508-01(j), indoor storage of any *CNG container* with a capacity greater than 8.7 *SCF* of gas is prohibited in any residential occupancy and in any building where an outdoor storage location for such *CNG container* is available.

(2) All indoor storage of *CNG containers* authorized by this section shall be stored in a separate room that conforms to the requirements of this section. Any such room shall be:

(A) constructed in compliance with the *Construction Codes*, including the *Building Code*;

(B) constructed of walls, floors and ceilings having at least a two (2) hour fire resistance rating;

(C) constructed with an access door that opens directly to the outdoors;

(D) used for no other purpose; and

(E) provided with a portable fire extinguisher with at least a 10-B:C rating. Such portable fire extinguisher shall be affixed to the outside of the storage room or placed at another readily accessible location not more than 30 feet from the room entrance.

(3) No such room shall:

(A) be located at the property line adjoining a multiple dwelling, building occupied for educational, health care or religious purposes, place of public assembly, or other place of public gathering; and

(B) have ventilation openings located within five (5) feet of any building opening, including any doors, openable windows and intake and exhaust vents.

(4) All delivery and pick-up of *containers* to or from an indoor *CNG* storage facility shall be through the outdoors access door only, not through the building.

(i) Stationary CNG Installations. In addition to complying with the requirements of FC 2703.12 and 3504.2, and FC Table 3504.2.1, stationary *CNG* installations shall comply with the following requirements:

(1) All *CNG containers* connected for use in a stationary installation shall be stored outdoors.

(2) A single, accessible, outdoor, safely-located, and conspicuously-marked shutoff valve shall be provided wherever *CNG* piping enters a building or structure.

(3) A single, accessible, safely-located and conspicuously-marked shutoff valve shall be provided for each appliance connected to a *CNG container*.

(4) All new and repaired *CNG* piping shall be tested at one and one half (1½) times normal working pressure but not less than three (3) pound per square inch gauge, using air or inert gas. There shall be no drop in the shut-in pressure for a period of 30 minutes.

(5) When *CNG* is piped indoors, a sign at least ten (10) inches high and fourteen (14) inches wide shall be conspicuously posted at the entrance to the building and shall bear the wording "Danger-Piped Compressed Natural Gas."

(6) Metal pipe straps and hangers shall be suitable for the size of pipe and of such strength and quality that the piping cannot be accidentally dislodged. Spacing of hangers shall not exceed six (6) feet for one-half (½) inch pipe, eight (8) feet for three quarter (¾) and one (1) inch pipe, and ten (10) feet for one and one quarter (1¼) inch or larger pipe.

(7) No *CNG container* connected for use shall be located within:

(A) 50 feet from any building occupied as a multiple dwelling;

(B) 100 feet of the lot line of any property occupied for educational, health care or religious purposes;

(C) ten (10) feet of any combustible material; and

(D) 20 feet of any aboveground *flammable liquid* or *combustible liquid* storage tank.

(8) A portable fire extinguisher with at least a 10-B:C rating shall be provided whenever *CNG* is connected for use. The maximum travel distance to the portable fire extinguisher shall be 30 feet from the work location.

(j) Special Storage and Use Requirements

(1) All storage or use of *CNG* for the applications set forth in R3508-01(j) shall be in compliance with the respective requirements of R3508-01(j), in addition to the requirements set forth in R3508-01(c), (d), (e), (f) and (i).

(2) Construction sites

(A) A site-specific *permit* shall be obtained for *CNG* storage, *handling* and use on a *construction site*, except that a citywide *CNG permit* may be obtained for *tar kettle*, *asphalt melter* and torch operations where no reserve storage is needed and *CNG containers* are removed from the site at the end of each workday, and the construction work requiring *CNG* use is to be completed within 30 days of commencement.

(B) Except as provided in R3508-01(j)(2)(D), all *CNG* for use on *construction sites* shall be stored in outdoor storage facilities that comply with the requirements of R3508-01(g)(1)(B), (g)(1)(C) and (g)(1)(D). No *construction site* storage facility shall:

(*1*) have a capacity exceeding 21,250 *SCF* of *CNG* in any single facility or a total capacity at any construction site of 42,500 *SCF* of *CNG*;

(*2*) be within 50 feet of any *CNG* or other *flammable gas* storage facility;

(*3*) be within 25 feet of the building under construction;

(*4*) be within 50 feet of any aboveground *flammable liquid* or *combustible liquid* storage tank;

(*5*) be within 50 feet of any combustible material;

(*6*) be within 50 feet of any building occupied as a multiple dwelling;

(*7*) be within 100 feet of any subway entrance, exit, vent or other opening; and

(*8*) be within 100 feet of the lot line of any property occupied for educational, health care or religious purposes, place of public assembly, or other place of public gathering.

(C) Each *construction site* storage facility shall be provided with a portable fire extinguisher with at least a 40-B:C rating. Such portable fire extinguisher shall be kept outside of the storage facility or placed at another readily accessible location not more than 30 feet from the facility.

(D) *CNG containers* may be stored inside an unoccupied building under construction where no allowable outdoor location is available, provided that such *containers* are stored on the ground floor at a location acceptable to the *Department* that is as far as possible but in no event less than ten (10) feet

from any flue, stairwell, or elevator shaft, and the amount of *CNG* so stored is acceptable to the *Department* but in no event exceeds a total of 10,625 *SCF* of *CNG*. *CNG containers* may be stored at one additional location on the ground floor of the same building if a minimum separation distance of 70 feet between storage locations can be provided and maintained. The amount of *CNG* stored at such additional location shall not exceed 10,625 *SCF* of *CNG*.

(E) Pursuant to FC3508.3(14) and R3508-01(b)(2)(G), nonmetallic hose may be used at a *construction site* where:

(*1*) The construction activity does not allow use of stationary *CNG* devices, equipment or systems, necessitating a flexible connection between such device, equipment or system and the *CNG container*;

(*2*) The length of the hose does not exceed 30 feet;

(*3*) The hose is fabricated of materials that are designed for use with *CNG*; and

(*4*) The hose is color-coded red.

(F) Tar kettle and torch operations

(*1*) The use of *CNG*-fueled *tar kettles* shall be under the *personal supervision* of a *certificate of fitness* holder.

(*2*) All torch operations shall be performed by a *certificate of fitness* holder.

(*3*) It shall be unlawful for any person to operate, maintain or use a kindled *tar kettle* or torch in or on the roof of any building, except that torches may be used for emergency indoor repairs in accordance with R3508-01(j)(3), and may be used on the roof of any building having a roof of noncombustible construction.

(*4*) *Fire guards* shall be on continuous duty during all torch operations on the roof of a building. There shall be one *fire guard* on the roof for each torch operator, and there shall be at least one *fire guard* on the floor or level below the torch operation. Such *fire guards* shall not be assigned any duties other than to remain alert and guard against *fire*, and shall be alert to sparks, the transmission of heat, and the potential ignition of combustible material. Such *fire guards* shall be responsible for ensuring that fire extinguishing equipment is readily accessible from the time torch operations are commenced until an hour after such operations are completed.

(*5*) A *fire guard* shall inspect all areas exposed to the effects of torch operations after the completion of torch operations for the purpose of detecting *fires*. The first inspection shall be conducted one-half hour after completion of torch operations; the second inspection one hour after completion of torch operations. The *fire guard* shall prepare and sign an inspection report confirming the safe condition of the *premises*. Such report shall be submitted to and retained by the person in charge of the torch operations.

(*6*) A portable fire extinguisher with at least a 2-A:20-B:C rating shall be provided for each torch operation.

(*7*) All movement of *CNG containers* within a building shall be performed in the following manner:

(*a*) *CNG containers* at all times shall be moved under the *personal supervision* of a *certificate of fitness* holder. At no time shall the *containers* be left unattended.

(*b*) *CNG containers* shall be moved to another floor of the building only by freight elevator, construction elevator, or passenger elevator when approved, and such elevator shall be occupied only by those persons engaged in moving the *containers*. *CNG containers* may be moved in building stairwells if such stairwells are unoccupied.

(G) Asphalt melters

(*1*) CNG-fueled *asphalt melters* shall be stored, *handled*, used and maintained in the same manner as *LPG*-fueled *tar kettles*, including the provisions of FC303 and R3508-01(j)(2)(F).

(H) Curing and drying applications

(*1*) The use of *CNG* for curing concrete, drying plaster and similar applications shall be prohibited in any occupied building, any location within 50 feet of an occupied building, and any location within 100 feet of the lot line of any property occupied for educational, health care or religious purposes, a place of public assembly, or other place of public gathering.

(*2*) The use of *CNG* for curing concrete, drying plaster and similar applications shall be under the *personal supervision* of a *certificate of fitness* holder. The *certificate of fitness* holder shall inspect the area where *CNG containers* and heaters are in use on not less than

an hourly basis. The results of each inspection shall be recorded in a log book which shall be maintained on the *premises* and made available for inspection by any *Department* representative.

(*3*) Heaters used for curing concrete, drying plaster and similar applications shall be placed at least six (6) feet from any *CNG container* or combustible material, and ten (10) feet from any tarpaulin cover. Such heaters shall only be used in a well-ventilated area and shall not be placed on unprotected wood flooring.

(*4*) Pursuant to FC3508.3(14) and R3508-01(b)(2)(G), nonmetallic hose may be used at a *construction site* where flexibility is required for such operation, provided that:

(*a*) The length of the hose is as short as practicable, but in no circumstance exceeds 30 feet;

(*b*) The hose is fabricated of materials that are designed for use with *CNG*; and

(*c*) The hose is color-coded red.

(*5*) The total capacity of *CNG containers* shall not exceed 2,500 *SCF* when used in manifold to serve a heater.

(*6*) *CNG*/heater assemblies shall be provided with a portable fire extinguisher with at least a 20-B:C rating located not more than 30 feet away. A travel distance of up to 50 feet is allowed if a portable fire extinguisher with at least a 40-B:C rating is provided.

(3) Emergency indoor repairs

(A) Pursuant to FC3508.3(6) and (7) and R3508-01(b)(2)(B) and (C), *CNG* equipment and *containers* may be used indoors, except in an occupied place of public assembly, for the purpose of performing emergency repairs. Such *CNG* use shall be subject to the following requirements:

(*1*) *CNG* use at the work site shall be limited to two (2) *CNG containers*, each with a capacity not greater than 170 *SCF* of gas;

(*2*) *CNG containers* with a capacity greater than 8.7 *SCF* shall not be left unattended;

(*3*) All *CNG* use shall be under the *personal supervision* of a *certificate of fitness* holder; and

(*4*) All *CNG containers* shall be removed from inside the building at the end of the work day.

(B) Pursuant to FC3508.3(14) and R3508-01(b)(2)(G), flexible nonmetallic hose may be used for emergency indoor repairs where the nature of the repair work requires a flexible connection between the device, equipment or system and the *CNG container*, provided that:

(*1*) The length of the hose does not exceed six (6) feet;

(*2*) The hose is fabricated of materials that are designed for use with *CNG*; and

(*3*) The hose is color-coded red.

(C) Pursuant to FC3508.3(3) and R3508-01(b)(2)(A), a single *CNG container* with a capacity not greater than 8.7 *SCF* may be used below grade for emergency indoor repairs provided the *container* is not left unattended.

(4) Manhole operations

(A) *CNG containers* and heaters shall not be brought into manholes or located within six (6) feet of manhole openings. *CNG* torches may be operated in manholes provided such operation is in compliance with *OSHA* requirements.

(B) *CNG* storage, *handling* and use at each manhole work site shall be limited to two (2) *CNG containers*, each with a capacity not greater than 285 *SCF*. Such *CNG containers* shall be removed from the work site at the end of each work day unless they are stored in a tool cart that:

(*1*) is constructed of steel;

(*2*) has a door at least one quarter inch thick that is locked at all times;

(*3*) has not less than 100 square inches of fixed ventilation at the top with a suitable screen as a flash arrestor;

(*4*) has six-inch placards bearing United States Department of Transportation designation "1971" permanently affixed to two opposite exterior sides of the tool cart;

(*5*) has “No Smoking” signs permanently affixed to the tool cart in a conspicuous location;

(*6*) has the *CNG containers* positioned within the cart such that *container* shut-off valves are unobstructed and readily accessible; and

(*7*) is situated outdoors and is not located within the distances set forth in R3508-01(g)(4), except that R3508-01(g)(4)(B) and (g)(4)(C) shall not apply.

(C) All *CNG* use shall be under the *personal supervision* of a *certificate of fitness* holder.

(D) Pursuant to FC3508.3(14) and R3508-01(b)(2)(G), nonmetallic hose may be used for manhole operations where the task does not allow use of a stationary *CNG* appliance, necessitating a flexible connection between the appliance and the *CNG container*, provided that:

(*1*) The length of the hose does not exceed 30 feet;

(*2*) The hose is fabricated of materials that are designed for use with *CNG*; and

(*3*) The hose is color-coded red.

(5) Motor vehicles equipped with CNG containers

(A) *Motor vehicles* equipped with *CNG containers* for use on the *motor vehicle* shall not be left unattended on any street, highway, avenue or alley; in any congested area; within 50 feet of the property line of any multiple dwelling, building occupied for educational, health care or religious purposes, place of public assembly, or any other place of public gathering; or within 50 feet of any subway entrance, exit, vent or other opening.

(B) *CNG* storage and use on any vehicle for the purpose of marking traffic lanes shall be limited to a total capacity not exceeding 3,400 *SCF*.

(C) *CNG containers* in *motor vehicles* (other than for use as a motor fuel) shall be installed in compliance with the requirements of NFPA 58 applicable to such installations. The references to *LPG* in NFPA 58 shall be deemed to refer to *CNG*.

(D) Forklifts, tractors and similar *powered industrial trucks* equipped with *CNG containers* shall comply with the following requirements:

(*1*) *CNG* storage and use on such vehicles and devices shall be limited to one (1) *container* with a capacity not greater than 340 *SCF*.

(*2*) All such *powered industrial trucks* shall be stored and used in locations with adequate ventilation.

(*3*) Such *powered industrial trucks* shall be parked, and the *CNG containers* connected or disconnected, a safe distance, not less than 25 away, from open flames or other heat or ignition sources, open pits, underground entrances, elevator shafts, or other hazardous conditions.

(*4*) Every *powered industrial truck* shall be provided with a portable fire extinguisher with at least a 2-B:C rating.

(6) Mobile cooking uses. Mobile food units, as that term is defined in the New York City Health Code, 24 RCNY §89.01(c) (including but not limited to *motor vehicles*, pushcarts and stands), that are equipped with *CNG containers* for cooking purposes shall comply with the following requirements:

(A) *CNG* storage and use shall be limited to two (2) *CNG containers* on all types of mobile food units. *CNG containers* on mobile food units that are not *motor vehicles* shall have a *container* capacity of not more than 170 *SCF*.

(B) No *flammable liquid* or *combustible liquid* shall be used for cooking or any other purpose on any mobile food unit.

(C) *CNG containers* in mobile food units that are *motor vehicles* (other than for use as a motor fuel) shall be installed in compliance with the requirements of NFPA 58 applicable to such installations. The references to *LPG* in NFPA 58 shall be deemed to refer to *CNG*.

(D) No mobile food unit shall store or use *CNG* for cooking or any other purpose within:

(*1*) two (2) feet of any combustible material;

(*2*) two (2) feet of any building, except that no mobile food unit shall store or use *CNG* for cooking or any other purpose within:

(*a*) five (5) feet of any below-grade building opening, including any door, openable window or intake or exhaust vent;

(*b*) ten (10) feet of any building of wood frame construction;

(*c*) 20 feet of any building entrance; or

(*d*) ten (10) feet of any building occupied as a multiple dwelling, or any building occupied for educational, health

care or religious purposes, a place of public assembly, or other place of public gathering;

(*3*) five (5) feet of any *flammable gas* storage, including another mobile food unit equipped with *CNG containers*;

(*4*) five (5) feet of any subway vent or other opening, except a subway entrance or exit;

(*5*) ten (10) feet of any subway entrance or exit; and

(*6*) ten (10) feet of any vent or fill line of any *flammable liquid* storage tank.

(E) All mobile food units that are *motor vehicles* shall also comply with the restrictions applicable to vehicles equipped with *CNG containers* set forth in R3508-01(j)(5)(A).

(F) *CNG container* valves shall be closed when the mobile food unit or its cooking equipment is not in use.

(G) Each mobile food unit that is a *motor vehicle* shall be provided with a portable fire extinguisher with at least a 20-B:C rating. Each mobile food unit that is not a *motor vehicle* shall be provided with a portable fire extinguisher with at least a 2-B:C rating, which shall be mounted on the mobile food unit away from the heat source.

(7) Commercial establishments. Commercial establishments that store and use *CNG containers* for oil burner ignition and/or cooking shall comply with the following requirements:

(A) *CNG* storage, *handling* and use shall be limited to *CNG containers* with a capacity not greater than 8.7 *SCF* of gas, unless the *container* is connected for use in a stationary installation.

(B) All *CNG* appliances and equipment shall be installed by a *plumber*.

(C) Rigid piping shall be used for all connections between *CNG* devices, equipment and systems and *CNG* containers.

(D) Flexible metallic hoses and/or tubing may be used where flexibility is required for commercial oil burner ignition or cooking operations, provided that the hose or tubing is designed for use with *CNG*, and the length of the hose or tubing does not exceed six (6) feet.

(E) *CNG* storage and use for the purposes authorized by R3508-01(j)(7) is subject to the prohibition set forth in FC3508.3(11).

(8) Moored vessels. Residentially occupied vessels moored in marinas that store and use *CNG* for space heating and cooking purposes shall comply with the following requirements:

(A) *CNG* storage and use shall be limited to a total capacity not exceeding 1,700 *SCF*.

(B) All *CNG* devices, equipment and systems used on such a vessel shall serve only that vessel and no others.

(C) All *CNG* devices, equipment and systems shall be installed either by the vessel manufacturer or by a *plumber*.

(9) Torches used in the manufacture of jewelry. *CNG* may be stored and used for torches used in the manufacture of jewelry only in areas where access to *piped natural gas* from a public utility is not available, and where the manufacturing activity is a lawful use of the *premises*, as set forth on the Certificate of Occupancy for the *premises* or otherwise determined by the *Department of Buildings*. *CNG* storage and use for such torch operations shall comply with the following requirements:

(A) *CNG* storage and use shall be limited to a total capacity not exceeding 381 SCF of gas. The *Department* will not *permit CNG* storage or use in any one *fire area* in excess of this maximum capacity, irrespective of the number of manufacturing enterprises separately engaged in such torch operations within that one *fire area*.

(B) Storage and use of oxygen *containers* in connection with such torch operations shall be limited to a total capacity not exceeding 279 *SCF*. The *Department* will not permit oxygen storage or use in any one *fire area* in excess of this maximum capacity, irrespective of the number of manufacturing enterprises separately engaged in such torch operations within that one *fire area*.

(C) All *CNG* storage and use for torch operations shall be under the *personal supervision* of a *certificate of fitness* holder.

(D) All torches using *CNG* shall be *listed* and *labeled* by a nationally recognized testing laboratory.

(E) All torch operations shall be performed at a work station with a surface made of, or covered with, a noncombustible material. Each *CNG container* connected for use shall be secured in an upright position, away

from any heat source. The work station area shall be adequately ventilated.

(F) *CNG* or oxygen *containers* shall not be manifolded.

(G) Where fixed piping is used to pipe *CNG* or oxygen to the work station, such piping shall be made of either copper or steel, and shall be installed and tested in accordance with the provisions of R3508-01(i)(4) and (i)(6). Piping previously installed in the building for *natural gas* use shall not be used for *CNG* or oxygen for such torch operations. A *plumber* shall certify that the installation is in accordance with the requirements of this section.

(H) Pursuant to FC3508.3(14) and R3508-01(b)(2)(G), nonmetallic hose may be used for such torch operations where the task does not allow use of stationary *CNG* devices or equipment, necessitating a flexible connection between the device or equipment and the *CNG container*, provided that:

(*1*) The length of the hose does not exceed six (6) feet;

(*2*) The hose is fabricated of materials that are designed for use with *CNG*, if for *CNG* connections, and of materials that are designed for use with oxygen, if for oxygen connections; and

(*3*) The hose is color-coded red, if for *CNG* connections, and color-coded green, if for oxygen connections.

(I) Hoses that are worn or damaged, including those with burn marks, shall be replaced.

(J) Each person shall operate only one torch at a time and such torch shall not be left unattended while ignited.

(K) *Container* valves shall be closed when torches are not in use.

(L) *CNG* and oxygen *containers* not connected for use shall be stored in a designated storage area used only for that purpose. Such storage area shall be well-ventilated, away from heat sources, and at least three (3) feet from any combustible material. *CNG* and oxygen *containers* shall be stored separately, either at a distance of not less than 20 feet, or separated by a one-half (½) hour fire-rated wall not less than five (5) feet high.

(M) Smoking shall be prohibited on the *premises* and "No Smoking" signs shall be permanently affixed in conspicuous locations throughout the *premises*.

(N) A portable fire extinguisher with at least a 2-A:20-B:C rating shall be provided for every 2,500 square feet of area.

(10) Use of *CNG* for emergency oil burner ignition. Pursuant to FC3508.3(3), (6), (7) and (11), and R3508-01(b)(2)(A), (b)(2)(B), (b)(2)(C) and (b)(2)(E), *CNG* may be used for mobile emergency heating trailers for a period not to exceed 90 days, or when *piped natural gas* service is temporarily interrupted, provided that:

(A) *CNG* storage and use shall be limited to one (1) *container* with a capacity not exceeding 170 SCF.

(B) All *CNG* piping, tubing and hoses shall be installed by a *plumber*.

(C) Pursuant to FC3508.3(14) and R3508-01(b)(2)(G), nonmetallic hose may be used where the task does not allow use of a stationary *CNG* devices or equipment, necessitating a flexible connection between the device or equipment and the *CNG container*, provided that:

(*1*) The length of the hose does not exceed six (6) feet;

(*2*) The hose is fabricated of materials that are designed for use with *CNG*; and

(*3*) The hose is color-coded red.

§ 3509-01 Sanitary Landfill Methane Gas Recovery Facilities

(a) Scope. This section sets forth standards, requirements and procedures for the design, installation, operation and maintenance of methane recovery facilities that recover methane gas from sanitary landfills, process such gas to remove impurities, and/or compress, flare and odorize such gas.

(b) General Provisions

(1) Applicable provisions of law. Pursuant to FC3509.1, methane gas recovery facilities at sanitary landfills must be designed, installed, operated and maintained in compliance with the requirements of the Fire Code, this section, the *Construction Codes* and the *Electrical Code*.

(2) Design and installation documents. *Design and installation documents* for the *facility*, detailing the methane recovery process and *fire protection systems*, including a process flow diagram showing all vessels and instrumentation, shall be filed with the *Department of Buildings* and the *Bureau of Fire Prevention*, together with supporting information and documentation.

(3) Supervision. The *facility* shall be under the continuous *personal supervision* (on a 24 hour, seven-day-a-week basis), by at least one (1) person holding a *certificate*

of fitness for supervision of sanitary landfill methane recovery facilities, which qualifies the holder to perform or supervise gas compressing, fire alarm maintenance, and operation of a refrigerating system, at a sanitary landfill methane recovery facility.

(c) Design and Installation Requirements

(1) Pressure Vessels. Pressure vessels shall be designed to comply with the *ASME Boiler and Pressure Vessel Code*. Manufacturer ASME data sheets for pressure vessels shall be maintained on the *premises* and made available for inspection by any *Department* representative.

(2) Electrical equipment. Electrical equipment shall comply with the following requirements:

(A) Electrical equipment within 25 feet of any process equipment shall be explosion-proof, including the control center, electric service, overhead lights, air handling equipment, and the odorant room, if located within such area.

(B) Electrical instrumentation shall be designed to provide for fail-safe operation.

(3) Piping systems. Process systems shall comply with the following requirements:

(A) Design. Except as otherwise provided in this section, the design and installation of piping systems shall comply with ANSI Standard B31.3.

(B) Types of materials

(*1*) All materials, including gaskets and thread compounds, shall be suitable for the temperatures to which they may be exposed. A materials list shall be prepared and submitted to the *Department* for review and acceptance.

(*2*) Seamless steel pipe shall be used for process and transfer piping containing *flammable liquid* or *flammable gas*. Welded pipe may be used if seamless pipe is not available in the size required and if the weld and heat affected zone comply with ANSI Standard B31.3 (impact test) and are non-destructively examined in a manner acceptable to the *Department*. Notwithstanding the foregoing, plastic piping may be used for low pressure (15 *psig* or less) service for the wells and gathering lines used for collecting the raw gas from the landfill up to the feed gas inlet to the treatment and process plant.

(*3*) Threaded steel pipe shall be at least Schedule 80 but no threaded pipe over 2-inch nominal pipe size shall be used for *flammable liquid* or *flammable gas*, and all threaded joints used shall be sealed with tetrafluorethylene (Teflon) tape or equivalent. Larger size threaded plastic piping is allowed when used in low pressure service as specified in R3509-01(c)(3)(B)(*2*).

(*4*) All valves on piping containing *flammable gas* or *liquids* or *combustible liquids* shall be of steel construction

(*5*) Gaskets on piping containing *flammable gases* or *flammable liquids* shall be of the compressed noncombustible type.

(*6*) Piping insulation shall be of a noncombustible material.

(C) Pipe connections

(*1*) Butt-welded joints shall be used where practicable. Socket welds are permitted on *flammable gas* or *flammable liquid* lines for branch pipe connections of less than two (2) inches diameter.

(*2*) Expansion or contraction of piping shall be compensated for by use of appropriately designed piping loops or offsets. In addition, appropriately designed expansion joints may be used in piping carrying flammables or combustibles at pressures of 15 *psig* or less, and in piping carrying other materials at pressures of 100 *psig* or less.

(*3*) All flanges for *flammable gas* or *flammable liquid* lines shall be raised face. Flanges and other pipe fittings two (2) inches to eight (8) inches shall be butt welded to the piping, ten (10) inches to 24 inches shall be slip on and welded.

(*4*) Shut-off valves and other control valves shall be installed so that their operation will not be affected by icing or other weather conditions.

(D) Weld certifications

(1) Welds of steel process piping shall be made by certified welders, and evidence of their certifications shall be filed with the *Department*. Piping welders shall be certified to the *Department* by their employers after qualifying under the *ASME Boiler and Pressure Vessel Code*, or API Standard 1104-1999.

(2) Upon completion of the installation, the *owner* or operator of the facility shall submit to the Bulk Fuel Unit of the *Bureau of Fire Prevention* an affidavit executed by the manufacturer or installer of the piping system, attesting to the integrity of all welds, including welds pre-fabricated in a piping shop.

(4) Refrigerating systems. *Refrigerating systems*, if used, shall utilize a nonflammable refrigerant.

(5) Emergency shut down of process equipment

(A) The process equipment shall be provided with an emergency shut-down system capable of automatic and manual operation. The emergency shut-down system shall initiate upon the following activation:

(*1*) Manual activation of the system at the process control center.

(*2*) Activation of the fire detection system detectors located in the feed gas engine compressors area, or in other areas as determined by the *Department*.

(B) Activation of the emergency shut-down system shall initiate audible and visible alarms at the control center, an audible alarm outside the control center, and a visible alarm at the field alarm panel, followed by automatic shut down of process equipment within two (2) minutes, and depressurization of process piping to 100 *psig* or less with seven (7) minutes, and to 20 *psig* or less within twelve (12) minutes. Instrument air compressors are not required to shut down upon activation of the emergency shut-down system.

(C) One (1) or more emergency shut-down system abort switches may be provided in the control center and/or in the field alarm panel that, when activated within the first two (2) minutes of initiation of the emergency shut-down system, causes an override of the emergency shut-down system. Activation of such abort switch shall not interrupt any required transmission of alarms to central station. Manual activation of the emergency shut-down system shall override any abort switches.

(6) Alarm systems. Alarm systems shall be designed and installed in compliance with the following requirements:

(A) Methane gas detection system. A methane gas detection system that initiates audible and visible alarms in the control center at 25% LELshall be provided throughout the *facility*. Such system shall have an audible alarm outside the control center and a visible alarm on the field alarm panel. The methane gas detection system may be interconnected with the

emergency shut-down system when arranged to initiate such shut down if gas detection of 50% LEL is reached. Methane gas detectors shall be provided in the following locations:

(*1*) Feed gas compressor areas

(*2*) Feed gas intercool areas

(*3*) Vacuum compressor areas

(*4*) Vacuum module

(*5*) H.P. flash module

(*6*) Pretreatment module

(*7*) Solvent recovery system area

(*8*) Such other area as determined by the *Department*.

(B) Ultra-violet fire detection system. An ultra-violet fire detection system shall be provided to protect the gas compressor area. The system shall initiate an audible and visible alarm at the control center, and an audible alarm on the field alarm panel. Activation of the fire detection system shall initiate the facility emergency shut-down system and shall transmit a *fire alarm* to a *central station.*

(C) Manual fire alarm systems. At least one (1) *manual fire alarm box* shall be provided in the control center. At least one (1) additional *manual fire alarm box* shall be provided within the *facility* and near the *facility* entrance, which, if manually activated, shall transmit an alarm to a *central station*.

(D) Process alarms. Process alarms for abnormal operating conditions shall be provided.

(7) Yard hydrant system. The *facility* shall be provided with a yard hydrant system designed and installed in accordance with the requirements of FC508 and the *Building Code*. The yard hydrant system shall be designed and installed in compliance with the following requirements:

(A) Hydrants shall be a type complying with the requirements of the *Department of Environmental Protection* and have Fire Department *approved* threads;

(B) The hydrant system piping shall be a minimum eight (8) inches in diameter;

(C) Fire Department connections to the hydrant system piping shall be provided at one (1) or more *approved* locations;

(D) The system shall be supplied water from a source capable of providing a minimum of 2,500 *gpm;*

(E) A hydrant loop grid system shall be provided with block valves at one (1) or more *approved* locations for emergency and maintenance purposes;

(F) Hose reels and nozzles shall be provided at one (1) or more *approved* locations and shall be readily available for use; and

(G) Where required by the *Department*, fire water monitors shall be provided at one (1) or more *approved* locations.

(8) Fire extinguishing systems. If a *fire extinguishing system* other than a *sprinkler system* is installed in an interior motor control room, it shall be of an approved type, and shall comply with FC904 and the *Building Code*.

(9) Odorant room

(A) A *sprinkler system or other approved* non-water *fire extinguishing system* designed and installed in accordance with FC Chapter 9 and the *Building Code* shall be provided for protection of a gas odorant room.

(B) A fire detection system shall be provided in the odorant room. Activation of the fire detection system shall cause the gas valves to close gas valves and initiate audible and visible alarms locally and in the control center.

(C) A flammable gas detection system shall be provided in the odorant room. Activation of the flammable gas detection system shall initiate audible and visible alarms locally and in the control center.

(D) The odorant room shall be equipped with absorbing or neutralizing equipment to prevent escape of any odorant to the atmosphere.

(10) Lightning Protection and Grounding

(A) The highest structural steel, process vessels and columns shall be provided with lightning protection in accordance with the *Electrical Code*.

(B) All process equipment and piping shall be electrically grounded.

(11) Flammable and combustible liquids. *Flammable* and *combustible liquids*, in the gas recovery and treatment system, and in *stationary tanks*, shall be stored, *handled* and used in compliance with the requirements of FC Chapter 34 and the *rules*. Solvents with low *flash points* and solvents used at a temperature above their *flash points* may be used only when *approved.*

(12) Compressor enclosures. *Natural gas* compressors shall be located outdoors, except that such compressors may be partially enclosed in light-weight noncombustible construction for protection against the weather, provided such enclosure is open at the top and bottom in an approved manner that provides for adequate ventilation and explosion venting.

(13) Flaring systems. The design and installation of any flaring system shall be *approved*.

(14) Markings. Process, fire protection and other critical piping shall be identified in accordance with FC Chapters 9 and 27.

(15) Security. A fence constructed of noncombustible material shall be provided around the perimeter of the *facility*, at least 25 feet away from any process equipment.

(16) Fire apparatus. At least two (2) means of fire apparatus access shall be provided to the methane gas recovery facility.

(17) Space heating systems. Only hot water space heating systems may be installed within the facility. The location of any space heating plant shall be *approved.*

(d) Operational and Maintenance Requirements

(1) Reporting of alarms. Initiation of the emergency shut-down system, whether manually or automatically activated, shall be followed by a telephone call from the control center to the *Department*.

(2) Operator response to alarms

(A) Upon activation of the emergency shut-down system, the lube oil pumps for the feed-gas engine compressors and *refrigerating system* compressors shall also be manually shut down as necessary to ensure the safe operation of the facility.

(B) The emergency shut-down system abort switch authorized by R3509-1(c)(5)(C) may be activated only after the operator has investigated the cause of the alarm condition and determined that shut down of the system is unwarranted due to an *unwarranted alarm* or other good cause, and consistent with safe operation of the *facility.*

(3) Piping systems

(A) Installation testing. All process piping, except plastic piping used for wells and gathering lines, shall be hydrostatically pressure tested at the *owner*'s risk by his or her representative before a representative of the *Department* for one (1) hour at twice the maximum operating pressure or 100 *psig*, whichever is greater, with no loss of pressure. Plastic piping used for wells and gathering lines shall be tested at 50 *psig*. In lieu of the testing of plastic piping for wells and gathering lines, an oxygen analyzer installed at the inlet side of the compressor to detect air leakage into the system may be accepted, providing such analyzer or detector will shut the plant down before any air mixture that can cause an explosion reaches the compressor. The oxygen analyzer may be installed at the discharge side of the first compressor stage, if evidence is submitted, satisfactory to the *Commissioner* that no "dieseling or compression" explosion can take place in the compressor due to air mixture, and that the oxygen analyzer can shut the plant down before detected "air" can reach any other portion of the plant where explosion in a *flammable gas*-air mixture is possible.

(B) Installation system start-up testing. Prior to any initial startup of the process equipment, systems and sub-systems having piping previously tested pursuant to R3509-01(d)(3)(A) whose integrity has been breached by interconnected piping or equipment shall be hydrostatically retested at the *owner*'s risk by his or her representative before a representative of the *Department*. The test pressure for each such system shall be the maximum anticipated operating pressure (above normal operating pressure), but in no case shall such pressure exceed the relief valve set pressures, machinery seals maximum design pressure, and the maximum design pressure for process equipment. Systems shall be tested prior to any plant start-up operation.

(C) Piping system test modifications. When it is demonstrated to the satisfaction of the *Department* that a hydrostatic test is not feasible for piping and process equipment, the following alternative tests may be performed:

(1) A pneumatic pressure test of piping utilizing a soap test on all joints.

(2) An *approved* strength test of process equipment when the equipment will not sustain a pressure test.

(D) Pressure recording charts. All piping pressure tests required by this section shall be conducted using a pressure recording chart showing exact locations and the extent of such test performed. The *owner* or operator of

the *facility* shall submit the results from such pressure recording chart to the *Department*.

(E) Weld testing. All welded joints on *flammable gas* or *flammable liquid* piping shall be 100% radiograph tested by an independent person or firm. Certifications on acceptance or rejection of each weld shall be filed with the *Department* by the *facility owner* or operator.

(4) Periodic testing of fire protection systems. Periodic testing of the fire detection, fire extinguishing, gas detection, alarm and emergency shut-down system shall be performed by the *certificate of fitness* holder. Such testing shall be performed at least annually at the *owner*'s risk by his or her representative before a representative of the *Department*. Records of testing shall be maintained on the *premises*.

(5) Yard hydrant systems. The yard hydrant system shall be hydrostatically tested at the *owner*'s risk by his or her representative before a representative of the *Department* at 300 *psig* for one (1) hour.

(6) Required signage. Instructions on the operation of the *facility fire protection systems* and a concise process flow diagram shall be conspicuously posted at an *approved* location.

(7) Hot work operations. *Hot work* operations within the *facility* shall comply with the requirements of FC Chapter 26. Such operations shall additionally be conducted under the *personal supervision* of the *certificate of fitness* holder for the *facility*.

(8) Vegetation. A clearance distance of 25 feet shall be maintained from any process equipment to vegetation, and within 25 feet on either side of the fence required by FC3509-01(c)(15).

(9) Smoking. It shall be unlawful to smoke within the *facility*. No smoking signs shall be conspicuously posted throughout the *facility* in accordance with FC310.

(10) Periodic filing of reports. The *owner* or operator of the *facility* shall submit monthly reports of problems, unusual occurrences and incidents relating to the operation of the *facility*. Such reporting shall continue for one (1) year after issuance of the original permit authorizing operation of the *facility*.

(f) Portable Fire Extinguisher Requirements. The *facility* shall be provided with portable fire extinguishers having at least a 40-B:C rating. The maximum travel distance to such extinguishers shall not exceed 30 feet.

§ 3510 Reserved

CHAPTER 36
FLAMMABLE SOLIDS

§3601-3605 Reserved

§ 3601-3605 Reserved

CHAPTER 37
HIGHLY TOXIC AND TOXIC MATERIALS

§3701-3705 Reserved

§ 3701-3705 Reserved

CHAPTER 38
LIQUEFIED PETROLEUM GASES

§3801-3808 Reserved
§3809-01 Liquefied Petroleum Gases

§ 3801-3808 Reserved

§ 3809-01 Liquefied Petroleum Gases

(a) Scope. This section sets forth standards, requirements and procedures applicable to the storage, *handling* and use of *LPG*. This section shall not apply to the following operations:

(1) The outdoor storage, *handling* and use of *LPG* for private, non-commercial barbecues within the lot line of a Group R-3 occupancy, the requirements for which are subject to the provisions of FC307.5.

(2) The storage, *handling* and use of *LPG* in connection with *special effects*, the requirements for which are set forth in FC3309 and the *rules*.

(3) The transportation of *LPG*, the requirements for which are set forth in FC2707.

(b) General Provisions

(1) General LPG requirements. The provisions of this section shall be applicable to all *LPG* materials, operations and/or *facilities* as follows:

(A) All *LPG* storage, *handling* and use governed by this section shall comply with the *design and installation document*, *permit*, supervision, and general storage, *handling* and use, requirements set forth in R3809-01(c), (d), (e) and (f).

(B) Outdoor and indoor *LPG* storage shall be in facilities that comply with the requirements for such facilities set forth in R3809-01(g) and (h).

(C) Stationary *LPG* installations shall comply with the requirements for such installations set forth in R3809-01(i).

(D) *LPG* storage, *handling* and use for the special applications set forth in R3809-01(j) (on *construction sites*, for emergency indoor repairs, for manhole operations, on *motor vehicles*, for mobile cooking uses, in commercial establishments, on moored vessels, at street fairs, bazaars, carnivals, concerts, festivals and similar outdoor public gatherings, for hot air balloon operations, and in *Group A occupancies* and similar public gathering places) shall additionally comply with the applicable requirements of R3809-01(j).

(2) Special LPG authorizations. This section authorizes the following storage, *handling* and/or use of *LPG* that is prohibited by FC3805.3 except as authorized by the *Commissioner*:

(A) storage, *handling* and use of *LPG* below grade for emergency indoor repairs, as set forth in R3809-01(j);

(B) storage, *handling* and use in, and bringing or allowing into, residential occupancies or on lots containing a building used for a residential occupancy, of *LPG containers* with a capacity greater than sixteen and four tenths ounces (16.4 oz.), as set forth in R3809-01(j) and (k);

(C) storage, *handling* and use in, and bringing or allowing into, any non-residential building, of *LPG containers* with a capacity greater than sixteen and four tenths ounces (16.4 oz.), as set forth in R3809-01(h), (j), and (k);

(D) *handling* and use on the roof of any building of *LPG containers* with a capacity greater than sixteen and four tenths ounces (16.4 oz.), as set forth in R3809-01(j) and (k);

(E) storage, *handling* or use of *LPG* for stationary *LPG* installations in any area where access to *piped natural gas* from a public utility is available, as set forth in R3809-01(k);

(F) storage, *handling* and use of *LPG* for space heating or water heating, as set forth in R3809-01(j) and (k);

(G) withdrawing of *LPG* in liquid form from an *LPG container* for hot air balloon operations, as set forth in R3809-01(j); and

(H) use of nonmetallic pipe, tubing and components for devices, equipment and systems utilizing *LPG*, as set forth in R3809-01(j).

(c) Design and Installation Documents

(1) When required. All indoor and outdoor *LPG* storage shall be in storage facilities approved by the *Department*. All *LPG* storage, *handling* and use for stationary *LPG* installations shall be for installations *approved* by the *Department*. *Design and installation document*s for such storage facilities and stationary installations shall be submitted to the *Department* for review and *Department* approval obtained prior to any *LPG* storage or use.

(2) Applications. *Applications* for *design and installation document* approval shall be made by or on behalf of the person who will be storing, *handling* or using the *LPG*, and submitted to the *Bureau of Fire Prevention* at Fire Department Headquarters prior to any *LPG* storage, *handling* or use. *Applications* for *LPG* installations other than on *construction sites* shall include a copy of the altered building *application* or other documentation filed with and approved by the *Department of Buildings* or other agency having jurisdiction over the installation.

(3) Upon completion of any stationary *LPG* installation, an affidavit executed by the installer or *plumber* responsible for the installation shall be submitted to the *Bureau of Fire Prevention* at Fire Department Headquarters certifying that the installation conforms to the requirements of this section and FC Chapter 38.

(d) Permits

(1) Number of containers requiring a permit. Pursuant to FC 105.6, an *LPG permit* shall be obtained for the storage, *handling* or use of more than 400 *SCF* of *LPG*. Table 1 (R3809-01) sets forth the number of *LPG containers, by container* capacity, requiring a permit pursuant to such section.

Table 1 (R3809-01)

***LPG* Container Capacity**	**Number of Containers Requiring Permit**
14.1 oz.	54
16.4 oz	46

20 lbs.	3
33½ lbs	2
40 lbs.	2
100 lbs.	1

(2) Applications. *Applications* for issuance of an *LPG permit* shall be made by or on behalf of the person who will be storing, *handling* or using the *LPG*, except as otherwise provided in R3809-01(d)(3). *Applications* shall be submitted to the *Bureau of Fire Prevention* at Fire Department Headquarters prior to any *LPG* storage, *handling* or use.

(3) Street fairs. An *LPG permit* shall be obtained from the *Department* for the storage, *handling* or use of *LPG* in conjunction with any street fair, bazaar, carnival, concert, festival or similar outdoor public gathering, as set forth in FC105.6 and R403-01. *Application* for such *LPG permit* shall be made by the sponsor or promoter of the event.

(4) Availability of piped natural gas. An *LPG permit* will not be issued by the *Department* for a stationary *LPG* installation located in an area where access to *piped natural gas* is available, except as provided in R3809-01(k). Any *LPG* storage and use pursuant to a *permit* issued after March 1, 2000 for a stationary *LPG* installation located in an area where access to *piped natural gas* is not available shall be discontinued and all *LPG containers* removed from the *premises* within five years of the date such access becomes available, and no such *permit* shall be renewed beyond such five-year period.

(e) Supervision

(1) The storage, *handling* and use of *LPG* shall be supervised as set forth in FC3801.5 and this section.

(2) The connecting and disconnecting of *LPG containers* with a capacity equal to or greater than sixteen and four tenths ounces (16.4 oz.) shall be performed by a *certificate of fitness* holder. When such connecting and disconnecting is performed by a *LPG* supplier or distributor a card or tag shall be conspicuously posted at the *premises* identifying the name and address of the supplier or distributor, the name of the *certificate of fitness* holder, and the number and expiration date of the *certificate of fitness*.

(f) General Storage, Handling and Use Requirements

(1) Except as otherwise provided in this section, *LPG* shall be stored, handled and used in compliance with the requirements of NFPA 58.

(2) All appliances, equipment and components used for the storage or use of *LPG* shall be *approved* or *listed* by a nationally recognized testing laboratory.

(3) All equipment and appliances used for the storage or use of *LPG* shall be maintained and operated in accordance with the manufacturer's specifications.

(4) Only metallic pipe, tubing and components shall be used for *LPG* installations, appliances and equipment, except as provided in R3809-01(j)(2)(E), (j)(3)(B), (j)(4)(D), (j)(9)(D) and (j)(10)(K). Where use of nonmetallic hoses is allowed by this section, such hoses shall be protected from twisting, abrasion and damage by proper installation and maintenance.

(5) For installations approved on or after March 1, 2000 under the 1968 Building Code, storage and use of *LPG* in quantities exceeding 2,500 standard cubic feet of gas (approximately 300 pounds) constitutes a high hazard occupancy as set forth in Article 3 of Subchapter 3 of the 1968 Building Code. Any such quantities of *LPG* shall be stored and used in compliance with the 1968 Building Code requirements applicable to high hazard occupancies.

(6) *LPG containers* shall be stored in an upright position and secured to prevent movement.

(7) *LPG containers* shall not be stacked or stored on shelves.

(8) All connection and disconnection of *LPG containers* for use shall be performed outdoors, except as otherwise authorized by this section. Where *LPG* use is allowed indoors, all connection and disconnection of *LPG containers* shall be performed in a well-ventilated area.

(9) *LPG containers* connected for use shall be adequately supported and braced in an upright position, except when used to power forklifts or other material handling equipment, when they shall be installed in accordance with the manufacturer's specifications.

(10) *LPG containers* connected for use shall be placed on a firm and noncombustible foundation.

(11) *LPG* appliances, equipment and components shall be maintained at all times in a gas-tight condition. Any appliance, equipment or component which is not in a gas-tight condition shall be removed from use and promptly repaired or lawfully disposed of.

(12) Each time a connection is made to a *LPG container*, or a leak is suspected, the connection shall be tested by the *application* of a soap solution or its equivalent to joints, valves and fittings. Open flames shall not be used to test connections or leaks.

(13) *LPG containers* shall be protected at all times from the effects of weather and physical damage.

(14) *LPG* shall be stored and used only if all safety devices on the appliances and equipment are in good working order. Such devices shall not be disconnected or defeated. Any appliance or equipment with a safety device that is not in good working order shall be removed from use and promptly repaired, or disposed of in a lawful manner.

(15) Any empty *LPG container* that at any time previously has been filled with *LPG* shall be treated as though it contains *LPG*, and shall be stored and used in the same manner as a full *LPG container*, including storage in a storage facility in accordance with this section. Damaged or otherwise unusable *LPG containers* shall be promptly removed from the *premises* and disposed of in a lawful manner.

(16) Warning signs complying with *OSHA* requirements, as set forth in §1910.145(D) of Part 1910 of Title 29 of the Code of Federal Regulations, shall be conspicuously posted at each *LPG* installation, storage location or use site. Such signs *shall* be at least ten (10) inches by fourteen (14) inches in size and shall bear the wording "DANGER-FLAMMABLE GAS-KEEP FIRE OR FLAME AWAY-NO SMOKING" in lettering at least two (2) inches high. The word "Danger" shall be in white on a red oval bordered in white which shall be on a black background at the upper part of the sign. The other required wording shall be in black on a white background in the lower part of the sign.

(17) *LPG containers* shall not be moved unless the *container's* valves are closed, except when the *container* is mounted on a *motor vehicle* to store *LPG* for use as a fuel for motive power.

(18) *LPG containers* shall not be rolled or dragged on their side or rims. *LPG containers* shall only be moved by lifting and lowering, by hand or with equipment designed for such purposes.

(19) *LPG containers* shall not be dropped or thrown from any height.

(20) *LPG containers* with a capacity of 20 pounds shall be provided with transportation plugs that secure gas-tight the *container's* outlet valve connection.

(g) Outdoor Storage Facilities

(1) Except as otherwise provided herein, all *LPG containers* shall be stored outdoors in a storage facility that conforms to the requirements of R3809-01(g). In addition to compliance with the requirements of FC 2703.12 and 3809.12, and FC Table 3809.12, all outdoor *LPG* storage facilities shall be:

(A) not more than 54 square feet in area;

(B) protected from vehicle impact;

(C) protected from theft, tampering or unauthorized use by a metal open fence enclosure at least six (6) feet in height, secured by a locked gate opening outward, or by a lockable ventilated metal locker of a type for which a *certificate of approval* has been issued. Such fence enclosure or locker shall be mounted on and secured to a substantial concrete pad at grade level, which pad shall be constructed to prevent accumulation of rain and snow;

(D) located in a well ventilated area. There shall be a minimum clearance of ten (10) feet from any surrounding walls more than eight (8) feet high on at least three sides of the outdoor storage facility;

(E) directly accessible from the street. *LPG containers* being delivered to or taken from an outdoor storage location shall not be brought into or through any building or other structure; and

(F) provided with a portable fire extinguisher with at least a 10-B:C rating. Such portable fire extinguisher shall be located in a protective enclosure affixed to the outside of the storage facility or placed at another readily accessible location not more than 30 feet from the storage facility.

(2) No more than 2,500 *SCF* of *LPG* (approximately 300 pounds) shall be stored in a *pre-existing* outdoor *LPG* storage facility unless such facility complies with the current Fire Code and *rule* requirements.

(3) No outdoor storage facility shall be located on a lot containing any building used for residential purposes.

(4) No outdoor storage facility shall be located within:

(A) ten (10) feet of the nearest lot line, sidewalk or building on an adjoining lot, except as follows:

(*1*) 50 feet of any building occupied as a multiple dwelling; and

(*2*) 100 feet of the lot line of any property occupied for educational, health care or religious purposes;

(B) ten (10) feet of any authorized parking for *motor vehicles*;

(C) ten (10) feet of any combustible material;

(D) 15 feet of any vent or fill line of any *flammable liquid* or *combustible liquid* storage tank; and

(E) 20 feet of any aboveground *flammable liquid* or *combustible liquid* storage tank.

(h) Indoor LPG Storage

(1) Except as provided in R3809-01(k), indoor storage of any *LPG container* with a capacity greater than sixteen and four tenths ounces (16.4 oz.) is prohibited in any residential occupancy and in any building where an outdoor location for such *LPG container* is available.

(2) All indoor storage of *LPG containers* with an individual capacity greater than sixteen and four tenths ounces (16.4 oz.) authorized by this section shall be stored in a separate room that conforms to the requirements of R3809-01(h). Any such room shall be:

(A) constructed in compliance with the *Construction Codes*, including the *Building Code*;

(B) constructed of walls, floors and ceilings having at least a two (2) hour fire resistance rating;

(C) constructed with an access door that opens directly to the outdoors;

(D) used for no other purpose; and

(E) provided with a portable fire extinguisher with at least a 10-B:C rating. Such portable fire extinguisher shall be affixed to the outside of the storage room or placed at another readily accessible location not more than 30 feet from the room entrance.

(3) No such room shall:

(A) be located at the property line adjoining a multiple dwelling, building occupied for educational, health care or religious purposes, place of public assembly, or other place of public gathering; and

(B) have ventilation openings located within five (5) feet of any building opening, including any doors, openable windows and intake and exhaust vents.

(4) All delivery and pick-up of *containers* to or from an indoor *LPG* storage facility shall be through the outdoors access door only, not through the building.

(i) Stationary LPG Installations. In addition to complying with the requirements of FC 2703.12 and 3809.12, and FC Table 3809.12, stationary *LPG* installations shall comply with the following requirements:

(1) All *LPG containers* connected for use in a stationary installation shall be stored outdoors.

(2) A single, accessible, safely-located, and conspicuously-marked shutoff valve shall be provided wherever *LPG* piping enters a building or structure.

(3) A single, accessible, safely-located and conspicuously-marked shutoff valve shall be provided for each appliance connected to a *LPG container*.

(4) All new and repaired *LPG* piping shall be tested at one and one half (1½) times normal working pressure but not less than three (3) *psig*, using air or inert gas. There shall be no drop in the shut-in pressure for a period of 30 minutes.

(5) When *LPG* is piped indoors, a sign at least ten (10) inches high and fourteen (14) inches wide shall be conspicuously posted at the entrance to the building and shall bear the wording "Danger-LPG Piping".

(6) Metal pipe straps, hangers, or band shall be suitable for the size of pipe and of such strength and quality that the piping cannot be accidentally dislodged. Spacing of hangers shall not exceed six (6) feet for one half (½) inch pipe, eight (8) feet for three quarter (¾) and one (1) inch pipe, and ten (10) feet for one and one quarter (1¼) inch or larger pipe.

(7) No *LPG container* connected for use shall be located within:

(A) 50 feet of any building occupied as a multiple dwelling;

(B) 100 feet of the lot line of any property occupied for educational, health care or religious purposes;

(C) ten (10) feet of any combustible material; or

(D) 20 feet of any aboveground *flammable liquid* or *combustible liquid* storage tank.

(8) A portable fire extinguisher with at least a 10-B:C rating shall be provided whenever *LPG* is connected for use. The maximum travel distance to the portable fire extinguisher shall be 30 feet from the work location.

(j) Special Storage and Use Requirements

(1) All storage or use of *LPG* for the *applications* set forth in R3809-01(j) shall be in compliance with the respective requirements of R3809-01(j), in addition to the requirements set forth in R3809-01(c), (d), (e), (f) and (i).

(2) Construction sites

(A) A site-specific *permit* shall be obtained for *LPG* storage, *handling* and use on a *construction site*, except that a city-wide *LPG permit* may be obtained for tar kettle and torch operations where no reserve storage is needed and *LPG containers* are removed from the site at the end of each workday, and the construction work requiring *LPG* use is to be completed within thirty (30) days of commencement.

(B) Except as provided in R3809-01(j)(2)(D), all *LPG* for use on *construction site*s shall be stored in outdoor storage facilities that comply with the requirements of R3809-01(g)(1)(B), (C) and (D). No *construction site* shall store more than 5,000 pounds of *LPG*. No *construction site* storage facility shall:

(*1*) have a capacity exceeding 2,500 pounds of *LPG* in any single storage facility;

(*2*) be within 50 feet of any other *LPG* storage facility;

(*3*) be within 25 feet of the building under construction;

(*4*) be within 50 feet of any aboveground *flammable liquid* or *combustible liquid* storage tank;

(*5*) be within 50 feet of any combustible material;

(*6*) be within 50 feet of any building occupied as a multiple dwelling;

(*7*) be within 100 feet of any subway entrance, exit, vent or other opening; and

(*8*) be within 100 feet of the lot line of any property occupied for educational, health care or religious purposes, place of public assembly, or other place of public gathering.

(C) Each *construction site* storage facility shall be provided with a wheeled type portable fire extinguisher with at least a 40-B:C rating. Such portable fire extinguisher shall be kept outside of the storage facility or placed at another readily accessible location not more than 30 feet from the storage facility.

(D) *LPG containers* may be stored inside an unoccupied building under construction where no allowable outdoor location is available, provided that such *containers* are stored on the ground floor at a location acceptable to the *Department* that is as far as possible but in no event less than ten

(10) feet from any flue, stairwell, or elevator shaft, and the amount of *LPG* so stored is acceptable to the *Department* but in no event exceeds a total of 1,250 pounds. *LPG containers* may be stored at one (1) additional location on the ground floor of the same building if a minimum separation distance of 70 feet between storage locations can be provided and maintained. The amount of *LPG* stored at such additional location shall not exceed 1,250 pounds.

(E) Pursuant to FC3805.3(14) and R3809-01(b)(2)(H), nonmetallic hose may be used at a *construction site* where:

(*1*) The construction activity does not allow use of a stationary *LPG* appliance, necessitating a flexible connection between the appliance and the *LPG container*;

(*2*) The length of the hose does not exceed 30 feet; and

(*3*) The hose is designed for a working pressure of not less than 250 *psi* when the construction activity is being performed outdoors, or 350 *psi* when it is being performed indoors.

(F) Tar kettle and torch operations

(*1*) *LPG* heaters for tar kettles shall be operated under the *personal supervision* of a *certificate of fitness* holder.

(*2*) All torch operations shall be performed by a *certificate of fitness* holder.

(*3*) It shall be unlawful for any person to operate, maintain or use a kindled tar kettle or torch in or on the roof of any building, except that torches may be used for emergency indoor repairs in accordance with R3809-01(j)(3) and may be used on the roof of any building having a roof of noncombustible construction.

(*4*) *Fire guards* holding a *certificate of fitness* shall be on continuous duty during any torch operations on the roof of a building. There shall be one (1) *fire guard* on the roof for each torch operator, and there shall be at least one (1) *fire guard* on the floor or level below the torch operation. Such *fire guards* shall not be assigned any duties other than to remain alert and guard against *fire* and shall be alert to sparks, the transmission of heat, and the potential ignition of combustible material. Such *fire guards* shall be responsible for ensuring that fire extinguishing equipment is readily accessible from the time torch operations are commenced until an hour after such operations are completed.

(*5*) A *fire guard* holding a *certificate of fitness* shall inspect all areas exposed to the effects of torch operations after the completion of torch operations for the purpose of detecting *fires*. The first inspection shall be conducted one-half (½) hour after completion of torch operations; the second inspection one (1) hour after completion of torch operations. The *fire guard* shall prepare and sign an inspection report confirming the safe condition of the *premises*. Such report shall be submitted to and retained by the person in charge of the torch operations.

(*6*) A portable fire extinguisher with at least a 2-A:20-B:C rating shall be provided for each torch.

(*7*) All movement of *LPG containers* within a building shall be performed in the following manner:

(*a*) Transportation plugs shall be installed on the *LPG containers* to secure gas-tight the outlet valve connection.

(*b*) *LPG containers* at all times shall be moved under the *personal supervision* of a *certificate of fitness* holder. At no time shall the *containers* be left unattended.

(*c*) *LPG containers* with a capacity of more than 20 pounds shall be moved to another floor of the building only by freight elevator, construction elevator, or passenger elevator when approved, and such elevator shall be occupied only by those persons engaged in moving the *containers*. *LPG containers* with a capacity of 20 pounds or less shall be moved in the same manner, except that they may be moved in building stairwells if such stairwells are unoccupied.

(G) Asphalt melters

(*1*) *LPG*-fueled asphalt melters shall be stored, handled, used and maintained in the same manner as *LPG*-fueled tar kettles, including compliance with the provisions of FC303 and R3809-01(j)(2)(F), except as otherwise provided in R3809-01(j)(2)(G)(5) with respect to use of an *LPG*-fueled asphalt melter on a roof.

(*2*) *LPG*-fueled asphalt melters shall be designed to utilize indirect heating and an enclosed flame, and shall be provided with a thermostatic control and an automatic shut-off to limit the temperatures to which the asphalt may be heated. Such melters

shall be operated so as to limit the heating of the asphalt to a temperature not exceeding 425ºF, or 50ºF below the *flash point* of the asphalt, whichever is lower.

(*3*) Asphalt melter covers shall be automatic-closing by *approved* devices designed to operate in the event of *fire*.

(*4*) Only one (1) *LPG container* with a maximum capacity of 100 pounds of *LPG* may be connected to an *LPG*-fueled asphalt melter.

(*5*) *LPG*-fueled asphalt melters may be used on the roof of any building having a roof of noncombustible construction, provided that they are designed and operated in compliance with the following requirements:

(*a*) LPG-fueled asphalt melters used on roofs shall have a design capacity of not more than 200 gallons of asphalt, or such lesser amount as may be safely supported by the roof structure.

(*b*) Not more than two (2) such asphalt melters may be brought onto or operated on a roof at a time.

(*c*) The *certificate of fitness* holder responsible for the *personal supervision* of such asphalt melters shall be provided with a cellular phone or other means of communication for immediate notification to the *Department* of a *fire* or other emergency.

(*d*) Only *LPG containers* connected for use shall be kept on the roof.

(H) Curing and drying applications

(*1*) The use of *LPG* for curing concrete, drying plaster and similar *applications* shall be prohibited in any occupied building, any location within 50 feet of an occupied building, and any location within 100 feet of the lot line of any property occupied for educational, health care or religious purposes, a place of public assembly, or other place of public gathering.

(*2*) The use of *LPG* for curing concrete, drying plaster and similar *applications* shall be under the *personal supervision* of a *certificate of fitness* holder. The *certificate of fitness* holder shall inspect the area where *LPG containers* and heaters are in use on not less than an hourly basis. The results of each inspection shall be recorded in

a log book which shall be maintained on the *premises* and made available for inspection by any *Department* representative.

(*3*) Heaters used for curing concrete, drying plaster and similar applications shall be placed at least six (6) feet from any *LPG container* or combustible material, and ten (10) feet from any tarpaulin cover. Such heaters shall only be used in a well-ventilated area and shall not be placed on unprotected wood flooring.

(*4*) Pursuant to FC3805.3(14) and R3809-01(b)(2)(H), nonmetallic hose may be used at a *construction site* where flexibility is required for such operation, provided that:

(*a*) The length of the hose is as short as practical, but in no circumstance exceeds 30 feet; and

(*b*) The hose shall be fabricated of materials that are resistant to the action of *LPG* both as liquid and vapor and designed for a working pressure of 350 *psi*.

(*5*) *LPG*/heater assemblies shall be provided with a portable fire extinguisher with at least a 20-B:C rating located not more than 30 feet away. A travel distance of up to 50 feet may be allowed if a portable fire extinguisher with at least a 40-B:C rating is provided.

(3) Emergency indoor repairs

(A) Pursuant to FC3805.3(5) and (6), and R3809-01(b)(2)(B) and (C), *LPG* equipment and *containers* may be used indoors, except in an occupied place of public assembly, for the purpose of performing emergency repairs. Such *LPG* use shall be subject to the following requirements:

(*1*) *LPG* use at the work site shall be limited to two (2) *LPG containers*, each with a capacity not greater than 20 pounds;

(*2*) *LPG containers* with a capacity greater than sixteen and four tenths ounces (16.4 oz.) shall not be left unattended;

(*3*) All *LPG* use shall be under the *personal supervision* of a *certificate of fitness* holder; and

(*4*) All *LPG containers* shall be removed from inside the building at the end of the work day.

(B) Pursuant to FC3805.3(14) and R3809-01(b)(2)(H), nonmetallic hose may be used for emergency indoor repairs where the nature of the repair work requires a flexible connection between the appliance and the *LPG container* provided that;

(*1*) The length of the hose does not exceed six (6) feet; and

(*2*) The hose is designed for a working pressure of not less than 350 *psi*.

(C) Pursuant to FC3805.3(2) and R3809-01(b)(2)(A), a single *LPG container* with a capacity not greater than 16.4 ounces may be used below grade for emergency indoor repairs, provided that the *container* is not left unattended.

(4) Manhole operations

(A) *LPG containers* and heaters shall not be brought into manholes or located within six (6) feet of manholes.

(B) *LPG* storage, *handling* and use at each manhole work site shall be limited to two *LPG containers*, each with a capacity not greater than 33½ pounds. Such *LPG containers* shall be removed from the work site at the end of each work day unless they are stored in a tool cart that:

(*1*) is constructed of steel;

(*2*) has a door at least one-quarter (¼) inch thick that is locked at all times;

(*3*) has not less than 100 square inches of fixed ventilation at the bottom with a suitable screen as a flash arrestor;

(*4*) has six-inch placards bearing United States Department of Transportation designation "1075" permanently affixed to two opposite exterior walls of the tool cart;

(*5*) has "No Smoking" signs permanently affixed to the tool cart in a conspicuous location;

(*6*) has the *LPG containers* positioned within the cart such that *container* shut-off valves are unobstructed and readily accessible; and

(*7*) is situated outdoors and is not located within the distances set forth in R3809-01(g)(4), except that R3809-01(g)(4)(B) and (g)(4)(C) shall not apply.

(C) All *LPG* use shall be under the *personal supervision* of a *certificate of fitness* holder.

(D) Pursuant to FC3805.3(14) and R3809-01(b)(2)(H), nonmetallic hose may be used for manhole operations where the task does not allow use of a stationary *LPG* appliance, necessitating a flexible connection between the appliance and the *LPG container*, provided that;

(*1*) The length of the hose does not exceed 30 feet; and

(*2*) The hose is designed for a working pressure of not less than 250 *psi*.

(5) Motor vehicles equipped with *LPG containers*

(A) *Motor vehicles* equipped with *LPG containers* for use on the *motor vehicle* shall not be left unattended on any street, highway, avenue or alley; in any congested area; within 50 feet of the property line of any multiple dwelling, building occupied for educational, health care or religious purposes, place of public assembly, or any other place of public gathering; or within 50 feet of any subway entrance, exit, vent or other opening.

(B) *LPG* storage and use on any vehicle for the purpose of marking traffic lanes shall be limited to four (4) *LPG containers*.

(C) Forklifts, tractors and similar *powered industrial trucks* equipped with *LPG containers* shall comply with the following requirements:

(*1*) *LPG* storage and use on such *powered industrial trucks* shall be limited to one (1) *LPG container* with a capacity not greater than 40 pounds.

(*2*) Whenever *LPG containers* are installed in a horizontal position, the *container* shall be of such a design that the pressure relief valve will discharge vapor.

(*3*) All such *powered industrial trucks* shall be stored and used in locations with adequate ventilation.

(*4*) Storage and use of such *powered industrial trucks* below grade, including in a basement or cellar, is prohibited.

(*5*) Such *powered industrial trucks* shall not be parked, or the *LPG containers* replaced, near open flames or other heat or ignition

sources, or near open pits, underground entrances, elevator shafts, or similar areas.

(*6*) Every *powered industrial truck* shall be provided with a portable fire extinguisher with at least a 2-B:C rating.

(6) Mobile cooking uses. Mobile food units, as that term is defined in §89.01(c) of the New York City Health Code (including but not limited to *motor vehicles*, pushcarts and stands) that are equipped with *LPG containers* for cooking purposes shall comply with the following requirements:

(A) *LPG* storage and use shall be limited to two (2) *LPG containers* on all types of mobile food units. *LPG containers* on mobile food units that are not *motor vehicles* shall have a *container* capacity of not more than 20 pounds each.

(B) No *flammable liquid* or *combustible liquid* shall be used for cooking or any other purpose on any mobile food unit.

(C) No mobile food unit shall store or use *LPG* for cooking or any other purpose within:

(*1*) two (2) feet of any combustible material;

(*2*) two (2) feet of any building, except as follows:

(*a*) five (5) feet of any below-grade building opening, including any door, openable window or intake or exhaust vent;

(*b*) ten (10) feet of any building of wood frame construction;

(*c*) 20 feet of any building entrance; and

(*d*) ten (10) feet of any building occupied as a multiple dwelling, or any building occupied for educational, health care or religious purposes, a place of public assembly, or other place of public gathering;

(*3*) five (5) feet of any *flammable gas* storage, including another mobile food unit equipped with *LPG containers*;

(*4*) five (5) feet of any subway vent or other opening, except a subway entrance or exit;

(*5*) ten (10) feet of any subway entrance or exit; and

(*6*) ten (10) feet of any vent or fill line of any *flammable liquid* storage tank.

(D) All mobile food units that are *motor vehicles* shall also comply with the restrictions applicable to vehicles equipped with *LPG containers* set forth in R3809-01(j)(5)(A).

(E) *LPG container* valves shall be closed when the mobile food unit or its cooking equipment is not in use.

(F) Each mobile food unit that is a *motor vehicle* shall be provided with a portable fire extinguisher with at least a 20-B:C rating. Each mobile food unit that is not a *motor vehicle* shall be provided with a portable fire extinguisher with at least a 2-B:C rating, which shall be mounted on the mobile food unit away from the heat source.

(7) Commercial establishments. Commercial establishments which store, handle and use *LPG* for cooking and oil burner ignition shall comply with the following requirements:

(A) *LPG* storage, *handling* and use shall be limited to *LPG containers* with a capacity not greater than 16.4 ounces unless the *container* is connected for use in a stationary installation.

(B) All *LPG* devices, equipment and systems shall be installed by a *plumber*.

(C) Rigid piping shall be used for all connections between *LPG* devices, equipment and systems and *LPG containers*.

(D) Flexible metallic hoses and/or tubing may be used where flexibility is required for commercial oil burner ignition or cooking operations, provided that the hose or tubing is designed for use with *LPG*, and the length of hose or tubing does not exceed six (6) feet.

(E) *LPG* storage and use for the purposes authorized by R3809-01(j)(7) is subject to the prohibition set forth in FC3805.3(10), and shall be discontinued in compliance with the requirements of R3809-01(k)(2).

(8) Moored vessels. Residentially occupied vessels moored in marinas which store, handle and use *LPG* for space heating and cooking purposes shall comply with the following requirements:

(A) *LPG* storage, *handling* and use shall be limited to two (2) *LPG containers*.

(B) All *LPG* devices, equipment and systems used on such a vessel shall serve only that vessel and no others.

(C) All *LPG* devices, equipment and system shall be installed either by the vessel manufacturer or by a *plumber*.

(9) Street fairs, bazaars, carnivals, concerts, festivals and similar outdoor public gatherings. *LPG* storage, *handling* and use in connection with any street fair, bazaar, concert, festival or other similar outdoor public gathering shall be subject to the following requirements:

(A) *LPG* storage and use shall be limited to two (2) *LPG containers* per *LPG* device or equipment, each with a capacity not greater than 20 pounds.

(B) There shall be a person responsible for the operation of each *LPG* device or equipment. One (1) person may not operate more than one (1) *LPG* device or equipment.

(C) *LPG* shall not be stored, handled or used for cooking or any other purpose within the distances set forth in R3809-01(j)(6)(D), and a separation distance of five (5) feet shall be maintained between *LPG containers* connected for use to *LPG* device or equipment.

(D) Notwithstanding the provisions of R3809-01(b)(2)(H), nonmetallic hose may be used at a street fair, bazaar, carnival, concert, festival or similar outdoor public gathering where:

(*1*) The *LPG containers*, appliances and all equipment and components are stored, used and connected for use outdoors;

(*2*) The length of the hose does not exceed six (6) feet; and

(*3*) The hose is designed for a working pressure of not less than 250 *psi*.

(E) The *certificate of fitness* holder supervising *LPG* storage, *handling* and use in connection with the event shall inspect each device, equipment or system and incidental storage area prior to commencement of use each day to confirm that all such devices, equipment and systems are in good working order and that all necessary and appropriate fire safety precautions have been taken. A record of such surveillance shall be maintained either at a central location for all concessionaires, or at each concession area, booth or other location, and shall be made available for inspection by any *Department* representative.

(10) Hot air balloon operations. *LPG* h*andling* and use for hot air balloon operations shall comply with following requirements:

(A) The storage, *handling* and use of *LPG*, including any reserve storage incidental to use, shall not exceed a total of 300 pounds.

(B) Pursuant to FC3805.3(13) and R3809-01(b)(2)(G), *LPG* may be withdrawn and utilized in liquid form if required by the nature of the operation.

(C) The burner and fuel system are operated in accordance with the FAA Flight manual and manufacturer's instruction.

(D) The entire operation shall be conducted under the *personal supervision* of an FAA license holder and a *certificate of fitness* holder. Such individual shall continuously monitor the area to ensure compliance with the provisions of FC Chapter 38 and this section.

(E) Hot air balloons shall be secured in an approved manner by not less than a three-point tie down during LPG operations and whenever the balloon is filled with hot air.

(F) *LPG containers* shall not be left unattended. *LPG containers* shall be removed from the site at the conclusion of each day's hot air balloon operations, and shall not be left at the site overnight.

(G) Smoking is prohibited on the balloon or within 25 feet of any *LPG* storage, handling or use.

(H) There shall be no storage, *handling* or use of *flammable liquids* or *combustible liquids* within 20 feet of the area approved for hot air balloon operations, as set forth in FC1111.3.

(I) There shall be no storage, *handling* or use of *flammable gases* within 20 feet of the area approved for hot air balloon operations, as set forth in FC1111.3.

(J) The hot air balloon shall be provided with a portable fire extinguisher with at least a 10-B:C rating. The *LPG* storage area shall be provided with a separate portable fire extinguisher with at least a 10-B:C rating.

(K) Pursuant to FC3805.3(14) and R3809-01(b)(2)(H), nonmetallic hose may be used where flexibility is required for such operation, provided that:

(*1*) The length of the hose is as short as practicable; and

(*2*) The hose shall is designed for a working pressure of 350 *psi.*

(11) Group A occupancies and similar public gathering places. *LPG* storage, *handling* and use in *Group A occupancies* and similar public gathering places shall additionally comply with the requirements of R308-01.

CHAPTER 39
ORGANIC PEROXIDES

§3901-3906 Reserved

§ 3901-3906 Reserved

CHAPTER 40
OXIDIZERS

§4001-4006 Reserved

§ 4001-4006 Reserved

CHAPTER 41
PYROPHORIC MATERIALS

§4101-4107 Reserved

§ 4101-4107 Reserved

CHAPTER 42
PYROXYLIN PLASTICS

§4201-4205 Reserved

§ 4201-4205 Reserved

CHAPTER 43
UNSTABLE(REACTIVE) MATERIALS

§4301-4306 Reserved

§ 4301-4306 Reserved

CHAPTER 44
WATER-REACTIVE SOLIDS AND LIQUIDS

§4401-4406 Reserved

§ 4401-4406 Reserved

CHAPTER 45
REFERENCED STANDARDS

§4501-4502 Reserved

§ 4501-4502 Reserved

CHAPTER 46
FEES

§4601-01 New and Amended Fees
§4602-4603 Reserved
§4604-01 Compensation for Operation of Auxiliary Fire Alarm Systems

§ 4601-01 New and Amended Fees

(a) Scope. This section sets forth provisions relating to the *Department*'s adoption of new and amended fees and incorporation of such fees into FC Appendix A.

(b) General Provisions

(1) Adoption. The owner or applicant shall pay the fees set forth in this section for permits, inspections, witnessing of tests and other services, in accordance with the provisions of FC Appendix A.

(2) Incorporation. Pursuant to FC102.6.2, such new and amended fees shall be deemed incorporated into FC Appendix A.

(3) Identification of amendments

(A) The incorporation of new fees into FC Appendix A is indicated by underlining.

(B) The incorporation of amended fees into FC Appendix A is indicated by bracketing the provision and/or fee to be deleted from FC Appendix A and underlining the amended provision and/or fee to be added.

(c) Certificate Fees (FC A01). FCA01.1 is amended to read as follows:

* * *

3. Certificate of fitness

Original application (including written examination) (for 3 years) (except fire and life safety director)	$25.00
Fire and life safety director	
Original application (including one written examination) (for 3 years)	$25.00
Each additional written examination	$25.00
Practical (on-site) examination for fire and life safety director (fire safety and non-fire emergency components)	[$445.00] $750.00
Practical (on-site) examination (fire safety component only)	$445.00
Practical (on-site) examination [for fire safety/EAP director] (non-fire emergency component only)	$305.00
Renewal application (without examination)	$5.00

* * *

16. ARC system testing company certificate

Original application	$105.00
Renewal application	$50.00
Original portable radio programming (per radio)	$75.00
Portable radio inspection (per radio)	$75.00

(d) Training School Accreditation Fees (FC A02). FC A02.1 is amended to read as follows:

* * *

6. Active shooter and medical emergency preparedness training schools

Original application	$2,940.00
Renewal application	$420.00

(e) Permit, Inspection and Plan Examination Fees (FC A03). FC A03 is amended to read as follows:

* * *

24. [Fire department in-building] <u>In-building</u> auxiliary radio communication systems <u>and other in-building radio communication systems</u>

<u>To maintain and operate an in-building auxiliary radio communication system or other in-building radio communication system</u>	
<u>Original application (including acceptance testing)</u>	$105.00<u>, plus $50.00 per building floor included in application</u>
<u>Renewal application</u>	<u>$105.00</u>

* * *

(f) Administrative Services Fees (FC A04). Reserved

(g) Late Renewals (FC A05). Reserved

§ 4602-4603 Reserved

§ 4604-01 Compensation for Operation of Auxiliary Fire Alarm Systems

(a) Scope. This section sets forth the compensation required to be paid to the City of New York pursuant to *Administrative Code* §15-127(a)(1) by a *central station company* or a *proprietary central station*, as those terms are defined in R901-02(b), for operation of an *auxiliary fire alarm system*.

(b) Definition. The following term shall, for purposes of this section and used elsewhere in the *rules*, have the meanings shown herein:

Auxiliary Fire Alarm System. The re-transmission or other reporting to the *Department* of *alarm signals* from the monitoring of *fire alarm systems* by a *central station company*, *proprietary central station*, or any other person or company that receives compensation or derives any other financial benefit therefrom.

(c) Required Compensation. Each *central station company* shall pay to the *Department*, on an annual basis, or such other basis as the *Department* may require or authorize, its proportionate share of the cost associated with its use of the *Department*'s fire alarm communications system, as calculated in accordance with the provisions of this section.

(d) Computation of Compensation

(1) The *Department* will calculate, not less frequently than on an annual basis, the compensation each *central station company* is required to remit to the *Department*, in accordance with the computation set forth in this subdivision.

(2) Compensation shall be based on the costs of operating the *Department*'s communications offices for the preceding fiscal year, allocated according to the number of *fire alarm systems* monitored by each *central station company* as of July 1st of the preceding fiscal year, and the volume of *central station company* alarm traffic generated by each *central station company* in the preceding fiscal year.

(3) Step One: Calculation of Total Central Station Company Cost. This amount will be calculated as follows:

(A) the total alarm traffic handled by the *Department*'s communications offices is calculated for the preceding fiscal year;

(B) the alarm traffic generated by all *central station companies* ("total *central station* alarm traffic") is calculated as a percentage of the total alarm traffic for the preceding fiscal year; and

(C) the total cost of operating the *Department*'s communications offices is calculated for the preceding fiscal year ("total operating cost") and is multiplied by the percentage representing the total *central station* alarm traffic in the preceding fiscal year, to obtain the cost attributable to the total *central station* alarm traffic for the preceding fiscal year ("total *central station* cost").

(4) Step Two: Calculation of Individual Central Station Compensation Amounts. These amounts will be calculated as follows:

(A) the total number of *fire alarm systems* monitored by *central station companies* as of July 1st of the preceding fiscal year, and the number of *fire alarm systems* monitored by each *central station company* as of such date, are tabulated, and the percentage of the total number of monitored *fire alarm systems* is calculated for each *central station company* ("alarm system allocation");

(B) the total *central station* alarm traffic generated by each *central station company* is separately tabulated for the preceding fiscal year, and each *central station company*'s percentage of the total *central station* alarm traffic is calculated ("alarm traffic allocation");

(C) the two percentages representing the alarm system and alarm traffic allocations are averaged (added together and divided by two) to obtain a

single combined percentage for each *central station company* ("total allocation"); and

(D) each *central station company* is charged the percentage representing its total allocation of the total *central station* cost for the preceding fiscal year.

(e) Billing and Payment

(1) The *Department* will bill each *central station company* on or about October 1st for the coming year, or such other date as the *Department* may designate.

(2) Each *central station company* shall remit payment in full no later than 60 days of receipt of the invoice.

(3) Any *central station company* that fails to timely remit payment shall additionally be liable to the *Department* for interest on the compensation due and owing to the *Department*. Such interest shall be computed for the period from the date of the bill to the date of payment, based on the amount of the bill and the rate of interest set forth in Section 5004 of the New York Civil Practice Law and Rules. Such interest shall constitute part of the compensation required by this section.

CHAPTER 47
REFERENCED STANDARD MODIFICATIONS

§4701-01 Referenced Standard Modifications and Amendments Thereto
§4702-01 National Fire Protection Association Referenced Standards

§ 4701-01 Referenced Standard Modifications and Amendments Thereto

(a) Scope. This section sets forth provisions relating to the *Department*'s adoption of modifications to the Referenced Standards set forth in FC Chapter 45, adoption of amendments to the Referenced Standard modifications codified in FC Appendix B, and incorporation of such modifications and amendments into FC Appendix B.

(b) General Provisions

(1) Adoption. The Referenced Standards set forth in FC Chapter 45, and the modifications thereto, as codified in FC Appendix B, are amended as set forth in this chapter of the *rules*.

(2) Incorporation. Pursuant to FC102.6.2, such Referenced Standard modifications and amendments to Referenced Standard modifications shall be deemed incorporated into FC Appendix B.

(3) Identification of modifications and amendments.

(A) The text of the Referenced Standard modifications to be incorporated into FC Appendix B is set forth in the respective sections of this chapter of the *rules*. The addition of such modifications to FC Appendix B is indicated by underlining.

(B) When a Referenced Standard modification codified in FC Appendix B is to be amended, the existing, codified text of the Referenced Standard modification is shown, with the language deleted in [brackets] and language added underlined.

§4702-01 National Fire Protection Association Referenced Standards

(a) Scope. This section sets forth modifications to the National Fire Protection Association Referenced Standards set forth in FC Chapter 45.

(b) Referenced Standard Modifications. FC B01.1 is amended to read as follows:

B01.1. National Fire Protection Association standards. The provisions of the following National Fire Protection Association (NFPA) standards shall be modified as follows:

NFPA 45-2004. The provisions of NFPA 45-2004, Standard on Fire Protection for Laboratories Using Chemicals, are modified as follows:

1. In Section 1.1.1, add "in this standard," after "defined". Add a new sentence to the end of the section, to read "This standard shall additionally apply to any non-production laboratory as defined in FC2702.1.".

2. In Section 1.1.2(1)(b), delete "NFPA 54, National Fuel Gas Code" and replace with "the Fuel Gas Code". Add an exception to the end of Section 1.1.2(1), to read "This exception shall not apply to educational laboratory units and instructional laboratory units."

3. Add a new Section, 1.1.4, to read "**1.1.4** The provisions of this standard are adopted only with respect to operational and maintenance requirements. Pursuant to FC102.2, operational and maintenance provisions are applicable to new and existing facilities."

4. Delete Section 1.4 in its entirety.

5. Delete Section 1.5 in its entirety.

6. In Section 2.2:

6.1. Delete “2002 edition” of NFPA 10 and replace with “2007 edition”.

6.2. Delete “2002 edition” of NFPA 11 and replace with “2005 edition, as modified by Appendix B of the Fire Code”.

6.3. Delete “NFPA 11A, Standard for Medium- and High-Expansion Foam Systems, 1999 edition.”.

6.4. Delete “2000 edition” of NFPA 12 and replace with “2008 edition, as modified by Appendix B of the Fire Code”.

6.5. Delete “2002 edition” of NFPA 13 and replace with “2007 edition, as modified by Appendix B of the Fire Code”.

6.6. Delete “2002 edition” of NFPA 17 and replace with “2002 edition, as modified by Appendix B of the Fire Code”.

6.7. Delete “2002 edition” of NFPA 17A and replace with “2002 edition, as modified by Appendix B of the Fire Code”.

6.8. Delete “2002 edition” of NFPA 25 and replace with “2011 edition”.

6.9. Delete “2003 edition” of NFPA 30 and replace with “2008 edition”.

6.10. Delete “2003 edition” of NFPA 33 and replace with “2007 edition”.

6.11. Delete “NFPA 50, Standard for Bulk Oxygen Systems at Consumer Sites, 2001 edition.”.

6.12. Delete “NFPA 50A, Standard for Gaseous Hydrogen Systems at Consumer Sites, 1999 edition.”.

6.13. Delete “NFPA 50B, Standard for Liquefied Hydrogen Systems at Consumer Sites, 1999 edition.”.

6.14. Delete “2002 edition” of NFPA 51 and replace with “2007 edition”.

6.15 Delete “NFPA 54, National Fuel Gas Code, 2002 edition” and replace with “The Fuel Gas Code”.

6.16. Delete “2003 edition” of NFPA 55 and replace with “2010 edition”.

6.17. Delete “2004 edition” of NFPA 58 and replace with “2008 edition”.

6.18. Delete “2002 edition” of NFPA 69 and replace with “2008 edition”.

6.19. Delete “NFPA 70, National Electrical Code, 2005 edition.”.

6.20. Delete “2002 edition” of NFPA 72 and replace with “2010 edition, as modified by Appendix B of the Fire Code”.

6.21. Delete “1999 edition” of NFPA 80 and replace with “2007 edition”.

6.22. Delete “2003 edition” of NFPA 86 and replace with “2007 edition”.

6.23. Delete “2002 edition” of NFPA 99 and replace with “2005 edition”.

6.24. Delete “2001 edition” of NFPA 495 and replace with “2006 edition”.

6.25. Delete “2001 edition” of NFPA 704 and replace with “2007 edition”.

6.26. Delete “2003 edition” of NFPA 750 and replace with “2006 edition, as modified by Appendix B of the Fire Code”.

6.27. Delete “NFPA 1962, Standard for the Inspection, Care, and Use of Fire Hose, Couplings, and Nozzles and the Service Testing of Fire Hose, 2003 edition.”.

6.28. Delete “2004 edition” of NFPA 2001 and replace with “2008 edition, as modified by Appendix B of the Fire Code”.

6.29. Add “NFPA 2112, Standard on Flame-Resistant Garments for Protection of Industrial Personnel Against Flash Fire, 2012 edition.”.

7. In Section 2.3.3, delete “ASME Boiler and Pressure Vessel Code, Section VIII, 2004” and replace with “ASME Boiler and Pressure Vessel Code, Section I, II, IV, V, VI and VIII, 2010”.

8. Delete Section 3.2.7 and replace with Section 3.2.7 of NFPA 45-2015.

9. In Section 3.3.14, add “for students” after the word “purposes” and delete “by six or more persons for four or more hours per day or more than 12 hours per week”.

10. Add a new section, 3.3.24.1, by inserting Section 3.3.24 of NFPA 45-2015, which is renumbered for purposes of the Fire Code Referenced Standard as 3.3.24.1.

11. Delete Section 3.3.31 and replace with Section 3.3.31 of NFPA 45-2015, except delete “under the direct supervision of an instructor” and add a sentence to the end, to

read “Laboratory units used for graduate or postgraduate research are not considered to be instructional laboratory units.”

12. Add a new section, 3.3.31.1, by inserting the text of Section 3.3.32 of NFPA 45-2015, which is renumbered for purposes of the Fire Code Referenced Standard as 3.3.31.1.

13. Delete Section 3.3.36 and replace with “**3.3.36 Laboratory Unit.** An enclosed space of a minimum one-hour fire-rated construction, designed or used as a non-production laboratory. Laboratory units may include one or more separate laboratory work areas, and accessory storage rooms or spaces within or contiguous with the laboratory unit, such as offices and lavatories.”

14. Add a new section, 3.3.51.1, by inserting the text of Section 3.3.53 of NFPA 45-2015, which is renumbered for purposes of the Fire Code Referenced Standard as 3.3.51.1.

15. In Section 3.3.57, delete “Section 6.3 of NFPA 30, Flammable and Combustible Liquids Code” and replace with “FC3404.3.2”.

16. Delete Section 4.3.1 and replace with Section 1.1.4 of NFPA 45-2015, which is renumbered for purposes of the Fire Code Referenced Standard as 4.3.1, except:

    16.1 In Section 1.1.4, insert “listed below” after the word “concentrations”, and delete “, the following” from the second sentence.

    16.2 Insert a semicolon to the end of Sections 1.1.4(1), 1.1.4(2) and 1.1.4(3).

    16.3 In Section 1.1.4(4), insert “; and” after “peroxides”.

    16.4 Insert a period to the end of Section 1.1.4(5).

    16.5 Delete the sentence after Section 1.1.4(5).

17. In Section 5.6, delete “NFPA 70, National Electrical Code” and replace with “the Electrical Code”.

18. In Section 5.6.2, delete “Article 500 of NFPA 70, National Electrical Code” and replace with “the Electrical Code”.

19. Delete Section 6.6.3.1 and replace with Section 6.5.3.1 of NFPA 45-2015, which is renumbered for purposes of the Fire Code Referenced Standard as 6.6.3.1, except:

    19.1. In the section title, delete “Provisions Within the Emergency Action Plan” and replace with “Emergency Plan”.

    19.2. Delete the first sentence and replace with “The owner of a chemical laboratory shall cause plans for laboratory emergencies to be prepared.”

19.3. In the second sentence, delete “action” between the words “emergency” and “plan”.

19.4 In Section 6.5.3.1(1), insert a semicolon after “alarm”.

19.5. In Section 6.5.3.1(2), delete “fire department, governmental agencies, or other emergency responders or contacts, as required” and replace with “Fire Department and other emergency response agencies;”.

19.6 In Section 6.5.3.1(3), before “as applicable” insert “including primary and secondary evacuation routes,” and insert a semicolon to the end of the section.

19.7 In Sections 6.5.3.1(4) and 6.5.3.1(7), insert a semicolon to the end of the section.

19.8. In Section 6.5.3.1(5), insert “regular emergency” between the words “conducting” and “drills”, and insert a semicolon to the end of the section.

19.9 In Section 6.5.3.1(6), delete “shutdown” and replace with “shut down”, and insert a semicolon to the end of the section.

19.10. Delete Section 6.5.3.1(8).

19.11. Renumber Section 6.5.3.1(9) as 6.5.3.1(8), and insert a semicolon to the end of the section.

19.12 Renumber Section 6.5.3.1(10) as 6.5.3.1(9), and insert “; and” to the end of the section.

19.13 Renumber Section 6.5.3.1(11) as 6.5.3.1(10), and delete “to be taken”, and insert a period to the end of the section.

20. Add a new section, 6.6.3.3, by inserting the text of Section 6.5.3.3 of NFPA 45-2015, which is renumbered for purposes of the Fire Code Referenced Standard as 6.6.3.3, except move “on the emergency plan” from the end of the sentence to between the words “trained” and “prior”, and add a sentence to the end, to read “Records for such training shall be maintained in accordance with FC107.7.”

21. Add new sections, 6.7 through 6.7.4, by inserting the text of Sections 6.6, and 6.6.2 through 6.6.5 of NFPA 45-2015. For purposes of the Fire Code Referenced Standard, Section 6.6 is renumbered as 6.7, and Sections 6.6.2, 6.6.3, 6.6.4 and 6.6.5 are renumbered as 6.7.1, 6.7.2, 6.7.3 and 6.7.4 respectively, except:

21.1. In Section 6.6.2, delete “where” and replace with “by any person that uses”, and delete “are used”.

21.2. In Section 6.6.3, insert a comma after the word “worn”, insert “, by any person that uses” after the word “possible”, and delete “are used”.

21.3. In Section 6.6.4, delete “Natural-fiber” and replace with “Any person that uses pyrophoric reagents outside the inert atmosphere of a glovebox shall wear natural-fiber”, delete “shall be worn”, insert “their” after the word “under”, delete “the” after the word “on” and replace with “their”, and delete “where pyrophoric reagents are used outside the inert atmosphere of a glovebox” after the word “feet”.

22. Add a new section, 7.1.3, by inserting the text of Section 7.2.2.1 of NFPA 45-2015, which is renumbered for purposes of the Fire Code Referenced Standard as 7.1.3, except in the first sentence of such section, insert “involving the handling and use of hazardous materials” after the word “operations”, and in the second sentence of such section, delete “in a safe condition” and replace with “safely”, delete “during the time that” and replace with “until”, and delete the word “exists” and replace with “is corrected”.

23. Delete Section 8.13.2 and replace with “All activities inside the hood shall be suspended immediately following the discovery of deficiencies that cause the hood to perform outside of limits established by regulatory authority requirements and/or nationally recognized industry standards”.

24. Delete Section 9.2.3.4 and replace with Sections 8.2.4.4 and 13.4.2 of NFPA 45-2015, which are combined into a single section and renumbered for purposes of the Fire Code Referenced Standard as 9.2.3.4, except:

24.1. In Section 8.2.4.4, delete the words “might”, “(i.e., time sensitive)”, and “, and properly managed”.

24.2. In the first sentence of Section 13.4.2, insert “in unopened containers” after the word “storage”, insert “also” between the words “shall” and “be”, and delete “upon receipt and when first opened to facilitate hazard control” and replace with “when received into the laboratory chemical inventory”.

24.3. In the second sentence of Section 13.4.2, replace “Materials” with “Such materials”, insert “managed and” before the word “disposed”, insert a comma after the word “date”, and delete “(SDSs)(see 8.2.4.4 and A.8.2.4.4)”.

25. Delete Section 9.2.3.4.1 and replace with Section 8.2.4.4.1 of NFPA 45-2015, which is renumbered for purposes of the Fire Code Referenced Standard as 9.2.3.4.1, except

25.1 In Section 8.2.4.4.1 and (1), delete “shall consist of the following elements” and replace with the word “includes”, insert “-” between the words “time” and “sensitive”, and after the word “sensitive” insert “(materials that become hazardous during prolonged storage);”.

25.2 In Section 8.2.4.4.1(2), insert a semi-colon after the word “frequency”.

25.3 In Section 8.2.4.4.1(3), insert “; and” after the word “material”.

25.4 In Section 8.2.4.4.1($), insert a period after the word “results”.

26. Add a new section, 9.2.3.7, by inserting the text of Section 8.2.4.7 of NFPA 45-2015, which is renumbered for purposes of the Fire Code Referenced Standard as 9.2.3.7, except delete “shall be” and replace with “is”, and add a new sentence to the end, to read “This prohibition does not apply to the storage of chemicals used in a long term experiment or research, chemicals for which special ventilation requirements are recommended based on the unusually hazardous nature of the chemicals, and any other chemical storage approved by the Fire Department.”

27. Delete Sections 9.3, 9.4 and 9.5 in their entirety.

28. Add a new section, 9.3, to read “9.3 Chemicals.” and two new sections, 9.3.1 and 9.3.2, by inserting the text of Sections 8.2.3.6 and 8.2.3.7 of NFPA 45-2015, which are renumbered for purposes of the Fire Code Referenced Standard as 9.3.1 and 9.3.2 respectively, except in Section 8.2.3.7, delete “(SDS)”.

29. Add new sections, 9.4 through 9.4.5, by inserting the text of Sections 8.3, 8.3.2, 8.3.3, 8.3.5, 8.3.4 and 8.3.6 of NFPA 45-2015, which are renumbered for purposes of the Fire Code Referenced Standard as 9.4, 9.4.1, 9.4.2, 9.4.3, 9.4.4 and 9.4.5 respectively, except:

    29.1. In Section 8.3.3, replace “with the hazards of the waste chemicals” with “in accordance with the regulations of the New York State Department of Environmental Conservation”.

    29.2. In Section 8.3.5, replace “Waste” with “Flammable and combustible liquid waste”, replace “type” with “types”, and replace “9.1.2” with “10.1.4”.

    29.3. In Section 8.3.4, replace “not exceed 20 l (5 gal)” with “that are not required to comply with the requirements of Section 9.4.3 shall be subject to the maximum container sizes and types in accordance with Class II combustible liquids set forth in Table 10.1.4”.

    29.4. In Section 8.3.6, replace “subject to” with “included in”.

30. In Section 10.5.1, replace “NFPA 30, Flammable and Combustible Liquids Code” with “FC3404.3.2”.

31. Add new sections, 12.1.7 through 12.1.7.11, by inserting the text of Sections 11.2.6 through 11.2.6.11 of NFPA 45-2015, which are renumbered for purposes of the Fire

Code Referenced Standard as 12.1.7 through 12.1.7.11 respectively, except in Section 11.2.6.3, replace “6.6” with “6.7”.

32. Add new sections, 12.1.8 and 12.1.8.1, by inserting the text of Sections 11.2.7 and 11.2.7.1 of NFPA 45-2015, which are renumbered for purposes of the Fire Code Referenced Standard as 12.1.8 and 12.1.8.1 respectively, except:

    32.1. In the second sentence of Section 11.2.7.1(2), replace “Tubing” with “Hose/tubing”, replace “clamped” with “gas-tight”, and add a sentence at the end, to read “Prior to each use, all connections shall be verified for tightness.”.

    32.2. Add a new Section 11.2.7.1(5), to read “(5) Combustible materials shall be kept at least 0.610 m (2 ft) away from the open flame.”.

33. Add a new section, 12.1.8.2, by inserting the text of Section 11.2.7.2 of NFPA 45-2015, which is renumbered for purposes of the Fire Code Referenced Standard as 12.1.8.2, except:

    33.1. In Section 11.2.7.2, replace “11.2.7.1” with “12.1.8.1”.

    33.2. In Section 11.2.7.2(1), insert “(0.1 pt)” after “50 ml”.

34. In Section 12.2.1.1, delete “, including NFPA 70, National Electrical Code” and replace with “and the Electrical Code”.

35. In Section 12.2.2.2, delete “Article 501 of NFPA 70, National Electrical Code” and replace with “the Electrical Code”.

36. In Section 12.2.2.2.1(1), delete “Article 501 of NFPA 70, National Electrical Code” and replace with “the Electrical Code”.

37. In Section 12.2.2.3, delete “Article 501 of NFPA 70, National Electrical Code” and replace with “the Electrical Code”.

38. Add a new chapter, 14, by inserting the text of Chapter 12 of NFPA 45-2015, except:

    38.1. Chapter 12 is renumbered as 14.

    38.2. Section 12.1 is renumbered as 14.1, except delete “new and existing”.

    38.3. Add a new section, 14.2, to read “**14.2 Supervision.** Educational laboratory units and instructional laboratory units shall be under the direct supervision of an instructor while the laboratory is in operation.”

    38.4. Add a new section, 14.3, to read “**14.3 Hazard Risk Assessment.** Prior to instructors performing demonstrations or students conducting experiments using

hazardous chemicals, a documented hazard risk assessment shall be performed. A hazard risk assessment is a written document prepared by a qualified person, and shall include all of the following:

(1) An evaluation of the hazards of the demonstration or experiment;

(2) Appropriate personal protective equipment required;

(3) Safe work procedures;

(4) Emergency procedures; and

(5) Waste disposal procedures."

38.5. Section 12.2 is renumbered as 14.4 and in such section, replace "Where" with "Whenever", and replace "required to perform a documented hazard risk assessment, provide a safety briefing to students, provide adequate personal protective equipment (PPE), and place a safety barrier (as required)" with "fully familiar with the hazard risk assessment, provide a safety briefing to students, ensure that adequate personal protective equipment has been provided and is being properly used, and ensure that safety barriers, when required by 14.5.2.1.3, are in place".

38.6. Section 12.2.1 is renumbered as 14.4.1, except replace "PPE" with "personal protective equipment".

38.7. Section 12.3 is renumbered as 14.5.

38.8. Section 12.3.1 is renumbered as 14.5.1 and in the first sentence of such section, replace "labs" with "laboratories", in the second sentence of such section, replace "lab classroom" with "laboratory" and replace "one day's use, preapportioned to the amount needed for each class session" with "daily use in the laboratory", and in the last sentence of such section, replace "amount of chemical that is not in use during an individual class session" with "chemicals stored in an educational laboratory" and add at the end ", except for the amounts actually in use during an individual class session".

38.9. Section 12.3.1.1 is renumbered as 14.5.1.1, except replace "9.1.1" with "10.1.1" and replace "fire or building codes" with "the Fire Code and the Building Code".

38.10. Section 12.3.1.2 is renumbered as 14.5.1.2.

38.11. Section 12.3.1.3 is renumbered as 14.5.1.3.

38.12. Section 12.3.1.4 is renumbered as 14.5.1.4.

38.13. Section 12.3.1.5 is renumbered as 14.5.1.5, except replace “only when” with “while”.

38.14. Section 12.3.2 is renumbered as 14.5.2.

38.15. Section 12.3.2.1 is renumbered as 14.5.2.1, except replace “12.3.2.1.1”, “12.3.2.1.2”, “12.3.2.1.3” and “12.3.2.1.4” with “14.5.2.1.1”, “14.5.2.1.2”, “14.5.2.1.3” and “14.5.2.1.4” respectively.

38.16. Section 12.3.2.1.1 is renumbered as 14.5.2.1.1, except delete “primary”.

38.17. Section 12.3.2.1.2 is renumbered as 14.5.2.1.2, except delete “being evolved” at the end of the first sentence, and delete the last sentence.

38.18. Section 12.3.2.1.3 is renumbered as 14.5.2.1.3, except replace “12.3.2.1.4” with “14.5.2.1.4”.

38.19. Section 12.3.2.1.4 is renumbered as 14.5.2.1.4.

38.20. Section 12.3.2.2 is renumbered as 14.5.2.2.

38.21. Section 12.3.2.3 is renumbered as 14.5.2.3, except replace “In educational and instructional laboratories where experiments are conducted by students, the” with “The”, replace “be responsible for conducting” with “conduct”, and insert “conducted by students” between the words “experiment” and “to”.

RULES OF THE
FIRE DEPARTMENT
OF THE CITY OF NEW YORK

**(TITLE 3 OF THE RULES OF
THE CITY OF NEW YORK)**

CHAPTER 48
PRE-EXISTING FACILITIES

§4801	Reserved
§4802-01	Pre-Existing Definitions
§4803-01	General Precautions Against Fire in Pre-Existing Facilities
§4804-01	Pre-Existing Emergency Planning and Preparedness
§4805-4808	Reserved
§4809-01	Fire Protection Systems in Pre-Existing Facilities
§4810-01	Means of Egress in Pre-Existing Facilities
§4811-4821	Reserved
§4822-01	Pre-Existing Motor Fuel-Dispensing Facilities and Repair Garages
§4823-4826	Reserved
§4827-01	Storage of Hazardous Materials in Pre-Existing Facilities
§4828-01	Storage of Aerosols in Pre-Existing Facilities
§4829-01	Storage of Combustible Fibers in Pre-Existing Facilities
§4830-01	Storage of Compressed Gases in Pre-Existing Facilities
§4831-01	Storage of Corrosive Materials in Pre-Existing Facilities
§4832-01	Storage of Cryogenic Fluids in Pre-Existing Facilities
§4833-01	Storage of Explosives and Special Effects in Pre-Existing Facilities
§4834-01	Storage of Flammable and Combustible Liquids in Pre-Existing Facilities
§4835-01	Storage of Flammable Gases in Pre-Existing Facilities
§4836-4837	Reserved
§4838-01	Storage of Liquefied Petroleum Gases in Pre-Existing Facilities
§4839-01	Storage of Organic Peroxides in Pre-Existing Facilities
§4840-4844	Reserved

§ 4801 Reserved

§ 4802-01 Pre-Existing Definitions

(a) Scope. This section sets forth definitions of terms used in the *Fire Prevention Code* and former Fire Department *rules* in effect on June 30, 2008 that are consolidated in Chapter 48 of the *rules.*

(b) Definitions

Board of Standards and Appeals. New York City Board of Standards and Appeals.

Department of Buildings. New York City Department of Buildings.

Department of Small Business Services. New York City Department of Small Business Services.

Multiple dwelling. A multiple dwelling, as defined in subdivision seven of section four of the multiple dwelling law, including any portion of such dwelling used for other than living or sleeping purposes, or for any business, commercial or other non-residential purpose. (Fire Prevention Code, former Administrative Code §27-4002(27a))

Structure. Any building or construction of any kind. (Fire Prevention Code, former Administrative Code §27-4002(38)(c))

§ 4803-01 General Precautions Against Fire in Pre-Existing Facilities

(a) Scope. This section consolidates the *Fire Prevention Code* and former Fire Department *rules* in effect on June 30, 2008 that are applicable to the design and installation of fire safety precautions in *pre-existing facilities.*

(b) Definitions. Reserved

(c) Boatyards, Marinas and Similar Facilities. Boatyards, marinas and similar facilities in compliance with former Fire Department *rule* 3 RCNY §5-01 are allowed and would be approved under the provisions of the Fire Code and the *rules*, and accordingly, such *facilities* shall be designed and installed in compliance with the requirements of R301-01, except that in *pre-existing facilities* with *fire apparatus access roads* less than 38 feet wide, such *fire apparatus access roads* shall be continued in compliance with the provisions of former Fire Department *rule* 3 RCNY §5-01(b) until such time as such *facilities* may be required to comply with the Fire Code and the *rules* with respect to such access roads.

(1) Former Fire Department Rule 3 RCNY §5-01(b)

§5-01 Fire Protection of Boatyards, Marinas and Similar Occupancies

(b) For firefighting purposes, adequate unobstructed aisles and cross aisles of at least 20 foot width shall be provided for both length and width of premises and maintained clear in all directions so that

no point in the yard is further than 75 feet from an access aisle in any direction.

(d) Automotive salvage and wrecking facilities. Automotive salvage and wrecking facilities in compliance with former Fire Department *rule* 3 RCNY §4-01 are allowed and would be approved under the provisions of the Fire Code and the *rules*, and accordingly, such *facilities* shall be designed and installed in compliance with the requirements of FC316, except that in *pre-existing facilities* with *fire apparatus access roads* less than 38 feet wide, such *fire apparatus access roads* shall be continued in compliance with the provisions of the former Fire Department *rule* 3 RCNY §4-01(e)(2)(i) until such time as such *facilities* may be required to comply with the Fire Code and the *rules* with respect to such access roads.

(1) Former Fire Department Rule 3 RCNY §4-01(e)(2)(i)

§4-01 Fire Protection of Automotive Salvage and Wrecking Establishments

(e) Fire protection requirements.

* * *

(2) Access and separation.

* * *

(i) Driveways having a minimum width of fifteen feet shall be provided and shall be so spaced that a maximum grid system of not over fifty feet by one hundred feet is produced. Driveways shall be maintained unobstructed to provide access for Fire Department equipment.

§ 4804-01 Pre-Existing Emergency Planning and Preparedness

(a) Scope. This section consolidates the *Fire Prevention Code* and former Fire Department rules in effect on June 30, 2008 that are applicable to the design and installation of *pre-existing facilities* for purposes of emergency planning and preparedness.

(b) Definitions. Reserved

(c) General Provisions. *Pre-existing facilities*, the design and installation of which for emergency planning and preparedness purposes would not be allowed or approved under the Fire Code, but which, pursuant to FC102.3 and R102-01, may be continued with

respect to such emergency planning and preparedness under the applicable laws, rules and regulations in effect prior to the Fire Code, shall continue to comply with the provisions of such laws, rules and regulations, including former Fire Department *rules* 3 RCNY 34-02, as applicable, with respect to such emergency planning and preparedness, until such time as such *facilities* may be required to comply with the Fire Code and the *rules* with respect to the design and installation of such emergency planning and preparedness.

(d) Life Safety Requirements for Schools with Physically Handicapped Students

(1) Former Fire Department Rule 3 RCNY §34-02

§34-02 Life Safety Requirements for Schools with Physically Handicapped Students

The following life safety requirements shall apply to those public schools included in the Board of Education, Division of School Buildings, ABR/COH Facilities Accessibility Program which is contained in the Jose P. vs Ambach, et al. (Index No. 79 Civ. 270) judgment plan, appendices and stipulations and shall apply to private preschools through secondary schools.

(a) Buildings to be of class 1 (1938 [Administrative] Building Code) construction, or Group 1A, lB, or 1C (1968 Administrative Code), shall conform to the structural, service equipment and occupancy requirement of Chapter 1 of Title 27 of the [Administrative] 1968 Building Code and to the regulations of the Department of Buildings.

* * *

(c) At no time shall occupancy by non-ambulatory students be permitted in basement or cellar area of school unless entire area of basement or cellar is fully sprinklered by a wet automatic sprinkler system (electrical rooms excluded).

(1) Where terrain configuration places cellar or basement Holdings Area(s) in a position that affords accessibility to Fire Department personnel, sprinkler requirements as per subdivision (c) above, may be waived. Such relief is subject to approval of Bureau of Fire Prevention.

(2) Where terrain configuration places cellar or basement space intended for use by non-ambulatory student on a level where egress may be made directly and unencumbered to the exterior of the building via exits

constructed for such purpose, the Holding Area(s) requirements in such cellar or basement space may be waived. Relief from Holding Area(s) provision in this case is subject to approval of Bureau of Fire Prevention.

(d) Holding Area(s) shall be provided on each floor above and below grade level where occupancy by non-ambulatory students is to be permitted.

(1) Holding Area(s) shall be designated room(s) fully enclosed in non-combustible partitions with all door openings therein either of non-combustible material or of solid wood construction located adjacent to an exit stairwell. Egress from the Holding Area(s) shall be by way of a corridor. These rooms shall be provided with a 2-way voice communication system acceptable to the Fire Commissioner that shall be connected to both the custodian's office and the principal's office. The communication system shall be properly maintained in working order at all times. Inspections, test maintenance and record keeping requirements shall be the responsibility of the person holding the certificate of fitness for [the Interior Fire Alarm System] <u>supervision of fire alarm system maintenance</u>, and shall conform to the requirements of [§ 27-4265(g) of the Administrative Code] <u>FC901.6.1</u>.

(2) Holding Area(s) shall face on a street accessible to Fire Department apparatus and be free from physical impediments (e.g. trees) that may interfere with the positioning of Fire Department apparatus.

(3) Windows in Holding Area(s) designated [from] <u>for</u> removal of handicapped students shall provide, when opened, an area free of obstructions that is at least 32" wide and 48" high accessible to Fire Department equipment. Such windows shall be readily openable without the use of a key.

(4) Window sills on windows designated for removal of handicapped students shall be not more than 36" above the floor level of associated Holding Area(s) and shall be painted red, inside and outside, with a sign attached outside, top window pane. This sign shall read "F.D. ACCESS" and shall be not less than 12" x 18" in size. Sign shall be made of metal or other durable non-

combustible material with 4" red lettering in bold type on a white background. Sign shall be properly maintained.

(5) Holding Area(s) shall line up vertically on the facade of each floor of the building.

(6) Doors leading to Holding Area(s) shall be provided with a sign 5" x 18". This sign shall read "HOLDING AREA". Sign shall be made of metal or other durable non-combustible material with 3" red lettering in bold type on a white background. Signs shall be mounted on the lower half of the door and be properly maintained.

(7) Holding Area(s) shall have movable seats and desks and be capable of holding the total number of wheelchairs required to use the Holding Area. Minimum net floor area shall be calculated at 25 square feet per wheelchair and be free of all encumbrances.

(8) Holding Area(s) shall have ceilings and floors which have a minimum one and one-half hour fire rating. Walls shall have a minimum one hour fire rating and all door openings shall be equipped with appropriately rated fire-proof self-closing doors with a minimal vision panel. The maximum size of vision panel shall be 144 square inches. No opening shall be permitted in wall, ceilings or floors unless properly protected.

(9) Holding Area(s) shall be [equipped with a 2 1/2 gallon pressurized water extinguisher] <u>provided with a portable fire extinguisher with at least a 2-A rating</u>. * * *

(10) All ducts/vents which breach or otherwise cause integrity of Holding Area to be violated shall be equipped with an approved combination smoke/heat damper.

(11) Smoke barriers, in accordance with the provisions of §27-369(c) of the [Administrative] <u>1968 Building</u> Code, shall be provided in corridors. Such smoke barriers shall separate the Holding Area and the adjacent exit stairwell from the rest of the building. Doors in such smoke barriers shall comply with the provisions of §27-371(c) of the [Administrative] <u>1968 Building</u> Code except that these smoke stop doors may also be left open if they are arranged to close automatically by an approved smoke

detector on the ceiling immediately adjacent to and on both sides of the doors.

(e) The auditorium shall be fitted to accommodate all persons using wheelchairs in attendance. These accommodations shall be immediately adjacent to and at the same level as a main exit. Existing required aisles, passageways and exits shall not be reduced or obstructed, and legal occupant load shall not be exceeded.

(f) All existing and newly installed elevators shall be equipped with [firemen] firefighter service keys to conform with Fire Department requirements.

(g) Interior Fire Alarm system shall be provided with visual warning signals in addition to the required gongs. Such visual warning signals shall be visible from any location in all corridors and in unsupervised rooms occupied by handicapped students. The visual signal shall be on a separate circuit and control panel. Visual signal shall continue flashing after the four rounds of the Fire Alarm box have run out, and must be manually reset.

* * *

§ 4805-4808 Reserved

§ 4809-01 Fire Protection Systems in Pre-Existing Facilities

(a) Scope. This section consolidates the *Fire Prevention Code* and former Fire Department rules in effect on June 30, 2008 that are applicable to the design and installation of *fire protection systems* in *pre-existing facilities.*

(b) Definitions. Reserved

(c) General Provisions *Pre-existing facilities* with *fire protection systems* the design and installation of which would not be allowed or approved under the Fire Code, but which, pursuant to FC102.3 and R102-01, may be continued with respect to such *fire protection systems* under the applicable laws, rules and regulations in effect prior to the Fire Code, shall continue to comply with the provisions of such laws, rules and regulations, including former Fire Department *rules* 3 RCNY 15-04, 17-07 and 17-08, as applicable, with respect to such *fire protection systems*, until such time as such *facilities* may be required to comply with the Fire Code and the *rules* with respect to the design and installation of such *fire protection systems*.

(d) Commercial Cooking Fire Extinguishing Systems

(1) Former Fire Department Rule 3 RCNY §15-04

§15-04 Extinguishing Systems for Hoods, Vent Pipes, Flues or Ducts*

[*FOOTNOTE IN ORIGINAL: Section is applicable to systems installed on or after 12/14/62 but before 12/6/68. Systems or system changes made post 12/6/68 shall be in accordance with RS 13-3 (Building Code) and NYC Administrative Code §§27-4275 & 27-779.]

(a) Plans. The installer or occupant shall submit three (3) sets of paper cloth drawings to the Bureau of Fire Prevention for approval before any work is commenced. These shall show the entire installation in plan and section, viz: all hoods; ducts; dampers; heat detector units; pipes; nozzles; fans; gas controls; automatic trip devices; manual operating controls; all other details for compliance with these regulations.

(b) Tests. The completed system shall be tested by the installer or occupant, at his <u>or her</u> own risk, in the presence of a Fire Department representative before an approval shall be issued.

(c) Cleaning. The hood and exhaust ducts shall be thoroughly cleaned and be in good repair before the system is installed. They shall be so maintained at all times.

(d) Operation and control. The extinguishing system shall be automatic or both automatic and manual in operation. The manual controls shall be accessibly located at least ten (10) feet from the range and sealed in the closed position with a light wire seal or a break glass control. A sign to indicate the purpose of such valve or control shall be affixed thereto. The automatic operation shall be arranged to shut off the gas, exhaust fans and close the dampers in the exhaust system. The automatic releasing equipment and heat detecting units shall be Underwriters Laboratories approved.

* * *

(f) Location of nozzles and heat detectors. The entire duct system and any deep frying units shall be provided with an adequate number of nozzles. One nozzle shall be installed at the inlet of each duct and one at the inlet side of the damper. Duct nozzles shall not exceed ten (10) feet on centers. Heat detecting units shall be located at all duct inlets.

* * *

(h) Carbon dioxide

(1) Where carbon dioxide is used: There shall be provided at least one fifty (50) pound cylinder of such gas for each installation up to four hundred (400) cubic feet of hood and duct volume up to the damper. For every additional four hundred (400) cubic feet, or portion thereof, an additional fifty (50) pound cylinder shall be installed.

(2) Electrical requirements for the installation of thermostatic detection systems and the operation of safety devices when carbon dioxide systems are used as the extinguishing agent in hoods, vent pipes, flues or ducts to exhaust interior cooking spaces are:

(i) Plans. The plans submitted for approval shall have marked thereon the location of the thermostatic detectors, the damper locations, all alarms, the electrical and mechanical operations of the safety devices as hereby required.

(ii) Equipment approval. All the electrical equipment shall be approved by the Board of Standards and Appeals or the Underwriters Laboratory for the installation for the class of detection, operation and alarm.

(iii) Wiring. The electrical equipment shall be operated on closed circuits, 120 volt systems. The wire shall be rubber covered RHW #14 AWG, installed in rigid iron or steel conduits.

(iv) Operation requirements

(A) The thermostatic device shall be either of a type that is manually reset or the control system shall be so arranged that some manual operation is required to restart the fan after the thermostat has operated. The thermostats shall operate on a 350°F. temperature. The thermostats shall be installed in a manner to enable the removal of the thermostat for repair or testing.

(B) A light, normally on, installed within the hood installation room, to give indication that the source of current for the carbon dioxide system is out of service shall be required.

(C) An alarm bell will be required when two or more 50 lb. carbon dioxide cylinders are required. The alarm shall sound upon the operation of the thermostatic device.

(D) An emergency manual control, preferably in the form of a break glass station, to operate the system is required.

(E) The fan shut down, gas valve closure, damper operations may be electrically or mechanically operated to operate the electric controls.

(i) Fine water spray. Where a fine water spray is used:

All pipe sizes shall conform with and all valve sizes shall conform to the Building Code of the City of New York.

The minimum static pressure at the highest nozzle shall not be less than thirty (30) p.s.i.

One half (1/2) inch open, wide pattern nozzles shall be installed throughout. A water flow alarm may be installed if desired.

(j) Steam. Where steam is used:

A continuous source of steam supply of not less than fifteen (15) p.s.i. shall be provided. The pipe sizes at the source of supply shall not be less than one and one-half (l 1/2) inches in diameter and not less than three quarter (3/4) inch for the last steam jet or outlet. Such outlet shall be a standard one-half (1/2) inch open sprinkler head.

The pipe fittings and valve shall be steam standard. A control valve sealed open shall be located at the source of steam supply.

A steam trap shall be installed on the steam line in such a location so as to remove all condensation up to the automatic control valve located at or near the ranges or ducts.

(k) Application. These rules shall apply to all new installations and to existing systems hereafter altered in any manner.

(e) Fire Alarm Systems

(1) Former Fire Department Rule 3 RCNY §17-07

§17-07 Installation of Interior Fire Alarm Signal Systems in Multiple Dwellings Having Single Room Occupancies

(a) In every such building there shall be provided an adequate and reliable electric, closed circuit interior fire alarm system in accordance with the requirements of the Fire Commissioner.

(1) Buildings exceeding six stories in height, or having more than five thousand square feet in area in any one story, shall be provided with a coded system.

(2) Buildings not exceeding six stories in height, or having more than five thousand (5,000) square feet in area in any one story, shall be provided with a coded system or a non-coded system.

(b) The interior fire alarm system shall be installed in a workmanlike manner and in accordance with standard trade practices.

(c) The alarm system shall be so arranged and connected that the operation of any fire alarm station shall sound an alarm on the sounding devices simultaneously throughout the premises.

(d) Sending stations

(1) There shall be provided, on each story, and in the basement at least one fire alarm sending station located in a natural path of escape from fire at a readily accessible location designated by the Fire Chief and Commissioner, which always shall be kept unobstructed.

(2) Additional sending stations may be required where the travel distance from any one point, on the floor, exceeds one hundred and fifty (150) feet to the fire alarm station. (Not more than twenty (20) stations will be permitted on any one circuit or loop.)

(e) Sounding devices

(1) There shall be provided sufficient sounding devices, such as bells, gongs, horns, or whistles, so that the signals will be clearly audible to all the occupants of the building. In no case shall the sounding devices be less than two (2) in number.

(2) Not more than fourteen (14) direct, nor more than ten (10) alternating current gongs will be permitted on any one gong circuit.

(f) Control board

(1) There shall be provided in the basement pump room, engine room of janitors quarters, an approved control board designed to operate the alarm system.

(2) The control board shall be provided with an approved type trouble bell so connected that any disarrangement of the circuit wiring will sound a distinctive signal continually.

(g) Wiring

(1) All electric wiring for the interior fire alarm system shall be of copper, rubber insulated, protected by a braid, and be not less than number 14 Brown & Sharpe wire gauge. The wiring shall be protected from mechanical injury by standard weight, rigid iron conduit, properly bonded and grounded.

(2) The conduit shall be grounded to a water pipe by at least number 10 B. & S. gauge copper wire and approved copper ground clamps.

(h) Sources of electric energy

(1) The source of energy used to operate the interior fire alarm system shall be obtained from the public service companies' mains, and shall not exceed a potential of 240 volts, either alternating or direct current.

(2) When energy cannot be obtained from a central station power system, storage batteries in duplicate may be accepted when specifically approved by the Fire Chief and Commissioner.

(3) When energy is supplied by a central station power system, the fire alarm cutout shall be the first connection, and as near as possible to the electric meter registering current consumed by the hall lighting system.

(4) The fusible cutout shall be contained in a sealed or locked metal cabinet painted Fire Department red, and stenciled, "Interior Fire Alarm."

Not less than fifteen (15) ampere, enclosed type cartridge fuse will be accepted. Screw plug fuses are prohibited.

(i) Layout. Before the installation or extension of any fire alarm system, specifications thereof, showing complete details of the proposed installation shall be submitted by the owner or agent to the Fire Chief and Commissioner for examination and approval.

(j) Instruction cards

(1) There shall be provided an approved instruction card, properly marked, framed under glass and securely mounted at each fire alarm station.

(2) The location of the nearest street fire alarm box or the quarters of the nearest engine or truck company shall be shown on this card.

(k) Watchmen's time detector system

(1) There shall be provided an approved system of watchmen's time detectors to record the movements or patrol of the watchmen.

(2) The watchmen's time detector stations shall be so located that the watchman will be compelled to cover all public portions of the premises at least once every two hours to record complete round of signals upon the watchman's time detector clock.

* * *

(2) Former Fire Department Rule 3 RCNY §17-08

§17-08 Telegraphic Alarm Communications in Theaters, Opera Houses and Concert Halls

(a) By virtue of the authority vested in the Fire Commissioner under §15-127(b)(1) of the Administrative Code, telegraphic communication to the Fire Department shall be required from theaters, opera houses, concert halls and similar places of amusement if such occupancies are provided with a stage, scenery and dressing rooms, seating capacity exceeds 299 persons and live performances are presented. The telegraphic communication (alarm box) shall be tested daily and prior to each performance and maintained unobstructed and in proper working order at all times.

(b) Telegraphic alarm communications to the Fire Department shall not be required from motion picture theaters or common show motion picture theaters. A motion picture theater is a public hall or room in which motion pictures are displayed, in which the seating capacity does not exceed 600 persons and in which no stage or scenery is provided.

A common show motion picture theater is a theater, with or without stage, scenery and dressing rooms, in which the seating capacity exceeds 600 persons and motion pictures only are exhibited.

(c) A common show motion picture theater provided with stage, scenery and dressing rooms may periodically present live performances. In so doing, such occupancies convert to live performance theaters and as such, telegraphic communications to the Fire Department shall be required in accordance with subdivision (a) above, except that such telegraphic communications shall not be required if six or less live performances are presented annually and the following is complied with:

(1) Licensee shall notify the Bureau of Fire Prevention, in writing, at least five (5) days in advance of the time and dates of such live performances.

(2) A non-coin operated telephone without connection through any switchboard shall be installed backstage prior to any live performance. This telephone shall be for the exclusive purpose of transmitting a telephone alarm in the event of fire or other emergency. A card of instructions for reporting a fire or other emergency to the Fire Department shall be posted at the location of the

telephone. Such card shall be approved by the Bureau of Fire Prevention.

(3) Two (2) competent persons in the employ of the licensee shall be constantly available during the live performances to perform the following emergency duties:

(i) One (1) such person shall remain near the backstage telephone during the performance for the exclusive purpose of transmitting an alarm via the phone in the event of fire in the theater.

Such person shall not be required to perform any other duties during the live presentation.

(ii) The second person shall be assigned by the licensee as a "street box runner" who shall be familiar with the nearest city fire alarm box and how to operate same. He or she shall be required to perform no other duties during the live presentation than to transmit any necessary alarm from the street box.

(d) Any of the foregoing notwithstanding, theaters constructed in accordance with the provisions of the 1968 Building Code shall be provided with telegraphic alarm communications to the Fire Department, as required by the 1968 Building Code as follows:

(1) All occupancies classified by the Department of Buildings as F-1a occupancies, regardless of seating capacity.

F-1a occupancy is an occupancy in which persons assembled comprise a seated or otherwise passive audience to a performance or presentation and have their attention focused in a common direction and in which scenery and scenic elements are used. (§ 27-255) Typical occupancies are theaters, playhouses and opera houses (§ 27-239-Table 3-2). F-1a occupancies shall be provided with an emergency control panel located in stage area equipped with an alarm system and intercom system connected to manager's office, the dressing rooms, and to supervisory central fire station. (§ 27-546(b)(10)). Emergency control panel in F-la occupancies shall be manned in accordance with the requirements of the Fire Department. Since the fire control panel alarm system is

a required system, a person holding a Certificate of Fitness shall be required. (§§ 27-546(b)(1) and 27-4265(g)).

(2) All occupancies classified by the Department of Buildings as F-3 or F-4 occupancies, having stages with scenery or scenic elements, regardless of seating capacity.

F-3 occupancy is an occupancy in which persons assembled are physically active and do not have a common center of attention (§ 27-257). Typical occupancies are exhibition halls, galleries and museums. (§ 27-239-Table 3-2)

F-4 occupancy is an occupancy in which persons assemble for dancing, eating or for a combination of dancing, eating, drinking, or entertainment. (§ 27-258) Typical occupancies are night clubs, cabarets, dance halls and banquet halls. (§ 27-239-Table 3-2)

Section 27-549(a) of the Building (Administrative) Code provides that F-3 or F-4 occupancies having stages with scenery of scenic elements regardless of capacity shall comply with the provisions of the Building (Administrative) Code applicable to F-la occupancies. As indicated in subdivision (d)(1) above emergency control panels with an alarm system connected to a control station is required in F-la occupancies. A Certificate of Fitness is required for person manning such emergency control panel.

Note: Theater management shall be required to record Certificate of Fitness information in the Theater Inspection Log Book. See § 31-04 of these rules.

(e) When non-required telegraphic alarm communication systems are installed, such systems shall be maintained in proper working order or shall be removed from the premises.

* * *

(f) Watchman's Time Detector Systems and Watchman Service

(1) Former Fire Department Rule 3 RCNY §41-01

§ 41-01 Installation of Watchman's Time Detector Systems and

[Watchman] Night Watch Service

(a) [Watchman] Night watch. In every building used or occupied as a hotel, lodging house, public or private hospital or asylum there shall be employed by the owner or proprietor, or other person having the charge or management thereof, one or more [watchmen] night watch whose exclusive duty it shall be to visit every portion of such building at regular and frequent intervals, as hereafter provided under regulations established by the commissioner, for the purpose of detecting fire, or other danger, and giving timely warning thereof to the occupants of the building. There shall be provided a [watchman's] night watch clock or other device to be approved by the commissioner, by means of which the movements of the [watchman] night watch may be recorded. The commissioner may, however, in his or her discretion, accept an automatic fire alarm system in lieu of [watchmen] night watch and time detectors.

(b) Scope. This section shall apply to all hotels and lodging houses and single room occupancies as defined in the Multiple Dwelling Law, to all public and private hospitals and asylums having more than 15 rooms or accommodating more than 15 patients or inmates above the first or ground story, and to all Turkish or special treatment bath-houses where there are sleeping accommodations for more than 15 persons on the premises.

(c) [Watchman] Night watch service. [Watchman] Night watch service shall be performed every night. Patrol tours shall be made at least every two hours, beginning at 10 P.M. and continuing until the day staff of employees have assumed their duties. Persons employed as [watchmen] night watch shall be physically and mentally competent to perform required duties and shall not be assigned to any other work that will interfere or prevent them from making their proper tours. A proprietor, clerk or other employee may be permitted to serve as a [watchman] night watch in a lodging house, provided his or her duties are such as will not interfere with proper performance of tours.

(d) Time detectors, types.

(1) Central station system, approved by commissioner. Central station system shall consist of watch-boxes of approved type, used for no other purpose and located so watchman in making rounds must visit every portion of the building (see partial occupancy). Boxes shall be arranged so fire signals distinct from watch signals may be sent from each station

installed. Before acceptance of any system operating through a central station, the company furnishing such service shall file with the Bureau of Fire Prevention a general description of the apparatus it proposes to install, together with sample boxes and such detailed information and drawings necessary to the complete understanding of the operation of the system. Diagrams showing means of delivering signals to patrol and fire headquarters shall also be furnished.

(2) Local or private station system, approved by Commissioner. Local or private station system. Approved single station clocks or a portable [watchman's] night watch clock may be used to record the movements of [watchmen] the night watch. Single station clock for each station, or portable clock, shall be so located as to compel watchmen to visit every portion of the building in making tours. (See partial occupancy). Records shall be made by embossing or perforating paper dials which shall be clearly legible. Dials shall be of sufficient size so that time at which record is made can be accurately determined. Both single stations and portable clocks shall be made so that watch record dials cannot be seen without opening case, also the opening or closing of the case will make distinctive record on the dial of such action. Keys for portable clocks shall be of a type difficult to duplicate and shall be of a pattern susceptible to variations tending to reduce the probability that a set of keys fitted for one clock will operate other clocks. Key stations shall be fixed so that they cannot be removed without giving evidence of the fact.

(e) Numbering of stations. Stations shall be numbered in the order that the [watchman] night watch is required to make his or her patrol. The location number and order of stations shall be subject to the approval of the Bureau of Fire Prevention.

(f) Reports of [watchman] night watch service. Central station system companies shall furnish such daily reports to the Bureau of Fire Prevention as may be required, of all buildings equipped by them with time detectors. Where either single station clocks or portable watchmen's clocks are used, records shall be maintained for at least thirty (30) days which shall be subject to inspection by the fire department. The insertion and removal of record dials from the time clock, indicating the hours of [watchman] night watch patrol shall be performed by owner, proprietor or supervisor only. [Watchmen] Night watch shall not be permitted to perform this

function. Each dial shall be dated upon insertion and removal from the time clocks and initialled by person charged with this duty. Only one dial may be inserted in the clock at any one time.

(g) Exception. Where an automatic closed circuit, automatic thermostatic fire alarm system, or an automatic wet sprinkler system is installed to cover all portions of the building and are so arranged that the operation of either system will sound all of the gongs on the interior fire alarm system, a watchman's time detector system [of time detectors] shall not be required.

(h) Existing installations. Time detectors heretofore installed in compliance with orders of the commissioner may be accepted in lieu of the above requirements, provided they are properly maintained so as to render the service intended.

(i) Partial occupancy of building. Where any hotel, lodging house, hospital or asylum occupies only a portion of a building and such portion does not include all of the floors above and below ground levels, provisions shall be made whereby [watchmen] night watch shall cover all portions so occupied and, in addition, all portions which are at the same level above or below the floors occupied by the hotel, lodging house, hospital or asylum.

* * *

§ 4810-01 Means of Egress in Pre-Existing Facilities

(a) Scope. This section consolidates the *Fire Prevention Code* and former *rules* in effect on June 30, 2008, that are applicable to the design and installation of *means of egress* in *pre-existing facilities*.

(b) Definitions. Reserved

(c) General Provisions. *Pre-existing facilities* with *means of egress* the design and installation of which would not be allowed or approved under the Fire Code, but that, pursuant to FC102.3 and R102-01, may be continued with respect to such *means of egress* under the applicable laws, rules and regulations in effect prior to the Fire Code, shall continue to comply with the provisions of such laws, rules and regulations, including former Fire Department *rule* 3 RCNY 17-05, until such time as such *facilities* may be required to comply with the Fire Code and the *rules* with respect to the design and installation of such *means of egress*.

(d) Electro-Magnetic Door Holders

(1) Former Fire Department Rule 3 RCNY §17-05

§17-05 Voluntary Installation of Electro-Magnetic Door Holders

(a) Scope. To provide rules for the installation of electro-magnetic door holders or similar approved devices and to carry out the provisions of the Board of Standards and Appeals resolution as adopted under Cal. 109-63 S.A., printed in Bulletin No. 11, Vol. L, dated March 18, 1965.

(b) Definitions

Approved. "Approved" shall mean by the Board of Standards and Appeals and bearing the label indicating such approval.

Electro-Magnetic Door Holders. "Electro-magnetic door holders" are a hold-open device for swinging fire doors to be utilized with approved self-closing door closers and automatic detection, or sensing devices, and/or approved interior fire alarm system, whichever applies.

Voluntary Installations. "Voluntary installations" are installations which are not required by any law, regulations, or violation.

* * *

(d) Permissible installations

(1) Electro-magnetic door holders may only be installed for double swinging fire and smoke barrier doors installed by order of the Fire Department to sub-divide corridors for fire and smoke barriers.

(2) Where other doors are required to be closed, or to be self-closing by any provisions of the Administrative Code, the installation of such devices may only be made after the Board of Standards and Appeals has granted permission for specific locations.

(e) Electrical requirements

(1) The electro-magnetic device shall be so interconnected that the operation of the interior fire alarm system shall

de-energize the device thereby permitting the doors to close.

(2) The control system shall be of a closed circuit type.

(3) The control release panel which shall consist of relays, terminal plates, etc., of approved type mounted in an approved manner.

(4) A master relay shall be installed to lock the system in a non-operating condition until set manually.

(5) For every fifteen electro-magnetic door holders a separate contact or relay shall be installed.

(6) A trouble relay which will indicate any defects in the control system shall be provided. A trouble bell shall be installed which will indicate any defects and shall be actuated by the trouble relay. Such system shall be connected to the house side of the current transformer buss, through an approved cut-out without use of transformers, or rectifiers utilizing 120-208 volt service.

(7) A test means shall be provided to test the system and to operate the system manually.

(8) The equipment and installation shall be in conformance with interior fire alarm requirements and as stated in the Board of Standards and Appeals rules governing the installation of interior fire alarm systems (§ 811 of the B.S.A. rules).

* * *

§ 4811-4821 Reserved

§ 4822-01 Pre-Existing Motor Fuel-Dispensing Facilities and Repair Garages

(a) Scope. This section consolidates the *Fire Prevention Code* and Fire Department *rules* in effect on June 30, 2008, that are applicable to the design and installation of *pre-existing motor fuel-dispensing facilities* and *repair garages*.

(b) Definitions. Reserved

(c) Facilities in Compliance With Former Fire Department Rules in Effect on June 30, 2008. *Liquid motor fuel storage and dispensing facilities*, *marine liquid motor fuel-dispensing facilities*, *compressed natural gas motor fuel-dispensing facilities*, and *repair garages* in compliance with former Fire Department *rules* 3 RCNY §21-20, 21-21, 23-01, and/or 26-01, as applicable, in effect on June 30, 2008, are allowed and would be approved under the provisions of the Fire Code and the *rules*, and accordingly, such *facilities* shall be designed and installed in compliance with the requirements of FC Chapter 22 and the *rules*, except that where the distance of vent lines and fill and vapor recovery connections to lot lines in *pre-existing liquid motor fuel-dispensing facilities* and *marine motor fuel-dispensing facilities* is not in compliance with FC 3404.2.7.3.3 and 3404.2.7.5.2, compliance with such clearance distance requirements is not required until such time as such facilities are required to comply with the Fire Code and the *rules* with respect to such clearance distances.

(d) Pre-Existing Facilities. *Liquid motor fuel-dispensing facilities*, *marine fuel-dispensing facilities* and *CNG motor fuel-dispensing facilities* lawfully not in compliance with former Fire Department rules 3 RCNY §21-20, 21-21 and/or 23-01, as applicable, in effect on June 30, 2008, shall be designed and installed in compliance with applicable laws, rules and regulations, as set forth in R102-01(c)(3). Pre-existing firehouses with diesel motor fuel dispensing systems shall continue to comply with the requirements set forth in former Fire Department rule 3 RCNY §21-14 until such time as such *facilities* are required to comply with the Fire Code and the *rules* with respect to the design and installation of such motor fuel dispensing systems.

(e) Diesel Liquid Motor Fuel Dispensing Systems in Existing Firehouses

(1) Former Fire Department Rule 3 RCNY §21-14

§21-14 Installation of Diesel Fuel Storage Systems in Existing Firehouses

(a) Scope

(1) No person or agency shall install diesel fuel oil storage equipment for use in existing firehouses except as provided in these rules.

(2) These rules shall not apply to installations in other than existing firehouses.

(3) All installations made under these rules shall be made by a licensed installer.

(4) For the purpose of these rules the term "licensed installer" shall be interpreted to mean a person licensed to install

fuel oil systems or gasoline storage systems or a licensed plumber.

(b) General requirements

(1) Diesel storage systems for existing firehouses shall consist of two (2) tanks of 275 gallons capacity or one (1) tank of 550 gallons capacity. See subdivision (m) of this section for schematic drawing of installation.

(2) Two (2) tank systems shall be equipped with valves to permit each tank to be isolated from the other.

(3) All installations shall conform with the provisions of Article 17 of Subchapter 14 of Chapter 1 of Title 27 of the Administrative Code insofar as they apply to the installation of storage tanks except as hereinafter provided for.

(c) Oil permitted. Oil stored in storage systems installed under these rules shall be diesel fuel oil as defined in § 27-4002(10)(b) of the Administrative Code of the City of New York.

(d) Material and construction of tanks

(1) All tanks for the storage of diesel fuel oil shall be built of steel plates made by the open hearth or basic oxygen process. Such plates shall be free from physical imperfections, such as laminations, cracks, mill scale, etc. All steel must be new, in good condition and free from rust.

(2) All tanks shall be welded. Flanges or other pipe connections shall be sealed. Filler of any kind between plates is prohibited.

(3) Plate thickness

(i) Tanks of 275 gallons capacity shall have a minimum thickness of shell and head plate No. 10 manufacturer's standard gauge (.134") steel plate.

(ii) Tanks of 550 gallons capacity shall be subject to the following requirements:

(A) Tanks 36" in diameter and less-at least 1/4" shell and 1/4" heads.

(B) Tanks 37" to 72" in diameter-at least 1/4" shell and 5/16" heads.

(4) Tanks shall be cylindrical, oval, elongated oval or round and shall have dished heads with a curvature the radius of which is not greater than the diameter of the tank. Dished heads shall be formed with an adequate cylindrical extension rim to provide a welding surface.

(5) At time of installation all storage tanks shall bear a permanently fixed plate, spot-welded or equivalent, bearing the name of tank manufacturer, the gauge of material and capacity of tank. All shop fabricated storage tanks shall be installed without structural alteration.

(6) All openings shall be through the top of the storage tanks except that tanks shall be provided with a 1" capped opening in the bottom for cleaning and protection against corrosion.

(7) Tanks shall be painted with two (2) coats black asphaltum and stenciled with the lettering "Diesel Fuel Only." Letters to be white and 4" high.

(e) Location of tanks

(1) Storage tanks shall be installed in the cellar above ground. Bottom of tanks shall be 12" above slab mounted on substantial incombustible supports and located not less than seven feet (7') of clear unobstructed space measured horizontally from any furnace or source of exposed flame unless protected as provided in §§27-829(a)(2) or (3) of the Administrative Code and at least two feet (2') from any surface where the temperature exceeds 165 deg. F.

(2) Tanks shall be located as near as practicable below the location of the dispensing pump which shall be located on the apparatus floor.

(f) Piping

(1) Materials.

(i) All piping shall be new, standard, full-weight black steel, properly marked and duly approved.

(ii) Fittings shall be malleable iron.

(2) Installation

(i) Piping shall be run in a substantial and workmanlike manner. Exposed piping shall be protected against mechanical injury and shall be securely supported with rigid metal fasteners or hangers. Pitch shall be a minimum 1/2" per 10' to tanks.

(ii) Fill suction and vent line connections to tanks shall have swing joints.

(iii) All joints shall be made with Litharge and Glycerine or Board of Standards and Appeals approved pipe joint compound.

(3) Vent pipe

(i) An open vent of steel, without trap and draining to the tank, shall be provided for each storage tank. The lower end of the vent pipe shall not extend through the top of the storage tank more than one inch (1"). Cross connection between vent pipe and fill pipe is prohibited.

(ii) Vent pipes may not be run into a common header.

(iii) Vent pipes shall not be less than one and one-quarter inches (1 1/4") in diameter.

(iv) Vent pipes shall be provided with an approved weatherproof hood having a free area of not less than the pipe size area and shall terminate not less than two feet (2') nor more than twelve feet (12') above the fill pipe terminal. Vent pipe terminal shall be visible from location of the fill pipe terminal.

(v) Each tank shall be equipped with a "Scully Vent Alarm" or equal and shall be audible from the location of the fill pipe terminal.

(4) Fill pipe

(i) Fill pipe shall terminate outside the building. The fill pipe terminal shall be located on the building wall a minimum eighteen inches (18") and a maximum two feet (2') above grade and at least (2') from any building opening and five feet (5') from any subway grating at or below the level of the fill pipe terminal.

(ii) A common fill pipe and header shall be installed in two (2) tank systems. The area of a common header pipe shall be no smaller than the largest branch fill pipe.

Where a common fill pipe and header is installed, a shut-off valve shall be installed at each tank. Valve shall be sealed open. See §21-14(m) for schematic drawing of installation.

(iii) Fill pipe terminal shall be 2" or 3" left hand thread "Flagg Fill Pipe Terminal," Board of Standards and Appeals Calendar No.345-35-SA or approved equal. The outer flange of the fill pipe terminal or the seal cap shall be provided with letters reading "Diesel Oil" and the calendar number under which the fill pipe terminal and the seal cap have been approved. Where there is a storage system of a volatile flammable oil and/or a storage system for fuel oil and a storage system for diesel fuel oil is to be used in the same premises, the terminal of the diesel oil fill pipe shall be provided with a left hand thread and the fill pipe fitting shall be a different size than the fill pipe(s) for the volatile flammable oil system and/or the fuel oil system. In lieu of the foregoing fill boxes may be of a type approved by the Board of Standards and Appeals and shall have cast in its cover an identifying name or symbol to differentiate between fuel oil for heating and diesel oil as motor fuel.

(iv) A porcelain enameled metal sign with 2" lettering reading "Diesel Oil" shall be permanently attached two feet (2') above the fill box on an adjacent wall.

(v) Where the top of the storage tank is above the fill pipe terminal, the fill pipe shall have connected to the top of the tank and be provided with a shut-off valve and swing check valve which shall be located at the fill pipe terminal, or the shut-off valve may be located inside the building at or below the level of the fill pipe terminal, in an accessible location.

(5) Suction lines

(i) Suction lines shall be one and one-half inch (1 1/2") black steel.

(ii) Suction lines shall extend to within four inches (4") of the bottom of each tank.

(iii) In two (2) tank systems suction lines from each tank shall be run into a common header.

Where a common suction line and header is installed, a check valve and a shut-off valve shall be installed at each tank. See §21-14(m) for schematic drawing of installation.

(g) Valves and control of oil flow

(1) All valves shall be brass gate type suitable for use with oil.

(2) In a two (2) tank system, a shut-off valve shall be installed in the suction line and in the fill line to each tank. Valves shall be sealed open. See § 21-14(m) for schematic drawing of installation.

(3) A check valve shall be installed in the suction line to each tank. See §21-14(m) for schematic drawing of installation.

All check valves shall be angle check double poppet, similar to Buckeye No. 464 or approved equal.

(h) Oil level indicating devices and test wells

(1) Oil level indicating devices

(i) Individual approved direct reading liquid level gauges shall be mounted on each tank calibrated in gallons to the rated capacity of each tank.

(ii) Oil level indicating devices shall be constructed of substantial materials so designed that there can be no leakage of oil or oil vapor.

(2) Test wells shall not be permitted. Unused tank openings shall be permanently sealed to prevent removal of plugs or cover

(i) Dispensing pump.

(1) Specifications.

(i) Pump shall be electric, not-computer, explosion proof type, model #U535 of the A.O.Smith Corporation (Board of Standards and Appeals Calendar No. 483-55-SA) or approved equal. All parts of pumps coming in contact with liquid shall be either galvanized or brass.

(ii) Pump shall be equipped with a discharge register and fitted with a tumbler lock equipped with two (2) keys.

(iii) Pump shall be equipped with a filter having a replaceable element (WIX or equivalent), fifteen feet (15') of hose and an automatic shut-off nozzle. Hose and nozzle shall be of a type approved by the Board of Standards and Appeals for use in dispensing diesel fuel.

(iv) Pump shall be equipped with a crank for manual operation in case of power failure.

(v) Pump to have words "Diesel Fuel" stenciled across the front panel in white letters 1" high.

(2) Location.

(i) Pump shall be located on the apparatus floor in a location near apparatus doors and convenient for

supplying tanks of motor vehicles directly by means of dispensing hose.

(ii) Where practicable, pump shall be located above the storage tank which shall be located in the cellar.

(iii) Pump shall be mounted on a concrete pad 30" long by 18" wide by 12" high.

(j) Permits, plans and inspection of storage tanks and piping

(1) Permits. No diesel fuel oil storage system installed under these rules shall be operated until it is inspected and approved by a representative of the fire commissioner except that temporary operation shall be permitted upon the filing by the licensed installer of a certified statement that such equipment and the installation conforms with the plan for the installation and with applicable provisions of law.

(2) Plans

(i) Plans for the installation of diesel fuel oil storage tanks in existing firehouses shall be prepared by the Fire Department buildings unit and submitted to the Bureau of Fire Prevention for approval before installation of the system. All such plans shall show compliance with these rules.

(ii) Plans for the installation of diesel fuel storage tanks in existing firehouses being remodeled under a modernization program shall be prepared by the agency charged with the modernization and shall be submitted by such agency to the Bureau of Fire Prevention for approval before installation of the system. All such plans shall show compliance with these rules.

(k) Fire protection. Tanks, pumps and piping shall be maintained oil tight and kept clear at all times.

* * *

(m) Schematic drawings

(1) *Schematic drawing for two (2) 275 gallon tanks.*

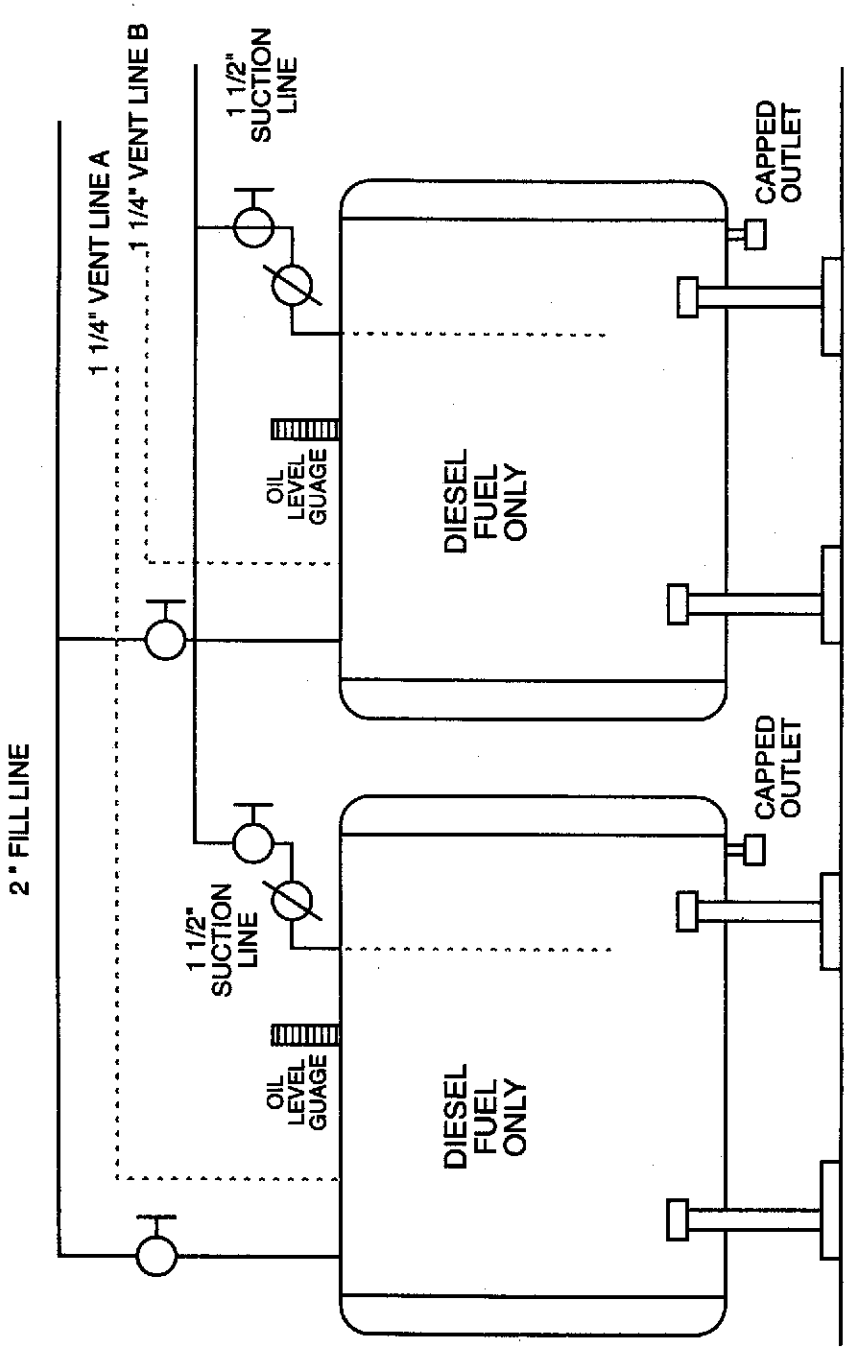

(2) *Schematic drawing for 550 gallon tank.*

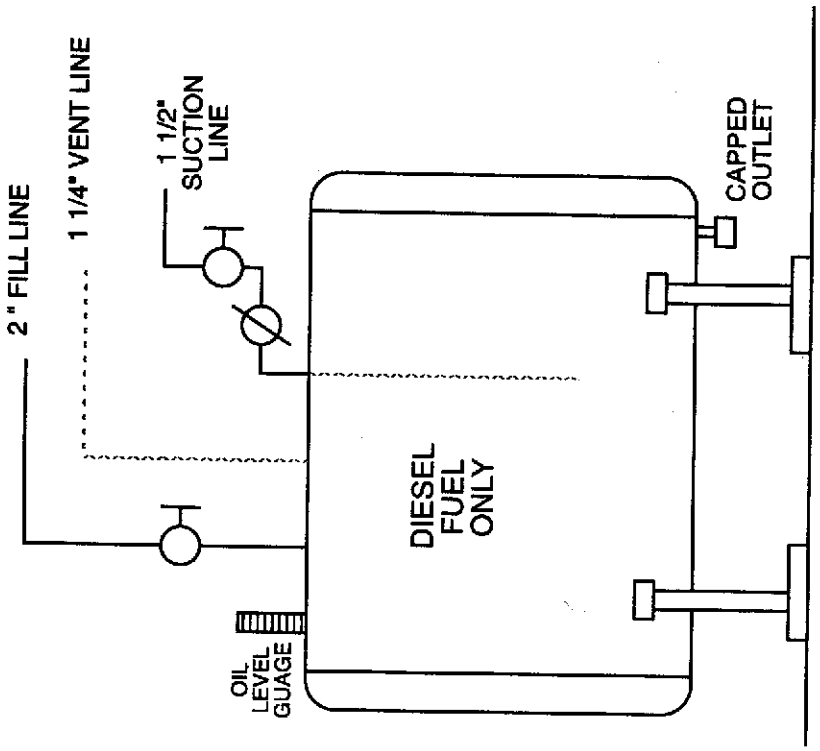

§ 4823-4826 Reserved

§ 4827-01 Storage of Hazardous Materials in Pre-Existing Facilities

(a) Scope. This section consolidates the New York City Fire Prevention Code and former Fire Department *rules* in effect on June 30, 2008, that are applicable to the design and installation of *hazardous material* installations in *pre-existing facilities*.

(b) Definitions. The following terms shall, for purposes of this section and as used elsewhere in Chapter 48 of the rules, have the meanings shown herein:

Retail drug store. A store or building used for the compounding and dispensing, usually in the form of physicians' prescriptions, or for the selling of small quantities of medicinal preparations, proprietary articles, drugs, chemicals, oils, volatile solvents and other substances which, alone or in combination with any other article or substance, are of a highly combustible, flammable or explosive nature. (Fire Prevention Code, former Administrative Code §27-4002(35))

Technical establishment. A building or place where explosive, flammable or highly combustible substances are produced, used or stored for use, or where chemicals or other materials entering into the production of such substances are stored or used, excepting those establishments which are specifically treated under other classifications in subchapters one through twenty-seven of this chapter. (Fire Prevention Code, former Administrative Code §27-4002(39))

Tenement house. A class A multiple dwelling as defined in subdivision four of section four of the multiple dwelling law. (Fire Prevention Code, former Administrative Code §27-4002(40))

(c) General Provisions. *Pre-existing facilities* with *hazardous material* installations the design and installation of which would not be allowed or approved under the Fire Code, but which, pursuant to FC102.3 and R102-01, may be continued with respect to such *hazardous material* installations under the applicable laws, rules and regulations in effect prior to the Fire Code, and shall continue to comply with the provisions of such laws, rules and regulations, including former Administrative Code §§27-4234, 27-4236, 27-4237, 27-4238, 27-4240, 27-4241, 27-4242 and 27-4246, and former Fire Department *rules* 3 RCNY §§10-01, 15-05 and 34-01, as applicable, until such time as such *facilities* may be required to comply with the Fire Code and the *rules* with respect to their design and installation.

(d) Technical Establishments

(1) Former Administrative Code §27-4234

§27-4234 Restrictions

It shall be unlawful to store for use, or to use in any technical establishment any liquid acetylene, acetylide of copper or other metallic acetylide; fulminate of mercury, or any other fulminate or fulminating compound; nitroglycerine; chloride of nitrogen; amide or amine; blasting powder; smokeless powder; or gunpowder in any form; or any volatile product of petroleum (except rhigoline) having a boiling point lower than sixty degrees Fahrenheit.

(e) Wholesale Drug Stores and Drug and Chemical Supply Houses

(1) Former Administrative Code §27-4237

§27-4237 Restrictions

No permit shall be issued for a wholesale drug store or drug and chemical supply house in any building:

1. Which is situated within fifty feet of the nearest wall of any building which is occupied as a school, hospital, theatre, or other place of public amusement or assembly;

2. Which is not equipped with a fire extinguishing system approved by the commissioner;

3. Where the building does not comply with the requirement of the building code regulating high hazard occupancies for buildings erected after the sixth day of December, nineteen hundred sixty-eight; or where a building or building section erected prior thereto is not fully equipped with an approved automatic sprinkler system.

(2) Former Administrative Code §27-4238

§27-4238 Laboratory

a. Construction. The operation of compounding medicinal preparations, proprietary articles and similar materials, or analyzing or testing drugs, chemicals, medicinal preparations, proprietary articles and similar materials, when explosive or flammable substances are required, shall be conducted only in a room or part of the premises designed and constructed in accordance with all applicable provisions of the building code.

* * *

(3) Former Administrative Code §27-4240

§27-4240 Prohibited materials

It shall be unlawful to manufacture or store in a wholesale drug store or drug and chemical supply house any of the following substances:

1. Acetylide of copper;

2. Amide or amine explosive;

3. Chloride of nitrogen;

4. Colored fire in any form;

5. Cymogene or any volatile product of petroleum (except rhigoline) or coal tar having a boiling point lower than sixty degrees Fahrenheit;

6. Flashlight powders;

7. Fulminate or any fulminating compound;

8. Guncotton;

9. Gunpowder in any form;

10. Liquid acetylene;

11. Nitro-glycerine, except in official U. S. pharmacopoeia solution, or in the form of pills, tablets, or granules containing not more than one-fiftieth of a grain each;

12. Picrates;

13. Potassium chlorate in admixture with organic substances or with phosphorus or sulphur; provided that this restriction shall not apply to the manufacture or storage of tablets of chlorate of potash intended for use solely for medicinal purposes;

14. Rubber shoddy.

(4) Former Administrative Code §27-4241

§27-4241 Quantities of supplies allowed

No permit shall be issued for the storage in a wholesale drug store or drug and chemical supply house of any of the following substances in quantities greater than those set forth in the following schedule:

1. Explosives.	
Amyl nitrate in bottles	25 pounds
Amyl nitrate in pearls	100 gross
Carbon bisulphide	50 pounds
Collodions	100 pounds in all
Gases, liquefied:	
Anhydrous ammonia	2 cylinders
Carbon dioxide	2 cylinders
Nitrous oxide	2 cylinders
Oxygen	2 cylinders
Sulphur dioxide	2 cylinders
Nitroglycerine, one percent solution in alcohol	20 pounds
Picric acid	25 pounds
Soluble cotton	25 pounds in all
2. Volatile flammable liquids (insoluble).	
Benzine, benzole or naphthas of any kind	150 gallons in all
Coal tar	1 barrel
Coal tar oils (heavy)	10 barrels
Crude petroleum	1 barrel
Ethyl chloride and other ethers	200 pounds in all
Ether, nitrous	100 pounds in five pound packages or less
Ether, sulphuric	500 pounds
Rhigoline	2 dozen one pound tins
Varnishes, lacquers, etc.	275 gallons in all
Wood creosote	5 barrels
3. Volatile flammable liquids (soluble).	
Acetone	1 barrel
Alcohol, denatured	10 barrels
Alcohol, ethyl	10 barrels
Alcohol, methyl	10 barrels
Aldehyde, ethyl	5 gallons
4. Non-volatile flammable liquids (insoluble).	
Amyl acetate	10 barrels
Amyl alcohol	10 barrels
Aniline oil	5 drums

Cumol	5 barrels
Essential oils	10,000 pounds in all
Kerosene	1 barrel
Nitrobenzole	5 drums
Terebene	100 pounds
Toluol	350 pounds
Turpentine	10 barrels
Xylol	100 pounds

5. Non-volatile flammable liquids (soluble).

Glycerine	5,000 pounds

6. Combustible solids.

Metallic magnesium	100 pounds
Phosphorus	11 pounds
Phosphorus, red	11 pounds
Sulphur	25 barrels in all

7. Gums, resins, pitch, etc.

Burgundy pitch	5,000 pounds
Camphor	8,000 pounds
Gum thus	5 barrels
Naphthaline	50 barrels in all
Pitch (coal tar pitch)	2 barrels
Resins, balsams and other varnish gums	8,000 pounds in all
Rosin	5 barrels
Shellac	2,500 pounds
Stockholm tar	1,000 pounds
Tar, refined (wood)	10 barrels
Venice turpentine	2,000 pounds

8. Combustible fibres and powders (vegetable).

Cotton, absorbent	2,000 pounds
Cotton batting	10 bales
Excelsior	25 bales
Flax	20 bales
Jute	25 bales
Lampblack	10 barrels
Lycopodium	2,000 pounds
Oakum	2 bales
Pulverized charcoal	10 barrels
Sawdust	15 bags
Straw, packing	10 bales

9. Dangerously corrosive acids.

Anhydrous acetic	500 pounds

Carbolic	15,000 pounds
Glacial acetic	2,000 pounds
Hydrochloric	15 carboys
Hydrofluoric	500 pounds
Sulphuric	15 carboys

10. Acids.

Chromic	100 pounds
Iodic	5 pounds
Nitric	3 carboys
Nitric, fuming	25 pounds
Periodic	2 pounds

11. Peroxides.

Barium	2 casks
Calcium	100 pounds
Hydrogen, U.S.P.	5,000 pounds
Other hydrogen peroxides, over three percent, not to exceed fifteen percent	500 pounds
Potassium	10 pounds
Sodium	25 pounds

12. Chlorates.

Barium	500 pounds
Other metallic	100 pounds in all
Potassium	1,000 pounds
Sodium	1,000 pounds

13. Perchlorates.

Potassium	10 pounds
Other metallic perchlorates	10 pounds in all

14. Permanganates.

Potassium	1,000 pounds
Sodium	100 pounds
Other metallic permanganates	100 pounds in all

15. Nitrates.

Barium	1,200 pounds
Bismuth subnitrate	2,500 pounds
Cobalt	1,000 pounds
Copper	100 pounds
Iron, ferric	200 pounds
Mercury (mercuric)	100 pounds
Mercury (mercurous)	10 pounds
Potassium	2,000 pounds

Silver	50 pounds
Sodium	1,000 pounds
Strontium	1,200 pounds
Other metallic	500 pounds in all

16. Metallic oxides.

Lead binoxide	25 pounds
Lead (litharge)	1,200 pounds
Lead (red)	500 pounds
Mercury; yellow precipitate (mercurous)	200 pounds
Mercury; red precipitate (mercuric)	100 pounds
Silver	10 pounds

17. Substances made dangerous by contact with other substances.

Calcium carbide	60 pounds
Metallic potassium	5 pounds
Metallic sodium	5 pounds
All other metals of the alkalies or alkalone earths	5 pounds in all
Phosphides	10 pounds
Unslaked lime	2 barrels
Zinc dust	100 pounds

The commissioner may, in his or her discretion and when no unusual hazard is presented thereby, authorize the storage of greater quantities than those set forth in the foregoing schedule, or the storage of other substances not specified therein.

(5) Former Administrative Code §27-4242

§27-4242 Storage

* * *

b. Liquids. The storage of acids or liquid chemicals which may cause explosions or combustion by flowing into, upon or among chemicals or other substances, shall be provided with safety catch basins or a similar device, so that, in case of the leakage of such acids or liquids, no danger to life or property will result. Carboys containing nitric acid shall be stored only in premises designed and constructed in accordance with all applicable provisions of the building code; and it shall be unlawful to permit sawdust, hay, excelsior, or any organic substance, or other acids or chemicals in close proximity to such carboys or stocks of nitric acid. A sufficient quantity of sand or infusorial earth shall be provided for absorbing all waste liquids from floors.

* * *

(6) Former Fire Department Rule 3 RCNY §15-05

§15-05 Fire Protection in Wholesale Drug and Chemical Supply Houses

The following shall be deemed to be in compliance with § 27-4237(3) of the Administrative Code of the City of New York:

* * *

(d) Where such storage does not exceed 75 percent of the quantities allowed in § 27-4241, Administrative Code.

For each 2,500 square feet of floor area or major portion thereof:

* * *

Thermostatic alarm

(e) Where the storage exceeds 75 percent of the allowable quantity, an automatic sprinkler system is required.

(f) When the building exceeds four stories, an automatic sprinkler system is required.

(g) In any building where explosives and flammable substances are used or handled, if the area exceeds 5,000 square feet per floor an automatic sprinkler system is required.

(h) In any building exceeding 10,000 square feet per floor, an automatic sprinkler system is required.

(f) Retail Drug Stores

(1) Former Administrative Code §27-4246

§27-4246 Quantities of supplies allowed

It shall be unlawful to store, sell or use in a retail drug store any of the following substances in quantities greater than those set forth in the following schedule:

1. Acids.

Carbolic	100 pounds
Hydrochloric	200 pounds

Nitric	15 pounds
Picric	1 ounce
Sulphuric	200 pounds

2. Volatile flammable liquids.

Acetone	5 pounds
Amyl acetate	1 gallon
Amyl alcohol	1 gallon
Amyl nitrate	2 ounces in one ounce bottles six dozen pearls
Ethyl alcohol	1 barrel
Benzine, benzole and naphtha of any kind	5 gallons in four ounce bottles or pint tins
Carbon bisulphide	3 pounds
Collodion	5 pounds
Denatured alcohol	1 barrel
Ether, sulphuric	5 pounds
Methyl alcohol	1 barrel
Other ethers, in all	2 pounds
Turpentine	1 barrel

3. Flammable liquids.

Essential oils	100 pounds in all
Glycerine	500 pounds
Pine tar	10 pounds

4. Combustible solids.

Aluminum (powder)	1 pound
Balsams and resins	50 pounds in all
Camphor	350 pounds
Charcoal, powdered	10 pounds
Lampblack	10 pounds
Magnesium (powder)	8 ounces
Magnesium (ribbon)	8 ounces
Naphthalene	4 barrels
Phosphorus, red	2 ounces
Phosphorus, yellow	1 ounce
Rosin	10 pounds
Sulphur and brimstone	250 pounds in all

5. Combustible fibres.

Cotton, absorbent	150 pounds in cartons
Cotton, batts	10 pounds in closed boxes or other containers
Cotton, loose	5 pounds in closed boxes or

	other containers
Excelsior, hay and straw	2 bales (except in stores located in tenement houses)
Lint	10 pounds in closed boxes or other containers
Oakum	10 pounds in closed boxes or other containers

6. Oxidizers.

Barium peroxide	1 pound
Bismuth subnitrate	20 pounds
Calcium peroxide	5 pounds
Chromic acid	1 pound
Lead oxide (red)	5 pounds
Lime, unslaked	200 pounds in sealed metal cans
All other metallic bichromates or chromates	50 pounds in all
Mercuric oxide (red)	2 pounds
Mercurous oxide	2 pounds
Mercury nitrate	1 pound
Phosphides	10 ounces in all
Potassium bichromate	10 pounds
Potassium chlorate	25 pounds in five pound containers or less
Potassium nitrate	50 pounds
Potassium perchlorate	1 ounce
Potassium permanganate	5 pounds
Silver nitrate	1 pound
Silver oxide	1 ounce
Sodium bichromate	10 pounds
Sodium chlorate	5 pounds
Sodium nitrate	25 pounds
Sodium permanganate	1 pound

The commissioner may, in his or her discretion, when no extra hazard is permitted thereby, authorize the storage of larger quantities of substances than those set forth in the foregoing schedule, or of other explosives or flammable substances not specifically named therein.

(g) Non-Production Chemical Laboratories

(1) Former Fire Department Rule 3 RCNY §10-01

§10-01 Storage and Use of Chemicals, Acids and Gases in College, University, Hospital, Research and Commercial Laboratories

(a) Definitions.

* * *

Laboratory. Laboratory means a generic term denoting a building, space, equipment or operation, wherein testing, research or experimental work is conducted and shall include laboratories used for instructional purposes.

Laboratory Building. Laboratory building means a structure consisting wholly or principally of one or more laboratory units.

Laboratory Unit. Laboratory unit means an enclosed, fire rated space used for testing, research, experimental or educational purposes. Laboratory units may or may not include offices, lavoratories, and other contiguous rooms maintained for, or used by, laboratory personnel, and corridors within the units. It may contain one or more separate laboratory work areas.

Laboratory Work Area. Laboratory work area means a room or space within a laboratory unit for testing, analysis, research, instruction, or similar activities which involve the use of chemicals or gases. A work area may or may not be enclosed.

Exception: This section shall not apply to physical, electronic, instrument or similar laboratories which use small quantities (less than 32 oz. flammable liquids, 0.5 lb. oxidizing materials, and 0.15 cu.ft. water container capacity of flammable gases) for incidental purposes such as cleaning, maintenance or repair and these substances are not used directly in experimental chemical research work.

* * *

Storage Cabinet. Storage cabinet means a cabinet for the storage of not more than 60 gallons of flammable liquid which is designed and constructed in accordance with "OSHA General Industry Standards-Flammable and Combustible Liquids".

Storage Room. Storage room means a room where chemicals or gases regulated by this directive are stored and not otherwise used or reacted.

Unstable (Reactive) Chemical. Unstable (reactive) chemical means a substance, other than one classified as an explosive or

blasting agent, which will vigorously and energetically react, is potentially explosive, will polymerize or decompose instantaneously, undergo uncontrollable auto-reaction or can be exploded by heat, shock, pressure or combinations thereof. Examples are: organic peroxides, nitromethane, and ammonium nitrate.

* * *

(d) Storage.

(1) Storage of chemicals for use in individual laboratory units shall be in accordance with Table I below. Any amounts in addition to the maxima set forth in Table I below shall be at the discretion of the Commissioner and shall be in storage cabinets.

(2) Determination of the fire rating of laboratory unit enclosures shall be in accordance with the criteria of the Building Code, except that, in partitions not required to have a fire rating under the provisions of that Code, fire dampers shall not be required to be installed in existing ducts penetrating existing laboratory partitions.

(3) Storage of volatile flammable oils shall be in accordance with Table I of this section.

Table I
Maximum Laboratory Unit Storage Limits

Lab Type	Fire Rating	Fire Protection	Flammable Liquids and	Flammable Solids	Oxidizing Materials	Unstable Reactive
I	2 Hours	Sprinklers	30 gals	15 lbs	50 lbs	12 lbs
II	1 Hour	Sprinklers	25 gals	10 lbs	40 lbs	6 lbs
III	2 Hours	No Sprinklers	20 gals	6 lbs	30 lbs	3 lbs
IV	1 Hour	No Sprinklers	15 gals	3 lbs	20 lbs	2lbs

* * *

(5) Storage and use of flammable gases within laboratory units shall be in accordance with Table II below, except that no storage of flammable gases shall be allowed in

any laboratory unit where there is not an on-going operation requiring their use. On-going operations shall allow storage of flammable gases sufficient to meet the operating requirements of the equipment in that laboratory unit plus an equal reserve.

Table II
Storage of Flammable Gases

Area of Laboratory in square feet**	Up to 500 sq. ft.	per additional 100 sq. ft.	Maximum per Laboratory Unit
Maximum Capacity	9.24	1.54	15.4

** Water container capacity

* * *

(9) Storage rooms shall be of a minimum 2 hour rated construction and shall be provided with:

(i) a constant mechanical exhaust system to the exterior capable of providing at least six changes of air per hour;

(ii) a sill at the doorway (except that no sill shall be required at doorways of flammable gas storage rooms);

(iii) a sprinkler system providing at least one head per 90 sq. ft.

* * *

(13) All fixed electrical equipment within cold rooms where flammable liquids or flammable gases are used shall be explosion proof in accordance with subdivision (f)(3) of this section. Cold rooms shall not be used for storage of principal stock of flammable gases or flammable liquids.

(e) Signs and warning placards.

(1) A sign prohibiting smoking shall be conspicuously posted at the exterior of entrances to storage and laboratory areas and within such areas.

(2) Signs with RED letters of minimum size two inches high by three-eighths inch stroke on a contrasting background shall be posted at entrances to areas:

(i) Where materials which react with water are stored or used.

(ii) Where flammable gases or explosives are stored or used.

(3) Warning placards in conformance with Federal, State and Local regulations shall be posted at entrances to areas:

(i) Where radioactive material is stored or used;

(ii) Where biohazardous material is stored or used;

(iii) Where poisonous gases are stored or used.

(4) The outside of each chemical laboratory unit door shall have a sign, as detailed below, or metal or other durable material, with RED letters on a white background which shall be located in the area of the mid-point of the height of the door.

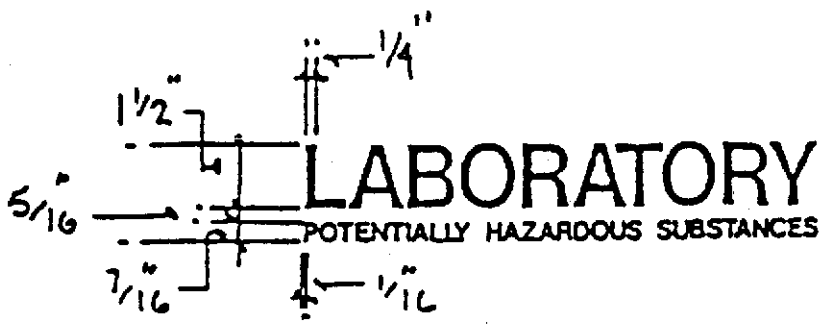

(f) Fire prevention and protection.

(1) In laboratories and storage rooms which are sprinkled, the protection area per sprinkler head shall not exceed 90 sq. ft., except that the protection area per sprinkler head shall not exceed 100 sq. ft. where the system is hydraulically designed.

(2) In existing buildings, water supply to sprinkler systems may be taken off existing standpipes provided that the system is hydraulically designed.

(3) All electrical equipment in all flammable liquid and all flammable gas storage rooms shall conform with the requirements of the New York City Electrical Code set forth in §27-3198(4), Administrative Code, irrespective of whether such room would be classified as a Class I Location by §27-3197(1) of such code.

(4) Laboratory units and laboratory work areas shall be considered as unclassified electrically with respect to §27-3197 of the Administrative Code.

(5) Fume hoods shall be provided and utilized in conformance with these requirements and those of such other agencies as have jurisdiction over operations and special storage conditions which give off noxious odors or flammable or poisonous vapors, or radioactive materials.

(6) Fume hoods shall be so vented that a minimum average face velocity of 100 feet per minute, with minimum face velocity at any point not less than 75 feet per minute, is provided.

(7) Fume hoods shall be located away from doors, windows that may be opened, principal traffic lanes or room air outlets or returns which may cause drafts sufficient to interfere with exhaust operations of fume hoods.

(8) Every fume hood used for handling perchloric acids, strong oxidizing agents or highly reactive chemicals shall be served by an independent duct.

(9) Common ducts may be permitted for fume hoods in the same laboratory unit. Hoods in different laboratory units shall not have their ducts combined. Hoods in common ducts must be so arranged or equipped that exhaust from one duct cannot be forced out through any other hood served by the common duct.

(10) Exhaust ducts shall have the minimum number of turns, bends or obstructions as is practical, <u>and</u> shall have adequate air movement in the duct for the number of

hoods vented by that duct and sufficient to prevent any back up into the hood.

(11) Washdown provisions shall be provided for hoods and ducts in which perchloric acid is heated above ambient temperature and in which vapors are not trapped or scrubbed before entering the hood exhaust system.

(12) Exhaust fans for ducts shall, wherever possible, be located outside the building and as close as possible to the terminal so that negative pressure is maintained in ducts within the building.

(13) A system of explosion hazard control consisting of explosion prevention, explosion suppression, explosion venting, area ventilation, extinguishment system(s), barrier protection, separation and isolation, remove controlled apparatus or any combination thereof, shall be provided in laboratories or storage rooms where any of the following conditions occur:

(i) Storage of materials which in themselves are readily capable of detonation or of an explosive decomposition or explosive reaction at normal ambient temperature and pressure.

(ii) Use of materials which explode, violently decompose or produce rapid increases in pressure and temperature upon:

(A) Vacuum distillation;

(B) Being subjected to slight or moderate shock;

(C) Exposure to ultraviolet or visible light;

(D) Exposure to pressure or more than one atmosphere;

(E) Exposure to temperature in excess of 122(degrees)F. or 50(degrees)C.;

(F) Exposure to air;

(G) Increase in the concentration above which the substance is not longer stable;

(H) Standing (i.e. spontaneously).

(iii) Highly exothermic reactions which also involve rapid increases in pressure, such as certain polymerizations, oxidations, nitrations, peroxidations, hydrations, or organometallic reactions.

(iv) Use or formation of materials whose chemical structure or functional group indicate potential hazard, but whose properties have not been established. Examples would be triple bonds, epoxy radicals, nitro and [nitroso] <u>nitrous</u> compounds, and peroxides.

(14) The commissioner shall evaluate the method of explosion hazard control, on an individual basis, considering in each instance the following criteria:

(i) The nature and quantity of the constituent material(s);

(ii) The nature of the process;

(iii) The potential energy release;

(iv) Isolation of the equipment;

(v) The particular physical location and exposures.

* * *

(2) Former Fire Department Rule 3 RCNY §34-01

§34-01 Storage and Use of Limited Quantities of Chemicals, Acids, and Flammables for Instruction Purposes in [Public High] Schools <u>Through the Twelfth Grade</u>

(a) No liquefied chlorine may be stored in any school.

(b) No more than five (5) gallons of volatile flammable oils derived from petroleum, shale oil or coal tar should be stored at any one time.

(c) No more than twenty-five (25) pounds of potassium and/or sodium chlorate is permitted to be stored.

(d) No chemicals or substances as listed under §§27-4240 and 27-4234 of the Administrative Code should be stored in a school.

* * *

(i) The storage of dangerous chemicals, volatile flammable oils and liquids shall be confined to metal cabinets vented at top and bottom. A cardholder should be provided for a visible record of the contents and maximum amount stored therein; also, a caution sign, if applicable to read: "In case of fire do not use water."

* * *

Note: The foregoing rules shall be the basis for the issuance of Fire Department permits to schools throughout the City of New York.

(l) Listed below are the maximum quantities of combustibles and dangerous chemicals which may be stored in [public high] schools through the twelfth grade:

Explosives	
Picric acid	1 lb.
Carbon bisulphide	10 lbs.
Carbon Dioxide	1 lb.
Anhydrous Ammonia	1 lb.
Sulphur Dioxide	1 lb.
Nitrous Oxide	1 lb.
Oxygen	1 lb.
Volatile Flammable Liquids (Insoluble)	
Crude Petroleum	2 lbs.
Benzine, Benola or Naphthas of any kind	2 lbs.
Ether, Sulphuric	10 lbs.
Varnishes, Lacquers, etc.	2 lbs.
Volatile Flammable Liquids (Soluble)	
Acetone	1 lb.
Alcohol, Denatured	5 gals.
Aylcohol. Methyl	5 gals.
Non-Volatile Flammable Liquids (Insoluble)	
Amyl Acetate	2 lbs.

Amyl Alcohol	2 lbs.
Aniline Oil	1 lb.
Non-Volatile Flammable Liquids (Insoluble)	
Kerosene	2 lbs.
Turpentine	½ gal.
Tuluol	1 gal.
Xylol	1 gal.
Essential Oils	2 lbs.
Non-Volatile Flammable Liquids (Soluble)	
Glycerine	5 lbs.
Combustible Solids	
Phospherous	¼ lb.
Phospherous, Red	5 lbs.
Sulphur	15 lbs.
Metallic Magnesium	1 lb.
Gums, Resins. Pitch, Etc.	
Camphor	1 lb.
Resin	11 lbs.
Venice Turpentine	1 lb.
Naphthaline	1 lb.
Shellac	1 lb.
Combustible Fibres and Powders (Vegetable)	
Pulverized Charcoal	5 lbs.
Cotton, Absorbent	5 lbs.
Lampblack	2 lbs.
Lycopodium	1 lb.
Dangerously Corrosive Acids	
Glacial Acetic Acid	5 gals.
Hydrofluoric Acid	1 lb.
Hydrochloric Acid	12 gals.
Sulphuric Acid	12 gals.
Carbolic Acid	1 lb.
Acids	
Acid, Chromic	1 lb.
Acid, Nitric	12 gals.
Peroxides	
Hydrogen Peroxide, U.S.P.	0 lbs.

Sodium Peroxide	2 lbs.
Barium Peroxide	2 lbs.
Other Hydrogen Peroxides over 3 percent, not to exceed 15 percent	5 lbs.
Chlorates	
Potassium Chlorate	15 lbs.
Permanganates	
Potassium Permanganates	1 lb
Nitrates	
Barium Nitrate	1 lb.
Stontium Nitrate	1 lb.
Cobalt Nitrate	1 lb.
Copper Nitrate	1 lb.
Iron Nitrate, Ferric Mercury Nitrate (mercuric)	1 lb.
Mercury Nitrate (mercurous)	1 lb.
Potassium Nitrate	10 lbs.
Silver Nitrate	5 lbs.
Sodium Nitrate	15 lbs.
Other Metallic Nitrates	5 lbs.
Metallic Oxides	
Lead Oxide (red)	5 lbs.
Lead Oxide (Litharge)	10 lbs.
Oxide of Mercury red precipitate (mercuric)	10 lbs.
Oxide of Mercury; yellow precipitate (mercurous)	5 lbs.
Substances Made Dangerous by Contact with Other Substances	
Calcium Carbide	5 lbs.
Metallic Potassium	½ lb.
All other Metals of the Alkalies or Alkaline Earths	2 lbs.
Metallic Sodium	½ lb.
Zinc Dust	5 lbs.
Slaked Lime	25 lbs.

§ 4828-01 Storage of Aerosols in Pre-Existing Facilities

(a) Scope. This section consolidates the New York City Fire Prevention Code and former Fire Department *rules* in effect on June 30, 2008, that are applicable to the design and installation of aerosol storage in *pre-existing facilities*.

(b) Definitions. The following terms shall, for purposes of this section and as used elsewhere in Chapter 48 of the rules, have the meanings shown herein:

Combustible pressurized product. A pressurized product that has a flashpoint at or above 100 degrees Fahrenheit and below 300 degrees Fahrenheit, or where a flame projection exceeds three (3) inches but not more than eighteen (18) inches at full valve opening when tested by a method described in the regulations of the United States Department of Transportation, as set forth in Title 49, Part 173 of the Code of Federal Regulations. (Former Fire Department rule 3 RCNY 32-01(b))

Extremely flammable pressurized product. A pressurized product that has a flashpoint below 20 degrees Fahrenheit and where a flashback (a flame extending back to the dispenser) is obtained at any degree of the valve opening when tested by a method described in the regulations of the United States Consumer Product Safety Commission, as set forth in Title 16, Part 1500 of the Code of Federal Regulations. (Former Fire Department rule 3 RCNY 32-01(b))

Flammable pressurized product. A pressurized product that has a flashpoint at or above 20 degrees Fahrenheit and below 100 degrees Fahrenheit, or where a flame projection exceeds eighteen (18) inches at full valve opening or a flashback (a flame extending back to the dispenser) is obtained at any degree of valve opening when tested by a method described in the regulations of the United States Consumer Product Safety Commission, as set forth in Title 16, Part 1500, of the Code of Federal Regulations, or the regulations of the United States Department of Transportation, as set forth in Title 49, Part 173 of the Code of Federal Regulations. (Former Fire Department rule 3 RCNY 32-01(b))

Pressurized product. The product in a pressurized container with a propellant that causes the product to be expelled from the container through a valve. This term includes all such products, irrespective of the ingredients of the product, the type of propellant, or form in which the product is dispensed. (Former Fire Department rule 3 RCNY 32-01(b))

(c) General Provisions. *Pre-existing facilities* with aerosol storage the design and installation of which would not be allowed or approved under the Fire Code, but which, pursuant to FC102.3 and R102-01, may be continued with respect to such aerosol storage under the applicable laws, rules and regulations in effect prior to the Fire Code, shall continue to comply with the provisions of such laws, rules and regulations, including former Fire Department *rule* 3 RCNY §32-01, until such time as such *facilities* may be required to comply with the Fire Code and the *rules* with respect to their design and installation.

(d) Pressurized Products

(1) Former Fire Department Rule 3 RCNY §32-01

§32-01 Manufacture, Storage and Use of Pressurized Products

* * *

(e) Storage and use requirements.

* * *

(2) Combustible, flammable or extremely flammable pressurized products in quantities exceeding the following amounts shall comply with the following additional storage requirements:

(i) Combustible, flammable or extremely flammable pressurized products in quantities exceeding a total of fifty (50) gallons but not more than a total of two hundred (200) gallons shall be stored in an area protected by an automatic fire sprinkler system, an area having natural ventilation, or an area which is vented to the outdoors by a duct having a cross-section of at least eight (8) inches.

(ii) Combustible, flammable or extremely flammable pressurized products in quantities exceeding a total of two hundred (200) gallons shall be stored as follows:

(A) in non-combustible (fireproof) buildings, in a fireproof storage room, unless the building is equipped with an automatic fire sprinkler system or other fire extinguishing system approved by the Department;

(B) in combustible (non-fireproof) buildings, in a fire-resistive storage room that is vented to the outdoors and that is equipped with an automatic fire sprinkler system or other extinguishing system approved by the Department.

* * *

§ 4829-01 Storage of Combustible Fibers in Pre-Existing Facilities

(a) Scope. This section consolidates the New York City Fire Prevention Code and former Fire Department *rules* in effect on June 30, 2008, that are applicable to the design and installation of *combustible fiber* storage in *pre-existing facilities*.

(b) Definitions. Reserved

(c) Facilities in Compliance With Former Fire Department Rules in Effect on June 30, 2008

(1) Combustible fiber storage on waterfront structures. *Combustible fiber* storage on waterfront structures in compliance with former Fire Department *rule* 3 RCNY §30-01 in effect on June 30, 2008, is allowed and would be approved under the provisions of the Fire Code and the *rules*, and accordingly, such *facilities* shall be designed and installed in compliance with the requirements of FC2906.

§ 4830-01 Storage of Compressed Gases in Pre-Existing Facilities

(a) Scope. This section consolidates the *Fire Prevention Code* and former Fire Department *rules* in effect on June 30, 2008, that are applicable to the design and installation of *compressed gas* installations in *pre-existing facilities*.

(b) Definitions. Reserved

(c) General Provisions. *Pre-existing facilities* with *compressed gas* installations the design and installation of which would not be allowed or approved under the Fire Code, but that, pursuant to FC102.3 and R102-01, may be continued with respect to such *compressed gas* installations under the applicable laws, rules and regulations in effect prior to the Fire Code, shall continue to comply with the provisions of such laws, rules and regulations, including former Fire Department *rules* 3 RCNY 12-03, 23-10, 23-06 and 23-07, as applicable, until such time as such *facilities* may be required to comply with the Fire Code and the *rules* with respect to such *compressed gas* installations.

(d) Medical Gases

(1) Former Fire Department Rule 3 RCNY §12-03

§12-03 Storage of Oxygen Cylinders for Use in Institutional Occupancies

* * *

(c) Storage of oxygen cylinders

(1) When outdoor storage or a separate storage building is not feasible, oxygen cylinders shall be stored in an approved storage room.

(i) The storage room shall conform to the Building Code, but shall have a fire resistive rating of at least one (1) hour.

(ii) Storage room shall be provided with natural outside ventilation consisting of an open louvre having an area equivalent to at least one percent of the storage room area, or, in lieu thereof an adequate mechanical exhaust system shall be provided. Control for mechanical exhaust system to be located outside of the storage room. Ventilation shall conform to the Building Cede, but shall not be less than the foregoing requirements.

(iii) Storage room to have fireproof door without louvres.

(iv) A sign shall be provided on the outside of the door to the storage room reading:

OXYGEN STORAGE
NO SMOKING-NO OPEN FLAMES

[lettering] Lettering shall not be less than two (2) inches in height and shall be either RED ON A WHITE or WHITE ON A RED background.

(v) All electric lights, switches, relays and other electrical equipment shall be vapor proof design if such equipment is located in the storage room.

(vi) Oxygen Storage Rooms shall not communicate directly with anesthetizing locations or storage locations for combustible or flammable anesthetic agents.

(2) Liquid oxygen cylinders may be stored only on special permit of the Fire Commissioner under such conditions as he or she deems necessary.

(3) When outdoor storage is utilized for oxygen cylinders: Cylinders shall be protected against extremes of weather, and from the ground beneath to prevent rusting.

(i) During winter, cylinders shall be protected against accumulation of ice and snow.

(ii) During summer, cylinders shall be screened against the continuous direct rays of the sun.

(d) General storage rules

(1) Oxygen cylinders shall not be stored with flammable gases, oils, grease, etc.

(2) Cylinders to be properly secured to prevent damage and away from sources of heat.

(3) An oxygen cylinder for immediate and emergency use may be kept on each floor in a cabinet, closet or room. (This is in addition to cylinders in actual use.)

* * *

(6) No recharging of cylinders to be conducted on premises.

* * *

(2) Former Fire Department Rule 3 RCNY §23-10

§23-10 Design, Construction and Erection of Central Oxygen and Nitrous Oxide Piping Systems in Hospitals

(a) Scope. This section applies only to installations made prior to the Department of Buildings taking jurisdiction on December 6, 1968 over these type installations as specified in Section P114.12 of Reference Standard 16.

(b) General

(1) Piping systems herein described must not be used for the distribution of combustible anesthetic gases.

(2) Where oxygen or nitrous oxide piping is exposed, it shall be painted green for oxygen service and blue for nitrous oxide service.

(3) All current rules published by the National Fire Protection Association under chapter "Recommended Safe Practices for Hospital Operating Rooms", and rules adopted by the Compressed Gas Association, Inc., shall be observed insofar as applicable for the construction and use of central piping systems. In addition to these rules, the following guide specifications shall be observed:

(c) Manifold room

(1) All electrical lights, switches, relays, and other electrical equipment shall be of vapor proof design if such equipment is located in the manifold room.

(2) Manifold room shall have fireproof door without louvres. Provide lettering on outside of door leading to manifold room. Letters are to be not less than 2 inches high, reading "Oxygen Room-No Smoking".

(3) Provide exhaust system for ventilating manifold room. If natural outside ventilation is not provided, provide adequate mechanical exhaust system. Control for mechanical exhaust system shall be outside of manifold room.

* * *

(d) Manifold header

(1) Manifold shall be of substantial design. Manifold and header controls shall be securely bolted to wall or floor by means of substantial supports.

(2) Manifold header shall be constructed of bronze or brass. High pressure headers, fitting and connecting coils shall be capable of withstanding a test pressure of not less than 4,000 pounds per square inch.

(3) Leads of connections attaching cylinders to manifold shall be of annealed brass, bronze or copper and of

suitable strength and flexibility. Check valve to be provided in each lead to prevent backflow.

(4) Approved type pressure reducing valves shall be installed in manifold assembly to maintain a delivery pressure of not more than 50 pounds per square inch in the distribution system. Pressure gauges marked “Oxygen” or “Nitrous Oxide” respectively shall be provided in conspicuous location in order to permit observation of delivery pressure.

(5) A built-in pressure relief valve shall be provided on the reduced side of the manifold header. Relief valve shall be set at not over 100 pounds per square inch. Discharge of relief valve shall be piped to outside air.

(6) Means shall be provided to prevent the connection of nitrous oxide cylinders to an oxygen manifold and vice versa.

* * *

(e) Distribution system

(1) Oxygen or nitrous oxide distribution piping shall be standard full weight iron pipe size, brass or copper pipe with substantial brass or copper fittings or copper tubing type K or B with approved fittings and shall be made clean before installation and protected against mechanical injury. Proper allowance shall be made for expansion and contraction, jarring and vibration. Brass used for piping shall have a copper content of not less than 83 percent.

* * *

(3) Threads shall be in accordance with American type pipe thread standards. Threaded joints shall be screwed and soldered or screwed with litharge and glyserine. Threadless type joints shall be brazed with high temperature brazing alloy.

(4) Provide shut-off valve for each individual vertical riser. Shut-off valve shall be located in a conspicuous location. Shut-off valve shall be mounted in a wall box. Cover of box shall be marked, “Riser shut-off valve oxygen service

do not dose except in emergency." Cover of box shall have locking means with key for opening box in separate receptacle, mounted next to the shut-off box.

(5) Pipe shafts for vertical risers shall be vented at the top except such shafts which are not open between floors and in which piping is carried through sleeves packed with oil free incombustible material at the floor levels.

(6) Horizontal distributing branches taken off main risers on each floor shall be provided with a shut-off valve or shut-off valves so that oxygen service for an entire floor or section of a floor may be shut off without affecting service on other floors. Such shut-off valve shall be provided in each branch line for every twelve outlets or for every hundred feet of branch line, passageway between furthermost outlet and shut-off valve to be unobstructed.

(7) Floor shut-off valves shall be located in conspicuous manner and in easy reach, properly marked, either recessed or exposed, or

(8) The following may be substituted as conforming with paragraphs (4) and (7) of subdivision (e) above: A valve box fitted with an emergency replaceable polystyrene window with a pull ring assembly, which can be snapped out in an emergency. This door window shall be lettered "Caution-Oxygen or Nitrous Oxide Valve. Close only in emergency-Pull ring to break window."

(f) Outlet valves and outlet boxes

(1) For operating rooms and anesthesia rooms

(i) For each operating or anesthesia room provide a separate shut-off valve so that shutting off gas supply to one operating or anesthesia room will not affect the supply to others. Valves shall be located on the outside of such rooms and be accessible at all times for use in emergency. Valves shall be mounted in recessed boxes or in such manner that they are protected against mechanical injury. Valves shall be of acceptable type and marked to prohibit tampering or inadvertent closing.

(ii) Where oxygen is piped in combination with other anesthetic gases, individual wall outlets shall be fitted with safety keyed outlet valves so as to prohibit the accidental connection of an oxygen line to a nitrous oxide line and vice versa. Safety keyed outlet valves shall be automatically closed when safety key on the take-off line is disconnected from the outlet valve.

(iii) Where oxygen only is piped to operating or anesthesia rooms, not combined with other anesthetic gases, an approved type oxygen wall outlet valve with dust cap and chain is acceptable.

(2) Wall outlets in patient and treatment rooms

(i) An approved type oxygen and shut-off valve with dust cap and chain, or an automatic safety keyed outlet valve, or a combination of both shall be provided exposed or in a flush mounted recessed wall box so that various accessories may be connected to such outlet valves.

* * *

(g) Alarm systems. A closed circuit electrical operating alarm system shall be provided that will give a visible and audible signal when the pressure in the system varies eight pounds above or below the normal line pressure of 50 pounds. All equipment shall be approved by the Board of Standards and Appeals of the City of New York. All wiring shall be installed standard weight rigid iron conduit, and conductors shall be not less than #14 gauge copper wire. Alarm indicating panel shall be located in a strategic location in the hospital where it is under observation at all times. The system shall be connected to the house side of the owner's lighting meter through an approved 3-wire National Electric Code (N.E.C.) cartridge fuse cut-out having a removable strap or neutral bar. This cut-out cabinet shall be painted red, provided with a lock and stenciled “OXYGEN ALARM”.

* * *

(e) Anhydrous Ammonia

(1) Former Fire Department Rule 3 RCNY §23-06

§23-06 Storage and Use of Ammonia with Dissociating Equipment

(a) Location. Location, of a tank, is to be approved by the Department of Buildings after a site inspection by a representative of the fire department.

(b) Storage

(1) Storage of ammonia in cylinders shall be in an area of masonry which has been approved by the Department of Buildings. This area shall be independently vented to the outer air.

(2) Storage of ammonia in tanks.

(i) Tanks may be located above ground outside of buildings.

(ii) Such tanks shall be provided with: Protection against the sun's rays; electrical groundings; protection against damage by a barrier satisfactory to the fire commissioner; a water deluge system over the tank; a remote control for such deluge system; a vandal-proof fence which will surround the tank.

(3) Tanks located inside the buildings shall be equipped with both manual and automatic deluge systems.

(c) Piping and valves

(1) All piping shall be extra heavy black steel properly supported and protected against mechanical injury and atmospheric corrosion and all fittings and valves forged or cast steel (not galvanized).

* * *

(3) Provide dual relief valves from NH3 storage tank so that either relief valve may be removed for servicing without impairing protection of tank.

(4) All relief valves shall discharge in vent line piped at least 10' above roof of building and above any exposure within 25'. Such vents shall be equipped with rain caps.

(d) Ammonia dissociators

(1) All dissociators or ovens used with dissociated ammonia, hydrogen or hydrogen-nitrogen mixtures shall be approved for such use by the Board of Standards and Appeals.

(2) All dissociator rooms shall be fireproof or fire resistive, sprinklered, and have independent fixed ventilation which shall conform with § 27-4131 of the Administrative Code.

* * *

(4) Each oven or dissociator shall be vented to the outer air by rigid steel piping or a sheet metal duct with all joints tight.

(e) General requirements

(1) Ammonia storage tanks shall meet the specifications of the American Society of Mechanical Engineers, or be approved by the Board of Standards and Appeals for such purposes.

* * *

(3) Ammonia storage tanks shall not exceed 1,000 gallons in capacity.

(4) Tanks shall not be filled to more than 54% waterweight of capacity (approximately 85% by volume).

(5) Liquid outlets from tanks shall be protected with excess flow valves.

* * *

(7) Instruction cards or operating charts shall be posted at or near the storage tanks, dissociators and ovens.

* * *

(9) No mercury manometers or mercury seals shall be used at any time.

(10) All premises wherein ammonia in bulk is stored or used shall have at least twelve (12) sulphur tapers ready for use in event of a leak.

(2) Former Fire Department Rule 3 RCNY §23-07

§23-07 Storage and Use of Anhydrous Ammonia for Duplicating Machines

(a) Scope. This section shall be applicable whether or not a permit is required under Chapter 4 of Title 27 of the Administrative Code. In cases of a conflict of this section with the requirements of the Board of Standards and Appeals, the latter shall prevail.

(b) Appliance shall be approved by New York City Board of Standards and Appeals and bear a permanently affixed label indicating such approval and its calendar number. Installation shall comply with the requirements of that resolution.

(c) Only one cylinder of anhydrous ammonia, not exceeding 150 lbs. capacity shall be used, except that each machine may have one reserve cylinder in the use area when properly manifolded to a pressure relief valve in accordance with §23-07(d) and the supply valve is in the open position. All cylinders shall be secured by chain or other suitable means to prevent accidental toppling. Machines using a cylinder of 8 lbs. net weight or less of anhydrous ammonia, in addition to the permitted manifolded reserve, may have an additional 8lbs. reserve supply, without manifold, in the use area in a metal cabinet marked in accordance with §23-07(i).

(d) Relief valves shall be provided for anhydrous ammonia machines and such valves shall be set at not over 250 p.s.i. Relief valves shall be piped to a safe location in outer air by not less than 1/2 inch pipe. Piping to the outer air is not required for machines using a cylinder of eight pounds net weight or less if its relief valve is piped into an absorber.

(e) An excess flow valve shall be installed in the lines at or near the cylinder outlet; however, an excess flow valve is not required where a fitting is used with an orifice diameter, of a #60 drill size or less, properly installed.

(f) Systems using anhydrous ammonia cylinders, any of which exceed 8 lbs., shall be exhausted directly to a safe location in

outer air through a duct of 4" minimum diameter. Air flow is to be insured by a mechanical blower with a minimum capacity of 175 cubic feet per minute incorporated into the machine. The provision of ventilation shall comply with Chapter 1 of Title 27 of the Administrative Code.

(g)

(1) In addition to those permitted in §23-07(c), reserve anhydrous ammonia cylinders stored shall not exceed a total of 300 lbs. net weight of anhydrous ammonia for use by any single occupant. Such storage shall be outdoors—protected from sun and all mechanical injury when such outside storage is permitted by the Zoning Resolution and is approved by the Department of Buildings or Department of [Ports and Trade] Small Business Services—or indoors in a separate room with ventilation to the outer air through a duct of 4" minimum diameter with inlet near ceiling. Plans for reserve storage rooms are to be approved by Department of Buildings or Department of [Ports and Trade] Small Business Services before construction is commenced, with a copy of approved plans to be filed with the Bureau of Fire Prevention. The door to the reserve storage room is to be self-closing and vapor tight if such doors lead to the interior of the building.

(2) The reserve storage room shall be equipped with open sprinkler heads which are placed in operation by a properly labelled valve located outside the storage room. The sprinkler line may be connected to house water supply in non-sprinkler buildings if lines are of adequate size according to the Administrative (Building) Code.

* * *

(i) Warning signs shall be posted to be visible when entering rooms where anhydrous ammonia is used or stored. Such signs shall be visible whether doors are open or closed in accordance with the following format:

NOTICE THIS AREA CONTAINS ANHYDROUS AMMONIA IN CASE OF AN AMMONIA LEAK OR IF A VERY STRONG AMMONIA ODOR IS PRESENT 1. CALL THE FIRE DEPT. (PHONE # _____)

2. A NON-COIN PHONE MAY BE FOUND AT _____
3. NOTIFY ALL PERSONNEL TO EVACUATE THE AREA
4. SHUT OFF ALL OPEN FLAMES
5. DO NOT SHUT OFF THE DUPLICATING MACHINE SINCE THAT WOULD SHUT OFF THE BLOWER PROVIDING HELPFUL AIR EXHAUST
6. CLOSE ALL DOORS TO ADJOINING AREA

* * *

(k) All open flames shall be shut off in the event of an anhydrous ammonia leak.

(l) Twelve sulphur tapers, litmus paper or unexposed Diazo sensitized paper shall be provided readily accessible and located in the vicinity of the machine and reserve storage room. Such materials shall be in suitable condition to detect ammonia leaks.

(m) A permanent chart listing safety precautions for handling anhydrous ammonia shall be posted at storage facility and where machine is used.

(n) The emergency number for the fire department shall be posted in a conspicuous and permanent manner.

(o) All relief devices, except as provided in §23-07(d) shall be piped directly to the outer air. Such piping shall be adequately secured and protected from physical damage. There shall be no shut-off valves in this piping.

(p) Detailed instructions for the operation of the anhydrous ammonia system shall be posted in a conspicuous and permanent manner.

(q) The anhydrous ammonia cylinder shall be connected to the duplicating machines with high pressure stainless steel flexible connector rated at 4500 p.s.i. bursting pressure and/or with synthetic rubber hose with braid reinforcement with bursting pressure rating of 1750 p.s.i. and/or with equivalent rigid iron or steel pipe.

(r) All appurtenances such as flow meters, pressure regulators and pressure gauges shall be suitable for pressure involved and constructed of material suitable for use with anhydrous ammonia.

* * *

§ 4831-01 Storage of Corrosive Materials in Pre-Existing Facilities

(a) Scope. This section consolidates the New York City Fire Prevention Code and former Fire Department rules in effect on June 30, 2008, that are applicable to the design and installation of *corrosive material* storage in *pre-existing facilities*.

(b) Definitions. Reserved

(c) General Provisions. *Pre-existing facilities* with *corrosive material* storage the design and installation of which would not be allowed or approved under the Fire Code, but which, pursuant to FC102.3 and R102-01, may be continued with respect to such *corrosive material* storage under the applicable laws, rules and regulations in effect prior to the Fire Code, shall continue to comply with the provisions of such laws, rules and regulations, including former Fire Department *rule* 3 RCNY §1-01, until such time as such *facilities* may be required to comply with the Fire Code and the *rules* with respect to their design and installation.

(d) Acids

(1) Former Fire Department Rule 3 RCNY §1-01

§1-01 Tanks Used for Bulk Storage of Acids

* * *

(b) Storage tanks.

* * *

(2) All new or relocated acid storage tanks shall be provided with acid proof dikes capable of holding the full contents of the tank or tanks within the dike in the event of leakage or rupture of the tanks or associated piping.

(3) New or relocated acid storage tanks shall not be permitted in the basement, cellar or sub-cellar of any structure.

(4) New, relocated or altered acid storage tanks shall be provided with excess flow valves for all bottom take-offs except where all bottom take-off piping terminates within the containing dike.

(5) All new and existing acid storage tanks shall be provided with adequate vents, not less than 1 1/4 inches for tanks

up to 1,100 gallons, and not less than 2 inches for tanks of 1,100 gallons or more.

* * *

§ 4832-01 Storage of Cryogenic Fluids in Pre-Existing Facilities

(a) Scope. This section consolidates the *Fire Prevention Code* and former Fire Department rules in effect on June 30, 2008, that are applicable to the design and installation of *cryogenic fluid i*nstallations in *pre-existing facilities*.

(b) Definitions. Reserved

(c) General Provisions. *Pre-existing facilities* with *cryogenic fluid* installations the design and installation of which would not be allowed or approved under the Fire Code, but which, pursuant to FC102.3 and R102-01, may be continued with respect to such *cryogenic fluid* installations under the applicable laws, rules and regulations in effect prior to the Fire Code, shall continue to comply with the provisions of such laws, rules and regulations, including former Fire Department *rule* 3 RCNY 23-03, until such time as such *facilities* may be required to comply with the Fire Code and *rules* with respect to such *cryogenic fluid* installations.

(d) Liquefied Natural Gas

(1) Former Fire Department Rule 3 RCNY §23-03

§23-03 Manufacture, Storage, Transportation, Delivery and Processing of Liquefied Natural Gas

(a) Scope. This section has been developed for New York City because of the congested air patterns, high population density and numerous underground subways, tunnels, sewers and other conduits indigenous to this locality.

This section shall apply to all liquefied natural gas installations both constructed and operated after the date of promulgation and to the safety of operation, to alterations or redesign of existing facilities not covered by existing criteria. This section shall be applicable also to the waterborne transportation and delivery of LNG as it relates to land based facilities. In all matters not specifically provided for herein, the Regulations of the Department of Transportation and the Public Service Commission of the State of New York, and NFPA STD 59A, 1975 shall apply.

(b) Definitions

Agency Having Jurisdiction. Agency having jurisdiction means the local authority having responsibility as prescribed in the Charter and Administrative Code of the City of New York, e.g., Fire Department, Department of Buildings, Department of [Ports and Trade] Small Business Services.

Approved. Approved means sanctioned by the agency having jurisdiction for use or operation, after inspection, test or acceptance of data supporting the safety and/or effectiveness of the design, equipment or process.

Barge (LNG). Barge is a vessel, with or without its own propulsion system, inspected and approved by the U.S. Coast Guard for transportation and delivery of LNG on waterways within the Port of New York.

Barrel. Barrel is a unit of volume equal to 42 U.S. gallons.

Berm. Berm is a concrete or compacted earth structure constructed directly against or closely surrounding the container to a height 10 per cent in excess of the design liquid level to serve as the primary impounding area.

Deriming (defrosting or deicing). Deriming (defrosting or deicing) means the removal by heat and evaporation, sublimation, or solution of accumulated constituents which form solids, e.g., water and CO2 from the low temperature process equipment.

Design Pressure. Design pressure is the pressure used in the design of equipment, container or vessel for the purpose of determining the minimum permissible thickness of physical characteristics of its different parts. When applicable, static heads shall be included in the design pressure to determine the thickness of any specific part.

Dike. Dike is compacted earth, a concrete, or other non-combustible structure used to establish an impounding area suitable for containing the fluids involved.

Fail Safe. Fail safe is the design feature which provides for safe condition in the event of malfunction of control devices, detection of fire or gas leak or interruption of any energy source.

Impounding area. Impounding area is an area which limits by dikes, berms or natural topography, the containment of spilled LNG, flammable refrigerants or other low flash liquids.

Incombustible or Non-combustible. Incombustible or non-combustible means a material which, in the form in which it is used in construction, will not ignite and burn when subjected to fire. However, any material which liberates flammable gas when heated to any temperature up to 1380 degrees Fahrenheit for five minutes shall not be considered non-combustible. No material shall be considered non-combustible which is subject to increase in combustibility beyond the limits established above, through the effects of age, fabrication or erection techniques, moisture, or other interior or exterior atmospheric conditions.

Installations. Installations includes tanks, liquefication and vaporization facilities, processing equipment, piping and associated loading and unloading facilities, and all fire protection.

Liquefied Natural Gas (LNG). Liquefied natural gas means a gas in the liquid state composed predominately of methane and which may contain minor quantities of ethane, propane, nitrogen or other components common to natural gas.

Maximum Allowable Working Pressure. Maximum allowable working pressure means the maximum gage pressure permissible at the bottom of completed equipment, container or vessel in its operating position for a design temperature.

psia. Pounds per square inch absolute.

psig. Pounds per square gage.

Primary Components. Primary components, in general, include those whose failure would permit leakage of the liquid being stored, those exposed to a temperature between -60(degrees)F and -270(degrees)F, and those subject to thermal shock. The primary components shall include, but will not be limited to, the following parts of a double-wall tank; shell plates, bottom plates, knuckle plates, compression rings, shell stiffeners, manways, and nozzles including reinforcement shell anchors, pipe, tubing, forgings, and boltings on both inner and outer tank and the roof plates of the inner tank. All LNG liquid and vapor piping and fittings shall be considered primary components.

Process Equipment. Process equipment means all systems required to condition, liquefy, or vaporize natural gas in all areas of application referred to in these regulations.

Risk Analysis. Risk analysis means a methodology of assessment of an identified hazard utilizing a systematic evaluation of failure modes, probabilities and consequences resulting in quantitative data supporting recommendations for corrective action.

Secondary Components. Secondary components, in general, include those which will normally not be in contact with the refrigerated liquid being stored, those exposed to product vapors and having a design metal temperature of -60(degrees)F or higher.

Service Building. Service building is a building used for office, maintenance, shops, electrical distribution, garage or storage.

Tanker (LNG). Tanker means an ocean-going vessel, inspected and approved by the U.S. Coast Guard for the transportation and delivery of LNG.

Tanks

(i) **LNG storage vessels.** LNG vessels or containers of more than 2,500 gallons capacity operating at not more than 2.5 *psig*.

(ii) **Process, satellite, or similar tanks.** LNG vessels or containers with a capacity of 2,500 gallons or less.

(c) Plant site

(1) Minimum clearances. Minimum clearances shall be maintained between LNG containers, flammable refrigerant storage tanks, flammable liquid storage tanks, building, structures and plant equipment and plant property lines as prescribed in the chart of minimum distance requirements (Figure 1), unless otherwise provided in these regulations. Siting of tanks shall further be based on radiation and vapor dispersions studies made by competent authorities prior to approval

of site plans in order to establish the minimum distance of the property line and to critical occupancies.

	LNG Container	Impounded Liquid	Process Equipment[6]	Vaporizers	Process Contr. Houses	Fire Pump House Fire Prot. Control	Marine Transfer Facilities	Critical Occupancy	Service Buildings	Property Line or Navigable Water	Boil-Off Compressor	Flare Stack or Ignition Source	Sewers, Undergrd. Ducts, Drains
LNG Container	250[2]		250[5]	250[5]	500	500	250[5]	1000[1]	250	250[2]	100	250[2]	500
Impounded Liq.			150	150	250[2]	500	250	1000[1]	250	200[2]		250	50
Process Equipment[6]	250[5]	150		100	100[3]	200	250	250	100	100		100	
Vaporizers	250[5]	150	100		200	200	250	250	200	100	100	100	
Process Contr. Houses	500	250[2]	100[3]	200			250	150	100		100	250	
Fire Pump House Fire Prot. Contr.	500	500	200	200			200	100	100		100	250	
Marine Trans. Facilities	250[5]	250	250	250	250	200		1000	100[4]	100	200	250	
Critical Occupancy	1000[1]	1000[1]	250	250	150	100	1000				100	250	
Service Buildings	250	250	100	200	100	100	100[4]				100	100	
Property Line or Navigable Water	250[2]	200[2]	100	100			100				100	100	
Boil-off Compressor	100			100	100	100	200	100	100	100		100	
Flare Stack or Ignition Source	250[2]	250	100	100	250	250	250	250	100	100	100		
Sewers, Undergrd. Ducts, Drains	500	50											

Figure 1.

Notes:
1. Hospitals, schools, places of assembly, bridges, tunnels, etc.
2. Or one and a quarter tank diameters, whichever is greater, except that tanks of not more than 2500 gallons shall be spaced according to the diameter criteria, but not less than 100 feet.
3. Except where a four-hour unpierced wall separates the control room from flammable liquid handling and explosion venting is provided.
4. For vessels up to 30,000 bbls. cap. Increase to 200 feet for vessels up to 50,000 bbls. and increase to 300 feet for vessels in excess of 50,000 bbls.
5. Or one tank diameter, which ever is greater.
6. Includes cold box.

Thermal radiation and vapor dispersion study. A thermal radiation and vapor dispersion study shall be submitted, prepared by recognized experts in thermodynamics, selected by the owner and acceptable to the Fire Department. The study should include vapor dispersion characteristics resulting from spills caused by total failure modes of the storage tanks, or equipment, or piping. The study should show equilibrium temperatures within a radius of 1,500' of the tank, at wind velocities of O0, 30, and 60 mph, at points where R 1,500', 1,200' and 1,000', 800', 600', 500', 400', 300', 200' and 100' from flame surface (innertank wall) in events where an entire tank or group of tanks are involved in a fire. Attention shall also be given to the possibility of local overheating and fires in impounding areas.

(2) Site plans

(i) Proposed site plan. A proposed site plan shall be filed with the Fire Department indicating all major characteristics of the site, showing plant buildings, tanks, containers, dikes, process areas, transfer areas, major LNG piping, lot lines, shore lines, and exposures within 1,500' of lot lines. Such aerial photos as the Fire Department may require shall be included. Site plans shall include underground channels, such as conduits, pipelines, drainage ditches, and similar channels.

(ii) Soil selection. LNG tanks, cold boxes, piping and supports, and other cryogenic equipment shall be properly sited, designed and constructed so that no damage from freezing or heaving of the soil will develop. The soil shall be selected, prepared, and protected in accordance with the requirements of the agency having jurisdiction. (Department of [Ports and Trade] Small Business Services or Department of Buildings.)

(iii) Protection of site. Plant sites shall be protected from the forces of nature as flooding by rains, high tides, or soil erosion by grading, draining and dikes. Grass, weeds, trees, or undergrowth shall be cleared within 25 feet of any piping, container, or process equipment.

(3) Facility description. A complete description of the facility shall be filed with the site plan, indicating LNG tanks and sizes, method of liquefaction and vaporization, other methods of acquiring LNG, and fire extinguishing systems. Also included shall be a detailed analysis of the typical product to be stored.

(4) Roads. At least two all-weather roads shall be provided at least 20 feet in width providing access to all areas of the facility. The roads shall be designed in accordance with the specifications of the American Association of State Highway Officials for a uniformly distributed load of 600 pounds per square foot or for the maximum vehicular wheel load that could be imposed thereon, whichever develops the greater stresses. Such design shall take into consideration the weight, height, and turning radius of the heaviest vehicles of the fire department which may have occasion to use the roads. Current specifications of such vehicles shall be obtained from the fire department. Equipment shall be provided to maintain the roads free of snow and ice accumulations and shall at all times be maintained in serviceable condition. Entry gates at least as wide as the road shall be located remote from each other to provide alternate means of access to the plant.

(5) Fences. A protective fence of incombustible material shall be erected at the property line, at least eight feet in height, having locked gates openable only to authorized persons on proper identification.

(d) Tank site-design, general

(1) Berm height. The maximum height from the ground level to the top of the berm shall be 60 feet and the minimum ratio of the diameter of the container to maximum liquid level shall be 3:1 (See Figure 2).

(2) Tanks over 2,500 gallons. LNG stored in tanks over 2,500 gallons shall be protected from spillage by quadruple containment, i.e., a primary cryogenic container, a secondary cryogenic container, a concrete or earth berm which shall serve both as a tertiary container and primary impounding area, and lastly an outer dike or

impounding area which shall constitute the secondary impounding area.

(i) Tanks over 2,500 to 100,000 gallons. Tanks over 2,500 gallon capacity to 100,000 gallons shall be enclosed in a berm of compacted earth suitably protected against soil erosion or a reinforced concrete berm. The outer shell shall be adequately protected against corrosion.

(ii) Tanks over 100,000 gallons. Tanks over 100,000 gallon capacity shall be enclosed in reinforced concrete berm designed to withstand (without damage to the primary container) the impact of the heaviest aircraft which can operate to or from any airport within a radius of ten miles at a speed of 200 knots. The effectiveness of the berm in providing such protection shall be proven by a finite element analysis or block analysis or other acceptable method.

(e) Impounding areas, berms, dikes. Every LNG container shall be located within both primary and secondary impounding areas or dikes, except that tanks with capacity of not over 2,500 gallons need only a primary impounding area or dike.

(1) Impounding areas

(i) Impounding area. The impounding area formed by dikes or natural topography shall slope away from the tank to a basin provided for minor spills and shall further slope away from waterways or property lines. Cryogenically suitable approved pumps manually controlled and piping on incombustible and cryogenically suitable supports shall be used to return such spills to a tank where possible.

(ii) Impounding area construction. Impounding areas shall not contain underground channels, drains, conduits, or sewers. If disposal of storm water is required, it shall be pumped over the dikes by means of fixed piping and manually controlled.

(2) Impounding areas formed by dikes or natural topography

(i) Capacity. The minimum capacity of the area shall be 150 percent of the maximum liquid capacity of the container, LNG piping and processing equipment, for which the area is provided; except that 250 percent or greater capacity shall be required where foaming, vigorous boiling or other expansion phenomena may be encountered.

(ii) Container restrictions. Not more than one container shall be installed in a single dike and the maximum ratio of highest liquid level in the container to the height of the dike at the required capacity level shall be 2:1 (See Figure 2).

(3) Siting of primary impounding areas for containers 2,500 gallons or less (not bermed). Provision shall be made to prevent a radiation flux from a fire over the primary impounding area from exceeding 1500 BTU/HR/Ft^2 at ground level at a property line which can be built upon, when ambient atmospheric conditions are zero wind speed, 70 degrees Fahrenheit temperature radiation flux of 1500 BTU/HR/Ft^2 is about the level at which protection for humans should be provided. This provision may be complied with, if siting shall be in accordance with Figure 1 or with the formula: d_1 = two times the square root of A (whichever is greater) where d_1 is the distance in feet from the nearest edge of impounded liquid in the primary impounding area to process equipment, vaporizers, service buildings, process and fire control houses, transfer facilities, ignition sources or to the property line which may be built upon or to a navigable waterway, (but the minimum distance to the near edge of such waterway or property line shall be 200 feet) and A = surface areas of impounded liquid.

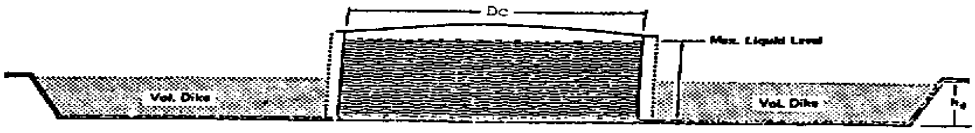

$$\frac{Dc}{\text{Max. Liquid Level}} = \frac{3.0}{1} \quad \text{(Min.)}$$

$$\frac{\text{Max. Liquid Level}}{hd} = \frac{2.0}{1} \quad \text{(Max.)}$$

$$\frac{\text{Volume Dike}}{\text{Volume Container}} = \frac{1.5}{1} \quad \text{(Min.)}$$

RATIO OF DIKE HEIGHT TO LIQUID LEVEL

FIGURE 2

(4) Siting of primary impounding areas for containers over 2,500 gallons (bermed). In the case of bermed tanks, provision shall also be made to prevent a radiation flux from a fire over the primary impounding area from exceeding 1500 BTU/HR/Ft^2 at ground level at a property line, which can be built upon, when ambient atmospheric conditions are zero wind speed, 70 degrees Fahrenheit temperature, and 50 percent relative humidity. This provision may be complied with if siting shall be in accordance with Figure 1 or the following formula: d_2 = one and one-quarter times the square root of A (whichever is greater). A = the cross-sectional area of the inner diameter of the berm, d_2 = distance in feet from the nearest edge of liquid in the impounding area to process equipment, service buildings, vaporizers, ignition sources, process and fire control houses and to other LNG containers or to a transfer facility. Notwithstanding the foregoing, the edge of any impounded LNG shall not be closer than 1,000 feet to any critical occupancy such as a school, hospital, place of assembly, bridge, or tunnel.

(5) Berms. Berms of reinforced concrete shall be at least ten feet thick, liquid tight, and strong enough to meet the requirement of § 23-03 (e)(4). Berms of compacted earth shall be at least ten feet wide at the top and have a slope of 1:1 1/2. Two steel or concrete access stairways from the base to the top of the berm shall be erected diametrically opposite each other.

(6) Dikes

(i) Dikes shall be constructed of compacted earth or concrete capable of withstanding thermal shock through a temperature range of -260 degrees Fahrenheit to 1800 degrees Fahrenheit and capable of withstanding full hydraulic head and hydraulic surge.

(ii) Dikes shall be liquid tight without openings for pipes. Access roads and ramps for construction, maintenance, and fire protection vehicles are required to pass over the top of the dikes.

(iii) Secondary impounding areas shall be provided for each tank over 2500 gallon capacity.

(7) Surrounding areas

(i) No sewers, underground ducts, or drains will be permitted within 500 feet of the LNG storage tank, or 50 feet of any impounding area.

(ii) Drainage shall be accomplished by grading, normal evaporation, or by non-automatic means to a safe location. Where impounding areas are to be drained, all drainage piping shall pass over the top of the dike.

(iii) The following areas shall be graded and drained in a manner that will minimize the possibility of endangering personnel, structures, or equipment, or adjoining property through accidental spills or leaks.

(A) Process areas.

(B) Vaporization areas.

(C) In-plant LNG, flammable liquid, and flammable refrigerant transfer areas.

(D) Areas surrounding flammable refrigerant and flammable liquid storage tanks.

(f) Spacing of equipment and structures. Minimum clearances shall be maintained for equipment and structures as noted in this subdivision (f). All equipment and structures referred to in this subdivision (f) shall conform to the minimum clearances as presented in Figure 1.

(1) Vaporizers

(i) Vaporizers shall be located at least 100 feet from process equipment, boil-off compressors, flare stacks, property lines or navigable waters, flammable storage of 2,500 gallons or less, and loading or unloading connections other than marine transfer facilities; at least 150 feet from any impounding area; at least 200 feet from service buildings, process control houses or fire protection control facilities; and at least 250 feet from marine transfer facilities, critical occupancy or flammable storage over 2,500 gallons.

(ii) Vaporizers and their primary heat sources shall be located at least 100 feet from any source of ignition.

(iii) No vaporizer shall be located in an enclosed structure or building, unless such enclosure is satisfactorily ventilated and provided with combustible gas detection, alarm and shut down as per § 23-03(g)(2)(ii) is in conformance with §§ 23-03(g)(1)(i) and 23-03(g)(1)(ii) for construction and explosion venting, is provided with an explosion suppression system conforming with NFPA-69 of 1973 and applicable resolution of the Board of Standards and Appeals, and with all electrical equipment and lighting conforming with the New York City Electrical Code for operation in hazardous atmospheres; supplementary heating of the enclosure shall be only by means suitable for hazardous atmospheres.

(2) Multiple vaporizers

(i) Clearance in multiple heated vaporizer installations shall be as recommended by the manufacturer, but not less than five feet.

(ii) In multiple vaporizer installations, an adjacent vaporizer or primary heat source shall not be considered to be a source of ignition.

(iii) Process heaters or other units of fired equipment are not considered to be sources of ignition with respect to vaporizer siting provided they are interlocked so they cannot operate when a vaporizer is operating or when the piping system serving the vaporizer is either cooled down or in the process of cooling down.

(3) Process equipment. Process equipment containing LNG, refrigerants, flammable liquids or gases shall be located at least 100 feet from sources of ignition, property line which may be built on, control rooms, offices, shops, or other occupied structures; at least 200 feet from fire protection control center; and at least 250 feet from marine transfer facilities or critical occupancy buildings, except that control rooms may be located in a building housing flammable gas compressors if construction complies with § 23-03 (g)(2).

(4) Fired equipment and sources of ignition. Fire equipment (other than vaporizers) or other sources of ignition shall be located at least 250 feet from any impounding area, container, transfer facility, fire pump house and control, process control house, or critical occupancy; and at least 100 feet from process equipment, vaporizers, service buildings, property line which may be built on, and boil-off compressors, except as provided in § 23-03(f)(2)(iii).

(5) Loading and unloading facility

(i) A pier or dock for pipeline transfer of LNG shall be located so that any tanker or barge moored thereto for loading, unloading, or containing gas shall be located at least 1000 feet from any bridge over a navigable waterway or critical occupancy; at least 250 feet from LNG storage containers, impounding areas, process equipment, process control houses, vaporizers, flare stacks or ignition sources; at least 200 feet from fire pump houses, fire protection control facilities or boil-off compressors; and at least 100 feet from service

buildings, property line, or any structure intended for human occupancy for vessels having a capacity up to 30,000 barrels of LNG; 200 feet for vessels having a capacity of 50,000 barrels except for plant structures essential to transfer operations.

(ii) LNG and flammable liquid loading and unloading connections other than marine shall be at least 250 feet from sources of ignition, except as provided in § 23-03(f)(1)(i) process areas, control buildings, and storage containers; and 200 feet from other occupied buildings. This does not apply to structures or equipment directly associated with the transfer operation.

(6) LNG storage containers. LNG storage containers shall be sited in accordance with Figure 1, except as may be modified under § 23-03 (c)(1). LNG storage containers shall be located at least 1000 feet from any critical occupancy; at least 500 feet from process control houses, fire pump houses, fire protection control facilities and sewers, underground ducts or drains; at least 250 feet or one and one-quarter tank diameters, whichever is greater, from another LNG container, property line, navigable water, flare stack or ignition source; at least 250 feet or one tank diameter, whichever is greater, from process equipment, vaporizers or marine transfer facilities; and at least 250 feet from any service building.

(7) LNG impounding areas. LNG primary impounding areas shall be located in accordance with Figure 1 or distances derived from § § 23-03 (e)(3) or 23-03 (e)(4), whichever is greater. All impounding areas shall be located at least 1000 feet from any critical occupancy; 500 feet from fire pump house or fire protection control facilities; 250 feet from any process control house, service building, marine transfer facility, flare stack or ignition source; 200 feet from any property line or navigable water; 150 feet from process equipment or vaporizer; and 50 feet from any sewers, underground ducts or drains.

(8) Boil-off compressors. Boil-off compressors shall be located at least 200 feet from marine transfer facilities and at least 100 feet from storage tanks, vaporizers, process control houses, fire pump house, service building,

critical occupancy, property lines, or navigable waters, or to flare stacks or ignition sources.

(9) Process control houses. Process control houses shall be located at least 500 feet from LNG containers; 250 feet from any impounding area, marine transfer facility, flare stack or ignition source; 200 feet from any vaporizer; 150 feet from critical occupancy; and 100 feet from service buildings, boil-off compressors or process equipment.

(10) Fire protection. Fire pump house and fire protection control facilities shall be located at least 500 feet from LNG containers; 250 feet from any impounding area, marine transfer facility, flare stack or ignition source; 200 feet from any vaporizer; and 100 feet from critical occupancy or service buildings.

(g) Buildings and structures.

(1) Construction

(i) General. All buildings and structures shall be of non-combustible construction classified as Group I in the Administrative Code, § 27-274. Buildings or structural enclosures in which LNG, flammable refrigerants or flammable gases are handled, stored or used shall be of lightweight non-combustible construction Class I-E with non-load bearing walls, and explosion venting conforming to the requirements of NFPA STD 68-1974 and the Department of Buildings as specified in the Administrative Code, § 27-401.

(ii) Prohibited areas. All such buildings shall be built on grade without below grade areas.

(2) Rooms containing flammables or cryogenic fluids

(i) General. If rooms containing cryogenic or flammable fluids are located within or attached to building in which such fluids are not handled, i.e., control rooms, shops, etc., there will be permitted one common wall which shall be Class I-A construction, or four-hour fire resistance rating without openings, and designed to withstand an explosive force of at least 100 psf. and shall be gas-tight.

(ii) Explosion protection. Such rooms shall be further protected against explosion by installation of the following equipment:

(A) Exhaust system. A continuously operation high and low level mechanical exhaust system capable of venting at the rate of at least 1 cfm of air per square foot of floor area. This shall be a dual rate system which will double its exhaust capability on detection of a flammable gas or vapor of 10 per cent Lower Explosive Limit (LEL), such detector shall then initiate the Emergency Shut Down (ESD) at 25 per cent LEL. The exhaust system shall extend to all areas, pits or floor depressions.

(B) Ventilators. A system of open ridge ventilators shall be provided.

(h) Process systems

(1) Process equipment locations. Processing equipment containing LNG, flammable refrigerants or gases shall be located outdoors, insofar as possible, to facilitate manual fire fighting, and dispersal of accidentally released liquids and gases. When necessary to locate such systems indoors, buildings shall comply with § 23-03(g).

(2) Pumps and compressors

(i) Materials of construction. Pumps and compressors shall be constructed of materials suitable for the conditions of temperature, pressure, and use which they are expected to encounter and shall be approved and certified to the Fire Department as hereinafter provided.

(ii) Valves. Every pump and compressor shall be valved so that it can be isolated for maintenance. In addition, when installed in parallel, each discharge line shall have a check valve.

(iii) Pressure relief. Pump and compressors shall be provided with a pressure relieving device on the

discharge to limit the pressure to the maximum safe working pressure of the casing and downstream equipment.

(iv) Vent and relief valves. Each pump shall be provided with an adequate vent and relief valve which will prevent over-pressuring the pump casing during the maximum possible rate of cooldown.

(v) Pump installation. Pumps used for transfer of liquids at temperatures below -20 degrees Fahrenheit shall be provided with suitable means of precooling to reduce the effect of thermal shock.

(vi) Foundation and sumps. The foundations and sumps for cryogenic pumps shall be of incombustible construction, designed and constructed to prevent frost heaving.

(3) Flammable refrigerant and liquid storage. Installation of storage tanks for flammable refrigerants and liquids shall comply with the requirements of Chapter 4 of Title 27 of the Administrative Code.

(4) Process equipment

(i) Siting. Process equipment shall be sited in accordance with the distance requirements of § 23-03 (f).

(ii) Boilers. Boilers shall be designed, fabricated, approved, and certified in accordance with the requirements of the Administrative (Building) Code.

(iii) Heat exchangers. Shell and tube heat exchangers shall be designed, fabricated, tested, inspected, approved, and certified by the manufacturer in accordance with the requirements of the Tubular Exchanger Mfrs. Assoc. (TEMA) 1968 edition. Certification certificates shall be filed with the Fire Department. The shells and internals of all exchangers shall be pressure tested, inspected, and stamped in accordance with Section VIII,

Division 1, of the ASME Boiler and Pressure Vessel Code, 1971 edition, when such components fall within the jurisdiction of this code. A copy of the ASME certification of test and inspection shall be filed with the Fire Department.

(iv) Engine and turbines. Installation of internal combustion engines or gas turbines shall comply with the requirements of Chapter 1 of Title 27 of the Administrative Code and NFPA 37, 1970 (Installation and Use of Stationary Combustion Engines and Gas Turbines).

(v) Boiloff and flash gas systems

(A) A boiloff and flash gas handling system separate from container relief valves shall be installed for the safe disposal of vapors generated in the process equipment and LNG containers.

(B) LNG containers shall have their boiloff and flash gases discharge safely to atmosphere or closed system, designed to prevent inbreathing of air.

(C) Provision may be made to introduce natural gas or nitrogen into the containers in the event a vacuum is experienced if the natural gas so introduced will not create a flammable mixture in the container.

(vi) Process equipment supports. Where the structural stability of process equipment is essential to plant safety, the supports for the equipment shall be protected against a two hour fire exposure or be protected against cold liquid or both, if they are subject to such exposures.

(5) Depressurizing equipment

(i) Emergency depressurization. Provisions shall be made for depressurizing equipment containing gases and liquids in case of fire, failure of the equipment or similar emergency. Emergency

controls for depressurization shall be readily accessible and suitably designated.

(ii) Gas and liquid disposal. Gases in the processing equipment shall be vented to the flare stack and LNG shall be relieved to a dump tank or holding reservoir, which shall be vented to the flare stack. The liquid dump tank or holding reservoir shall be of cryogenically suited material large enough to contain all LNG in the processing equipment. Construction shall be in accordance with Subchapter 17 of Chapter 4 of Title 27 of the Administrative Code. The tank or holding reservoir shall be protected against fire by being buried or enclosed in 4-hour rated material, unless it can be proven to the satisfaction of the Fire Department that the anticipated amount of LNG can be quickly vaporized and relieved to the flare stack, and no LNG will accumulate.

(iii) Compression equipment vents. Compression equipment handling flammable gases shall be provided with adequate vents piped to relieve to the flare line.

(6) Cold box construction. The cold box structure and equipment shall be constructed of incombustible material. Cold boxes shall be considered as flammable gas containers for the purpose of purging and shall be subject to the regulations relative thereto as contained in this regulation. If a flammable gas-air mixture is detected in the cold box, inert purge gas shall be introduced until a flammable mixture no longer exists.

(7) Air injection. Air shall not be injected or introduced by the owner into the plant inlet gas stream.

(8) Process report. A process report shall be filed with the Fire Department, for review; such report shall contain the following:

(i) Process information on incoming feed gas treatment, refrigeration, liquefaction, vaporization, deriming, and odorization.

(ii) Basis for approval of all equipment used with reference to the standards of construction, e.g., ASME, ANSI, Chapter 4 of Title 27 of the Administrative Code, and Chapter 1 of Title 27 of the Administrative Code.

(iii) All other items specified in § 23-03(u)(5)(ii).

(i) Stationary LNG containers, general

(1) Primary container

(i) Suitability for service. The primary container for LNG shall be cryogenically suited material. All materials in direct contact with LNG shall be physically, chemically, and thermally compatible with LNG. NFPA STD 59A-1975, § 423, shall be used as a guide in such determination. Storage containers for LNG shall be designed for the minimum temperature of LNG to be stored at atmospheric pressure. Container foundations shall be capable of withstanding contact with LNG so as not to threaten structural integrity.

(ii) Structural design. Structural design shall be predicated on the density of the product to be stored but not less than 29.3 pounds per cubic foot and suitable allowance made for the requirements of hydropneumatic testing found in § 23-03(s) of these regulations. No product with a density greater than that for which the container has been designed shall be stored until permission has been obtained from the Fire Department based on supporting data and calculations and approvals granted by the Department of Buildings and/or Department of [Ports and Trade]<u>Small Business Services</u>. If deemed applicable by the Department of Buildings and/or Department of [Ports and Trade]<u>Small Business Services</u>, seismic loads shall be considered in the design.

(iii) Insulation. Insulation in both non-load bearing and load-bearing areas shall be incombustible. Exposed insulation shall contain, or be inherently a vapor barrier, be water free and resist dislodgement by fire hose streams. An outer shell

used to contain loose insulation shall be constructed of steel or concrete. Exposed weatherproofing shall be incombustible. No combustible or flammable adhesives for insulations shall be used.

(2) Inspections, general. Prior to initial operation, containers shall be inspected to assure compliance with the engineering design and with the material, fabrication, assembly, and test procedures of this regulation. These inspections and tests shall be made by the operator and his or her designated employee in the presence of and witnessed by representatives of the Fire Department, Department of [Ports and Trade]Small Business Services, Department of Buildings or other agencies having jurisdiction. Testing of LNG containers shall be conducted in accordance with the requirements contained in § 23-03(s) of these regulations.

(3) Maximum pressure. The operator shall specify the maximum allowable working pressure which shall include a satisfactory margin above the operating pressure, and the maximum allowable vacuum.

(4) LNG tank marking. Each container shall be identified by the installation of a permanent and legible plate at the ground level approach, with the following information:

(i) Builder's name and date built.

(ii) Nominal liquid capacity in barrels.

(iii) Design pressure for methane gas at top of tank.

(iv) Maximum permissible density of liquid to be stored.

(v) Maximum level to which container may be filled with stored liquid and with water for testing purposes.

(vi) Maximum temperatures in degrees Fahrenheit for which container was designed.

(5) Tank penetrations. Penetrations of storage containers shall be through the roof only and all such penetrations

shall be marked so as to be clearly identifiable as to function under all operating conditions.

(6) Maximum capacity. The maximum capacity of any LNG tank shall be 300,000 barrels.

(7) Prohibited tank types. The following types of tanks shall be prohibited:

(i) "Frozen hole" inground containers.

(ii) Tanks of more than 2,500 gallons capacity designed to operate at more than 2.5 *psig*.

(j) Metal containers

(1) General. Metal containers shall be 9 per cent nickel steel alloy, stainless steel, aluminum, or other metal authorized under Section VIII, Division 1, ASME Boiler and Pressure Vessel Code, 1971 edition, for use at -260 degrees Fahrenheit. The use of a non-rigid container or liner is prohibited. Metallic tanks shall be fabricated in accordance with the requirements of API STD 620, Appendix Q, July 1973 or equivalent, except as herein modified.

(2) Foundations. Above ground LNG containers shall be supported on suitable concrete foundations designed to comply with Chapter 1 of Title 27 of the Administrative Code and API Standard 620, Appendix Q, July 1973, for a container to be tested with water to the top of the shell. The design shall be done by an engineer qualified in this specialty and reviewed and filed with the Department of [Ports and Trade] Small Business Services or Department of Buildings by a professional engineer licensed in the State of New York, and a copy of the approved plan filed with the Fire Department.

(3) Containers designed for 15 *psig* or less. Welded primary and secondary containers designed for not more than 15 *psig* shall comply with API Standard 620, Appendix Q, July 1973 except as herein modified. All welds shall be made by welders licensed by the Department of Buildings under Article 3 of Subchapter 2 of Chapter 1 of Title 26 of the Administrative Code. All butt welds shall be 100 per cent radiographed (horizontal and vertical). Lap

welds shall be subjected to a vacuum box test as per API 620, July 1973. A solution vacuum box test shall also be made of the inner and outer tank bottom corner welds, inner tank reinforcing plate to shell welds, reinforcing plate to neck welds and neck-to-shell welds. Magnetic particle or other acceptable methods shall be permitted where other methods are impractical, subject to the approval of the Fire Department and Department of Buildings and/or Department of [Ports and Trade]Small Business Services. All fluxes used in welding shall be thoroughly removed.

(4) Containers designed for more than 15 *psig*

(i) General. Containers shall be double-walled with inner container holding the LNG surrounded by insulation contained by the outer jacket. The insulation shall be evacuated or purged.

(ii) Inner container. The inner container shall be fabricated of material authorized by the ASME Boiler and Pressure Vessel Code, Section VIII, Division 1, 1971 edition, for cryogenic liquids at -260 degrees Fahrenheit. The inner container shall be of welded construction conforming to the ASME Boiler and Pressure Vessel Code, Section VIII, Division 1, 1971 edition, and designed for a pressure not less than total of working pressure, LNG hydrostatic head and vacuum, if any. The inner container shall be supported concentrically within the jacket by a system capable of sustaining the maximum loads.

(iii) Outer jacket. The outer jacket shall be of welded steel construction in accordance with the ASME Boiler and Pressure Vessel Code, Section VIII, Division 1, 1971 edition. In the case of positive pressure purge, the jacket shall be designed to be capable of structurally supporting the inner tank and insulation and maximum positive pressure of the purge gas; in the case of vacuum use the jacket shall be designed to resist an external pressure at not less than 15 *psig*. The jacket shall be equipped with a relief device functioning at a pressure not greater than the internal design

pressure of the jacket, the external design pressure of the inner tank or 25 psi, whichever is less.

(iv) Thermal barriers. Thermal barriers shall be provided between cold lines and the jacket. Only incombustible insulation compatible with LNG and natural gas shall be used between the inner container and jacket. Such insulation shall be water free, capable of withstanding thermal cycling between -260 degrees Fahrenheit and 1800 degrees Fahrenheit without decomposition, embrittlement, settling or deterioration, and chemically non-reactive with LNG or natural gas. The inner container shall be designed to withstand without collapsing, the external pressure of the insulation and purge gas.

(v) Support systems. Support systems shall be designed with due consideration to expansion and contraction of the inner container and all thermal stresses created. Saddles and legs shall be designed to withstand the effects of LNG fires, spills, wind loads, shipping loads, erection loads and seismic loads, and accidents attributable to motor vehicles.

(5) Internal lines. Internal lines between the inner container and the jacket shall be designed for the pressure rating of the inner container and allowance made for thermal stresses created. No bellows shall be permitted in the annular space. All such internal lines shall be of materials acceptable under the ASME Boiler and Pressure Vessel Code, Section VIII, Division 1, 1971 edition, for cryogenic liquid at -260 degrees Fahrenheit.

(k) Concrete containers. Prestressed concrete containers. This subdivision k applies to the design and construction of prestressed concrete containers for any operating pressure, whether externally or internally insulated and for prestressed concrete walls or berms surrounding any container. Non-metallic tanks shall be prefabricated or poured in place reinforced concrete. After the concrete has attained 90 per cent of 28-day strength the tank shall be post-stressed with steel wires, both vertically and circumferentially for tank walls and floors to assure that concrete will remain in compression during all phases of tank operation. Except as modified in these

regulations, construction, materials, and tests shall be in accord with applicable ACI, ASTM, and API specifications enumerated in § § 423 and 424 of Standard 59A-1975 of the NFPA code. The Department of Buildings or Department of [Ports and Trade] Small Business Services shall provide surveillance and inspection to insure compliance with the applicable requirements and shall require such tests and engineering data as it deems necessary and appropriate.

(1) Foundations. Concrete LNG containers shall be supported on foundations of concrete, steel or combination which shall have been designed and constructed in accordance with recognized structural engineering practices to ensure a stable foundation. Anchorage shall be provided to counteract flotation forces unless it can be proven to the satisfaction of the Department of Buildings and/or Department of [Ports and Trade]Small Business Services that such is not necessary. All exposed steel shall be fireproofed with concrete or insulation resistant to dislodgement by hose streams, and shall have a minimum fire-resistant rating of 4 hours. The foundations shall be designed to support the concrete tank filled with water to the top of the shell during tests. The design shall be done by an engineer qualified in this specialty and reviewed and filed with the Department of [Ports and Trade]Small Business Services or Department of Buildings by a professional engineer licensed in the State of New York, and a copy of the approved plan filed with the Fire Department.

(2) Container construction

(i) Design and construction of the container shall comply with applicable provisions of Chapter 1 of Title 27, Administrative Code and/or recognized standards accepted by the Department of Buildings and/or Department of [Ports and Trade] Small Business Services to provide maximum safety. No construction on any container shall begin until such agency shall have certified to the Fire Department that the container, as designed, does meet the required standards and is satisfactory for the storage of LNG, has provided the Fire Department with such data concerning the container which the Fire Department deems necessary, and after the Fire Department has

indicated, in return, its acceptance of the design. Materials subject to LNG temperature shall be selected, specified, tested, and utilized in accordance with the requirements of the Fire Department and the Department of Buildings and/or Department of [Ports and Trade]Small Business Services based on recognized engineering standards. The tank shall be designed to withstand testing by filling with water to the top of the shell.

(ii) The use of the alternative materials of construction may be approved by the Department of Buildings and/or Department of [Ports and Trade]Small Business Services provided that after due investigation such agency is satisfied that such substitutions provide, at least, an equivalent degree of safety and further provided that the Fire Department concurs in such substitution.

(iii) Roof structures and suspended ceilings shall be of materials suitable for cryogenic temperatures and so constructed as to prevent total roof collapse in the event of internal fire. Roof guides shall be incorporated into the structure to minimize the possibility of the roof falling into the tank in the event of pressure surge within the container.

(iv) The seal between the wall and floor shall be of a type acceptable to the Fire Department and the Department of [Ports and Trade]Small Business Services and/or Department of Buildings. It shall not be a corrugated type expansion seal.

(l) Container purging

(1) Purging. Purging shall be conducted by experienced and qualified personnel under the direction of an experienced engineer competent in this specialty, who shall prepare a written procedure for review and acceptance by the Fire Department prior to the start of purging. Responsibility and authority for the purging operations should be vested in a person who is familiar with the properties and nature of the materials involved and the construction and function of the equipment to be purged. [He] The person should be capable of deciding how the purging should be

done and of judging whether it is proceeding satisfactorily and when it is properly completed. He or she should be able to detect any hazards and to decide how best to overcome any difficulties that might arise. He or she should plan and discuss the schedule of the entire operation with operating, maintenance, engineering, testing and safety personnel involved.

(2) Container into service. Prior to placing an LNG container into service the air must be displaced by an inert gas such as nitrogen in an acceptable manner so that at no time will there be a flammable mixture in the container.

(3) Container out of service. Prior to taking a container out of service the natural gas shall be purged with an inert gas such as nitrogen in a safe manner. All tank interior maintenance and repairs shall be performed in an atmosphere of inert gas.

(4) Purging operation

(i) During purging operation the interior of the container shall be continuously monitored for the presence of oxygen and flammable gas.

(ii) Good organization, planning and preparation with full agreement of all concerned are essential for a successful purging project. The following factors must be decided upon:

(A) Equipment to be purged and how it should be separated.

(B) Inerts to be used, how obtainable, and how introduced and vented.

(C) Method for testing completeness of the purging and end point to be attained.

(D) Selection and assignment of a responsible supervisor and operating personnel.

(E) Preparation of a written "procedure," detailing the sequence of all operations

related to the purging, including the time of performance and estimated duration.

(iii) Selection of the time for performing the purging may be affected by many factors not directly related to the operation itself, such as: demands and loads, availability of personnel to perform the repair work or task for which the purging is undertaken, and weather conditions. It is desirable to start the purge operation at a time that will permit completion of purging, the introduction and removal of the inerts and the return to service of the system during daylight hours.

(iv) When more than one unit or piece of equipment is involved, the purging should be broken down into several successive operations, with their sequence definitely decided upon and their timing clearly calculated and scheduled. Each successive part of a large scale operation may well be considered a separate purging. It is important to set down the decisions reached in a written "procedure" which is definite as to consecutive steps. For instance, that no valve is left open when it should be closed or vice versa.

(v) After review and acceptance of the written procedure by the Fire Department, the purging supervisor may proceed with the selection of those required to assist in the operation. All should then be instructed together in the work to be done. Each [man] <u>person</u> should understand what he <u>or she</u> is to do and its importance in relation to the work others must perform.

(vi) Those selected to aid in the purging operation should have definite responsibilities. For example, one [man] <u>person</u> may be made responsible for the production and continuity of supply of inerts, a second, who has analytical and chemical testing training, responsible for the testing of the contents in or escaping from the purged chambers. These [men] <u>persons</u> should concentrate all their attention on their indicated duties and should not be expected to perform any

other tasks. As many other [men] persons as deemed necessary should be assigned for the general purging operations.

(m) Cooldown procedure

(1) Cooling down shall be limited to a rate and distribution pattern which will not cause allowable thermal stresses in the container and LNG piping to be exceeded.

(2) Cooldown shall be conducted by qualified and experienced personnel under the supervision of an engineer competent in this procedure.

(3) The container, associated piping and joints shall be under continuous surveillance to detect any failures or leaks.

(n) Pressure and vacuum control

(1) General. LNG containers and associated equipment and piping shall be provided with means of maintaining pressure and vacuum within design limits by admitting or discharging natural gas as needed. The means provided for the admission and release of gas as required in this subdivision (n) shall be acceptable to the Fire Department.

(2) Sizing. Sizing such pressure control devices shall include consideration of, (but not limited to), the following factors:

(i) For pressure

(A) Loss of refrigeration.

(B) Failure of a control device or other deviation from normal operation.

(C) Vapor displacement and flash vaporization including thermal roll-over during and subsequent to filling, and flash vaporization resulting from pump recirculation.

(D) Drop in barometric pressure.

(E) Exposure to fire or radiation from fire, or other heat source.

(ii) For vacuum

(A) Withdrawal of liquid at maximum rate.

(B) Withdrawal of vapor at maximum compressor suction rate.

(C) Rise in barometric pressure.

(D) Reduction in vapor pressure resulting from the introduction of sub-cooled LNG into the vapor space.

(3) Vents. In addition to the pressure control means required under the foregoing, LNG containers shall be provided with dual sets of direct acting pressure and vacuum vents communicating with the atmosphere, with each set sized for total relief. Fire exposure must be considered in the sizing of pressure relief vents.

(4) Vent calculations. Copies of venting and relief valve calculations for LNG storage tanks and equipment shall be furnished to the Fire Department.

(o) Vaporization

(1) General. There are various classifications of vaporizers. This subdivision (o) describes these classifications and their associated equipment.

(i) Heated vaporizers. Heated vaporizers are those vaporizers which derive their heat from the combustion of fuel, electric power, or waste heat and can be of direct fired, indirect fired, or remote fired.

(ii) Ambient vaporizers. Ambient vaporizers are those vaporizers deriving their heat from natural sources.

(iii) Process vaporizers. Process vaporizers are those which derive their heat from another thermodynamic or chemical process or in such a

fashion as to conserve or utilize the refrigeration from the LNG.

(2) Prohibited vaporizers. Flammable heat transporting mediums are prohibited for any type of vaporizer, except that natural gas may be used in derime heaters.

(3) Design and materials of construction. ASME Boiler and Pressure Vessel Code, Section VIII, Division 1, 1971 edition shall govern the design, fabrication and inspection of vaporizers. Materials used shall be suitable for the temperatures and pressures to which they may be exposed.

Vaporizer heat exchangers. Vaporizer heat exchangers shall be designed for a working pressure at least equal to the maximum discharge pressure of the LNG pump or pressurized container system supplying them, whichever is greater.

(4) Vaporizer and vaporizer piping valves

(i) Automatic equipment. Automatic equipment acceptable to the Fire Department shall be provided to prevent discharge of LNG or gas into a distribution system at a temperature above or below the design temperature of the sendout system.

(ii) Block valves. Manifolded vaporizers shall have both inlet and discharge block valves at each vaporizer.

(iii) Discharge and relief valves materials and construction. The discharge valve of each vaporizer and piping components and relief valves upstream of that valve shall be suitable for operation at LNG temperatures.

(iv) Inlet valves. In order to prevent a leak of LNG into idle vaporizers there shall be two inlet valves and a safe means of disposal of gas which may be trapped between them shall be provided.

(v) Heat source shut-off valves. Each heated vaporizer shall be provided with heat source shut-

off valves at the vaporizer and at a point at least fifty feet distant.

(vi) Vaporizer shut-off valve. The LNG line to each vaporizer shall be provided with a shut-off valve at least fifty feet distant from the vaporizer operable from a remote point and manually at its installed location.

(vii) Derime heater shut-off valves. If natural gas is used with a derime heater, shut-off valves shall be provided to both feed and discharge lines, located at least fifty feet from the heater.

(viii) Relief devices

(A) Each vaporizer and/or heater shall be provided with a safety relief valve providing an effective rate of discharge. Relief valve calculations shall be submitted to the Fire Department for review and acceptance and shall include allowance for pressures developed due to fire exposure. The relief valve capacity of vaporizers shall be such that the relief valve(s) will discharge 150% of rated vaporizer natural gas flow capacity without allowing the pressure to rise more than 10% above the vaporizer maximum allowable working pressure.

(B) Relief valves on heated vaporizers shall be located so that they are not subjected to normal operating temperatures in excess of their design temperature.

(5) Safety controls. In order to assure safe operation, heated vaporizers shall be provided with fully automatic, fail-safe controls, electrically classified by New York City Administrative (Electrical) Code to operate in hazardous atmospheres, to accomplish the following where applicable:

(i) Prepurge for 1 3/4 minutes with air or inert gas heat exchanges of combustible gases. Purge timer,

solenoid control pilot and fuel gas valves and ignition time limit switch to be provided.

(ii) Startup on low fire start by pilot only, with burners then lit by pilot as they open.

(iii) Monitor for process temperature, pressure and/or flow with shutdown if any parameter is exceeded.

(iv) Monitor flue gases with flue gas analyzer to detect gas or unburned fuel, also to report surplus oxygen.

(v) Shutdown on insufficient air. Combustion air blower and combustion air pressure switch to be provided for combustion air blower and fuel gas and combustion air proportional control valve to be provided.

(vi) Shutdown on electrical malfunction.

(vii) Shutdown on flame failure of pilot or burner.

(viii) Shutdown on high stack temperature (no restart possible until the temperature returns to normal operating temperature).

(ix) Vary burner gas and air input with LNG flow rate to maintain output process temperature within prescribed limits. (Automatic proportional temperature control).

(x) Alert manager of the plant in event the door is opened for any reason, by means of a tamper control with supervisory signal to be provided in the electrical panel box. (This is to guard against by-passing of controls by any operator).

(xi) Prevent over firing of unit by use of a combustion air blower designed with limited capacity.

(p) Piping

(1) Design and materials. General.

(i) Design. The design and fabrication of piping systems shall comply with American National Standard (ANSI) B31.3 "Petroleum Refinery Piping," except as modified by this subdivision (p).

(ii) Materials. All materials, including gaskets and thread compounds, shall be suitable for the temperatures to which they may be exposed, including fire. A materials list shall be prepared and submitted to the Fire Department for review and acceptance.

(2) Seamless pipe. Seamless pipe, only, shall be used for process and transfer piping handling LNG, flammable refrigerants, flammable liquids or gases, except that welded pipe may be used if seamless pipe is not available in the size required and if the weld and heat affected zone complies with ANSI B31.3 Subsection 3232.2 (impact tests) and is non-destructively examined in a manner acceptable to the Fire Department. Furnace lap-welded, furnace butt-welded or spiral-welded pipe is not acceptable for flammable gas, refrigerant or LNG. All fluxes used in welding shall be thoroughly removed.

(3) Threaded pipe. Threaded pipe shall be at least Schedule 80, but no threaded pipe over 2 inches nominal pipe size shall be used for flammable liquid or gas, and all such threaded joints used must be seal-welded, or sealed by other means acceptable to the Fire Department. No threaded pipe shall be used for cryogenic service.

(4) Thermal expansion. Thermal expansion shall be provided for by means of piping bends, loops or offsets. Expansion joints of the bellows, slip, and ball type are prohibited for lines handling flammable liquids or gases.

(5) Prohibited materials. A liquid line on a storage container, coldbox or other major item of insulated equipment external to the outer shell or jacket whose failure can release a significant quantity of flammable fluid shall not be made of aluminum, copper or copper alloy, or other material that has low resistance to flame temperatures.

(6) Prohibited fabrication. Socket welds on piping shall be prohibited except for branch connections not over 2

inches diameter; threaded pipe joints not seal welded, expanded, flared, compression, caulked, brazed and soldered joints are prohibited except as permitted in § § 23-03(p)(3) and 23-13(p)(7). Flange joints shall be held to a minimum. Butt-welded joints shall be used wherever possible.

(7) Pipe fittings

(i) General.

(A) Metals may be joined for cryogenic service by silver brazing. Silver brazing may be used on copper to copper joints, copper to copper alloys, and copper to stainless steel. Dissimilar metals may be joined by flanges or transition joint techniques which have been proven by test.

(B) The number of threaded or flanged joints shall be held to a minimum and used only where absolutely necessary, such as material transitions, instrument connections or where required for maintenance.

(C) Care shall be taken to insure the tightness of all bolted connections. Spring washers or other devices designed to compensate for the contraction and expansion of bolted connections during normal operating cycles shall be used where required.

(ii) Threaded nipples. Threaded nipples shall be at least Schedule 80.

(iii) Malleable iron. Malleable iron fittings are permitted only in auxiliary systems for oil, water, air, etc., and shall not be used to convey flammable refrigerants, gases, or liquids.

(iv) Plugs. Solid plugs or bull plugs made of at least Schedule 80 seamless pipe shall be used for threaded plugs.

(v) Flanges. Flanges shall be butt welded to the piping. All flanges shall be raised face and shall be concentric serrated in conformance with Manufacturers Standardization Society of the Valve and Fitting Industry, MSS-SP-6, 1963.

(8) Gaskets. Gaskets on piping conveying LNG, flammable refrigerants or gases shall be metal, metal jacketed or retained spiral wound.

(9) Prohibited conditions. The following practices and conditions shall be prohibited:

(i) Compression-type couplings shall not be used where they will be subjected to temperatures below minus 20 degrees Fahrenheit (minus 28.9 degrees Centigrade), unless such couplings meet the requirements of 318 of ANSI B31.3.

(ii) Threaded pipe shall be avoided for service temperatures below -20 degrees Fahrenheit. Where permitted, threaded joints shall be sealed as per § 23-03(p)(3).

(iii) No bends in fittings beyond those which are designed or fabricated into the fitting are permitted.

(10) Valves

(i) General. In addition to complying with ANSI B31.3, Section 307, valves shall comply with ANSI B31.5 or B31.8 or API 6D if design conditions fall within their scope.

(ii) Extended bonnet valves.

(A) Extended bonnet valves with or without bellows seals shall be used for service temperatures below -50 degrees Fahrenheit.

(B) Extended bonnet valves shall be installed with stems positioned above the horizontal.

(iii) Shut-off valves

(A) Shut-off valves shall be provided on all LNG, flammable refrigerant, flammable liquid and flammable gas containers, tank and vessel connections, except those for relief valves, those for liquid level gaging devices, and those that are blanked or plugged. Shut-off valves shall be located as close as possible to the containers or vessels they protect.

(B) The design and installation of an internal valve shall be such that any failure of the penetrating nozzle from outside stresses will be beyond the shut-off seats of the internal valve.

(C) The number of shut-off valves shall be the minimum required for safe and efficient operation.

(iv) Blocking and manual valves

(A) Required automatic blocking valves. Automatic blocking valves of "fail safe" type shall be installed in addition to manual valves to limit and isolate leaks, and to protect the plant in case of fire or other emergency, as follows:

(*a*) Natural gas feed line to the liquefaction system (where it enters plant).

(*b*) Natural gas feed line to the derime heater.

(*c*) LNG fill line from the cold box to the LNG container (at cold box).

(*d*) LNG withdrawal lines to booster pumps from tank (at the pumps, at the tank and at the dike).

(*e*) LNG feed line to the vaporizers (at vaporizer).

(*f*) Natural gas line outlet from vaporizers to sendout line (at vaporizer).

(*g*) Natural gas vapor boil-off line from tank to process area (near tank).

(*h*) Discharge line of refrigerant compressor.

(*i*) Additional valves for isolation shall be installed as required by the Fire Department.

(B) Automatic blocking valve operation and activation. These valves shall be capable of manual operation and shall operate automatically on:

(*a*) Detection of fire at tank, dike, vaporizer or process area or fire endangering the valve.

(*b*) Indication of over-pressure (beyond maximum operating pressure) or under-pressure (leak or rupture).

(*c*) Actuation of emergency shut-down system, manually, or automatically at process control house or other selected sites.

(*d*) Manual operation of natural gas control valve.

(v) Safety and relief valves

(A) Safety and relief valves shall be arranged to prevent damage. No shut-off valves are permitted in a line of relief. Relief valve settings shall be sealed.

(B) A thermal expansion relief valve shall be installed to prevent overpressure in any section of a liquid pipeline which can be isolated by valves. Thermal expansion relief valves shall be set to operate above the maximum normal operating pressure and less than the rated test pressure of the line it protects.

(C) Discharge from such valves shall be directed to minimize hazard to personnel and equipment. Flammable liquids and gases shall be discharged to the plant system connected to an operating flare stack.

(vi) Valve installation. Valves and other control valves shall be installed so that their operation will not be affected by icing.

(vii) Valve identification. Valves shall be identified at their locations by a number and where feasible a brief statement of its function.

(11) Pipe supports and piping insulation

(i) Pipe supports. Supports for piping shall be capable of withstanding a two-hour fire exposure except that supports subject to exposure to cryogenic liquid or essential to plant safety shall be capable of withstanding such exposure without excessive heat transfer which can affect piping restraints due to icing, or embrittlement of supporting steel, and to a fire of four hours duration.

(ii) Piping insulation. Piping insulation shall be of incombustible material; where space limitation or other conditions are such as to make the use of incombustible insulation impracticable, then insulation having a flame spread rating of 25 or less per ASTM-E-84 may be used, providing that such insulation is covered with at least two inches of incombustible material held in place by a metal

covering and stainless steel strapping when permitted by the Fire Department.

(12) Pipe identification. Process, fuel, high pressure steam, fire protection and other critical piping shall be identified by color coding, painting or labeling, subject to the approval of the Fire Department.

(13) Welding

(i) Certification of welders. Only certified welders shall be employed and certifications of welders filed with the Fire Department. Piping welders shall be certified by their employers after qualifying under Section IX-ASME Boiler and Pressure Vessel Code 1971, or Standard for Welding Pipelines (API Standard 1104) 1968.

(ii) Radiographic inspection. All welded joints on flammable liquid or gas piping shall be subjected to radiographic testing by an outside person or firm qualified to perform radiographic testing under Section IX-ASME Boiler and Pressure Vessel Code (1971) or API Standard 1104. Certifications on acceptance or rejection of each weld shall be filed with the Fire Department by the owner.

(iii) Visual inspection. All welded joints shall be subject to visual examination, over the entire O.D. and I.D. (with mirrors or other means), by the welding inspector employed by the owners.

(iv) Supplementary inspection. Supplementary examinations for soundness shall be made as required by the Fire Department of welds on pipe and fittings conveying cryogenic liquids, high heat and high pressure flammable liquids or flammable gases, and flammable refrigerants. These shall include:

(A) Ultrasonic over entire O.D. and/or

(B) Liquid penetrant over entire O.D. (for non-magnetic material), and/or

(C) Magnetic particle test for magnetic material.

(D) Welds shall be rejected for cracks and unworkmanlike welding.

(v) Practices and techniques. The following practices and techniques shall be observed:

(A) Scabs, slivers, seams, laps, tears, abrasions, and mechanical marks must be removed within the minimum wall thickness.

(B) When welding impact tested materials, qualified welding procedures shall be used to minimize degradation of the low temperature properties of the material.

(C) When welding to thin wall pipe, techniques shall be exercised to avoid burn-through.

(D) Electric arc or inert gas-shielded welding shall be used in piping for service below -20 degrees Fahrenheit.

(14) Weld identification. Weld identification markings for pipe which will be subject to service temperatures below -20 degrees Fahrenheit shall comply with the following:

(i) Marking shall be made with a material compatible with the basic material or with a round-bottom low stress die, except that materials less than one-quarter inch thick shall not be die-stamped.

(ii) Aluminum shall be marked with chalk wax-base crayons or marking inks containing organic coloring.

(15) Testing of piping

(i) Pressure tests shall be made of all piping in accordance with § 23-03(s) of these rules relating to the procedures. Carbon and low alloy steel

piping shall not be pressure tested at metal temperatures below 35 degrees Fahrenheit.

(ii) Such tests shall be made in the presence of a representative of the fire department and the written results thereof promptly filed with the fire department.

(iii) Records of such tests shall include clear identification of the piping, pressure, test medium, temperature thereof, ambient temperature, duration and shall remain a permanent record.

(16) Purging of piping systems. Purging of air or gas shall be done in a safe manner. ANSI B31.8, Section 841.285 may be used as a guide. Blow down and purge connections shall be provided to facilitate purging of process and flammable gas piping.

(17) Corrosion control

(i) Underground and submerged piping shall be protected and maintained in accordance with the principles of the National Association of Corrosion Engineers Standard RP-01-69 (1972 Revision), Control of External Corrosion of Underground or Submerged Metallic Piping System.

(ii) Precautions shall be taken for the protection of austentic stainless steel and aluminum alloys to prevent corrosion and pitting from corrosive atmospheric and industrial media during storage, construction, fabrication, testing and service. These media include but are not limited to chlorides and compounds of sulphur or nitrogen. Where insulation materials can cause corrosion of aluminum or stainless steel, suitable inhibitors or water-proof barriers shall be utilized.

(q) Instrumentation and electrical services

(1) Liquid level gaging. LNG containers. Each LNG container shall be equipped with approved liquid level gaging devices acceptable to the fire department.

(i) High level alarm. Each LNG container shall be equipped with approved liquid level alarm separate from the liquid level gaging device which will sound at the control house and at the marine unloading station when the liquid level is at 95 percent of the maximum filling height. In addition, a visible alarm shall be provided in the control board at the control house and marine station.

(ii) High level cut-off device. A high level cut-off device in addition to the alarm shall be provided to automatically reduce the flow of LNG to the container at 95 percent and cut it off at 98 percent.

(iii) Try cocks. No liquid try cocks are permitted.

(2) Liquid level gaging. Tanks for refrigerants and/or flammable process fluids. Each refrigerant and/or flammable process fluid tank shall be equipped with approved liquid level gaging devices acceptable to the fire department.

(i) High level alarm and cut-off device. Each storage tank shall be equipped with a liquid level gage and a high liquid level alarm and automatic cutoff as in § § 23-03(q)(1)(i) and 23-03(q)(1)(ii).

(ii) Try cocks. No liquid try cocks are permitted.

(3) Pressure gages

(i) LNG containers and other pressure vessels. Each LNG container and pressure vessel shall be equipped with a pressure gage connected to the container above the maximum liquid level. The LNG container shall also be provided with a pressure recorder.

(ii) Liquefaction systems. Pressure gages shall be placed upstream and downstream of process equipment where trace contaminants in the feed stream may deposit, as an aid to the scheduling of deriming operations.

(4) Vacuum gages. Vacuum jacketed equipment shall be provided with instruments for checking the absolute pressure in the annular space.

(5) Temperature indicators. Temperature monitoring devices shall be provided in various locations of the LNG Plant as follows:

(i) LNG containers. Temperature monitoring devices shall be provided in LNG containers to assist in controlling temperatures when placing the container in service and for calibrating liquid level gages.

(ii) Vaporizers. Vaporizers shall be provided with indicators to monitor inlet temperatures of LNG, outlet temperatures of vaporized gas and heating medium fluids and stack temperatures.

(iii) Liquefaction systems. Liquefaction systems shall be provided with temperature monitoring devices upstream and downstream of process equipment.

(iv) Foundations. Temperature monitoring equipment and heating cables shall be provided where foundations supporting cryogenic containers and equipment could be adversely affected by freezing or frost heaving of the ground.

(6) Additional instrumentation. In addition to the foregoing there shall be provided sufficient temperature measuring instruments for floor, inner tank wall, outer tank insulation, roof and hung ceiling, and other indicators such as wall movement transducers, strain gages, etc., that the Fire Department may require, to assure the prompt detection of an LNG leak or variation from the normal operating parameters in any container.

(7) Emergency shut-down

(i) Power or instrument air failure. Instrumentation for liquefaction, storage and vaporization facilities shall be designed so that in the event of power failure or instrument air failure the system will go into a "fail safe" condition until the system can be reactivated or secured.

(ii) Automatic shut-down. Provision shall be made for automatic shut-down of major items of equipment (e.g., compressors of a liquefaction facility, liquid send-out pumps and vaporizers and isolation valves), manually from several locations remote from the equipment and accessible in an emergency, and automatically in the event of fire detection or a major leak. In addition on fire detection, the emergency shut-down shall include automatic activation of the fire extinguishing system in the area of detection, and shall include automatic notification to the Fire Department via a central office. The emergency shut-down shall be accompanied by audible and visible trouble signal at the control house and sounding of the plant alarm.

(8) Electrical equipment

(i) General. Electrical equipment and wiring shall be of the type specified by and installed in accordance with the New York City Electrical (Administrative) Code and a certificate of inspection issued by the Bureau of Electrical Control shall be filed with the Fire Department. Where the New York City Electrical (Administrative) Code makes no provisions, NFPA Std. 70 shall apply. All alarm, detection, and communication systems shall conform to § 23-03(t)(7)(i)(B).

(ii) Secondary electrical power. A secondary source of electrical power shall be provided sufficient for LNG control, venting, plant shut down, operation of fire protection equipment (including fire pumps). Gas turbine or diesel drive may be accepted as satisfying this requirement. Such secondary power supply shall be so installed and arranged to provide for an uninterruptible switchover from primary to secondary power supply in case of primary power supply failure.

(iii) Electrical grounding. All tanks, piping, and equipment shall be electrically grounded.

(iv) Lightning protection. LNG storage tanks shall be protected against lightning in accordance with the New York City Electrical (Administrative) Code and NFPA Std. 78. An affidavit shall be filed to this effect with the Fire Department.

(v) Warning light. An explosion-proof red or amber warning light of adequate intensity shall be provided at the dome of the tank.

(vi) Stray currents. If stray currents may be present, or if impressed currents are used in loading or unloading systems (e.g., cathodic protection) protective measures to prevent ignition shall be taken in accordance with "Protection Against Ignitions Arising Out of Static Lightning and Stray Currents"- API-RP 2003 (1967). Particular attention shall be given to protection of underground lines and structures from accelerated corrosion, and the use of insulated flanges to prevent currents or use of bonding cables to prevent potential differences at pipe and equipment interfaces.

(vii) Lighting. Lighting of adequate intensity shall be provided for all parts of the plant including the access roads to, and in the plant, and such lighting shall conform to the New York City Electrical (Administrative) Code.

(r) Transfer of LNG and refrigerants

(1) Scope. This subdivision (r) applies to the transfer of refrigerants, flammable liquids and flammable gases between storage containers or tanks and points of receipt or shipment as permitted by pipeline, tank car, tank vehicle or marine vessel, with the following restrictions:

(i) LNG shall be received or shipped by Coast Guard approved marine vessel only, except where other means of transportation is permitted by the Fire Department.

(ii) Flammable or combustible liquids, gases, or refrigerants shall be received only by approved pipeline or permitted trucks complying with the

specifications of the Fire Department or by Coast Guard approved marine vessels.

(iii) Liquefied flammable gases shall be received only by Coast Guard approved marine vessels unless in containers complying with Subchapter 17 of Chapter 4 of Title 27 of the Administrative Code.

(iv) Non-flammable gases, whether liquefied or not, shall be received only in permitted trucks complying with the specifications of the Fire Department, tank cars or Coast Guard approved marine vessels.

(v) Transfer facilities shall comply with the appropriate provisions of these regulations relating to siting, piping systems, fire protection and instrumentation and to specific provisions of this subdivision (r).

(2) LNG compatibility. LNG being transferred into storage containers shall be compatible with that already in the container. Means shall be provided to prevent stratification which may result in rollover and extensive evolution of vapor. The means of accomplishing this objective shall be stated in the operating manual, which shall be acceptable to the Fire Department.

(3) Odorization. No gas in liquid or gaseous state shall be transferred into or out of the plant, effective January 1, 1979, unless it is satisfactorily odorized.

(4) Piping system. The transfer lines shall comply with the requirements of this subdivision (r).

(i) Blocking valves. Blocking valves shall be provided at the extremities of marine liquid transfer lines. The valves at the discharging end may be manually operated. The valves at the receiving end shall be capable of remote shutdown and provided with "fail safe" features.

(ii) Precooling. Provision shall be made for precooling transfer lines used to convey cryogenic liquids.

(iii) Check valves. Check valves shall be provided as required in transfer systems and located as close as possible to the point of connection to any system from which backflow can occur.

(iv) Vent line. A vent line of sufficient capacity shall be provided for LNG transfer lines, fabricated of cryogenically suited materials, connected to the high point of the transfer line and vented to the flare system.

(v) Supports. The liquid and vent lines shall be supported on incombustible supports. When steel is used, insulation shall be provided at points of contact. Cryogenic lines shall be insulated with incombustible insulation for personnel protection.

(vi) Vent valve and pressure gage location. Vent valves and pressure gages shall be provided equidistant along LNG lines at approximately 1000 foot intervals.

(vii) Transfer line fabrication. Transfer lines shall be fabricated of materials suited for the service intended, welded and 100 per cent of all welds radiographed; when radiography is not possible, other non-destructive tests may be used. Expansion loops may be installed with flanges and gaskets and made up with suitable stainless steel bolts. Piping shall conform to § 23-03(p) and stress level shall not exceed 40 percent of specified minimum yield strength.

(viii) Drains. A drain or bleeder valve shall be provided to empty piping after block valves are closed.

(ix) Pipe routing. Where piping passes under roadways, ramps shall be provided and suitable protection to protect the pipe from impact loads. Such protection shall be in the form of a steel casing so that the transfer piping can be monitored for leaks.

(5) Pump and compressor drive

(i) Suitability. Pumps and compressors shall be designed and tested for the service temperatures and pressures to which they may be subjected.

(ii) Signal lights. Signal lights shall be provided at the loading or unloading area to indicate when a remotely located pump or compressor used for loading or unloading is idle or in operation.

(iii) Parallel pumps. When pumps are in parallel, each pump suction and discharge line shall contain a block valve designed for at least the maximum operating pressure of the system. If centrifugal pumps are used, a check valve shall be placed between each pump discharge and the outlet block valve.

(iv) Shutdown devices. In addition to the locally mounted devices for shut-down of the pump or compressor drive, a remote device readily accessible to the certificate of fitness holder supervising the transfer shall be provided to shut down the pump or compressor in emergency. Remotely located pumps and compressors used for loading marine vessels shall be provided with controls at the loading area and at the pump or compressor site for shutdown.

(6) Marine shipping and receiving

(i) General. Design, construction and operation of piers, docks and wharves shall comply with the requirements of the Department of [Ports and Trade] Small Business Services and the U.S. Coast Guard.

(ii) General cargo. General cargo, other than ships stores for the LNG tanker shall not be handled over the pier within 200 feet of the transfer connection and no cargo shall be handled while LNG or flammable liquids are being transferred. Ship bunkering shall not be done simultaneously with LNG loading or unloading operations.

(iii) Vehicle traffic. Vehicle traffic is prohibited on the pier or dock while transfer operations are in

progress. Suitable warning signs and barricades shall be posted at all points of access to the pier when transfer operations are in progress.

(iv) Pipeline location. Pipelines shall be located on the pier in such manner that they are not exposed to physical damage from any source.

(v) Isolation valves and bleed connections. Isolation valving and bleed connections shall be provided at the loading or unloading manifold for both liquid and vapor return lines so that hoses and arms can be blocked off, drained or pumped out and depressured before disconnecting. Valves shall be located at the point of hose or arm connection to the manifold. Bleeds or vents shall discharge to a safe area such as the line to the flare stack.

(vi) Block valves. In addition to the isolation valves at the manifold, each vapor return and liquid transfer line shall be provided with a readily accessible block valve, on shore where the line approaches the dock or pier. Where there is more than one line, valves shall be grouped close enough for fast manual operation but not so dose that fire at one valve would endanger personnel required to operate the others. Valves shall be identified as to service. Valves shall be power operated from a remote point as well as manual.

(vii) Check valves. Pipelines used for liquid unloading only shall be provided with check valves adjacent to the manifold isolation valve.

(viii) Vapor return line. Either the vapor return line shall connect to the vessel's vapor return connection, or a safe means for vapor removal shall be provided.

(ix) Loading arms and hoses. Loading arms and hoses shall be constructed of material suitable for the product conveyed and the pressures to be encountered. Connections shall be capable of being disconnected quickly without product loss. Hoses shall be approved for the service and

designed for a bursting pressure of not less than five times the working pressure.

(x) Type of hose and pipe. Flexible metallic hose or pipe and swivel joints shall be used. Couplings shall be suitable for operating conditions and fabricated of durable materials.

(xi) Loading arm supports. Loading arms and hoses shall be adequately supported. The design of counter-weights shall take into consideration the formation of ice.

(xii) Hose testing. Hoses shall be tested at least semi-annually to the maximum pump pressure of relief valve setting and shall be visibly inspected before each use for damage or defects.

(xiii) Vessel transfer precautions. Prior to transfers, an English-speaking officer of the vessel in charge of cargo transfer and the shore terminal supervisor shall personally inspect their respective facilities to ensure that transfer equipment is in proper working condition. After being satisfied that their inspections disclose no defect or cause for concern, they shall agree on safe transfer procedures and review the emergency procedures, including verification of ship-to-shore communications.

(7) Additional precautions. In addition to the fixed fire protection required by these regulations the following precautions and procedures shall be followed in regard to marine loading or unloading of LNG:

(i) At least 72 hours before the arrival of any tanker or barge, the Coast Guard and the New York Fire Department shall be notified of the date, time and point of entering the Port of New York for the purpose of organizing an escort for the vessel, if required, or standby fire protection.

(ii) No loaded vessel shall enter the Port or traverse its waters after sundown or before sunrise, or in inclement weather without the approval of the

Coast Guard and concurrence by the Fire Department.

(iii) Except as permitted by the Coast Guard no loaded vessel shall enter the Port if hazard exists due to heavy traffic, congestion, or waterfront fires which endanger passage.

(iv) No vessel shall be docked for loading or unloading until inspected and certified by the Coast Guard.

(v) Except as permitted by the Coast Guard no vessel shall enter the Port under unfavorable tide conditions. Sufficient tug-boats to control the vessel shall be provided at all times.

(vi) Half-hourly patrols of the transfer line shall be made by operating personnel with certificates of fitness equipped with 2-way radio and portable dry chemical extinguishers and lights shall be available.

(vii) Means shall be provided at the pier to transmit an alarm to the Fire Department.

(viii) A dry chemical fire truck conforming to § 23-03(t)(4)(vi) with operating personnel shall be stationed on the pier near the LNG manifold, continuously during LNG transfer.

(ix) Vessels and loading arms shall be electrically bonded.

(x) Warning signs in lettering large enough to be seen from the channel shall be posted at each end of the pier or dock to inform approaching vessels of the transfer operation.

(xi) No vessel larger than 30,000 barrel capacity shall transfer LNG on a dead-end waterway.

(xii) A barrier acceptable to the Fire Department and the Coast Guard shall be provided on the water side of the barge or tanker to protect against

collision impact while docked. Such barrier may be of either permanent or temporary nature.

(8) Tank vehicle loading and unloading facilities

(i) Loading facility. Loading and unloading facilities shall comply with the applicable provisions of Chapters 1 and 4 of Title 27 of the Administrative Code and applicable provisions of the Zoning Resolution.

(ii) Tank vehicles. Tank vehicles shall load or unload flammable or combustible liquids only after they have been inspected and authorized by the fire department and when in charge of a person with a certificate of fitness.

(9) Pipeline deliveries of flammable or combustible liquids.

(i) Pipelines. Petroleum pipelines delivering flammable or combustible liquids to LNG plants or related facilities shall comply with the regulations of the fire department.

(ii) Storage tanks. Tankage for the storage of flammable or combustible liquids and/or petroleum products for LNG plants or related facilities shall comply with the applicable requirements of Subchapter 8 of Chapter 4 of Title 27 of the Administrative Code.

(10) Communications. Communications shall be provided at a loading or unloading location so that the operator can be in contact with other remotely located personnel who are associated with the loading or unloading operation and with the control house. Communication shall be by means of telephone, public address or two-way radio with audible alarm signals which can be heard throughout the plant actuated at the control house in case of emergency.

(s) Testing and testing procedures. Testing and testing procedures shall conform to the requirements of this subdivision (s).

(1) System testing. System and sub-systems of piping in the plant, previously tested hydrostatically or pneumatically, and equipment interconnected by such piping, will be

combined to form total integrated systems as dictated by process and plant operation conditions, and given a pneumatic holding test in the presence of a fire department inspector to assure tightness of the system and its joints. The test pressure for each system shall be the highest pressure possible (above operating pressure) which will not disturb relief valves at their normal settings, nor machinery seals, nor exceed equipment design limitations. Systems to be tested prior to any plant start-up operation shall include (but not be limited to):

(i) Natural gas pretreatment and liquefaction system

(ii) Natural gas boiloff, recondenser and recompression system

(iii) LNG product sendout system

(iv) LNG loading and unloading systems

(v) Vent header collection system

(vi) Instrument air system

(vii) Nitrogen purge system

(viii) Cooling water system

Test charts and affidavits covering these tests shall be submitted to the fire department.

(2) LNG containers 15 PSIG or less

(i) Initial container tests. The double and single roof containers operating at 15 psig or less shall be tested before placing in operation by filling with water to the top of the shell and applying an overload air pressure of 1.25 times the pressure for which the vapor space is designed. Container design shall be such that under such test conditions maximum fill shall not produce a stress in any part of the tank exceeding 80 percent of specified minimum yield strength or 50 percent of the specified minimum tensile strength of the material. In addition, the outer shell and roof test

procedure shall be in accordance with Q8.2.1 of API 620, Appendix Q, July, 1973.

(ii) Inner container retest. Inner containers shall be hydropneumatically tested every five years, or in lieu thereof metal containers may be tested by the Charpy Impact Test method as follows:

(A) As many samples as the fire department may deem necessary shall be cut from sheets of metal used in the construction of the container including a number of welded samples or other materials from which samples may be obtained are as follows: Concrete, prestressing steel, etc.

(B) Samples shall be placed in a basket and continuously immersed in LNG contained in the tank.

(C) Three samples shall be withdrawn in the presence of a representative of the fire department in accordance with the following schedule:

At the end of six months, one year, two years, three years, five years and every five years thereafter.

(D) On being withdrawn, samples shall be maintained at the proper temperature and tested promptly by a laboratory acceptable to the Fire Department. A report of the result in affidavit form shall be submitted to the Fire Department.

(E) This does not preclude the requirement for a hydropneumatic test at any time should the Fire Department feel the necessity thereof.

(3) LNG containers. More than 15 psig LNG containers operating at more than 15 psig, associated vaporizers and piping shall be tested hydrostatically, prior to being placed in operation, and every five years thereafter at two times the maximum operating pressure, except that if the

resultant test pressure would exceed 300 psi the test pressure shall be reduced to 1 2/3 times the maximum operating pressure.

(4) Pneumatic pressure testing of containers. The following steps should be observed when performing a pneumatic pressure test:

(i) Apply to the enclosed space above the water level an air pressure equal to 1.25 times the pressure for which the vapor space is designed.

(ii) Hold test pressure for 1 hour.

(iii) Reduce air pressure to equal design pressure.

(iv) Above the water level, check with soap film, linseed oil, or other suitable material all welded joints, all welds around openings, and all piping joints against which the pneumatic pressure is acting. A visual inspection may be substituted for the soap film inspection of the welded joint if previously checked with liquid penetrant or with a vacuum box. The soap film inspection shall still be made, above the water level, of all welds around openings, all piping joints, and the compression ring welds including the attachment welds to the roof and shell. This shall be required on original test and may be required on retests where leaks are suspected.

(v) Check the opening pressure or vacuum of the pressure and vacuum relief valves by pumping air or nitrogen above the water level and releasing the pressure, followed by a partial withdrawal of water from the tank.

(vi) Recheck and retighten the anchor bolts, if provided, after the tank has been emptied of water and is at atmospheric pressure.

(vii) Apply air pressure, equal to the design pressure, to the empty tank and check the anchor bolts, if provided, and foundation for uplift.

(viii) Inspect all welded seams in the bottom and the corner weld between the shell and bottom, by means of a soap film and vacuum box test in initial testing.

(5) Piping

(i) Hydrostatic testing and alternates. Piping shall not leak when hydrostatically tested in the presence of a representative of the fire department for one hour at 200 percent (2X) maximum operating pressure or 100 psi whichever is greater. In lieu of a hydrostatic test, cryogenic piping, instrument air piping, derime system and dry chemical systems piping shall not leak when tested pneumatically (in conjunction with a soap and halide test) for one hour, as follows:

(A) External cryogenic piping (outside of cold box)-200 percent of design pressure (minimum 100 psi).

(B) Internal cryogenic piping (inside of cold box)-150 percent of design pressure, but not less than 200 percent of operating pressure (minimum 100 *psi*).

(C) Instrument air piping-200 percent of design pressure (minimum 100 *psi*).

(D) Derime system-200 percent of design pressure (minimum 300 psi).

(E) Dry chemical piping-150 percent of design pressure but not less than 200 percent of operating pressure (minimum 100 psi).

(F) Transfer lines and arms for LNG-200 percent of operating pressure (minimum 200 *psig*).

(ii) Pneumatic testing-piping. Pneumatic testing shall be conducted as follows:

(A) Introduce air or dry nitrogen into the system and raise pressure to 50 psi to

determine if major leaks exist. Repair any leaks found.

(B) Release the pressure in the system. Introduce freon up to 15 psi. Admit air or nitrogen and raise the system to the proper test pressure.

(C) Inspect the system for leaks with a soap solution and then with halide (freon) leak detector. Repair leaks found at this time, and retest.

(D) Upon completion of steps (A), (B), (C) above apply the pneumatic holding test at the prescribed test pressure for one hour. This test to be witnessed by a representative of the fire department.

(E) At conclusion of test, piping and associated equipment shall be purged with nitrogen.

(F) Soap and halide tests may be witnessed or spot-checked by a fire department representative but all pressure tests shall be witnessed.

(G) Affidavits shall be submitted at the conclusion of each test certifying that each has been carried out according to the requirements of the fire department.

(6) On-site tests. All on-site tests shall be witnessed by a representative of the fire department and test charts, and affidavits submitted.

(7) Fire protection systems. Operational tests of all fire protection systems shall be made in the presence of a representative of the Fire Department including but not limited to:

(i) Yard hydrant systems

(ii) Sprinkler and deluge systems

(iii) Fire pumps

(iv) Dry chemical and foam systems

(v) Fire detectors and alarm systems

(vi) Combustible gas detectors and alarm systems

(vii) Plant fire trucks

(viii) Emergency shutdown systems as described in § 23-03(q)(7)

(ix) Electrical and communication systems

(x) Leak detection and alarms

(t) Fire protection and safety. This section covers the minimum equipment and procedures required to control, extinguish and minimize the effects of fires and leaks or spills of LNG, flammable refrigerants, liquids or gases and are in addition to previously stated requirements for dikes, impounding areas, blocking valves or other similar provisions.

(1) Basic fire protection

(i) General. The basic fire protection consists of the following:

(A) Yard hydrant systems

(B) Water sprinkler and deluge systems

(C) Dry chemical systems

(D) Foam systems where required

(E) Special extinguishing systems where required

(F) Alarm systems for detecting combustible gas and fires and means for notifying the Fire Department

(G) Emergency shut-down (see § 23-03(q)(7))

(H) A trained fire brigade

(I) A training manual and pre-fire plan

(J) Control of ignition sources

(ii) Periodic testing. Operational retests of fire protection systems shall be made annually, witnessed by a representative of the Fire Department.

(2) Yard hydrant systems. Every LNG facility shall be protected by a system of yard hydrants with hose provided throughout, including marine transfer locations, installed, tested and approved in accordance with the requirements of the Administrative (Building) Code, except, that when it is proven to the satisfaction of the Fire Department that due to the nature of the soil, excessive corrosion of mains will occur, piping fabricated of corrosion resistant material such as asbestos cement pipe may be accepted, but the code requirements for test pressure shall be maintained. Hydrants shall be fed from a minimum 10" looped main. Monitor nozzles shall be located as required by the Fire Department. Systems shall be wet, maintained at a pressure not less than 50 *psig* at all times, and capable of being raised by the plant fire pumps to a greater operating pressure of at least 125 *psig* or other pressures designated by the Fire Department.

(i) Hydrants. Hydrants shall be of the "New York City" type with two 2 1/2" Fire Department male threaded outlets with hydrant spacing according to the Administrative Code, except that hydrants and mains shall not be placed within impounding areas.

(ii) Water supply. Where the water supply is from salt water, no connection to a city water main is permitted.

(iii) Fire pumps

(A) General. Fire pumps shall be installed in a water pump house and shall be of sufficient capacity to supply all anticipated

needs of the water systems required by the Fire Department.

(B) Power sources. At least two fire pumps having alternate power sources, one of which shall be electrical, shall be provided.

(C) Fire pump house location. The fire pump house shall be located as remotely as possible and in accordance with the distances as shown in Figure 1, § 23-03(c)(1).

(D) Fire pump house protection. The pump house shall be of in and/or combustible construction and protected by an outside deluge system designed to maintain the interior temperature at a level no higher than can be endured safely by a pump operator and the pumping and electrical equipment.

(iv) Salt water supply. When the hydrant supply is salt water, the salt water supply shall be taken from coffer dams and inlets thereto protected by noncorrodible mesh screens capable of screening out all debris over 1/2" in cross-section. Such screens shall be removable for cleaning.

(v) Drafting site. Adjacent to the salt water pump house, a drafting site shall be maintained for the use of the largest Fire Department pumper. Such site shall be built according to the requirements of the Fire Department. Suction connections shall be 12" plain for superpumper use and 4 1/2" male New York Fire Department threaded for regular land engines.

(vi) Drafting site manifold. A manifold shall be installed at the drafting site whereby the Fire Department may augment the yard salt water hydrant system by a land engine. The manifold design shall include eight 4 1/2" female swivel inlets and four 3" female swivel inlets (New York Fire Department threads).

(vii) Fireboat facilities. Provision shall be made for mooring a New York City fireboat as near as possible to the salt water pump house, subject to the approval of the Fire Department and a manifold consisting of six 3 1/2" Fire Department threaded, female swivel, valved connections shall afford the capability of augmenting the yard hydrant system by a fireboat.

(viii) Land engine facilities. At least two siamese connections, with Fire Department threads, each having two or more 3" female swivel inlets with New York Fire Department threads, shall be provided for use by land engines for any yard hydrant system fed by City water. Owing to variable site conditions the proposed location of these siamese connections shall be submitted to the Fire Department for approval.

(ix) Check valves. Check valves shall be installed in all inlets to the system.

(x) Sectional valves. The yard hydrant system shall be provided with sectional valves in a manner satisfactory to the Fire Department, so that it can be utilized even if part of the piping is out of service.

(3) Water sprinkler and deluge systems. Based on radiation studies noted in § 23-03 (c)(1), exterior sprinkler systems shall be provided for buildings which could become untenable or where equipment could be damaged or rendered inoperable in event of a major LNG fire, e.g.: Control house, compressor, fire pump house, fireboat connection, drafting site, and any building or location normally occupied or which requires personnel to be at their posts in emergencies.

(i) System operation. Each system shall operate automatically on fire detection anywhere in the plant when the ambient temperature on the outer face of the building reaches 135 degrees Fahrenheit. Each system shall be capable of remote manual operation.

(ii) Tests. Operational and hydrostatic tests (at 200 psi) of all sprinkler, and deluge systems shall be witnessed by a representative of the Fire Department before acceptance.

(iii) Interior sprinkler system. Buildings in which combustibles or inflammables are stored, including warehouses and garages, shall be protected by an interior sprinkler system, when within 500 ft. of any LNG storage or process equipment.

(iv) LNG container deluge system. Every LNG container or tank required by these regulations to be bermed shall be protected by a water deluge system completely encircling the roof at the top of the berm. This system shall have a two-fold purpose:

(A) To reduce the effect of radiated heat to exposures in the event of fire in the tank.

(B) To reduce the effect of radiated heat from another tank or tanks in a complex.

(v) Nozzles. The number and arrangement of nozzles and the associated piping shall be subject to the approval of the Fire Department and based on radiation studies. Water supply shall be sufficient, and the pattern of distribution such that the protected equilibrium temperatures will be achieved to the satisfaction of the Fire Department.

(vi) Water deluge operation. The water deluge systems for LNG containers shall operate automatically when fire detectors react to fire in the tank or any tank or diked area, or the marine transfer area. For other areas, an override permitting a delay not exceeding five (5) minutes may be provided for operation of the water deluge systems. All systems shall be capable of remote manual operation from the control house and near the system.

(4) Dry chemical systems. In all matters not specifically provided in this subdivision (t), NFPA Std. 17, 1972, shall apply.

(i) System design

(A) Systems shall be designed for a minimum flow rate of .035 pounds per second per square foot and a minimum time of discharge of 30 seconds.

(B) Systems shall be engineered for each of the areas to be protected and plans filed with the Fire Department together with design and experimental data relative to range and effectiveness.

(ii) Typical areas. Typical of areas requiring fixed dry chemical systems are:

(A) LNG tank pump discharge

(B) Vent gas compressors

(C) Vent area of tank roof

(D) Vaporizer booster pumps

(E) Liquefaction unit and gas treatment unit

(F) Vaporizer and regenerator heater areas

(G) Marine loading arm areas

(H) Loading and unloading areas

(I) Run-off ditches and impounding areas

(J) Other areas requiring fixed dry chemical protection shall be as specified by the fire department, and may be either automatically or manually activated. Hose lines connected to fixed systems shall be provided for manual use, where designated by the fire department.

(iii) System operation

(A) Except as may be otherwise provided for in systems required under § 23-03(t)(7)(iv)(D) and systems required under § 23-03(t)(4)(ii)(J), dry chemical fire extinguishing systems shall be actuated automatically immediately on fire detection without time delay or overrides. On actuation of the dry chemical system a visual and audible alarm signal shall be transmitted which will identify the system in operation. Each system shall be capable of remote manual operation, near the system and at the control house.

(B) Operational and pneumatic tests shall be made of all equipment in the presence of a representative of the fire department.

(iv) Piping protection. Buried piping shall be wrapped, cathodically protected and have a minimum earth cover of three (3) feet or be otherwise protected against mechanical injury, fire or contact with LNG. Where piping passes under roads or ramps it shall be suitably protected with steel casings.

(v) Nozzles. The number and type of nozzles shall be selected to provide complete coverage of the area or zone protected with the required concentration of dry chemical in conjunction with the data required to be submitted under § 23-03(t)(4)(i).

(vi) Fire truck (dry chemical). Dry chemical. A dry chemical mobile, self-powered or trailer type with dedicated tractor, fire truck shall be provided for support operation of automatic systems and/or flexibility of operations in controlling LNG or surface Class A, B and C fires throughout the plant, in accordance with the following criteria.

(A) Truck capacity. The design of the truck and dry chemical unit shall be acceptable to the Fire Department, but shall be not less than 4000 pounds dry chemical

capacity. The dry chemical used shall be of the type, and compatible with the discharge rate used in the fixed systems.

(B) Truck Equipment. The truck shall be outfitted with such equipment that it will be a self-sufficient unit; e.g., hose, nozzles, tools, lights, self-contained breathing apparatus, and extinguishers for handling small fires of the Class A, B and C types.

(vii) Truck Operator

(A) A qualified fire truck operator shall be on duty at all times without exception and the truck shall be stored indoors where it is easily accessible to the assigned personnel.

(B) All operating employees shall be regularly drilled and trained in the operation of the vehicle and equipment.

(C) The person in charge of the mobile unit shall obtain a certificate of fitness from the fire department.

(viii) Truck reservation. The truck shall not be taken off the property except for major repairs in which event the fire department shall be immediately notified.

(ix) Truck connection to fixed piping. Where the area protected by a fixed system is physically beyond the reach of hand hose lines from the mobile truck, an inlet to the fixed piping system shall be provided whereby the truck dry chemical unit can augment the system.

(x) Portable extinguishers. Such portable and wheeled dry chemical extinguishers shall be strategically located throughout the plant as may be required by the fire department. A program for monthly inspection and required recharging shall be established.

(5) Foam systems

(i) General

(A) For the protection of pipe ditches and other impounding areas of limited size, a high expansion foam system may be installed in addition to dry chemical, with the concurrence of the fire department.

(B) In all matters not specifically provided in this subdivision (t), NFPA 11A 1970, High Expansion Foam Systems, shall apply.

(ii) Foam system capability. The foam system shall be capable of producing foam at a 500:1 ratio with discharge at an initial rate to cover the hazard to a depth of 5 feet within two minutes, except where other ratios and/or rates are acceptable to the fire department. A maintenance rate after the initial two minutes, shall be required to maintain a foam blanket over the dike or impounding area, assuming a steady state evaporation rate of 0.01 inch per minute of depth of LNG liquid in the dike or impounding area.

(iii) Foam system supplies. Sufficient foam concentrate shall be provided to permit continuous operation as per § 23-03(t)(5)(ii) plus a 50 percent reserve. Foam concentrate shall not be stored beyond its shelf life expectancy. Foam concentrate shall be stored and maintained at temperatures between 35 degrees Fahrenheit and 120 degrees Fahrenheit except where a low temperature foam concentrate has been approved.

(iv) Foam compatibility with dry chemical. The foam concentrate shall be compatible with dry chemical used to suppress LNG fires.

(6) Special extinguishing systems. Special extinguishing systems such as Halon 1301 or carbon dioxide may be used in certain locations acceptable to the fire department, and also under the conditions set forth by the fire department.

(7) Alarm systems

(i) General

(A) Alarm systems shall be designed so that every portion of the area protected is under surveillance by the scanning or detecting devices, and shall be automatic in operation in that the device shall set in motion, without manual assistance, the fire extinguishing systems designated for the area. If it becomes necessary to take any system off automatic; e.g., for repairs or alteration, the fire department shall be immediately notified.

(B) Every alarm system shall be connected to the fire department via a central office, and the fire department shall be notified immediately of the transmission of an alarm. This means that the transmission of an alarm shall be followed by a telephone call from the control house to the fire department by using telephone number assigned by the fire department.

(C) All alarm systems shall be closed circuit electrical, and fail-safe for pneumatic components.

(D) Plans for every alarm, detection, and communications system shall be submitted to the fire department for approval, and acceptance of systems shall be subject to an operational test and inspection of the systems by the fire department.

(ii) Alarm boxes. Manually operated alarm boxes, in the number and locations specified by the fire department, shall be incorporated into the alarm system.

(iii) Combustible gas detector system

(A) General operation. A combustible gas detector system shall be provided which

shall sound an audible alarm at the location and a visual and audible alarm at the control house at 25 percent of the lower explosive limit. At 50 percent LEL emergency shutdown shall be initiated automatically placing the plant in "fail-safe" condition with simultaneous transmission of an alarm to the central office. These limits shall apply except as otherwise specified in § 23-03(g)(2)(ii)(A).

(B) Combustible gas detector locations. Combustible gas detectors shall be provided at the following typical locations (as well as additional locations required by the fire department upon examinations of plans).

((*a*)) Control and auxiliary room

((*b*)) Compressor rooms

((*c*)) Liquefaction equipment

((*d*)) Gas treating equipment

((*e*)) Vaporizer booster pumps

((*f*)) Vent gas compressors

((*g*)) LNG pumps

((*h*)) Tank vents

((*i*)) At base of tank (at least one detector in each quadrant)

((*j*)) At intervals along runs of LNG piping

((*k*)) Marine transfer points

((*l*)) Customer loading stations

((*m*)) High pressure gas inlets and outlets

(iv) Fire detection system

(A) General operations.

((*a*)) A fire detection "closed circuit" system utilizing approved devices and equipment shall be provided throughout the plant which will give an audible and visual alarm in the control house, and indicate the location, and an audible alarm throughout the plant.

((*b*)) Such systems shall automatically actuate the fire extinguishing systems in the area involved, trip the plant to "fail-safe" and transmit an alarm to the fire department via an approved central office connection.

(B) Fire detectors. Ionization type or ultra violet detectors shall be used in buildings and ultra violet types outdoors. Other types of detectors acceptable to the fire department may also be used.

(C) Detector locations. Fire detectors shall be provided at the following locations (in addition to others which the fire department may require on examination of plans).

((*a*)) Control and auxiliary rooms

((*b*)) Compressor rooms

((*c*)) Liquefaction equipment

((*d*)) Gas treating equipment

((*e*)) Vaporizer booster pumps

((*f*)) Vent gas compressors

((*g*)) Vaporizers

((*h*)) LNG pumps

((*i*)) Tank vents

((*j*)) At intervals along runs of LNG piping

((*k*)) Marine transfer points

((*l*)) Customer loading stations

((*m*)) High pressure gas inlets and outlets

(D) Detector shielding. Where it is impossible or impracticable to shield fire detectors from spurious responses, consideration shall be given to the following options which shall be subject to approval of the fire department for each area protected.

((*a*)) Shielding of detectors

((*b*)) Installation in pairs, positioned to survey the protected area, and requiring response of both to a source of flame. Response of one detector alone shall only alarm but shall not initiate fire protection system or emergency shutdown.

((*c*)) Provision of a ten second delay which would require maintenance of the activating light source for ten seconds before initiating the alarm and extinguishing system (this is intended to prevent operation by a lightning flash or momentary reflected light).

(8) Trained fire brigade

(i) General. In every LNG facility a full-time fire brigade shall be maintained consisting of operational employees thoroughly trained in the use of fire extinguishing equipment and tools and in the operation of the facility.

(ii)

(A) Safety director. An individual responsible for overall plant safety shall be employed, whose duties include:

((*a*)) The correction of fire hazards which are brought to his <u>or her</u> attention in any manner.

((*b*)) The training of the fire brigade and responsibility for its manpower and efficiency.

((*c*)) The organization of a training manual which shall emphasize operational safety in every area of the plant.

((*d*)) Pre-fire planning, details of which shall be developed through liaison and regular combined drills with local fire department units under the supervision of the local deputy chief.

((*e*)) Maintenance of records of drills, training, lectures, incidents of any emergency nature, and copies of reports forwarded to supervisors. [He] <u>The safety director</u> shall insure that an immediate report [be] <u>is</u> sent by telephone of every fire, leak, or spill, to the Bureau of Fire Prevention and follow with a written report. This shall be in addition to the normal transmittal of an alarm.

((*f*)) Establishment of a regular maintenance program for fire protection equipment, supervision of all maintenance and repair work to verify compliance with fire regulations. [He] <u>The safety director</u> shall have the authority

and duty to stop all work being done in violation of fire department or company safety regulations.

(B) Safety director selection. The safety director shall be selected on the basis of experience consisting of at least five years experience in a paid fire department, or in industrial fire protection and safety in a gas plant or bulk petroleum terminal or chemical refinery or in fire protection engineering or related fields.

(C) Safety director's responsibility. The safety director shall be responsible to, and subject only to authority of top management; e.g., vice president status, in the performance of his or her duties.

(D) Certificate of fitness. The safety director shall obtain a certificate of fitness from the Fire Department qualifying him or her in this capacity and in the knowledge and operation of all protection systems.

(iii) Deputy safety directors. As many deputy safety directors shall qualify and be certified as are necessary to ensure that a Deputy Safety Director will be on duty at all times when the Safety Director is off duty.

(iv) Fire brigade

(A) The fire brigade on duty at all times shall be selected so that a sufficient number is on duty to operate vital controls, start up fire protection systems should automatic devices fail, transmit alarms, secure the plant, extinguish incipient fires, and place equipment back in service when no longer required. In no case shall less than three [men] persons be on duty at any time.

(B) A daily roster of members of the brigade in each shift shall be maintained, and

every brigade member shall be aware of his or her assigned post and duties.

(v) Protective clothing. Protective clothing and asbestos suits shall be provided for all members of the brigade on duty. Additional asbestos suits or similar equipment shall be provided, as required by the Fire Department.

(9) Training manual and pre-fire planning

(i) Training manual. A training manual for the fire brigade shall be submitted by the safety director to the Fire Department for acceptance.

(ii) Composition of manual. The manual shall consist of the following:

(A) Table of organization showing chain of command and levels of responsibility.

(B) Drill schedule showing areas of plant, dates and times and showing that all members on duty must participate.

(C) Standard drill operations, a short description of equipment and manpower requirements, and the objective.

(D) Pre-fire plans and actions to be taken in the event of fire, explosion or spills; e.g., a major leak in a tank, a leak in an LNG transfer line, a fire at the pier during unloading, or a compressor explosion.

(E) Provision for first aid training.

(F) Description of all fire safety systems, alarms, extinguishers, methods of operation and regular maintenance and tests.

(G) Applicable fire department regulations, re: welding, open flames, smoking, housekeeping, etc.

(H) Emergency telephone numbers of City Departments, Coast Guard, and company personnel to be called.

(I) A final color-coded composite drawing showing all fire protection systems. In addition, copies of the drawing shall be provided for all fire department units charged with responsibility relative to the plant.

(10) Control of ignition sources

(i) Smoking, welding and hot work. Smoking, or the carrying of lighted cigars, cigarettes or pipes, and the use of non-process open flames within the plant area shall be prohibited with the following exception:

(A) Smoking may be permitted in areas designated by the Board of Standards and Appeals under such conditions as it may impose.

(B) Welding, cutting, and similar operations may be conducted at times and places specifically authorized by the Safety Director. No contractor shall be permitted to proceed with any repairs, alteration, or fabrication except under the authority of the Safety Director who shall see that all required permits or approvals have been obtained from the Fire Department, Department of Buildings, and/or Department of [Ports and Trade] Small Business Services.

(C) No welding, cutting, or similar *hot work*, or any repair, alteration, or testing shall proceed except when conforming to the provisions of applicable regulations of the Fire Department, Department of Buildings, and/or Department of [Ports and Trade] Small Business Services.

(ii) Prohibited use at LNG spills or leaks. The use of equipment, tools, or heating devices which are not approved for use in combustible atmospheres shall not be used in those areas where LNG has spilled or leaked.

(11) Housekeeping. Good housekeeping for fire prevention, containment and access shall be maintained with emphasis on the following:

(i) No rubbish, or brush shall be permitted to accumulate.

(ii) Storage shall be confined to storehouses, closets, lockers, or other approved locations.

(iii) Roadways shall be kept clear-no parking shall be permitted except in parking areas provided for employees, outside contractors, visitors, etc. Such parking areas shall be in locations acceptable to the Fire Department.

(iv) Dikes and berms shall be maintained at prescribed heights and contours.

(v) Employees shall be directed to report all defects, malfunctions, breakdowns, and evidence of deterioration to superiors for correction.

(12) Repairs, alterations, inspections, and entries. All repairs, alterations, inspections, and entries by personnel into any vessel, tank, or container which has contained any flammable gas or liquid shall be made under inert atmospheric conditions as determined and certified by a Marine Chemist possessing a valid certificate issued by the National Fire Protection Association in accordance with NFPA St. 306-1972, after his <u>or her</u> personal examination and testing. Such certification shall be made daily before start of any work in the vessel.

(u) Requirements for Plans, Approvals, Affidavits and Documentation. Specific data is required by the Fire Department to support certification of LNG facilities.

(1) General requirement for permit. No permit or permission to operate an LNG facility to load or unload a container

or vessel will be granted until the Fire Department is satisfied through approval inspections and the acceptance of required documentation that the regulations are complied with and no undue hazard exists. "Risk Analysis" of equipment or procedures shall be submitted as directed by the Fire Department.

(2) Professional engineer-of-record. The owner shall appoint a professional engineer-of-record who shall have authority to act as liaison with the Fire Department, file documents, comply with the Fire Department's requirements, file required reports and exercised resident supervision over construction, repair or modification and operation, during planning and construction and for a period of five years from completion.

(3) Data submittal schedule. Plans, approvals, affidavits, documentation and other data shall be submitted on a schedule which will permit adequate review by the Fire Department and in accordance with the following paragraphs of this subdivision (u).

(4) Planning phase data. The following data shall be provided to support review of the Owner's application for approval of a LNG Project with New York City. Fire Department recommendations to the Board of Standards and Appeals, or other authorized agency for approval of this application, will be based on analysis of this data.

(i) Proposed site plan. A proposed site plan shall be filed with the Fire Department indicating all major characteristics of the site, showing plant buildings, tanks, containers, dikes, process areas, transfer areas, major LNG piping lot lines, shore lines, and exposures within 1500 feet of lot lines. Such aerial photos as the Fire Department may require shall be included. Site plans shall include underground channels, conduits and such, as well as pipelines, drainage ditches and similar channels.

(ii) Description of facility. A complete description of the facility shall be filed with the proposed site plan. It shall indicate the proposed quantities and methods of receiving, storing, processing and distributing LNG within the facility. A detailed

analysis of the product to be stored shall be included. Fire protection, safety and operational control systems shall be indicated with statements as to the basis upon which each were selected.

(iii) Thermal radiation and vapor dispersion study. A thermal radiation and vapor dispersion study shall be submitted, prepared by recognized experts in thermodynamics selected by the owner and acceptable to the Fire Department. The study should include vapor dispersion characteristics resulting from spills caused by total failure modes of the storage tanks, or equipment or piping. The radiation study should assume an entire tank or group of tanks are involved in a fire and should show equilibrium temperatures within a radius of 1500 feet of the tank, at wind velocities of 0, 30 and 60 mph, at points where R 1500 feet, 1200 feet, 1000 feet, 800 feet, 600 feet, 500 feet, 400 feet, 300 feet, 200 feet and 100 feet from flame surface. Attention shall also be given to the possibility of local overheating and fires in impounding areas.

(iv) Fire prevention criteria document. A Fire Prevention Criteria Document shall be submitted as a companion document to the Proposed Site Plan and the Description of Facility. It shall contain the criteria by which the owner plans to meet the requirements of this regulation and all other requirements of the Fire Department. The document shall be maintained throughout the plant construction and start-up phase reflecting all major requirements of the Fire Department. Criteria shall be organized by plant and fire protection systems and shall include the following:

(A) Design and performance criteria

(B) Test plans and procedures

(C) Training requirements and plans

(D) Operational plans and procedures

(E) Compliance approvals and affidavits

(5) Design phase data. The following data shall be provided to support review of the Owner's application to build a LNG plant within New York City. Fire Department recommendations to the Department of Buildings or Department of [Ports and Trade] Small Business Services for approval of the building permit(s) will be based on the analysis of this data.

(i) Construction drawings

(A) The Fire Department shall have access to all site plans, construction drawings, equipment drawings, installation drawings, specifications and other data utilized by the Contractor(s) for construction of the plant. The Fire Department shall be provided, on request, copies of the above data required for their reviews and analysis, and plans shall be filed for approval with the Department of [Ports and Trade] Small Business Services or Department of Buildings.

(B) Copies of venting and relief valve calculations for LNG storage tanks shall be furnished.

(C) Data on power needs and secondary power capacity to provide power for LNG control, venting, plant shutdown, fire protection systems (including fire pumps).

(D) Plans showing locations and construction of Fire Department siamese, manifolds, suction connections, hydrant systems, dry chemical systems, water spray systems, foam systems, gas and fire detectors, alarm and communication systems shall be submitted to the Fire Department for acceptance.

(ii) Process report. A process report shall be filed with the Fire Department (Bureau of Fire

Prevention), for review; such report shall contain the following:

(A) Process information on incoming feed gas treatment, refrigeration, liquefaction, vaporization, deriming, and odorization.

(B) Basis for approval of all equipment used with reference to the standards of construction, e.g., ASME, ANSI, Chapters 1 and 4 of Title 27 of the Administrative Code.

(C) Suitability of materials of construction for the pressures and temperatures to be encountered by equipment, piping, valves, and insulation.

(D) Adequacy of safety features, including temperature and pressure relief, instrumentation and control panels, emergency shutdown and fire shutdown devices, isolation valves, dump tanks, flare stacks, electrical equipment and test procedures.

(E) Plot plan showing location of each piece of equipment, valves, piping, safety devices, instrumentation, etc., and distances between equipment, tank, property lines, open flames, etc.

(F) Flow charts which shall show all equipment, safety devices and instrumentation with pressure and temperature at all points to be indicated.

(G) Equipment summary sheets or charts for each piece of equipment, safety and relief device, valve, piping, etc., indicating its function, operating pressure and temperature, material of construction, insulation and safety devices.

(H) Relief device calculations shall be included as well as supporting ASME and manufacturers' affidavits.

(I) A final color-coded composite line drawing showing all equipment in the fire protection systems. In addition, copies of the drawing shall be provided for all fire department units charged with responsibility relative to the plant.

(iii) Fire protection report. A manual for training the fire brigade shall be submitted for acceptance by the Fire Department. The data manual shall designate and include the duties of the Safety Director, Deputy Safety Director, fire brigade personnel. It shall describe the functions, operations, maintenance and tests required for all fire protection and prevention in the facility. A final color-coded composite line drawing showing all equipment in the fire protection systems shall be provided. Copies of the drawing will be provided to all Fire Department units charged with responsibility relative to the plant.

(6) Design compliance, approvals and affidavits. Affidavits shall be provided by the Company, the architectural and engineering firm and the engineer-of-record that the plant design is in compliance with the following:

(i) The design conforms to NFPA 59A, 1975, in all respects not covered herein.

(ii) Construction is in accordance with the New York City Building Code, Chapter 1 of Title 27 of the Administrative Code, and any applicable Board of Standards and Appeals Resolution.

(iii) All compressed gas vessels (air, nitrogen, etc.) shall conform to Subchapter 17 of Chapter 4 of Title 27 of the Administrative Code and any applicable resolution of the Board of Standards and Appeals.

(iv) All refrigeration equipment shall conform to the requirements of Chapter 1 of Title 27 of the

Administrative (Building) Code, with the provision that where mixtures of flammable gases or liquids not listed therein are used as refrigerants, approval from a nationally recognized testing laboratory shall be submitted with a request for acceptance. Refrigerant vessels shall conform to the ASME code and refrigerant piping, fittings and relief devices shall conform to ANSI B31.5 or ANSI B31.8.

(v) All pipe joints shall be welded by certified welders and radiographed. Certifications of welders and welds shall be filed with the Fire Department.

(vi) Electrical lighting, wiring, equipment and devices conform to the New York City Electrical Code, Chapter 3 of Title 27 of the Administrative Code.

(vii) LNG storage tank is to be protected against lightning in accordance with the New York City Electrical (Administrative) Code and NFPA-78.

(viii) All materials are suitable for the temperature and pressure involved.

(ix) All equipment and devices (including LNG pumps) are of approved type (approved by the Board of Standards and Appeals or other acceptable nationally recognized testing organization, such as Underwriters Laboratories, Factory Mutual, Factory Insurance Association, U.S. Coast Guard, etc.).

(x) Lubricating oil tanks shall conform to the requirements of Chapter 1 of Title 27 of the Building (Administrative) Code, and the regulations of the Fire Department.

(xi) Color-coding of piping systems shall meet the requirements of the Fire Department.

(7) Construction and plant start-up phase data. The following data is required by the Fire Department to assure that all construction meets the requirements for safe operation and that trained personnel and adequate

procedures are available for plant operation. No permit for start-up operations shall be given until these are complied with.

(i) Test data. The results of operational, hydrostatic and pneumatic test shall be submitted in the form of test charts and/or reports signed and dated by the company representatives and Fire Department representative witnessing the tests.

(ii) Construction approvals and affidavits. Evidence of Approval and Affidavits shall be provided by the resident engineer that all construction has been accomplished in accordance with the design requirements stated in § 23-03(u)(6).

(iii) Data required prior to cooldown and start-up (debugging stage).

(A) A survey of the plant by a licensed surveyor shall be filed with the Fire Department showing the location of the LNG tanks, all equipment and buildings and indicating that all distance and topographical requirements have been complied with.

(B) Evidence of approval by the Department of [Ports and Trade] Small Business Services or Department of Buildings, whichever has jurisdiction, shall be submitted to the Fire Department showing that the LNG tanks, berms and dikes have been constructed according to approved plans and the requirements of all agencies having authority and jurisdiction. Supporting affidavits shall be submitted by the owner, the engineer-of-record, and the contractors stating that the tanks have been so constructed and are suitable and safe for the purpose intended.

(C) An affidavit shall be submitted by the owner and the engineer-of-record that all requirements of the Fire Department and

any other regulatory agency have been complied with.

(D) At least two responsible employees on each shift shall obtain certificates of fitness from the Fire Department to supervise the operation of the facility. Such employees shall be selected on the basis of knowledge and experience in LNG plant operation, and fire protection systems, refrigeration systems, processing, maintenance and repair, and transfer operations.

(8) Operations phase data requirements. The following data is required prior to approval for the initial operating permit by the Fire Department and as applicable for renewal.

(i) Permit. An annual Fire Department permit shall be obtained, the fee to be in accordance with § 27-4027 of the Administrative Code.

(ii) As-built approved plans. The Fire Department shall be provided with a copy of the as-built approved plans which shall include:

(A) Plot plans

(B) Tank plans

(C) Process area plot plan

(D) Fire protection systems plans showing yard hydrants and mains, dry chemical, water deluge, sprinklers, foam systems, water supplies, pumps, combustible gas detection systems and other alarm systems, underground piping, channels, conduits, ducts or sewers.

(E) Plans showing structural features

(F) As-built survey

(G) Radiation and vapor dispersion studies

(iii) Reports

(A) A semi-monthly progress report shall be submitted to the Fire Department by the engineer-of-record after the start of operations indicating the status of the plant, any deviations from normal operations, incidents, malfunctions, etc.

(B) A quarterly report shall be submitted to the Fire Department by the owner and engineer-of-record indicating alterations and changes at the plant and the reasons therefor, malfunctions and the reasons therefor, and an instrumentation study and analysis. The semi-monthly reports shall be continued until the Fire Department is satisfied that they are no longer necessary.

(iv) Operating data and test.

(A) An affidavit shall be submitted indicating maximum density of LNG to be stored.

(B) A program shall be submitted for the periodic Charpy testing of samples immersed in the LNG as required by § 23-03(s)(2)(ii).

(C) Procedures shall be submitted for acceptance of all purging operations. Such procedures shall be incorporated in the operating manual.

* * *

(x) References

ACI—American Concrete Institute

514-59 Recommended practice for Measuring, Mixing and Placing of Concrete

525-63 Minimum Requirements for Thin-Section Precast Concrete Construction

318.71 Building Code Requirements for Reinforced Concrete, with Modifications under BS&A, Cal. No. 239-72BCR

506-66 Recommended Practice for Shotcreting
ACI Committee Report 344—Design and Construction of Circular Prestressed Concrete Structures
311-64 Recommended Practice for Concrete Inspection

ANSI—American National Standard Code for Pressure Piping (American Society of Mechanical Engineers)
B-31.3 Petroleum Refinery Piping—1966
B-31.5 Refrigeration Piping Systems—1967
B-31-8 Gas Transmission and Distribution Piping Systems—1968

API—American Petroleum Institute-
620 Recommended Rules for Design and Construction of Large, Welded, Low-Pressure Storage Tanks
App. Q Low-Pressure Storage Tanks for Liquefied Natural Gas—July 1973
1104 Standard for Welding Pipelines—1968
6D Standard for Pipeline Valves—1968

ASME—American Society of Mechanical Engineers
Boiler and Pressure Vessel Code
Section VIII—Unfired Pressure Vessels—1971
Section IX—Qualification of Welders—1971
MSS-SP-6 Manufacturers Standardization Society of the Valve and Fitting Industry - Standard Practice—1963

NFPA—National Fire Protection Association—Standards—
11A High Expansion Foam Systems—1970
17 Dry Chemical Systems—1972
37 Installation and Use of Stationary Combustion Engines and Gas Turbines—1970
59A Production, Storage, and Handling of Liquefied Natural Gas—1975
68 Guide for Explosion Venting—1974
69 Guide for Explosion Prevention Systems—1973
78 Lightning Protection Code—1968
306 Control of Gas Hazards on Vessels—1972

§ 4833-01 Storage of Explosives and Special Effects in Pre-Existing Facilities

(a) Scope. This section consolidates the New York City Fire Prevention Code and former Fire Department rules in effect on June 30, 2008, that are applicable to the design and installation of *explosive* installations in *pre-existing facilities*.

(b) Definitions. Reserved

(c) General Provisions. *Pre-existing facilities* for storage of *explosives* the design and installation of which would not be allowed or approved under the Fire Code, but which, pursuant to FC102.3 and R102-01, may be continued with respect to such *explosive* and *specials effect* material installations under the applicable laws, rules and regulations in effect prior to the Fire Code, shall continue to comply with the provisions of such laws, rules and regulations, including former Administrative Code §27-4213, and former Fire Department *rule* 3 RCNY §14-04, until such time as such *facilities* may be required to comply with the Fire Code and the *rules* with respect to their design and installation.

(d) Explosive Storage

(1) Former Fire Department Rule 3 RCNY §14-04

§14-04 Specifications for Explosive Magazines

All magazines shall be constructed in accordance with the following specifications * * *.

(a) Hinges. Magazine door hinges are to be extra heavy 10-inch galvanized tee hinges, minimum gauge 148 with brass pins. Hinges are to be attached with five 5/16 round head through bolts, two bolts in hinge pad, three bolts in hinge wing.

(b) Hasp. Hasp is to be made of steel bar 1/2 inch by 2 inch, 18 inch minimum length, fastened to magazine door, center with five 5/16-inch round head through bolts on six-inch centers. Hasp bar is to be slotted to accommodate 1/2-inch "I" bolt lock loop.

All lock staples are to be replaced with 1/2-inch "I" bolt, through bolted into magazine wall.

* * *

All exposed bolts inside of magazine are to be counter sunk or wood covered.

(e) Television Special Effects

(1) Former Administrative Code §27-4213

§27-4213 Television special effects

a The provisions of this section shall apply to the [use, storage, maintenance and transportation] <u>storage and use</u> of television special effects in connection with television programs.

b. Definitions. For the purposes of this section:

1. The term "television studio" shall mean any place in a building from which television broadcasts are made or rehearsed and which contains television equipment, scenery or properties, fixtures or other special equipment used for production of television broadcasts whether or not the use of motion picture film is an integral part and with or without seating area for an audience. A television studio may include, but shall not be limited to, front and rear screen projection, film recording, kinescope recording, cutting and editing rooms, developing, screening and viewing rooms, storage rooms and telecine rooms. The televising of special events, such as news, sports, conventions, or special events of a generally similar nature in any place or building shall not constitute such place or building a television studio.

2. The term "television special effect" shall mean any of the materials listed in subdivision c of this section and, in addition, any item, material or property of an explosive, flammable, combustible or dangerous nature approved by the commissioner as a television special effect.

3. The term "flash compound" shall mean a chemical mixture with a burning rate and gas producing pressure rate of lesser degree than commercial photographers' flash powder.

4. The term "flash producing paper" shall mean a paper partially nitrated or treated with mixed acids and treated with a retardant to diminish its rate of burning.

5. The term "flash producing cotton" shall mean ordinary cotton partially nitrated.

6. The term "matches" shall mean matches, other than safety matches, of a type approved by the commissioner.

7. The term "television spark producing device" shall mean a wood stick about one-eighth inch in diameter and seven and one-half inches long dipped to an extent of about four

and one-half inches. Each stick shall hold either about five grams of a binder mixture, iron filings, aluminum and barium nitrate, or about two grams of a binder mixture, aluminum, barium nitrate and potassium perchlorate.

8. The term "toy pistol caps" shall mean toy pistol caps made and packed in compliance with the requirements of the federal department of transportation.

9. The term "electric ignitors" shall mean a type approved by the commissioner, and shall contain a compressed powdered metal and an electrical bridge device with a chemical igniting compound of pressed powder with a small amount of oxidiser not exceeding five grains surrounding the bridge.

10. The term "safety fuse or quick match" shall mean a fuse of a type approved by the commissioner, and shall consist of a very fine core of powder surrounded by wound paper and/or yarn tape and pitch in such a manner so that the fuse will burn progressively.

* * *

12. The term "approved carrying case" shall mean a container clearly marked "TV special effects" and conforming to the following specifications: Container shall be constructed of .070 inch vulcanized fibre, with fibre sections formed under heat, riveted together and all exposed edges banded with metal edging. The exterior corners on the cover and bottom shall be fitted with metal corner reinforcing pieces, and the construction shall conform to standards and practices of fibre case manufacture. The inside dimensions shall be sixteen inches long, eight inches deep and six inches wide, with variances of one-half inch. Such container shall be fitted with two or more spring loaded hinges, capable of effecting a tight closure and exert enough pressure to prevent the cover remaining in open position when released. The closure pressure of the combined hinges shall not exceed ten (10) pounds. The cover shall close freely without any binding action with spacers placed under the lower half of the spring hinge. The inside top panel of the cover shall be lined with one-eighth inch asbestos held in place with a fire resisting adhesive. A

fibre panel covering approximately three-fourths inch of the asbestos around the inside perimeter of the cover shall be riveted to the inside of the cover as a fireproof gasket between the cover and the four top edges of the box body. Apertures of four inches by four inches shall be placed at each end and fitted with flame repellant wire mesh barriers, so constructed as to allow a one-half inch separation between the two panels of twenty mesh wire screen, and such screens shall be of stainless steel, cadmium plated copper or brass mesh. The barrier assemblies shall be secured with 6/32 roundhead machine screws, so constructed as to permit removal of mesh for cleaning or replacement. The carrying strap shall be one inch woven webbing attached to the ends of container by free floating "D" rings; the strap shall be capable of supporting a carrying weight of thirty pounds. No varnish, paint, or treatment of any kind shall be applied to the fibre or asbestos portions of container.

13. The term "central storage" shall mean the storage of television special effects in a room which conforms to the following specifications: Such room shall be enclosed by noncombustible partitions having a minimum fire resistive rating of at least a one hour, and a roof having a fire resistive rating of at least a one and one-half hours, and shall be used for no other purpose. The location of such storage room shall be approved by the commissioner, and shall not be located below street level. Door openings shall be provided with self-closing fireproof doors, having at least a one hour fire resistive rating, and marked "Central storage--television special effects," in letters not less than four inches high. Such rooms shall be adequately ventilated to the outer air, with thin glass windows having an area of at least one-half square inch per cubic foot of room capacity. [and] There shall be a distance of at least fifty feet from any window in such rooms to any window or other building opening [exposed thereby and not in the same plane and giving] on a different wall of the same building or on another building, and a distance of at least twenty-five feet from any window in such rooms to any fire escape on the same [or higher level, and] wall. Such rooms shall be provided with one sprinkler head for each eighty square feet of floor space. Metal racks shall be provided for the storage of containers, and all compressed gases shall be stored in an upright position. Such rooms shall be constructed

only on fireproof floors having a minimum fire resistive rating of at least one and one-half hours and adequate to sustain the proposed loads, or shall be constructed directly on the ground. Where there are practical difficulties in conforming strictly to the provisions herein, the commissioner may vary or modify such provisions to such extent as such commissioner may deem necessary [in] for the premises consistent with public safety.

14. The term "centrally stored" shall mean stored in a place of central storage as defined in paragraph thirteen of this subdivision.

c. The following materials are approved as television special effects and, notwithstanding any other provisions of the code, but subject only to compliance with the provisions of this section, may be centrally stored[, and/or may be maintained, stored] and used in television studios* * *:

1. Flash compound

(a) A maximum of thirty-six ounces may be centrally stored with not more than two ounces in any federal department of transportation approved container and with all such containers kept in approved carrying cases.

(b) A maximum of four ounces may be [maintained] stored for use, with not more than sixty grains in any plastic vial or any federal department of transportation approved container and with all such vials or containers kept in approved carrying cases.

2. Flash producing paper

(a) A maximum of one hundred square feet may be centrally stored with all such material enclosed in metal foil or other material approved by the commissioner and all kept in approved carrying cases.

(b) A maximum of twenty square feet may be [maintained] stored for use when enclosed in metal foil or other material approved by the

commissioner and kept in approved carrying cases.

3. Flash producing cotton

(a) A maximum of two ounces may be centrally stored with not more than one-half ounce in a plastic container and all such plastic containers kept in approved carrying cases.

(b) A maximum of one-half ounce may be [maintained] stored for use, with all such material in a plastic container and such plastic container or containers kept in approved carrying cases.

4. Volatile flammable oils and flammable mixtures

(a) A maximum of five gallons of each may be centrally stored in safety cans of a type approved by the commissioner.

(b) A maximum of one gallon of each may be [maintained] stored for use in safety cans of a type approved by the commissioner.

5. Acetylene gas

(a) Not more than twenty-four cylinders not exceeding one hundred forty cubic inch capacity each approved by the federal department of transportation may be centrally stored.

(b) A maximum of six such cylinders may be [maintained] stored for use.

6. Household gas

(a) A maximum of twelve cylinders not exceeding five hundred cubic inch capacity each, approved by the federal department of transportation, may be centrally stored.

(b) A maximum of six such cylinders may be [maintained] stored for use.

7. Propane gas

(a) A maximum of six propane cylinders, interstate commerce commission designation no. 4B240 or equivalent, not exceeding twenty pounds capacity each, may be centrally stored.

(b) A maximum of two such cylinders may be [maintained] stored for use.

8. Butane gas

(a) A maximum of twenty-four cylinders not exceeding thirty cubic inch capacity each, by the federal department of transportation, may be centrally stored.

(b) A maximum of six such cylinders may be [maintained] stored for use.

* * *

10. Matches

(a) A maximum of one thousand matches may be centrally stored in one or more approved carrying cases.

(b) A maximum of fifty matches may be [maintained,] stored for use[,] in approved carrying cases.

11. Spark producing device

(a) A maximum of one hundred forty-four such sticks may be centrally stored in separate hardened fibre boxes, all contained in approved carrying cases.

(b) A maximum of thirty-six such sticks may be [maintained,] stored for use[,] in hardened fibre boxes all contained in approved carrying cases.

12. Toy pistol caps

(a) A maximum of two thousand five hundred such caps in approved carrying cases may be centrally stored.

(b) A maximum of five hundred such caps may be [maintained,] <u>stored</u> for use[,] in approved carrying cases.

13. Electric ignitors

(a) A maximum of four hundred such ignitors may be centrally stored in approved carrying cases.

(b) A maximum of one hundred fifty such ignitors may be [maintained,] <u>stored</u> for use[,] in approved carrying cases.

14. Safety fuse or quick match

(a) A maximum of two hundred feet of each type may be centrally stored with not more than two hundred feet of either type or combination of the two types kept in approved carrying cases.

(b) A maximum of twenty feet of each type may be [maintained,] <u>stored</u> for use[,] with not more than twenty feet of either type or combination of the two kept in approved carrying cases.

15. Blank cartridges. A maximum of one hundred boxes of such cartridges, in approved carrying cases, may be centrally stored [or maintained] for use.

16. Slow burning smoke producing compound

(a) A maximum of twelve pounds may be centrally stored in approved carrying cases.

(b) A maximum of two pounds may be [maintained,] <u>stored</u> for use[,] in approved carrying cases.

* * *

g. Television special effects in quantities, as provided in subdivision c of this section may be [maintained] <u>stored</u> for use[,] in cabinets in television studios provided such television special effects are contained in approved carrying cases, when required in subdivision c of this section, and stored in cabinets at such location in the studio as may be approved by the

commissioner, in no event to be below street level and in accordance with the following:

1. Said location in theatre type television studios shall be as far as practicable from the audience area and in all other television studios are far as practicable from the performing area.

2. Cabinets shall be clearly marked "TV special effects" and be constructed either of one-fourth inch asbestos board on a framework of one and one-fourth by one and one-fourth by one and one-eighth inch angles or shall be made of 18 United States gauge metal double walled with one and one-half inch air space. Racks or shelves shall be of metal so arranged that cylinders of compressed gas shall be secured in an upright position.

3. Doors shall be so arranged as to remain normally closed and shall be provided with catches at three points.

4. Cabinets shall be provided with a vent to the outside of building. Vent shall have a minimum area of one-half square inch per cubic foot of cabinet capacity.

5. Vent flues inside of building shall be of a construction equivalent to 18 United States gauge metal, covered with one inch of heat insulating material.

6. Each cabinet shall be provided with an automatic sprinkler connected to an adequate source of water supply.

§ 4834-01 Storage of Flammable and Combustible Liquids in Pre-Existing Facilities

(a) Scope. This section consolidates the New York City Fire Prevention Code and former Fire Department rules in effect on June 30, 2008, that are applicable to the design and installation of *flammable* and *combustible liquid* installations in *pre-existing facilities*.

(b) Definitions. The following terms shall, for purposes of this section and as used elsewhere in Chapter 48 of the rules, have the meanings shown herein:

Apartment. An apartment, as defined in subdivision fifteen of section four of the multiple dwelling law. (Fire Prevention Code, former Administrative Code §27-4002(1a))

Bulk oil storage plant. A building, shed, enclosure or premises, or any portion thereof, in which petroleum or coal tar, or the liquid products thereof, are stored or kept for sale in large quantities. (Fire Prevention Code, former Administrative Code §27-4002(31))

Combustible mixture. A liquid or mixture having a closed-cup flashpoint at or above a temperature of one hundred degrees Fahrenheit, except that, for purposes of transportation, a combustible mixture shall mean a liquid or mixture defined as a combustible liquid by the United States Department of Transportation. (Fire Prevention Code, former Administrative Code §27-4002(10))

Diesel fuel oil. Any liquid, used as a motor fuel which does not emit a flammable vapor below a temperature of one hundred degrees Fahrenheit when tested in a Tagliabue open cup tester. (Fire Prevention Code, former Administrative Code §27-4002(10b))

Flammable mixture. A liquid or mixture having a closed-cup flashpoint at a temperature below one hundred degrees Fahrenheit, except that, for purposes of transportation, a flammable mixture shall mean a liquid or mixture defined as a flammable liquid by the United States Department of Transportation. (Fire Prevention Code, former Administrative Code §27-4002(22))

Essential oil. An oil used for flavoring or perfuming purposes. (Fire Prevention Code, former Administrative Code §27-4002(13))

Fire retarding material. Asbestos board in two layers, each one-fourth inch in thickness, the second layer breaking joints in all directions with the first, or plaster boards cocoa fibre filled, covered with lap jointed metal not less than 26 B. & S. gauge in thickness, and any other material that has successfully passed the one hour fire test prescribed by the industrial board of appeals of the state labor department on the twenty-ninth day of October, nineteen hundred fourteen. (Fire Prevention Code, former Administrative Code §27-4002(16))

Fuel oil. Any liquid mixture, substance or compound, derived from petroleum, which does not emit a flammable vapor below a temperature of one hundred twenty-five degrees Fahrenheit, when tested in a Tagliabue open cup tester. (Fire Prevention Code, former Administrative Code §27-4002(18))

Garage. A building, shed or enclosure, or any portion thereof, in which a motor vehicle other than one the fuel storage tank of which is empty, is stored, housed or kept. (Fire Prevention Code, former Administrative Code §27-4002(19))

Kerosene. Any liquid product of petroleum, commonly used for illuminating purposes, which does not emit a flammable vapor below a temperature of one hundred degrees Fahrenheit, when tested in a Tagliabue open cup tester. (Fire Prevention Code, former Administrative Code §27-4002(23))

Motor fuel. Gasoline, diesel fuel oil or other flammable or combustible liquids or mixtures used as fuel in the operation of motor vehicles, motorcycles, motor boats and aircraft. (Fire Prevention Code, former Administrative Code §27-4002(26a))

Oil and fat or fat and oil. Any oil, fat or grease, of animal, vegetable or mineral origin, except essential oils. (Fire Prevention Code, former Administrative Code §27-4002(29))

Vault. A covered excavation or chamber, below the street level, with masonry walls and roof, constructed outside the foundation walls of a building, and with but one entrance, fitted with a self-closing fireproof door. (Fire Prevention Code, former Administrative Code §27-4002(42))

Volatile flammable oil. Any oil or liquid that will generate a flammable vapor at a temperature below one hundred degrees Fahrenheit when tested in a Tagliabue open cup tester. (Fire Prevention Code, former Administrative Code §27-4002(43))

(c) General Provisions. *Pre-existing facilities* with *flammable* and *combustible liquid* installations the design and installation of which would not be allowed or approved under the Fire Code, but which, pursuant to FC102.3 and R102-01, may be continued with respect to such *flammable* and *combustible liquid* installations under the applicable laws, rules and regulations in effect prior to the Fire Code, shall continue to comply with the provisions of such laws, rules and regulations, including former Administrative Code §§27-4053, 27-4055, 27-4065, 27-4066, 27-4069, 27-4070, 27-4094, 27-4227, 27-4231 and 27-4265, and former Fire Department *rules* 3 RCNY §§8-01, 8-02, 20-07, 21-05, 21-06, 21-17, 28-01 and 28-04, as applicable, until such time as such *facilities* may be required to comply with the Fire Code and the *rules* with respect to their design and installation.

(d) Flammable Liquid Manufacture, Storage and Use

(1) Former Administrative Code §27-4065

§27-4065 Manufacture

* * *

b. Restrictions. No permit for the manufacture of flammable mixtures shall be issued for any building:

1. Which is situated within fifty feet of the nearest wall of any building occupied as a school, hospital, theatre or other place of public amusement or assembly;

2. Where the building does not comply with the requirements of the building code regulating high hazard occupancies for buildings erected after the sixth day of

December, nineteen hundred sixty-eight; or where a building or building section erected prior thereto is not fully equipped with an approved automatic sprinkler system; or where the building is occupied as a multiple dwelling, dwelling, school, theatre or other place of public amusement or assembly;

3. Which is artificially lighted by any means other than electricity;

4. Where drugs, cigars, cigarettes or tobaccos are kept for sale;

5. Where dry goods or other materials of a highly flammable nature are manufactured, stored or sold;

6. Where matches, rosin, hemp, cotton or any explosives are stored [as] <u>or</u> sold.

* * *

e. Drawing-off pipe. The drawing-off pipe shall be encased in and surrounded by either four inches of Portland cement concrete or eight inches of brick masonry up to the level of the floor on which the compartment containing the mixing tank is located.

f. Filling pipes. The filling pipe shall be at least two inches and not larger than four inches nominal inside diameter, and shall be laid at a descending grade to the tank, terminating within six inches of the bottom of the tank. The intake of a filling pipe shall be located outside of any building and not less than ten feet from any door, subway grating or basement opening, and in a heavy metal box, which shall be sunk flush with the sidewalk at the curb level, or at some other location offering equal facilities for the filling of the tank and fitted with a heavy metal cover, which shall be liquid tight and kept closed when not in use. The filling pipe shall be closed at the intake by a cock or valve fitted with a coupling for attaching to the tank truck, and with a liquid tight cap or plug to close the opening when not in use. The filling pipe shall be provided with a screen made of one thickness of 20-mesh brass wire gauze, placed immediately below the filling cock or valve. Where a storage system for flammable liquids and a storage system for diesel motor fuel oil and/or fuel oil are to be used on the same premises, the terminal of the diesel motor fuel oil and/or fuel oil fill pipe shall be provided with a left handed thread and the fill pipe fitting shall be of a different size than that

required for the fill pipe to tanks containing flammable liquids. In lieu of the foregoing, fill boxes may be of a type for which a certificate of approval shall have been issued by the commissioner or previously approved by the board of standards and appeals, unless such approval is amended or repealed by the commissioner, and shall have cast in its cover an identifying name or symbol to differentiate between fuel oil for heating and diesel oil as motor fuel.

g. Lighting. It shall be unlawful to install any system of artificial lighting other than electric lighting in any premises used for the manufacture of flammable mixtures. Such lighting shall be installed in accordance with the requirements of the electrical code. All electric switches and plugs shall be placed at least four feet above the floor.

h. Mixing tank. The mixing tank shall be located in a separate compartment built upon suitable foundations, having the walls, floor and roof constructed of Portland cement at least six inches thick, or of brick masonry, at least two inches thick, the brick to be laid in and covered by Portland cement mortar. Each such tank shall be filled either by means of a pump or an approved pressure system, and the tank shall be kept closed except when the ingredients entering into the manufacture of the flammable mixture are being placed therein. Each compartment wherein a mixing tank is located shall be equipped with self-closing fireproof doors and windows.

i. Piping, generally. Each storage tank shall be provided with a filling pipe, a drawing-off pipe and a vent pipe; provided that tanks installed as part of a hydraulic storage system shall not be required to have a vent pipe. All pipes and fittings shall be of galvanized steel, designed to withstand a hydrostatic pressure test of at least one hundred pounds to the square inch. All screw joints shall be made with a piping compound of a type for which a certificate of approval shall have been issued by the commissioner or previously approved by the board of standards and appeals, unless such approval is amended or repealed by the commissioner. In lieu of galvanized steel fittings, galvanized malleable iron fittings, with one hundred and fifty p.s.i. rating, may be used on any system that is provided with a leak detection system satisfactory to the fire commissioner such as probe holes, leak detection cables or other devices installed around the perimeter of the tank installation, designed for monitoring and that will be subjected to a hydraulic pressure test with water or product at ten p.s.i. in the presence of a fire department

representative, every ten years. Brass trimmed specialty valves and brass control valves may be used in underground service lines and portions of suction lines within pump housing.

* * *

m. Tanks.[Each tank used for the storage of volatile flammable oil shall be:]

1. [Of] Each tank used for the storage of volatile flammable oil shall have a capacity not exceeding four thousand gallons [each] when equipped with a double complete shell or when embedded or encased in twelve inches of concrete to the level of the top of the tanks.[and in no case shall storage] Storage on a premises, including all tanks, shall not be in excess of twenty thousand gallons. [, and tanks] Tanks shall be of a type acceptable to the commissioner and constructed of American tank or carbon steel of the open hearth process[, of]. Tanks designed to contain no more than five hundred fifty gallons shall be at least one-quarter of an inch in thickness.[for tanks not exceeding five hundred fifty gallons and for tanks] Tanks designed to contain over five hundred fifty gallons shall be at least one quarter of an inch in thickness for shell and five-sixteenths of an inch in thickness for heads, all welded with flanged and dished heads, with two inch lap weld with no tank openings piercing seams and all tank openings shall be provided at the top.[; at] At the time of installation all storage tanks shall bear a permanently affixed plate, spot welded or equivalent, having the name of tank manufacturer, the thickness of metal and capacity of tank. In lieu of the foregoing tank specifications, other tank construction acceptable to the commissioner may be permitted consistent with public safety, and before being covered or used together with all piping shall be tested hydrostatically to a pressure of thirty pounds per square inch, except discharge lines under pressure shall be tested to one hundred pounds per square inch or one and one-half times the maximum working pressure, whichever is greater, for a period of thirty minutes by the installer,[in the presence of and witnessed by a representative of the fire department,] and shall not show any leakage. Such testing shall be conducted in the presence of a representative of the department.

2. [Thoroughly] Each tank used for the storage of volatile flammable oil shall be thoroughly cleaned and coated on the outside with two coats of red lead and with hot tar, asphalt or other rust resisting material, except that tanks equipped with a double complete shell shall be protected against corrosion to the satisfaction of the department and have a leak-detecting device acceptable to the commissioner[, and]. Each tank shall be set on a solid foundation approved by the department of buildings and except for double shell tanks shall be embedded or encased to the level of the top of the tank in at least twelve inches of concrete, having a minimum compressive strength of twenty-five hundred pounds per square inch at twenty-eight days. [Tanks] Each tank shall be covered with a structurally supported reinforced concrete slab at least eight inches thick extending at least twelve inches beyond the horizontal outlines of the tanks and placed over a coverage of clean sand or clean earth fill, the slab and its supports to be of a design as approved by the department of buildings. Excavation for storage tanks shall be made with due care to avoid undermining of foundations of existing structures.

3. [So set] Each tank used for the storage of volatile flammable oil shall be set so that the top or highest point thereof shall be at least two feet below the level of the lowest cellar floor of any building within a radius of ten feet from the tank[, and no]. No tank used for the storage of volatile flammable oil shall be located under the sidewalk or beyond the building line.

4. It shall be unlawful to cover from sight any tank, forming part of the buried oil storage system, until after an inspection has been made by the department, and written approval has been given; which approval shall be given without charge provided all the regulations have been complied with.

5. [Provided] When a tank used for the storage of volatile flammable oil is located inside a building it shall be provided with a liquid level or depth indicating device[when the tank is located inside a building]. Test wells will not be permitted in tanks located inside of buildings. Liquid level or depth indicating devices [,]installed after this section takes effect[,] shall be substantially constructed and designed to prevent the escape of liquid

or vapor and shall be of a type for which a certificate of approval shall have been issued by the commissioner or previously approved by the board of standards and appeals, unless such approval is amended or repealed by the commissioner. Unused tank openings shall be permanently sealed at the tank to prevent removal of plugs or covers.

n. Vent pipe. In other than hydraulic systems each tank shall be provided with a separate vent pipe[; vent]. Vent pipes for tanks not exceeding five hundred fifty gallons shall be at least one inch in diameter for existing installations and at least one and one-half inches in diameter for new vent pipe installations[, and]. Vent pipes for tanks over five hundred fifty gallons shall be not less than two inches in diameter[for tanks over five hundred fifty gallons, and]. Vent pipes shall run from the tank to the outer air at a position higher than the fill pipe opening[, and]. Vent pipes for tanks located outside of buildings and for vents affixed to a building wall at least ten feet for existing installations and at least fifteen feet for new installations above the adjacent ground level, and for tanks inside buildings at least ten feet above the roof of the building in which the plant or tank is located, and shall be at least ten feet from the nearest building opening, and well braced in position. Each vent pipe shall have a double[,] swing joint at the tank and a single swing joint at the vertical riser[and when such]. When a vent pipe exceeds two inches in diameter it shall be capped with a double gooseneck, cowl, or hood, and shall be provided with either a screen made of two thicknesses of 20-mesh brass wire gauze, placed immediately below the gooseneck, cowl or hood or [provided with] a flame arrestor of a type approved by a nationally recognized laboratory. A vent pipe shall not be obstructed by devices that will reduce [their] its capacity and thus cause excessive back pressure.

o. Ventilating flue. Each compartment wherein a mixing tank is located shall be equipped with a ventilating flue, constructed of brick or concrete, lined with tile pipe at least eight inches square, inside measurement, and extending from the floor of the compartment at a point opposite the door, to at least six feet above the highest point of the roof, and at least ten feet from the nearest wall of any adjoining building. Such flue shall have an opening into the mixing compartment six inches square and three inches above the floor, and shall be equipped with a double gooseneck eight inches square, made of at least 18-gauge galvanized iron. All openings shall be covered with 20-mesh brass wire screens.

p. Fire prevention. It shall be unlawful to allow any stove, forge, torch or other device employing flame or fire, or any electric or other apparatus which is likely to produce an exposed spark, in any building used for the manufacture of flammable mixtures, unless it be placed in a room or compartment separated from the remainder of the building by a partition constructed of fire retarding material and provided with a self-closing fireproof door; provided, however, that electric motors may be of the fully enclosed type or provided with an approved type "A" (fire department specifications) motor enclosure. The terminal blocks also shall be protected. It shall be unlawful to locate any boiler or furnace in any such building, unless separated from the remainder of the building by an unpierced fireproof wall consisting of solid masonry or its equivalent, of at least eight inches in thickness; provided, however, that where the construction of such unpierced wall shall be impracticable, the commissioner may permit such openings in such wall as may be necessary, and prescribe such protection therefor as in his or her judgment the particular case shall require. * * *

r. Installation of pumps. The installation of pumps shall conform to paragraphs three and six of subdivision b of section 27-4081 of this chapter insofar as applicable.

(2) Former Administrative Code §27-4066

§27-4066 Requirements for below-grade storage in mercantile occupancies

A system of automatic sprinklers shall be provided in each basement, cellar or other location below grade, regardless of the floor area of such space, in any mercantile establishment in which the commissioner permits the storage of flammable mixtures, except that, where flammable mixtures are stored in such basement, cellar or other location below grade, in a room or other area that is segregated, vertically and horizontally, from surrounding spaces by a fire separation of not less than a two-hour fire-resistance rating, such system of automatic sprinklers shall be required only within such room or other area. Such system of automatic sprinklers shall conform to the requirements for automatic sprinklers for spaces classified in storage occupancy group B-1 pursuant to subdivision d of section 27-954 of the building code.

(3) Former Administrative Code §27-4265

§27-4265 Fire extinguishing appliances

* * *

b. Sprinkler systems in garment factories and factories using flammable oil for processing:

1. A one source automatic wet pipe sprinkler system shall be provided in every non-fireproof building in which there is a garment factory or a factory engaged in the processing of combustible fabrics with a flammable oil, and which exceeds three stories in height and in which more than fifty persons are employed above the street floor.

2. The provisions of subdivision a shall not apply to a factory which is incidental to the conduct of a retail business on the premises, provided not more than six persons are employed at any time in such incidental manufacturing.

3. For the purposes of this section, a flammable oil is one which emits a flammable vapor below one hundred twenty-five degrees Fahrenheit when tested in a Tagliabue open cup tester.

4. Garment factory shall include those factories engaged in making underwear, dresses, suits and coats.

5. The commissioner may accept an automatic dry pipe sprinkler system in place of an automatic wet pipe sprinkler system where low temperatures or other conditions would prevent the installation of a wet pipe system.

6. The sprinkler systems shall be provided in all parts of such buildings.

7. The provisions of this section shall apply to existing buildings and to buildings hereafter erected.

* * *

(e) Combustible Liquid Manufacture and Storage

(1) Former Administrative Code §27-4069

§27-4069 Manufacture

a. Restriction. No such permit shall be issued for the manufacturing of combustible mixtures in any building within the restrictions of subdivision b of section 27-4065 of this chapter of the code.

(2) Former Administrative Code §27-4070

§27-4070 Requirements for below-grade storage in mercantile occupancies

A system of automatic sprinklers shall be provided in each basement, cellar or other location below grade, regardless of the floor area of such space, in any mercantile establishment in which the commissioner permits the storage of combustible mixtures, except that, where combustible mixtures are stored in such basement, cellar or other location below grade, in a room or other area that is segregated, vertically and horizontally, from surrounding spaces by a fire separation of not less than a two-hour fire-resistance rating, such system of automatic sprinklers shall be required only within such room or other area. Such system of automatic sprinklers shall conform to the requirements for automatic sprinklers for spaces classified in storage occupancy group B-1 pursuant to subdivision d of section 27-954 of the building code.

(f) Distilled Liquors and Alcohols

(1) Former Administrative Code §27-4227

§27-4227 Restrictions

a. No permit shall be issued for the manufacture, distillation, rectification, or storage of distilled liquor, spirits or alcohols, in quantities exceeding the amounts set forth in subdivision b of this section, in any building:

1. Which is situated within fifty feet of the nearest wall of any building occupied as a hospital, school, theatre or other place of public amusement or assembly;

2. Where the occupancy within the building in which the distilled liquor, spirits or alcohols are manufactured, distilled, rectified or stored does not comply with the requirements of the building code regulating high hazard occupancies for

buildings erected after the sixth day of December, nineteen hundred sixty-eight; or where [a] such occupancy is located in a building [or building section] erected prior thereto and such occupancy is not fully equipped with an approved automatic sprinkler system.

b. The provisions of subdivision a of this section shall apply where the combined total amount of distilled liquor, spirits or alcohols being manufactured, distilled, rectified or stored exceeds:

1. 5,000 gallons, if such distilled liquor, spirits or alcohols is kept stored in the manufacturer's original sealed containers, and is not dispensed or used on the premises.

2. 3,000 gallons, if such distilled liquor, spirits or alcohols is dispensed or used on the premises.

(g) Petroleum, Shale Oils and the Liquid Products thereof

(1) Former Administrative Code §27-4055

§27-4055 Limited Storage Permit

a. Permits may be issued for the storage of petroleum and shale oil, and the liquid products thereof, and of coal tar, in a manner satisfactory to the commissioner, in buildings or premises other than storage plants, approved tank trucks or other vehicles, or approved buried tank systems, in quantities not to exceed the following:

1. Volatile flammable oils five hundred fifty gallons, except that such oils may be stored in larger quantities in fire department approved tank trucks or other vehicles, pending deliveries, in outdoor spaces, when permitted by the zoning resolution, when provided with portable fire fighting appliances as the commissioner may direct, or, when such trucks or other vehicles are equipped with battery cutoff switches, within fully sprinklered buildings complying with the building code and the zoning resolution of the city of New York.

2. Other oils that do not emit a flammable vapor at a temperature below one hundred degrees Fahrenheit, when tested in a Tagliabue open cup tester--one thousand one

hundred gallons, except that such oils may be stored in larger quantities in fire department approved tank trucks or other vehicles, pending deliveries, in outdoor spaces or within buildings complying with the zoning resolution and the building code, when provided with the following minimum fire protection:

i. In outdoor spaces portable fire fighting appliances as the commissioner may direct.

ii. Within buildings portable fire fighting appliances as the commissioner may direct, battery cutoff switches, and sprinkler protection as required by the building code, except that for existing buildings lawfully occupied as a garage prior to the sixth of December, nineteen hundred sixty-eight, sprinkler protection shall be provided for storage of over forty-five thousand (45,000) gallons, and sprinkler protection, or smoke detection or thermostatic alarm system with connection to central office, shall be provided for storage of between twenty-two thousand five hundred (22,500) and forty-five thousand (45,000) gallons, all in accord with subdivision (a) of section 27-243, subdivisions (a) and (b) of section 27-455, subchapter seventeen of chapter one of this title and reference standard RS 17-3 of the code. For storage of less than twenty-two thousand five hundred (22,500) gallons--portable fire fighting appliances, as the commissioner may direct, shall be provided, in accord with subdivision (c) of section 27-455 of this title of the code. A permit shall be required for storage of product pending delivery except when such storage is on the site of, or in the immediate proximity of, a bulk oil storage plant.

b. Restrictions. No permit shall be issued for the storage or sale of volatile flammable oil in any building:

1. Where the building does not comply with the requirements of the building code regulating high hazard occupancies for buildings erected after the sixth day of December, nineteen hundred sixty-eight; or where a building or building section erected prior thereto is not fully equipped with an approved automatic sprinkler

system; or where the building is occupied as a multiple dwelling, dwelling, school, theatre or other place of public amusement or assembly; except that group one public garages, as defined and classified in the building code shall be permitted. The commissioner may issue a permit for the storage and use of such volatile flammable oil in buildings occupied as schools, colleges, universities, hospitals and/or related facilities, when such oil is required for educational, instructional, clinical, diagnostic, research or testing purposes. Such use and storage shall be in such amounts and under such conditions as the commissioner shall prescribe;

2. Where explosives are stored or kept for sale or use;

3. Where dry goods or other material of a highly flammable nature are manufactured, stored or kept for sale;

4. Where the portion of the building occupied or used for the storage of volatile flammable oil is lighted by any means other than electricity;

5. Upon any floor above the ground floor of a building, except in an approved safety can in quantities of five gallons or less and for use only.

(h) Paints, Varnishes and Lacquers

(1) Former Administrative Code §27-4094

§27-4094 Restrictions

a. No permit for the manufacture, mixing or compounding of paints, varnishes or lacquers shall be issued for any premises:

1. Which are situated within fifty feet of the nearest wall of a building occupied as a school, theatre or other place of public amusement or assembly;

2. Where the building does not comply with the requirements of the building code regulating high hazard occupancies for buildings erected after the sixth day of December, nineteen hundred sixty-eight; or where a building or building section erected prior thereto is not fully equipped with an approved automatic sprinkler system; or where the building is occupied as a multiple

dwelling, dwelling or factory, except where paint is the commodity manufactured in such factory;

3. Which are artificially lighted by any means other than electricity;

4. Where drugs, cigars, cigarettes or tobaccos are kept for sale;

5. Where dry goods or other highly flammable materials are manufactured, stored or kept for sale.

b. A system of automatic sprinklers shall be provided in each basement, cellar or other location below grade, regardless of the floor area of such space, in any mercantile establishment in which the commissioner permits the storage of flammable or combustible paints, varnishes, lacquers or other substances, mixtures or compounds commonly used for painting, varnishing, staining or similar purposes, except that, where such flammable or combustible substances, mixtures or compounds are stored in such basement, cellar or other location below grade, in a room or other area that is segregated, vertically and horizontally, from surrounding spaces by a fire separation of not less than a two-hour fire-resistance rating, such system of automatic sprinklers shall be required only within such room or other area. Such system of automatic sprinklers shall conform to the requirements for automatic sprinklers for spaces classified in storage occupancy group B-1 pursuant to subdivision d of section 27-954 of the building code.

(i) Oils and Fats

(1) Former Administrative Code §27-4231

§27-4231 Restrictions

No permit shall be issued for the storage of oils, fats, greases or soap stock in any building or premises:

1. Which is situated within fifty feet of the nearest wall of any building occupied as a school, hospital, theatre, or any other place of public amusement or assembly;

2. Where the building does not comply with the requirements of the building code regulating high hazard occupancies for buildings erected after the sixth day of

December, nineteen hundred sixty-eight; or where a building or building section erected prior thereto is not fully equipped with an approved automatic sprinkler system; or where the building is occupied as a multiple dwelling, school, theatre or other place of amusement or assembly;

3. Which is not equipped with a fire extinguishing system satisfactory to the commissioner;

4. Where matches or any explosives are stored or kept.

(2) Former Department Rule 3 RCNY §8-01

§8-01 Fire Extinguishing Requirements for the Storage of Fats and Oils

(a) Section 27-4231(3) of the Administrative Code of the City of New York shall be interpreted to mean an approved system of automatic sprinklers when:

Fats and oils are stored in quantities exceeding the equivalent of 100 barrels. In addition, when more than 100 barrels of fats and oils are to be stored in any building occupied in part as a dwelling, that portion of the building occupied by the applicant must be separated from the rest of the building by fireproof walls and floors of at least a three hour rating.

(3) Former Department Rule 3 RCNY §8-02

§8-02 Storage and Use of Cable Oils with a Flashpoint Over 300°F

* * *

(b) Tanks installed for the storage of cable oils exceeding a flashpoint of 300°F, shall be installed in conformity with the fuel oil rules of the Board of Standards and Appeals.

* * *

(j) Bulk Plants and Terminals

(1) Former Administrative Code §27-4053

§27-4053 Bulk oil storage plants

* * *

b. Bulk oil storage

1. Tank construction. All tanks, as to thickness and quality of material, dike wall enclosures, foundations, piping, valves and other related devices or equipment, comprising or forming part of a bulk oil storage plant, shall be designed and constructed in accordance with all applicable provisions of the building code.

2. Tank locations

A. Adjoining properties. The distance between any part of an above ground storage tank and the nearest line of adjoining property which may be built upon, shall be in accordance with the following distance table: (For the purpose of determining nearest line of adjoining property which may be built upon, the width of any abutting public thoroughfare shall be included.)

Tank capacity	Minimum distance
1,000 to12,000 gallons	10 feet
12,001 to30,000 gallons	20 feet
30,001 to50,000 gallons	25 feet
Vertical cylindrical tanks (for storage of oil having a flash point below one hundred (100) degrees Fahrenheit).	
Over 50,000 gallons:	Not less than the greater dimension of height or diameter of tank, except that such distance need not exceed one hundred twenty (120) feet, and in no case closer than twenty-five (25) feet. No such tank shall exceed forty (40) feet in height.
Rectangular tanks (for storage of oil having a flash point below one hundred (100) degrees Fahrenheit).	
Over 50,000 gallons:	Not less than the total of the length and the width of the tank divided by two except that such distance need not exceed one hundred twenty (120) feet, and in no case closer than twenty-five (25) feet. No such tank shall exceed forty (40) feet in height.
Vertical cylindrical tanks (for storage of oil having a flash point of one hundred (100) degrees Fahrenheit or above).	

Over 50,000 gallons:	Not less than one-half (1/2) the greater dimension of height or diameter of tank, except that such distance need not exceed one hundred twenty (120) feet, and in no case closer than twenty-five (25) feet. No such tank shall exceed forty-eight (48) feet in height. However, the commissioner may modify the height limitation to such extent as he or she may deem necessary in the interest of public safety. In no case shall such modification authorize the erection of vertical cylindrical tanks exceeding the height of sixty-four (64) feet.
Rectangular tanks (for storage of oil having a flash point of one hundred (100) degrees Fahrenheit or above).	
Over 50,000 gallons:	Not less than the total of the length and the width of the tank divided by four (4), except that such distance need not exceed one hundred twenty (120) feet, and in no case closer than twenty-five (25) feet. No such tank shall exceed forty (40) feet in height.

* * *

5. Truck loading racks

* * *

B. Each truck loading rack shall be equipped with a remote manually controlled water spray system. Spray nozzles shall be required over each tank truck loading position immediately below the roof beams of the loading rack and installed in a manner to adequately protect the entire loading rack area. At least one remote control valve shall be provided for the control of the water supply for each four loading positions. Piping and fitting shall be so installed that they can be thoroughly drained. An approved pump for such system shall receive water supply from an independent suction tank or direct connection to the city water main. The rated capacity of the pump shall be at least five hundred (500) gallons per minute at one hundred fifty (150) p.s.i.

* * *

(l) Liquid Tank Storage Systems

(1) Former Fire Department Rule 3 RCNY §21-06

§21-06 Safeguards for Filling Above Ground Storage Tanks in Paint Stores

(a) Flammable liquids which flash below 100°F shall be stored in sealed containers which shall not be opened on the premises, or in approved buried storage systems. When tanks cannot be buried, they may be vaulted in masonry at least 8" thick with a 24" access door. The vault is to be provided with mechanical ventilation to the outer air. Tanks are to be approved 275 or 550 gallon capacity. Electrical equipment is to be explosion-proof.

(b) Combustible liquids which flash over 100(degrees)F may be stored in Bowser or similar type above ground tanks which shall not exceed one hundred and ten (110) gallons in capacity.

(c) Fill lines shall terminate at curb in approved type fill boxes with means for locking.

(d) Vent lines shall terminate in the outer air with weatherproof hoods, screened, two (2) feet above the fill terminal and two (2) feet from any building opening. Vent lines shall be visible from fill line terminal.

(e) No other filling method shall be employed.

(f) Pumps shall be of approved type.

(g) A minimum of 64 square inches of fixed ventilation shall be provided for the storage and filling areas.

(h) The boiler room shall be separated from the tank location area by approved masonry.

(i) A fireproof self-closing door and 6" masonry sill to be provided at the opening of the boiler room.

(j) A catch basin shall be provided with a return line to the storage tank. A check valve to prevent escape of vapors shall be installed in the return line.

(k) The number of Bowser or similar type tanks shall not exceed five (5).

* * *

(2) Former Fire Department Rule 3 RCNY §21-17

§21-17 Installation of Storage Tanks and Piping for Liquids Having Flashpoints of 100 Degrees Fahrenheit or Higher Tag[.]liabue Open Cup

* * *

(d)(1) Construction of tanks. All storage tanks shall be designed in accordance with the following provisions:

(i) All storage tanks shall be built of steel plates or sheets, made by the open hearth or basic oxygen process. Such steel shall be free from physical imperfections, and shall be new, in good condition, and free from rust.

(ii) Tanks shall be welded, riveted and caulked, or riveted and welded. Flanges or other pipe connections may be welded. All caulking shall be placed with round nose tools and without damage to the plates. Filler of any kind between plates shall be prohibited.

(iii) Tanks to be buried shall be cleaned and then coated on the outside with two coats of red lead, or equivalent. They shall be further protected by a coating of hot tar, asphalt, or equivalent rust resistive material, applied at the work site. Tanks installed above ground shall be coated with one coat of red lead, or equivalent.

(iv) All buried storage tanks shall be constructed of at least 1/4-inch thick metal and shall be designed to withstand any external loads to which the tank may be subjected.

(v) At the time of installation all storage tanks shall bear a permanently fixed plate, spot welded or equivalent, bearing the name of the tank

manufacturer, the gauge of the materials, and capacity of the tank. Shop fabricated storage tanks shall be installed without structural alteration.

(vi) All openings shall be through the top of the storage tank, except that storage tanks of 275-gallon capacity or less, located above ground but below the lowest story, may be provided with a 3/4-inch opening for gravity discharge and a l-inch opening in the bottom for cleaning and protection against corrosion.

(vii) Above ground tanks outside of buildings shall be electrically grounded in accordance with the requirements for equipment grounding of the Electrical Code of the City of New York.

(2) Construction requirements. Cylindrical tanks, of more than 275 gallon capacity, except vertical tanks above ground outside of buildings:

(i) The thickness of cylindrical tanks, including oval, elongated oval, or round tanks of more than 275-gallon capacity shall be subject to the following requirements:

(A) Tanks 36 inches in diameter and less-at least 1/4-inch shell and 1/4-inch heads.

(B) Tanks 37 to 72 inches in diameter-at least 1/4-inch shell and 5/16-inch heads.

(C) Tanks 73 to 120 inches in diameter-at least 5/16-inch steel and 3/8-inch head.

(D) Tanks over 120 inches in diameter shall be of at least 3/8-inch steel and shall be stiffened by angle rings or equivalent members so as to retain their cylindrical form.

(ii) Dished heads for such tanks shall have a curvature the radius of which is not greater than the diameter of the tank. Dished heads shall be formed with an adequate cylindrical extension rim

to provide a welding or riveting surface. If flat heads are used, they shall be braced in the same manner as described for the bracing of flat sides of rectangular tanks.

(iii) Riveting in single lap seams shall not exceed a pitch as follows:

(A) Shell 1/4-inch thick-5/8-inch diameter rivets, 2 1/4-inch pitch.

(B) Shell 5/16-inch thick-5/8-inch diameter rivets, 2 3/8-inch pitch.

(C) Shell 3/8-inch thick-3/4-inch diameter rivets, 2 1/2-inch pitch.

(3) Rectangular tanks, of more than 275-gallon capacity

(i) Plates for rectangular tanks of more than 275-gallon capacity shall be at least 5/16-inch thick.

(ii) Corners may be made up by bending the plates or by using angles.

(iii) Minimum rivet diameter in seams shall be 5/8-inch and rivets shall be spaced not more than 2 1/4-inch center-to-center.

(iv) All flat surfaces of rectangular tanks shall be braced by structural members or rods.

(v) When structural members are used, the rivet pitch shall not exceed 6 inches.

(vi) All structural members shall be designed in accordance with the requirements of Subchapter 10 of Chapter 1 of Title 27 of the Administrative Code.

(vii) Connections between bracing members and the sides of the tank shall be designed so that the connections will not fail before the member will fail.

(4) All tanks except vertical tanks above ground 275 gallons or less capacity. All storage tanks of 275-gallon capacity or less that are not buried shall have a minimum thickness of shell and head plated of number 10 manufacturer's standard gauge steel plate. Storage tanks of 60-gallon capacity or less shall be similarly constructed but need not be thicker than No. 14 manufacturer's standard gauge.

(5) Vertical storage tanks over 1,000-gallon capacity located outside of building above ground

(i) Vertical tanks located outside of buildings above ground shall be built of steel plates of the quality required for cylindrical tanks.

(ii) The minimum thickness of roof plates shall be 1/8-inch. The thickness of shell plates shall be determined in accordance with the following formula:

$$t = \frac{TE}{PRF}$$

Where: t=thickness of shell plate in inches

P=head pressure at bottom of ring under consideration in p.s.i.

R=radius of shell, in inches

F=factor of safety (taken as 5)

T=tensile strength of plate, in p.s.i. as verified by mill test certificate

E=efficiency of vertical joint in pipe under consideration

E shall in no case be taken greater than 1.00.

Roof plates shall have single lap-riveted or welded water-tight seams, and the roof shall be built to shed water. Bottom plates shall have single lap riveted or welded

seams. Shell plate seams shall be designed to develop the full strength of the plate.

(e)(1) Location of tanks. Inside of building, above ground on the lowest floor

(i) Tank Capacity of 550 gallons or less. Storage tanks having a capacity of 550 gallons or less may be installed above ground on the lowest floor of a building, provided that such tanks are mounted on adequate noncombustible supports, with the tank anchored thereto. No more than 550 gallons of total storage capacity may be installed without protection provided in subparagraph (ii) or (iii) below.

(ii) Tank capacity more than 500 gallons but less than 1,100 gallons. Storage tanks having a capacity of more than 550 gallons but less than 1,100 gallons may be installed above ground on the lowest floor of a building, provided that all portions of such tanks above the floor are completely enclosed with noncombustible construction having at least a 2-hour fire resistance rating. Weep holes l-inch in diameter shall be provided at least every 3 feet along the bottom of the enclosure unless at least 15 inches of clearance, together with access door, is provided between the tank and the enclosure.

(iii) Tank capacity 1,100 gallons or more. Storage tanks having a capacity of 1,100 gallons or more may be installed above ground on the lowest floor of a building, provided that all portions of such tanks above the floor are completely enclosed with non-combustible construction having at least a 3-hour resistance rating. At least 15-inch clearance shall be provided over the tanks and on all sides between the tanks and the enclosure. A noncombustible access door, constructed so as to preserve the integrity of the fire resistive enclosure, shall be installed in the enclosure above the point where the capacity of the enclosure below the door sill would be equal to the capacity of the largest tank installed. When the longest inside dimension of the enclosure

exceeds 35 feet, access doors shall be installed at intervals not exceeding 12 feet. Columns, pipes, or similar obstructions may project into the required 15 inches of space within the enclosure, provided that access door or doors are so arranged that all portions of the enclosure are accessible for servicing.

(iv) Maximum tank size. The capacity of individual storage tanks in no case shall exceed 20,000 gallons.

(2) Inside of buildings, below ground

(i) Storage tanks having a capacity greater than 275 gallons may be buried inside of a building provided that the top of the tank is at least 2 feet below floor level. In lieu of 2 feet of earth over the tank, the tank may be covered by concrete flooring having the same thickness as the basement floor, but not less than 4 inches concrete meeting the requirements of Subchapter 10 of Chapter 1 of Title 27 of the Administrative Code and reinforced with 2-inch by 2-inch mesh of at least No. 20 U.S. Standard Gauge Steel Wire. Tanks shall be placed in firm soil and shall be surrounded by clean sand or well-tamped earth, free from ashes and other corrosive substances, and free from stones that will not pass through a l-inch mesh. When necessary to prevent floating, tanks shall be securely anchored.

(ii) No tank shall be buried within 3 feet of any foundation wall or footing.

(3) Outside of building, below ground

(i) Storage tanks located outside of buildings and below ground, shall be buried with the top of the tank at least 2 feet below ground. Tanks shall be placed in firm soil and shall be surrounded by clean sand or well tamped earth, free from ashes or other corrosive substances, and free from stones that will not pass a l-inch mesh. When necessary to prevent floating, tanks shall be securely anchored.

(ii) No tank shall be buried within 3 feet of any foundation wall or footing.

(4) Outside building, above ground

(i) Storage tanks of a capacity greater than 275 gallons located outside of buildings above ground shall be not less than one and one-quarter (1/4) tank diameters and in no case less than 10 feet from the line of adjoining property, the nearest building or adjacent tank. The minimum clearance between individual tanks located outside of buildings above ground and the line of adjoining property which may be built upon shall be fixed by the following formula:

$$M.C. = 10 + 4 \frac{G\ 275}{5000}$$

Where: M.C. = minimum clearance from nearest surface of tank to adjoining property in feet.

G = capacity of tank, in gallons.

The maximum allowable capacity of tanks for storage of liquids or solvents having a flashpoint of 100 degrees Fahrenheit or higher located outside of building above ground shall be 100,000 gallons.

(ii) Tanks shall be located so as not to obstruct or interfere with any means of egress.

(iii) Each storage tank shall be protected by an embankment or dike. Such protection shall have a capacity at least 1 1/2 times the capacity of the tank so surrounded and shall be at least 4 feet high, but in no case shall the protection be higher than 1/4 the height of the tank when the height of the tank exceeds 16 feet. Embankments or dikes shall be made of earth work with clay core, of masonry, or reinforced concrete or of steel.

Earth work embankments shall be firmly and compactly built of good earth free from stones, vegetable matter, etc., and shall have a flat section of at least 3 feet at the top and slope of at least 1 1/2 to 2 feet on all sides. Concrete, masonry or steel dikes shall be designed so as to confine safely all of the oil in the tank so surrounded. Embankments or dikes shall be continuous and unpierced, and the outside toe shall be located at least 5 feet inside of the property line, and no less than 5 feet from a driveway or parking area.

(5) Tanks located along line of subways

(i) No buried tank shall be placed within 20 feet of the outside line of a subway wall. Where an above ground tank within a building is located within the outer lines of the subway, or within 20 feet of the outside line of the subway wall, such tank shall be placed within a welded steel oil-tight pan of not less than number 18 manufacturer's standard gauge metal suitably reinforced and of capacity to contain the contents of the tank.

(ii) For the purpose of the foregoing requirement, a subway shall be deemed to include any subsurface railroad or rapid transit roadbed.

(f)(1) Installation of piping and tubing

(i) Exposed piping shall be protected against mechanical damage and shall be adequately supported with rigid metal fasteners or hangers. All pipes connected to buried tanks, except test well piping, shall be provided with double swing joints at the tank.

(ii) Only new wrought iron, steel, or brass pipe, or type K or heavier copper tubing shall be used. Metal tubing when used for conveying material shall be adequately protected.

(iii) Overflow pipes, where installed, shall not be smaller in size than the supply pipe.

(iv) Pipe shall be connected with standard fittings and tubing with fittings of listed or approved type all of the same material as the pipe, except that malleable iron fittings may be used with steel pipe. Cast iron fittings shall not be used. All threaded joints and connections shall be made tight with suitable pipe compound. Unions requiring gaskets or packing, right or left couplings and sweat fittings employing solder having a melting point of less than 1,000 F. shall not be used.

(2) Relief valves

(i) Where a shut-off valve is installed in the discharge line from a material pump, a relief valve shall be installed in the discharge line between the pump and the first shut-off valve.

(ii) Relief valves shall be set to discharge at not more than 1 1/2 times the maximum working pressure of the system. The discharge from relief valves shall be returned to the storage tank or to the supply line. There shall be no shut-off valve in the line of relief.

(3) Vent pipes

(i) A vent pipe of iron or steel, without trap, draining to the tank, shall be provided for each storage tank. The lower end of the vent pipe shall not extend more than 1 inch through the top of the storage tank. Cross-connection between a vent pipe and fill pipe is prohibited.

(ii) Where a battery of storage tanks designed to hold identical material is installed, vent pipes may be run into a main header.

(iii) Vent shall be at least 1 1/4 inch in diameter for storage tanks not exceeding 1,100 gallon capacity and at least 2 inches in diameter for storage tanks of 1,100 gallons or more.

(iv) Vent pipes shall be provided with an approved weatherproof hood having a free area of at least

the pipe size area. Vent pipes shall terminate outside the building in a non-hazardous location, at least 2 feet from any building opening and not less than 2 feet nor more than 12 feet above the fill pipe terminal unless otherwise permitted by the Commissioner. If the vent pipe terminal is not visible from the fill pipe terminal location, a one-inch tell-tale line shall be connected to the tank and shall parallel the fill pipe and terminate at the fill terminal with an unthreaded end. Such tell-tale lines shall be provided with a check valve set to prevent flow of surface water to the storage tank.

(4) Fill pipes

(i) Fill pipes shall terminate outside the buildings, with the fill pipe terminal located at or above grade, at least 2 feet from any building opening and 5 feet from any subway grating at or below the level of the pipe terminal. No fill pipe shall be less than 2 inches in diameter.

(ii) Each storage tank shall be provided with a separate fill pipe, except that where a battery of tanks is installed containing identical materials, a common fill and header pipe may be installed.

(iii) Where the top of the storage tank is above the fill pipe terminal, the fill pipe shall be connected to the top of the tank and provided with a shut-off valve and swing check valve both of which shall be located at the fill pipe terminal. However, the shut-off and check valves may be installed in an accessible location inside the building at or below the level of the fill pipe terminal.

(iv) All fill pipe terminals shall be of a type identical to that approved for fuel oil service, and shall be provided with lugs for embedding concrete. In lieu of lugs, a set screw or threads to fasten the terminal to the fill pipe may be used. The outer flange of the fill pipe terminal or the seal cap shall be permanently marked to identify contents. The fill pipe terminal shall be threaded or provided with other equivalent means to receive the seal

cap. The seal cap shall be suitably slotted for receiving an opening wrench, and an oil proof gasket inserted in a groove in the fill pipe terminal shall be provided so as to make the seal cap leak-proof. A strainer shall not be required but, if used, shall be of at least 1/8-inch mesh. Where a storage system for volatile flammable oil and a storage system for liquid flashing at 100 degrees Fahrenheit or higher is to be used in the same premises, the terminal of liquid flashing 100 degrees Fahrenheit or higher storage system shall be provided with a left-headed thread and the fill pipe fitting shall be of a different size than that required for the fill pipes to the tanks containing the volatile flammable oil.

(5) Piping from transfer pump to manufacturing equipment above the lowest floor

(i) The piping from a transfer pump to "manufacturing equipment" at levels above the lowest floor in buildings, the return piping, and vent piping shall comply with the applicable provisions of paragraphs (1), (3) and (4) of this subdivision (f) and shall be enclosed in a shaft constructed of 4 inch concrete or masonry having a 4 inch clearance from all pipe or pipe covering. Provisions shall be made for expansion in piping without the use of expansion joints.

(ii) Where it is necessary to make horizontal offsets in the supply piping and pipe shafts such piping shall be enclosed in a sleeve of other piping of at least number 10 manufacturer's standard gauge steel, two sizes larger and arranged to drain into the shaft. Horizontal piping offsets shall be further enclosed in construction having a 2-hour fire resistance rating.

(iii) A drain pipe shall be installed at the base of shafts enclosing the supply and overflow piping. The pipe shall lead to an open sight drain or to an open sump.

(iv) Pipe lines for manufacturing equipment above the level of the lowest floor shall be seamless steel

pipe of a weight not less than ASA schedule 40 with welded connections.

(v) Pipe shafts shall not be penetrated by or contain other piping or ducts.

(g) Valves and devices to control the flow of materials

(1) Approved leak detectors on discharge piping shall be provided for submerged or remote control pumps.

(2) A clearly identified remote control switch readily accessible, shall be provided on each floor to which material is pumped to shut-off the power to the pump motors.

(3) A visible means shall be provided for each discharge area to indicate when pump is operating.

(4) Pumps shall be of a type approved by Board of Standards and Appeals.

(5) Pressure in storage tanks for the purpose of discharging materials is prohibited.

(h) Material level indicating devices and test wells

(1) All tanks located inside buildings shall be provided with a material level indicating device. Test wells shall be prohibited in tanks located inside of buildings. Unused tank openings shall be permanently sealed to prevent the removal of plugs or cover.

(2) Material level indicating devices shall be designed and constructed of substantial materials so that there can be no leakage of materials or vapor from the material.

(3) Test wells in storage tanks located outside of buildings shall be capped oil tight and kept closed when not in use.

(i) Tests. All piping and storage tanks for materials flashing at 100 degrees Fahrenheit or higher shall be tested hydrostatically in the presence of a Fire Department representative before work is closed in. The hydrostatic pressure shall be maintained until all joints and connections have been visually inspected, for leaks but in no case for less than one-half hour. The minimum pressure for

testing tanks shall be at least 25 pounds per square inch. The piping shall be tested at 1 1/2 times maximum work pressure applicable to that part of the piping system but in no case less than 25 pounds per square inch. For storage systems for materials flashing above 300 degrees Fahrenheit contractor may submit a notarized affidavit attesting to testing of tank and piping as prescribed above, in lieu of the Fire Department witnessed test.

(m) Flammable and Combustible Liquid Storage

(1) Former Fire Department Rule 3 RCNY §20-07

§20-07 Storage and Sale of Acetone and/or Nail Polish Remover

* * *

(b) With regard to the storage and use of raw materials, such as acetone, vegetable and essential oils, the following requirements are applicable:

(1) For 55 gallons or less of acetone:

(i) Metal storage cabinet;

(ii) Cabinet shall be against an outside building wall and remote from possible ignition sources;

(iii) Cabinet to be provided with top and bottom ventilation to outer air.

(2) For quantities exceeding 55 gallons and up to 275 gallons:

(i) Storage room. Storage room shall be separated or cut off from remainder of premises by, at least, a 1 1/2 hour fire retardant partition. Floor and ceiling should be of non-combustible construction and designed with sufficient strength and customary safety factors and sustain maximum imposed loads. * * *

(ii) The storage room shall be provided with a suitable extinguishing system. This equipment may be of the foam or CO2 type.

(iii) Ample ventilation to outer air shall be provided in storage room.

(iv) All lights, switches and other electrical apparatus shall be of the explosion proof type.

(v) Heat, if required, shall be by indirect means, hot water or steam coils to be located either at ceiling or at walls above maximum drum height. No open flame devices shall be allowed in room or near communicating opening.

* * *

(xii) All electrical equipment, in or near the workroom or laboratory room, where acetone is used, shall be of the explosion proof type.* * *

(xiii) All machinery shall be properly grounded.

* * *

(xvi) Fixed ventilation (natural or mechanical) shall be provided in room where acetone is used.

Note 1. When the quantity of acetone exceeds 275 gallons, a buried storage system shall be required.

* * *

3. Not more than one drum of acetone shall be allowed in a frame building.

* * *

(2) Former Fire Department Rule 3 RCNY §21-05

§21-05 Storage and Sale of Flammable and/or Volatile Flammable Oils in Retail Paint Stores

In buildings other than those with dwelling facilities where not more than fifteen (15) persons congregate, the quantity of such liquids, flammable mixtures and/or volatile flammable oils, shall be limited to 55 gallons above ground, or in an approved underground tank when the amount exceeds 55 gallons.

In buildings used for a place of assembly or licensed place of public assembly, or in buildings where more than fifteen (15) persons congregate above the paint store occupancy, the quantity of such liquids shall be limited to five (5) gallons above ground in a safety can, or in an approved underground tank when the amount exceeds five (5) gallons.

* * *

(3) Former Fire Department Rule 3 RCNY §28-01

§28-01 Storage of Paints, Varnishes and Lacquers, and Similar Products in Multiple Dwellings

* * *

(b) No volatile flammable oils shall be stored.

(c) Paints, varnishes, enamels and all similar materials used for painting or coating, having a flashpoint, shall be stored in storage rooms of fireproof construction. No such storage shall be permitted in basement, cellar or sub-cellar areas of non-fireproof buildings, except in such areas which have heretofore been approved by the fire commissioner.

Storage rooms in basement or cellar occupancies having a door leading to the outer air with a maximum distance of twenty-five (25) feet from the paint room door to such door to the outer air and easily accessible by ramp or stairway to grade, may be permitted in class I fireproof buildings.

(d) The storage room shall be provided with either natural ventilation or an independent duct leading to the outer air. The ventilation shall not terminate in an enclosed court nor within twenty (20) feet of any building opening. Motors of ventilating system shall be explosion proof. Automatic sprinklers shall be provided for the storage room. Sprinklers may be connected to the house supply.

(e) The door to the paint storage room shall be fireproof and self closing. A masonry or concrete sill at least six (6) inches above the floor shall be provided at the door opening. Door shall be kept securely locked when room is not in actual use.

* * *

(g) No portable electrical appliances of any kind shall be used in the storage room.

(h) All globes shall be of the vaporproof type. The electric light switch shall be located outside of the room.

(i) The door to the room shall be marked "Paint Storage Room - No Smoking" in RED letters at least 4" high.

* * *

(o) The total quantity of paint material shall not exceed two hundred (200) gallons in non-fireproof multiple dwellings, except where storage in a separate fireproof exterior building.

In class I fireproof multiple dwellings, or complexes of contiguous multiple dwellings under the same ownership, two (2) gallons per apartment, but not more than two thousand (2,000) gallons storage may be permitted provided that, when storage exceeds two hundred (200) gallons, the automatic sprinkler system required for the storage room is extra hazard spacing and piping, with a fire department siamese connection, that the room is on an outside wall of the building, and that explosion venting is provided. Explosion venting provided shall be a minimum of ten (10) square feet when less than twenty (20) gallons of material having a flashpoint of under 100(degrees)F. Tag. o.c. is stored, and in accordance with NFPA Standard No. 68 (1954) when twenty (20) gallons or more of low flash material under 100 degrees F. Tag. o.c. flash) are stored. (These are in addition to all other requirements specified in these regulations).

(p) All thinning of such paints, etc. shall be prepared in said storage areas.

(q) All such paints, when not in actual use, shall be returned to said approved storage areas. All paint products shall be transported in closed containers.

(r) No spraying or dipping with such paints, etc. may be performed except as provided for in the rules of the Board of Standards and Appeals.

* * *

(4) Former Fire Department Rule 3 RCNY §28-04

§28-04 Storage and/or Use of Inks

* * *

Printing inks and lithographic inks having a flashpoint below 100°F are to be within the purview of paints, varnishes, lacquers, as to permit requirements and restrictions.

Apply paint spray rules of the Board of Standards and Appeals, 2 RCNY §18-0l(f)(1)(i)-(iii) for storage facilities.

Grounding and lighting shall be in accordance with the electrical code of the Bureau of Electrical Control. * * *

Adequate means of either mechanical or natural ventilation shall be provided.

No open flames unless printing machine is equipped with an exhaust hood and mechanical vent of at least one hundred (100) linear feet per minute is provided.

* * *

§ 4835-01 Storage of Flammable Gases in Pre-Existing Facilities

(a) Scope. This section consolidates the *Fire Prevention Code* and former Fire Department *rules* in effect on June 30, 2008, that are applicable to the design and installation of *flammable gas* installations in *pre-existing facilities*.

(b) Definitions. Reserved

(c) Ethylene Oxide. The design and installation of ethylene oxide systems used for sterilization purposes in compliance with former Fire Department *rule* 3 RCNY §23-08 in effect on June 30, 2008 are allowed and would be approved under the provisions of the Fire Code and the *rules*, and accordingly, such *facilities* shall be designed and installed in compliance with the requirements of FC3506.

(d) Compressed Natural Gas. The design and installation of *compressed natural gas* storage facilities in compliance with former Fire Department *rule* 3 RCNY §23-12 are allowed and would be approved under the provisions of the Fire Code and the *rules*, and accordingly, such facilities shall be designed and installed in compliance with the requirements of FC3507 and R3507-01, except that *pre-existing CNG* storage facilities with reduced clearance distances shall be continued in compliance with the provisions of the former Fire Department *rule* 3 RCNY §23-12(g) and (i) with respect to clearance

distances until such time as such *facilities* may be required to comply with the Fire Code and the *rules* with respect to their design and installation.

(1) Former Fire Department Rule 3 RCNY §23-12(g)(4)(i) and (i)(7)

§23-12 Storage and Use of Compressed Natural Gas

(g) Outdoor CNG container storage facilities.

* * *

(4) No outdoor CNG storage facility shall be located within:

(i) five (5) feet of any building opening, including any door, openable window, intake or exhaust vent;

* * *

(i) Stationary CNG installations.

* * *

(7) No CNG container connected for use shall be located within:

(i) five (5) feet of any building opening, including any door, openable window or intake or exhaust vent;

(ii) five (5) feet of the nearest lot line, sidewalk or building on an adjoining lot * * *;

(iii) five (5) feet of any parked motor vehicle;

(iv) five (5) feet of any vent or fill line of any flammable or combustible liquid storage tank;

(e) Acetylene *Pre-existing* acetylene storage facilities the design and installation of which would not be allowed or approved under the Fire Code, but which, pursuant to FC102.3 and R102-01, may be continued under the applicable laws, rules and regulations in effect prior to the Fire Code, shall continue to comply with the provisions of such laws, rules and regulations, including former Administrative Code §27-4101, until such time as such *facilities* may be required to comply with the Fire Code and the *rules* with respect to their design and installation.

(1) Former Administrative Code §27-4101

§27-4101 Acetylene

a. Approval of generator. It shall be unlawful to generate acetylene, except in a generator or other suitable apparatus of a type for which a certificate of approval shall have been issued; provided, however, that nothing contained in this section shall be construed as requiring a certificate of approval for an acetylene generator having a carbide capacity not exceeding five pounds.

b. Containing building. Each building or compartment used for the generation and compression of acetylene, to a pressure greater than fifteen pounds to the square inch, shall be designed and constructed in accordance with all applicable provisions of the building code, and shall be used for no other purpose.

c. Stationary apparatus. Each stationary apparatus for generating acetylene shall be equipped with liquid seals, a safety valve, a blowoff valve or other automatic appliance for limiting the pressure of the gas to not more than fifteen pounds to the square inch at a temperature of seventy degrees Fahrenheit. The apparatus shall be installed in a waterproof compartment having the floor, walls and roof of brick or reinforced concrete. The size of such compartment shall not exceed that required to allow the free operation of the apparatus and the storage of the necessary carbide. Each such apparatus shall bear the name of the manufacturer and the year of its manufacture, and shall be identified by a serial number.

d. Compression. It shall be unlawful to compress acetylene, or transport, store or sell acetylene compressed to a greater than two hundred fifty pounds to the square inch at a temperature of seventy degrees Fahrenheit.

e. Dissolving and absorbing. It shall be unlawful to generate, transport, store or sell acetylene compressed to a pressure greater than fifteen pounds to the square inch, except when it be dissolved in acetone, or other similar solvent, and simultaneously absorbed into asbestos or other suitable porous material, and confined in a tank or cylinder of a type for which a certificate of approval shall have been issued.

f. Liquid. It shall be unlawful to generate, manufacture, transport or sell any liquid acetylene.

g. Residue of carbide. All solid residue of calcium carbide shall be promptly removed from the building and disposed of; and it shall be unlawful to discharge any such residue into a public drain or sewer.

* * *

j. Ventilating, heating and lighting. Each building or compartment used for the generation or compression of acetylene shall be well ventilated, shall be heated only by steam or hot water, and shall be artificially lighted only by electric lights having airtight bulbs, globes or tubes.

* * *

§ 4836-4837 Reserved

§ 4838-01 Storage of Liquefied Petroleum Gases in Pre-Existing Facilities

(a) Scope. This section consolidates the *Fire Prevention Code* and former Fire Department *rules* in effect on June 30, 2008, that are applicable to the design and installation of *pre-existing liquefied petroleum gases* storage facilities.

(b) Definitions. Reserved

(c) Facilities in Compliance With Former Fire Department Rules in Effect on June 30, 2008. LPG storage facilities in compliance with former Fire Department *rule* 3 RCNY §25-01 in effect on June 30, 2008 are allowed and would be approved under the provisions of the Fire Code and the *rules*, and accordingly, such *facilities* shall be designed and installed in compliance with the requirements of FC Chapter 38 and the R3809-01, except that where the storage facility clearance distances from building openings; stationary LPG installations clearance distances from building openings, lot lines, buildings on an adjoining lots, sidewalks, *motor vehicles*, and vent and fill lines of *flammable* or *combustible liquid* storage tanks; and previously exempt storage and use (as set forth in 3 RCNY §25-01(k)); of such outdoor storage facility are lawfully not in compliance with the requirements of such chapter and rule, such *pre-existing conditions* shall be continued in compliance with the provisions of former Fire Department *rule* 3 RCNY §25-01(g), (i) and (k), as applicable, until such time such facilities may be required to comply with the design and installation requirements of the Fire Code and rules with respect to such *conditions*.

(1) Former Fire Department Rule 3 RCNY §25-01(g), (i) and (k)

§25-01 Storage and Use of Liquefied Petroleum Gases

(g) Outdoor storage facilities.

* * *

(4) No outdoor storage facility shall be located within:

(i) five (5) feet of any building opening, including any door, openable window, intake or exhaust vent;

* * *

(i) Stationary LPG installations.

* * *

(7) No LPG container connected for use shall be located within:

(i) five (5) feet of any building opening, including any door, openable window or intake or exhaust vent;

(ii) five (5) feet of the nearest lot line, sidewalk or building on an adjoining lot * * *;

(iii) five (5) feet of any parked *motor vehicle*;

(iv) five (5) feet of any vent or fill line of any flammable or combustible liquid storage tank;

* * *

(k) Pre-existing storage and use.

(1) Exemptions. Subject to the provisions of paragraph (2) of this subdivision, LPG storage and use in or for the following existing facilities and installations shall be maintained and operated in accordance with the original approval conditions and the provisions of this section, except as follows:

(i) The provisions of paragraph (5) of subdivision (f) and paragraph (7) of subdivision (i) of this section shall not apply to any stationary LPG installation that was issued a

Department permit prior to the effective date of this section, including the stationary LPG installations described in paragraph (7) of subdivision (j) and subparagraphs (ii), (iii) and (iv) of this paragraph.

(ii) The provisions of paragraph (5) of subdivision (c) and paragraph (5) of subdivision (i) of this section shall not apply to a LPG container installation in a residential occupancy that was issued a Department permit prior to the effective date of this section.

(iii) The provisions of paragraph (13) of subdivision (c) of this section shall not apply to LPG storage and use for non-residential space heating or water heating when a Department permit for such storage and use was issued prior to the effective date of this section.

(iv) The provisions of paragraphs (8) and (10) of subdivision (c) and paragraph (5) of subdivision (f) of this section shall not apply to a roof-mounted emergency generator installation that was issued a Department permit prior to the effective date of this section.

(v) The provisions of subdivision (g) and paragraph (5) of subdivision (f) of this section shall not apply to an outdoor LPG storage facility that was issued a Department permit prior to the effective date of this section.

(vi) The provisions of item (iii) of paragraph (2) of subdivision (h) and paragraph (4) of subdivision (h) of this section shall not apply to an indoor LPG storage facility that was issued a Department permit prior to the effective date of this section.

(2) Discontinuance of exempt storage and use.

(i) The LPG storage and use authorized by subparagraphs (1)(i), (ii), (iii) and (iv) of this subdivision shall be discontinued and all LPG containers removed from the premises:

(A) by December 31, 2004, if access to natural gas from a public utility is available on the effective date of this rule; or

(B) within five years after access to natural gas from a public utility becomes available, if such access is not available on the effective date of this rule.

(ii) Notwithstanding any other provision of this subdivision, the Department may require any facility or installation granted an exemption by this subdivision to comply with all applicable provisions of this section and may require discontinuance and removal of any facility or installation not in compliance with the provisions of this section, where the Department finds that such facility or installation has been operated contrary to the original approval conditions or poses an undue danger to public safety.

Provisions Referenced in §25-01(k)

(c) General prohibitions.

* * *

(5) store or use in, or bring or allow into, any residential occupancy or on any lot containing a building used for a residential occupancy, any LPG container with a capacity greater than sixteen and four tenths ounces (16.4 oz.), except as provided in subdivision (j) and (k) of this section.

* * *

(8) use on the roof of any building any LPG container with a capacity greater than sixteen and four tenths ounces (16.4 oz.), except as provided in subdivisions (j) and (k) of this section.

* * *

(10) store or use LPG for a stationary installation in any area where access to natural gas from a public utility is available, except as provided in subdivision (k) of this section.

* * *

(13) store or use LPG for space heating or water heating, except as provided in subdivisions (j) and (k) of this section.

* * *

(f) General storage and use.

* * *

(5) Storage and use of LPG in quantities exceeding twenty five hundred (2,500) standard cubic feet of gas (approximately 300 pounds) constitutes a high hazard occupancy as set forth in Article 3 of Subchapter 3 of the New York City Building Code. Any such quantities of LPG shall be stored and used in compliance with the Building Code requirements applicable to high hazard occupancies, except as provided in subdivision (k) of this section.

* * *

(g) Outdoor storage facilities.

(1) Except as otherwise provided in this section, all LPG containers shall be stored outdoors in a facility that conforms to the requirements of this subdivision. All outdoor LPG storage facilities shall be:

(i) not more than fifty four (54) square feet in area;

(ii) protected from vehicle impact;

(iii) protected from theft, tampering or unauthorized use by a metal open fence enclosure at least six (6) feet in height, secured by a locked gate opening outward, or by a lockable ventilated metal locker of a type for which a Certificate of Approval has been issued by the Department. Such fence enclosure or locker shall be mounted on and secured to a substantial concrete pad at grade level, which pad shall be constructed to prevent accumulation of rain and snow;

(iv) located in a well ventilated area. There shall be a minimum clearance of ten (10) feet from any surrounding walls more than eight (8) feet high on at least three sides of the outdoor storage facility;

(v) directly accessible from the street. LPG containers being delivered to or taken from an outdoor storage location shall not be brought into or through any building or other structure; and

(vi) equipped with at least one 10-B-C rated fire extinguisher in a protective enclosure. Such fire extinguisher shall be affixed to the outside of the storage facility or placed at

another readily accessible location not more than thirty (30) feet from the facility.

(2) No more than twenty five hundred (2,500) standard cubic feet of LPG (approximately 300 pounds) shall be stored in an outdoor LPG storage facility.

(3) No outdoor storage facility shall be located on a lot containing any building used for residential purposes.

(4) No outdoor storage facility shall be located within:

(i) five (5) feet of any building opening, including any door, openable window, intake or exhaust vent;

(ii) ten (10) feet of the nearest lot line, sidewalk or building on an adjoining lot, except as follows:

(A) twenty (20) feet of any building of wood frame construction;

(B) fifty (50) feet from any building occupied as a multiple dwelling; and

(C) one hundred (100) feet of the lot line of any property occupied for educational, health care or religious purposes, place of public assembly, or other place of public gathering;

(iii) ten (10) feet of any parked motor vehicle;

(iv) ten (10) feet of any combustible material;

(v) fifteen (15) feet of any vent or fill line of any flammable or combustible liquid storage tank;

(vi) twenty (20) feet of flammable gas storage;

(vii) twenty (20) feet of any aboveground flammable or combustible liquid storage tank; and

(viii) one hundred (100) feet of any subway entrance or exit, vent or other opening.

* * *

(h) Indoor LPG storage.

* * *

(2) All indoor storage of LPG with an individual capacity greater than sixteen and four tenths ounces (16.4 oz.) authorized by this rule shall be stored in a separate room that conforms to the requirements of this subdivision. Any such room shall be:

* * *

(iii) constructed with an access door that opens directly to the outdoors:

* * *

(4) all delivery and pick-up of containers to or from an indoor LPG storage facility shall be through the outdoors access door only, not through the building.

* * *

(i) Stationary LPG installations.

* * *

(5) When LPG is piped indoors, a sign at least ten (10) inches high and fourteen (14) inches wide shall be conspicuously posted at the entrance to the building and shall bear the wording "Danger-LPG Piping".

* * *

(7) No LPG container connected for use shall be located within:

(i) five (5) feet of any building opening, including any door, openable window or intake or exhaust vent;

(ii) five (5) feet of the nearest lot line, sidewalk or building on an adjoining lot, except as follows:

(A) ten (10) feet of any building of wood frame construction;

(B) fifty (50) feet from any building occupied as a multiple dwelling; and

(C) one hundred (100) feet of the lot line of any property occupied for educational, health care or religious purposes, place of public assembly, or other place of public gathering;

(iii) five (5) feet of any parked motor vehicle;

(iv) five (5) feet of any vent or fill line of any flammable or combustible liquid storage tank;

(v) ten (10) feet of any combustible material;

(vi) twenty (20) feet of any flammable gas storage;

(vii) twenty (20) feet of any aboveground flammable or combustible liquid storage tank; and

(viii) one hundred (100) feet of any subway entrance, exit, vent or other opening.

* * *

(j) Special storage and use.

* * *

(7) Commercial establishments. Commercial establishments which store and use LPG for cooking and oil burner ignition shall comply with the following requirements:

(i) LPG storage and use shall be limited to LPG containers with a capacity not greater than 16.4 ounces unless the container is connected for use in a stationary installation.

(ii) All LPG appliances and equipment shall be installed by a plumber licensed by the New York City Department of Buildings.

(iii) Rigid piping shall be used for all connections between LPG appliances and equipment and LPG containers.

(iv) LPG storage and use for the purposes authorized by this paragraph is subject to the prohibition set forth in paragraph (10) of subdivision (c) of this section, and shall

be discontinued in accordance with the provisions of paragraph (2) of subdivision (k) of this section.

* * *

§ 4839-01 Storage of Organic Peroxides in Pre-Existing Facilities

(a) Scope. This section consolidates the New York City Fire Prevention Code and former Fire Department rules in effect on June 30, 2008 that are applicable to the design and installation of *organic peroxide* installations in *pre-existing facilities*.

(b) Definitions. Reserved

(c) General Provisions. *Pre-existing facilities* with *organic peroxide* installations the design and installation of which would not be allowed or approved under the Fire Code, but which, pursuant to FC102.3 and R102-01, may be continued with respect to such *organic peroxide* installations under the applicable laws, rules and regulations in effect prior to the Fire Code, shall continue to comply with the provisions of such laws, rules and regulations, including former Fire Department *rule* 3 RCNY §27-01, until such time as such *facilities* may be required to comply with the Fire Code and the *rules* with respect to the design and installation of such *organic peroxide* installations.

(d) Organic Peroxides

(1) Former Fire Department Rule 3 RCNY §27-01

§27-01 Storage, Sale or Use of Organic Peroxides Packaged for Manufacturing, Industrial or Commercial Uses

* * *

(j) Storage facilities.

* * *

(2) Storage building or space shall be equipped with fast acting deluge type automatic sprinkler system. Roof of storage building shall be of light construction and suitably insulated with non-combustible insulating material. In lieu of light constructed roof, explosion venting may be provided. Ventilation to be provided for preventing excessive temperatures and to remove products of decomposition. Installation shall conform to requirements of Building (Administrative) Code and pertinent Board of Standards and Appeals resolution.

(3) Alarms shall be installed in storage building or space to indicate unsafe temperatures.

§ 4840-4844 Reserved

CHAPTER 49
MISCELLANEOUS

§4900-01 Adjudications
§4900-02 Schedule of Charges for Fire Department Ambulance Transport Service

§ 4900-01 Adjudications

(a) Scope. This section sets forth the *Department's* policy with respect to adjudications.

(b) Definitions. The following term shall, for purposes of this section and as used elsewhere in the *rules*, have the meaning shown herein.

OATH. New York City Office of Administrative Trials and Hearings.

(c) Adjudications. Pursuant to New York City Charter §1043, the *Department* designates OATH as the forum for adjudication of any matters requiring adjudication. The OATH administrative law judge shall submit to the Fire Commissioner the record of the hearing conducted in the matter and a written report of the hearing, including proposed findings of fact and conclusions of law, a recommended decision and, if applicable, a recommended penalty. The Fire Commissioner shall render the final determination of the matter.

§ 4900-02 Schedule of Charges for Fire Department Ambulance Transport Service

(a) Scope. This section sets forth the charges for Fire Department ambulance transport service.

(b) Schedule of Charges. Effective March 17, 2012, the charges for Fire Department ambulance transport service are as follows:

Type of Service	Charge
Basic Life Support Ambulance	$ 704.00

Advanced Life Support Ambulance Service– Level 1 (ALS1)	$ 1,190.00
Advanced Life Support Ambulance Service– Level 2 (ALS2)	$ 1,290.00
Additional Charges:	
– Mileage (distance traveled to hospital)	$ 12.00/mile
– Provision of Oxygen (as applicable)	$ 60.00