807 East 19th Street

Siding

1 Proposed West Elevation
SCALE: 1/4" = 1'-0"

Elevation

2 Exist. West Elevation
SCALE: 1/4" = 1'-0"

Elevation

Boschan
Design,
Architecture

111 John Street, Room 2200
New York, NY 10038
(212) 619-2460

11/12/2019

Alterations to the
Weisel
Residence

807 East 19th Street
Brooklyn, NY

Seal & Signature

DoB Approval Stamp

NYC DoB
Sticker No.

Weisel-807

Exist. & Proposed
Elevations

A-005.00

5 of 10 sheets

1 Proposed East Elevation
SCALE: 1/4" = 1'-0"
Elevation

2 Exist. East Elevation
SCALE: 1/4" = 1'-0"
Elevation

Roschen
Design,
Architecture

111 John Street, Room 2200
New York, NY 10038
(212) 619-2460

11/12/2019

Alterations to the
Weisel
Residence

807 East 19th Street
Brooklyn, NY

Seal & Signature

DoB Approval Stamp

NYC DoB
Sticker No.

Weisel-807

Exist. & Proposed
Elevations

A-006.00

6 of 10 sheets

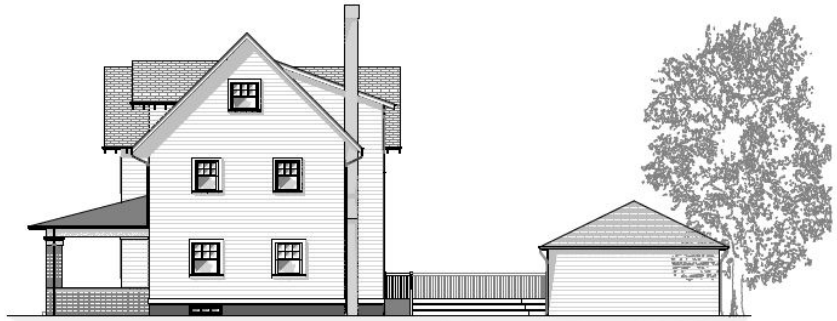

1 Proposed South Elevation
SCALE: 1/4" = 1'-0"
Elevation

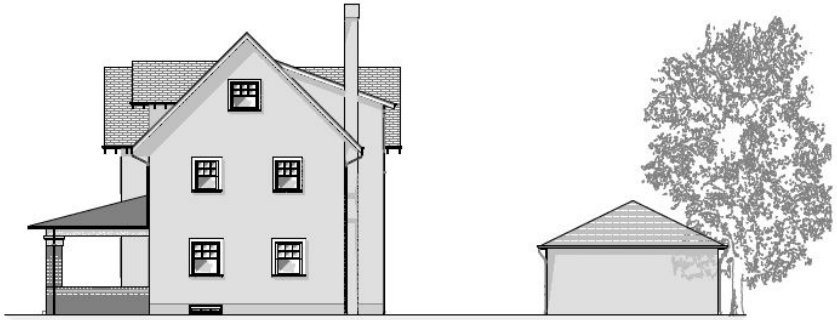

2 Exist. South Elevation
SCALE: 1/4" = 1'-0"
Elevation

Roschen
Design,
Architecture

111 John Street, Room 2200
New York, NY 10038
(212) 619-2460

11/12/2019

Alterations to the
Weisel
Residence

807 East 19th Street
Brooklyn, NY

Seal & Signature

DoB Approval Stamp

NYC DoB
Sticker No.

Weisel-807

Exist. & Proposed
Elevations

A-007.00

7 of 10 sheets

1 Proposed North Elevation
SCALE: 1/4" = 1'-0"

Elevation

2 Exist. North Elevation
SCALE: 1/4" = 1'-0"

Elevation

Boschen
Design,
Architecture

111 John Street, Room 2200
New York, NY 10038
(212) 619-2400

11/12/2019

Alterations to the
Weisel
Residence

807 East 19th Street
Brooklyn, NY

Seal & Signature

DoB Approval Stamp

NYC DoB
Sticker No.

Weisel-807

Exist. & Proposed
Elevations

A-008.00

8 of 10 sheets

PLANK, PANEL, BATTEN AND SHINGLE COLORS

24

TRIM AND SOFFIT COLORS

49 Wellington

62 Waldorf ct

786 East 19th ST

804 East 19th Street

787 E 19th ST
stucco patch

801 E 19
Stucco patch

801 E 19
Stucco
deterioration

1819 Glenwood Rd
Stucco peeling

Windows

807

807

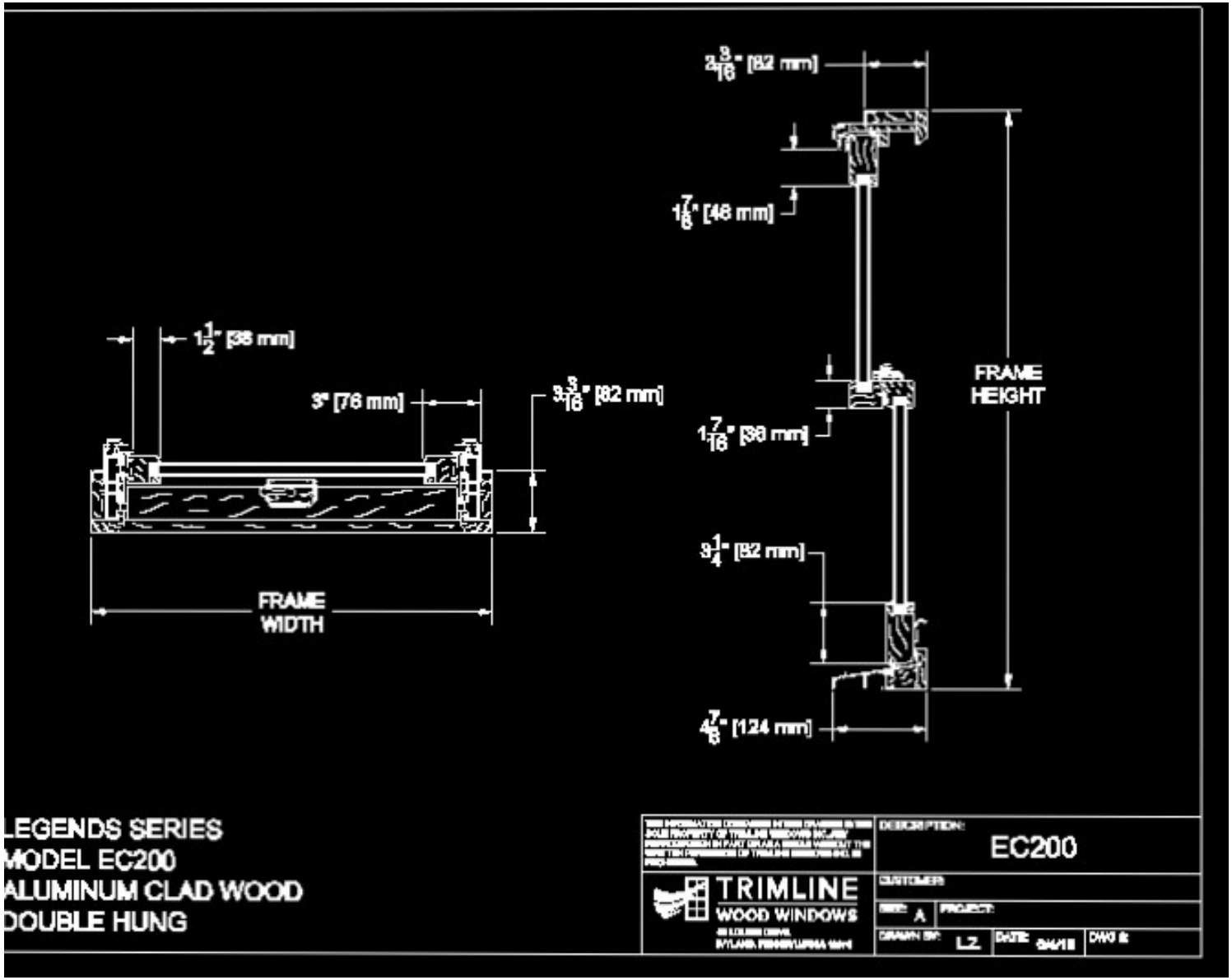
2 3/16" [82 mm]
1 7/8" [48 mm]
1 1/2" [38 mm]
3" [76 mm]
3 3/16" [82 mm]
1 7/16" [36 mm]
FRAME HEIGHT
3 1/4" [82 mm]
FRAME WIDTH
4 7/8" [124 mm]
LEGENDS SERIES
MODEL EC200
ALUMINUM CLAD WOOD
DOUBLE HUNG
TRIMLINE
WOOD WINDOWS
EC200
A
LZ

Balcony

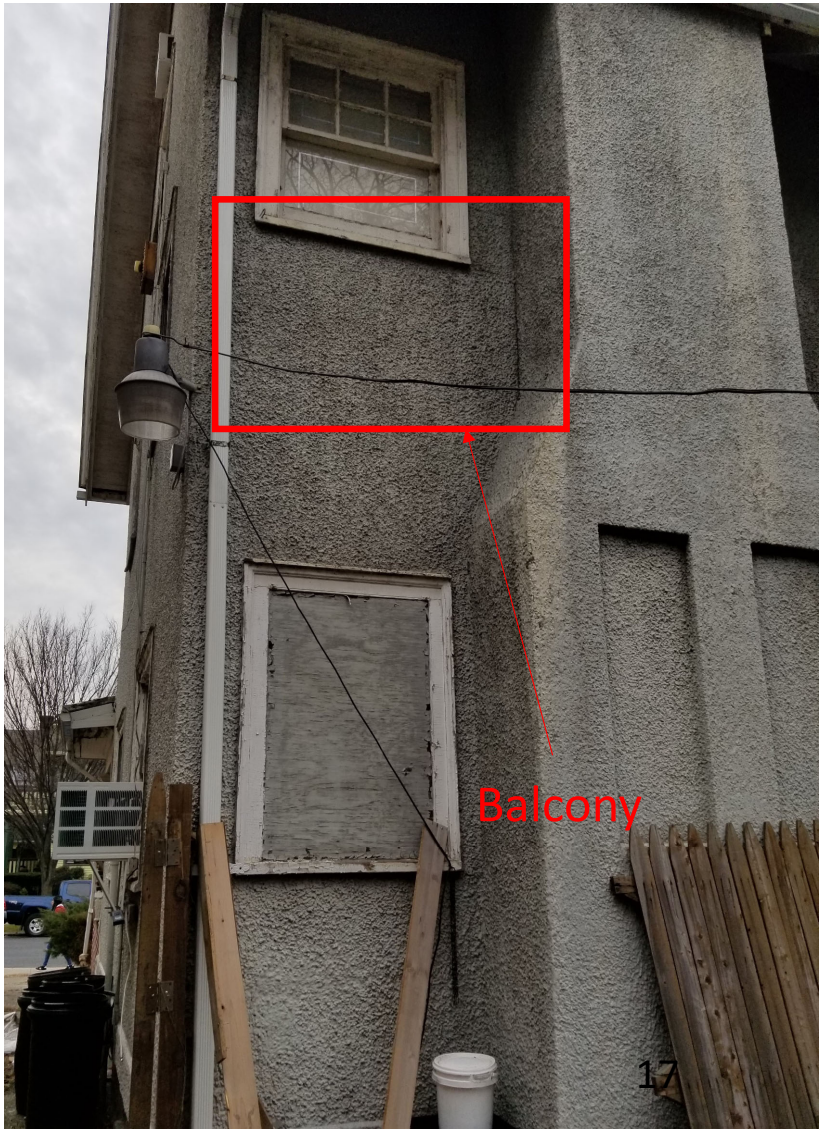

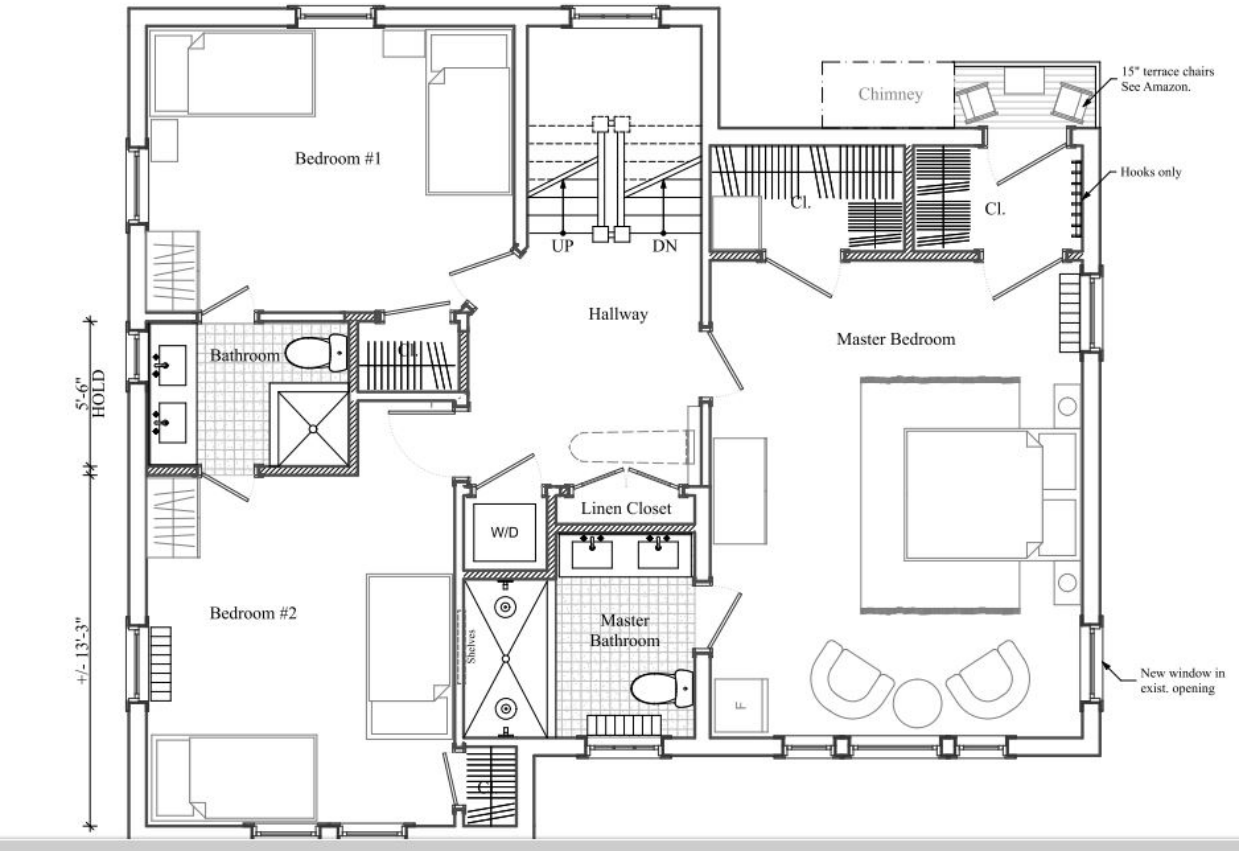

1 Proposed East Elevation
SCALE: 1/4" = 1'-0"
Elevation

2 Exist. East Elevation
SCALE: 1/4" = 1'-0"
Elevation

807